PROPOSED:
CASCADES TRAIL PHASE 1:
Club House Drive to Stone Mill Road

LETTING DATE: September 21, 2011

FOR:

THE CITY OF BLOOMINGTON

BOARD OF PARK COMMISSIONERS

BLOOMINGTON, INDIANA

Brock Ridgway, P.E.
September 1, 2011

EAGLE RIDGE
CIVIL ENGINEERING SERVICES, LLC

1321 Laurel Oak Drive
Avon, IN 46123

CONTENTS

Section I: INVITATION TO BIDDERS

Section II: INSTRUCTIONS TO BIDDERS

Section III: BIDDER'S PROPOSAL, RESPONSIBLE BIDDER AFFIDAVIT, SAMPLE BID BOND

Section IV: AFFIRMATIVE ACTION PLAN REQUIREMENTS

Section V: PREVAILING SCALE OF WAGES

Section VI: STATE FORM NO. 96, NON-COLLUSION AFFIDAVIT

Section VII: GENERAL CONDITIONS

Section VIII: SPECIAL CONDITIONS

Section IX: SAMPLE AGREEMENT

Section X: SPECIFICATIONS

Section XI: GEOTECHNICAL DATA

Section XII: PEDESTRIAN BRIDGE AND ABUTMENTS DESIGN AND SPECIFICATIONS

Section XIII: PERMIT INFORMATION

Section XIV: TRAFFIC SIGNALS AND TRAFFIC SIGNAL MATERIALS (INDOT Recurring Special Provisions 805-T-169 and 922-T-168)

Section XV: LOCAL NOISE PERMIT

SECTION I

INVITATION TO BIDDERS

INVITATION TO BIDDERS

NOTICE IS HEREBY GIVEN THAT THE BOARD OF PARK COMMISSIONERS OF THE CITY OF BLOOMINGTON, INDIANA WILL RECEIVE SEALED BIDS FOR THE BELOW-DESCRIBED WORK AT THE LOCATION INDICATED.

CASCADES TRAIL PHASE 1: CLUB HOUSE DRIVE TO STONE MILL ROAD

The project shall include, but is not limited to, the construction of:

- Approximately 4,500' of 8' wide paved asphalt recreational trail;
- Replacement of all signal poles and equipment at the intersection of Old SR 37/Walnut Street to modernize facilities and to accommodate crosswalks and pedestrian actuation/indicators;
- Construction of a new single-span, steel-truss pedestrian bridge, 90' long with a clear width of 10', including cast in place abutments on driven piles;
- A 25' reinforced concrete box culvert extension with minimum opening size of 8' wide and 2' tall, and a 32'extension of a culvert with a 24" RC Pipe.
- Removal of over 400' of guardrail and installation of 2 Type O.S. End Treatments on existing guardrails.
- Replacement of gates and fencing at the Cascades Softball Fields with new 48" black vinyl coated chain link fence.
- Other miscellaneous and related work include clearing, excavation, borrow, rough and finish grading, topsoiling, mulched seeding; pedestrian safety railings, collapsible bollards, new trail and street signage (both post and signal-mounted), and pavement markings; tree removal, brush clearing and planting of new trees; minor concrete work including curbs, sidewalks and drive; and coordination with utilities.
- Compliance with the terms of permits from IDNR Construction in a Floodway, and IDEM for Erosion Control.

Project is along Old SR 37 from Club House Drive (in Lower Cascades Park) to Stone Mill Road, including the crossing of North Walnut Drive in Bloomington, Indiana.

The proposal and other data submitted will form the basis of the negotiation of a Lump Sum agreement for the work. Proposals are to be submitted in proper form, as described in the "Instructions to Bidders". Sealed proposals shall be received by the Department of Parks and Recreation at Showers City Hall, 401 North Morton Street, Suite 250, Bloomington, Indiana, 47402 at or before **2:00 P.M. local time, on Wednesday, September 21, 2011.** The sealed Bids will be publicly opened and read aloud immediately thereafter in the Parks and Recreation department conference room. Any proposals received after the designated time will be returned unopened. Proposals will be reviewed and the award may be made at a scheduled meeting of the Board of Park Commissioners on September 27, 2011.

The Contract Documents may be obtained online at the following web site:
http://bloomington.in.gov/sections/viewSection.php?section_id=537

Each Bidder shall file with his or her sealed proposal: (1) a properly executed Non-collusion Affidavit as required by the laws of the State of Indiana; (2) a Questionnaire Form 96 of the State Board of Accounts, (3) a cashiers check or certified check drawn on an acceptable bank or a bid bond equal to five (5) percent of the total amount bid.

A pre-bid meeting shall be held at the McCloskey Conference Room located at Showers City Hall, 401 North Morton Street, Bloomington, Indiana on Wednesday, September 14, 2011 at 10:00 am local time. The meeting is not mandatory, but is strongly recommended.

Each Bidder must ensure that to the greatest extent feasible, opportunities for training and employment should be give to lower income residents of the project area and purchases and/or contract for work in connection with the project should be awarded to small business concerns which are located in, or owned in substantial part, by person residing in the area of the project.

Any bidder/quoter seeking to qualify as a "local Indiana business" to gain a preference in the bidding/quoting process pursuant to Indiana Code 5-22-15-20.9 must contact Danise Alano, Director, City of Bloomington Economic and Sustainable Development Department (812-349-3477; alanod@bloomington.in.gov) to obtain information as to the qualification process, applicable rules, and required documentation. When submitting a bid/quote, the bidder/quoter must submit a statement claiming the preference. All information and documentation offered in support of the claim for qualification as a "local Indiana business" must be included in the bidder's/quoter's sealed bid/quote.

The City of Bloomington is an equal opportunity employer, and Bidders shall meet all requirements for equal employment under Title VII of the 1964 Civil Rights Act as amended and under the Bloomington Human Rights Ordinance, as amended.

Each Bidder for proposals over $10,000.00 shall submit and have approved by the City of Bloomington Contract Compliance Officer, Barbara McKinney, their written Affirmative Action Plan at least twenty-four (24) hours prior to the deadline for submission of proposals. Bids received that do not have an approved Affirmative Action Plan will be returned unopened. Each Bidder must insure that all employees and applicants for employment are not discriminated against because of race, religion, color, sex, national origin, ancestry or handicap. All the protected classes must be included in your Affirmative Action Plan for it to be acceptable. In addition to other requirements, your plan MUST include a workforce breakdown, an internal grievance procedure, a non-retaliation statement, designation of a person by name or position who is responsible for implementation of the Plan, applicability to both applicants and employees, recruitment of minorities, equal access to training programs, and an explanation of your method of communicating the operations of your affirmative action plan to employees and prospective applicants. Barbara McKinney, Contract Compliance Officer, may be contacted at (812) 349-3429, 9:00 a.m. to 1:00 p.m. local time Monday through Friday.

Wage rates shall not be less than the common construction wage rates as determined in accordance with IC5-16-7.

The successful Bidder shall furnish performance and payment bonds for one-hundred (100) percent of the contract amount prior to execution of the contract, and said bonds shall remain in effect for a period of one (1) year after final acceptance of the work.

The Board of Park Commissioners reserves the right to waive any informalities and to accept or reject any or all proposals submitted. Bids may be held by the Board for a period not-to-exceed thirty (30) days, from the date of the opening of bids for the purpose of reviewing the bids and investigating the qualifications of the Bidder prior to awarding the contract.

John Carter, President
Board of Park Commissioners
City of Bloomington, Indiana

SECTION II

INSTRUCTIONS TO BIDDERS

INSTRUCTIONS TO BIDDERS

1.00 **CONTRACT DOCUMENTS**: The "Invitation to Bid", "Instructions to Bidders," "Responsible Bidder Affidavit," "Bidders' Proposal", "Agreement", "General Conditions", "Special Conditions", "Specifications", and the "Contract Drawings" are the Contract Documents that will form the Contract.

1.01 **INSPECTION OF THE SITE:** Bidders shall examine each of the Contract Documents, visit the site of the work and thoroughly and fully inform themselves of the construction hazards procedures, labor, conditions and factors, which could affect the prosecution and completion of the work. Such considerations shall include; the conditions of existing structures and facilities which may be affected by the proposed work, the procedure necessary for maintenance of uninterrupted operation of existing facilities, the availability and cost of labor and methods for transporting, handling, and storage of materials and equipment. All such factors shall be properly investigated and considered in the preparation of the Bidder's proposal. There will be no subsequent financial adjustment to any contract for lack of such prior information or its effects on the cost of the work.

1.02 **OMISSIONS AND DISCREPANCIES:** Should Bidders find discrepancies in, or omissions from, the Contract Documents, or should they be in doubt as to their meaning, written notification should be made to the City Engineer. Interpretation of the proposed contract documents will be made only by written addendum. A copy of each addendum will be mailed or delivered to each person obtaining a set of contract documents from the City Engineer. The Owner will not be responsible for any other explanations or interpretations of the proposed contract documents.

2.00 **PROPOSALS:** Pursuant to the "Invitation to Bidders" sealed proposals for performing the work shall be received by Board of Park Commissioners, City of Bloomington Parks and Recreation Department, at Showers City Hall, 401 North Morton Street, Suite 250, Bloomington, Indiana, 47402 at or **before 2:00 p.m. local time on September 21, 2011.** Proposals will be opened and read at 2:00 p.m. by the Parks and Recreation department staff in the department conference room. Any proposals received after the designated time will be returned unopened. Proposals will be reviewed and the award will be made at the September 27, 2011 meeting of the Board of Park Commissioners.

2.01 **PROPOSAL FORM:** Each proposal shall be legibly written or printed in ink on the Bidder's Proposal Form with LumpSum and Supplemental Unit Prices provided. All addenda to the Contract Documents on which a Proposal is based, properly signed by the Bidder, shall accompany the Proposal when submitted. No alteration in any Proposal, or in the Proposal Form on which it is submitted, shall be made by any person after the Proposal has been submitted by the Bidder.

2.02 **PROPOSAL SIGNATURES:** Each Bidder shall sign their proposal using their usual signature and giving their full business address. Bids by partnerships shall be signed with the partnership name followed by the signature and designation of one of the partners or other authorized representative. Bids by corporations shall be signed with the name of the corporation followed by the signature and designation of the president, secretary, or other person authorized to bind the corporation. The names of all persons signing should also be typed or printed below the signature. A bid by a person who affixes to their signature the word "president" or "secretary", "agent", or other designation without disclosing their principal may be held to be the bid of the individual signing. When requested by the Owner, satisfactory evidence of the authority of the person signing shall be furnished. No Bidder may submit more than one Proposal. Two Proposals under different names will not be accepted from one firm or association.

2.03 **PROPOSAL SUBMISSION:** Each Proposal submitted shall be enclosed in a sealed envelope or wrapping, addressed to the Board of Park Commissioners, City of Bloomington Parks and Recreation Department, Showers City Hall, 401 North Morton Street, Suite 250, Bloomington, Indiana, 47402, identified on the outside with the words "SEALED BID", and the name of the project and the project number, and filed with the Operations Director at their office in Suite 250, Showers City Hall at 401 North Morton, Bloomington, Indiana.

2.04 **INDIANA LEGAL REQUIREMENTS:** Each Bidder shall submit under oath with their bid a statement of their experience, proposed plan for performing the Work, equipment available to perform the work, and a financial statement. The statements shall be submitted on Questionnaire Form No. 96 of the Indiana State Board of Accounts. Each Proposal shall be accompanied by a properly executed Non-Collusion Affidavit as required by the laws of the State of Indiana. Each Bidder shall also submit under oath with their bid the "Responsible Bidder Affidavit" as required by Chapter 2.31 of the Bloomington Municipal Code.

2.05 **PROPOSAL GUARANTEE:** Each Proposal shall be accompanied by a cashier's check or a certified check drawn on an acceptable bank, or an acceptable Bidder's bond in an amount of not less than five percent (5%) of the total bid. The proposal guarantee shall be made payable without condition to the City of Bloomington, Indiana, hereinafter referred to as "Owner", and the amount of said Proposal Guarantee may be retained by and forfeited to the Owner as liquidated damages if the Proposal covered thereby is accepted and a contract based thereon is awarded and the Bidder should fail to enter into a contract in the form prescribed, with legally responsible sureties, within fifteen (15) days after such award is made and confirmed by the Owner.

2.06 **RETURN OF PROPOSAL GUARANTEE:** The Proposal Guarantee deposit of each unsuccessful Bidder will be returned when their proposal is rejected. The Proposal Guarantee deposit of the Bidder to whom the Contract is awarded will be returned when the successful Bidder executes a contract and files a satisfactory performance bond. The Proposal Guarantee deposit of the second and third lowest responsible Bidders may be retained for a period not to exceed ninety (90) days pending the execution of the Contract and bond by the successful Bidder.

2.07 **WITHDRAWAL OF PROPOSAL:** No Contractor may withdraw their Proposal for a period of sixty (60) days after the date and hour set for the opening, and the Bidders submitting the three lowest bids may not withdraw their proposals for a period of one-hundred eighty (180) days after the opening date. A Bidder may withdraw their Proposal at any time prior to the expiration of the bid period during which Proposals may be submitted by a written request signed in the same manner and by the same person who signed the Proposal.

2.08 **ACCEPTANCE AND REJECTION OF PROPOSALS:** The Owner reserves the right to accept the proposal submitted by the lowest responsible and responsive Bidder; to reject any or all proposals; and to waive irregularities or informalities in any proposal. Proposals received after the specified time of closing will be returned unopened. The acceptance of a proposal will be a notice in writing signed by a duly authorized representative of the Board of Public Works, and no other act shall constitute acceptance of a proposal. The acceptance of a proposal shall bind the successful Bidder to execute the Contract and to be responsible for liquidated damages as provided in Section 8.00.

3.00 **QUALIFICATION OF BIDDERS:** Bidders shall submit satisfactory evidence that they have a practical knowledge of the particular work bid upon, and that they have the necessary financial resources to complete the proposed work. Each Bidder shall execute completely and accurately Questionnaire Form No. 96 of the Indiana State Board of Accounts and shall file the same with their Proposal. The information contained therein shall be used by the Owner to determine the ability, experience, and capital resources of the Bidder. In determining the Bidder's qualifications, the following factors will be considered: whether the Bidder (a) maintains a permanent place of business; (b) has adequate plant and equipment to do the work properly and expeditiously; (c) has the necessary financial resources to meet all obligations incident to the work; and (d) has appropriate technical experience. Each Bidder may be required to show that

previous work performed has been handled in such a manner that there are no just and proper claims pending against such work. No bid will be accepted which is submitted by a Bidder who is engaged in any work which would impair their ability to finance the work covered by such bid or to provide suitable equipment for its proper prosecution and completion.

4.00 **EXECUTION OF CONTRACT**: Any Bidder whose proposal shall be accepted will be required to appear at the office of the City Engineer in person, or, if a firm or corporation, a duly authorized representative shall so appear, to execute the Contract within 10 days after notice that the Contract has been awarded to them. Failure or neglect to do so shall constitute a breach of the agreement effected by the acceptance of the Proposal. The amount of the Proposal Guarantee accompanying the Proposal of such Bidder shall be retained by the City as liquidated damages for such breach. In the event that any Bidder whose Proposal shall be accepted shall fail or refuse to execute the Contract as hereinbefore provided, the Board of Public Works may at their option, determine that such Bidder has abandoned the Contract and thereupon their Proposal and the acceptance thereof shall be null and void and the Owner shall be entitled to liquidated damages as above provided.

4.01 **INSURANCE:** The Contractor will be required to carry insurance throughout the lifetime of the Contract, as provided in the General Conditions, the amount of insurance of the various types being not less than the amounts specified therein.

4.02 **PAYMENTS:** Payment for all work performed under the proposed contract will be made in cash, or its equivalent, by the Owner within thirty (30) days after completion and final acceptance of the work covered by the contract. Partial estimates will be issued and paid as provided in the General Conditions.

4.03 **TIME FOR BEGINNING AND COMPLETING THE WORK:** The Contractor shall start active and continuous work on the contract within 5 calendar days after the date of the notice to proceed and CONTRACTOR shall achieve Substantial Completion of the work required under this Agreement within seventy-five (75) calender days from the written Notice to Proceed. Substantial Completion shall mean the completion of clearing, rough grading, asphalt and concrete paving, signal installation, bridge and culvert construction. Final Completion shall be achieved within 30 calendar days of substantial completion. Final Completion shall include ALL work under this Agreement including the completion of finish grading and seeding, tree planting, signage and pavement markings, unless, at the Owner's sole discretion, it deems it is the Owner's best interests to waive some completion requirements for better weather.

Calendar and work days shall be as defined in the General Conditions of these documents.

4.04 **TAXES AND PERMITS:** Attention is directed to the requirements of the General Conditions regarding payments of taxes and obtaining permits. The Contractor shall be responsible for obtaining all necessary permits.

4.05 **WORKER'S COMPENSATION:** Before any work is started, the Contractor shall obtain from the Indiana State Industrial Board and file with the Owner, a certificate as evidence of compliance with the provisions of the Indiana Worker's Compensation Act and the Indiana Worker's Occupational Diseases Act..

4.06 **PERFORMANCE BOND:** The Bidder to whom a contract is awarded will be required to furnish a Performance Bond to the Owner in an amount equal to one-hundred (100) percent of the contract price. The bond shall be executed on the form included in the Contract Documents by a surety company authorized to do business in the State of Indiana and acceptable as surety to the Owner. Accompanying the bond shall be a "Power of Attorney" authorizing the attorney-in-fact to bind the surety company and certified to include the date of the bond. The surety on the Performance Bond cannot be released for one year, and the bond must require that the surety will not be discharged for:

A. modifications, omissions, or additions;

B. defects in the contract; or
C. defects in the bidding or awarding process.

4.07 **PAYMENT BOND:** For all contracts a Payment Bond is required to insure payment of subcontractors, laborers, material suppliers, and persons furnishing services. The bond is executed by the Contractor to the state, approved by and for the benefit of the Owner, in an amount equal to the contract price. It is deposited with the board, and its surety cannot be released until one year after the board's final settlement with the Contractor. The bond must provide the same assurances as does the Performance Bond against conditions discharging the surety.

4.08 **LOCAL MATERIALS:** Preference will be given to materials, products, supplies, and all other articles produced, manufactured, made, or grown in the State of Indiana.

4.09 **NON-DISCRIMINATION IN EMPLOYMENT:** Each Bidder for proposals over $10,000.00 shall submit and have approved by the City of Bloomington Contract Compliance Officer, Barbara McKinney, their written Affirmative Action Plan at least twenty-four (24) hours prior to the deadline for submission of proposals. Bids received that do not have an approved Affirmative Action Plan will be returned unopened. Each Bidder must insure that all employees and applicants for employment are not discriminated against because of race, religion, color, sex, national origin, ancestry or handicap. All the protected classes must be included in your Affirmative Action Plan for it to be acceptable. In addition to other requirements, your plan MUST include a workforce breakdown, an internal grievance procedure, a non-retaliation statement, designation of a person by name or position who is responsible for implementation of the Plan, applicability to both applicants and employees, recruitment of minorities, equal access to training programs, and an explanation of your method of communicating the operations of your affirmative action plan to employees and prospective applicants. Barbara McKinney, Contract Compliance Officer, may be contacted at (812) 349-3429, 9:00 a.m. to 1:00 p.m. Monday through Friday. The successful Bidder must comply with each section of its affirmative action plan and be prepared to comply in all respects with the contract provisions regarding non-discrimination which are included in the Employment Requirement and Wage Rate section. For contracts paid in whole or in part with federal funds, the Bidder must submit a signed statement as to whether he or she has previously performed work subject to Executive Order 11246. For contracts paid in whole or in part with federal funds, the successful Bidder must, if requested, submit a list of all subcontractors who will perform work on the project, and written and signed statements from authorized agents of the labor pools with which they will or may deal for employees on the work, together with supporting information to the effect that said labor pools' practices and policies are in conformity with Executive Order 11246, and that said labor pools will affirmatively cooperate in, or offer no hindrance to, recruitment, employment, and equal treatment of employees seeking employment, and performing work under the Contract, or a certification as to what efforts have been made to secure such statements when such agents or labor pools have failed or refused to furnish same, prior to the award of the Contract.

SECTION III

BIDDER'S PROPOSAL
RESPONSIBLE BIDDER AFFIDAVIT
SAMPLE BID BOND

BIDDER'S PROPOSAL

This Bid Summary Sheet shall be completed and submitted with all other Bid Documents.

Pursuant to notices given, the undersigned proposes to furnish all labor, materials, tools, equipment and transportation necessary for **Cascades Trail Phase 1: Club House Drive to Stone Mill Road, in Bloomington, Indiana**, in accordance with plans and specifications prepared by Eagle Ridge Civil Engineering Services, LLC, for the lump sum of:

Base Bid:

The Base Bid is the work as described on the plans, specifications and other contract documents including, but not limited to:

- Approximately 4,500' of 8' wide paved asphalt recreational trail;
- Replacement of all signal poles and equipment at the intersection of Old SR 37/Walnut Street to modernize facilities and to accommodate crosswalks and pedestrian actuation/indicators;
- Construction of a new single-span, steel-truss pedestrian bridge, 90' long with a clear width of 10', including cast in place abutments on driven piles;
- A 25' reinforced concrete box culvert extension with minimum opening size of 8' wide and 2' tall, and a 32'extension of a culvert with a 24" RC Pipe.
- Removal of over 400' of guardrail and installation of 2 Type O.S. End Treatments on existing guardrails.
- Replacement of gates and fencing at the Cascades Softball Fields with new 48" black vinyl coated chain link fence.
- Other miscellaneous and related work include clearing, excavation, borrow, rough and finish grading, topsoiling, mulched seeding; pedestrian safety railings, collapsible bollards, new trail and street signage (both post and signal-mounted), and pavement markings; tree removal, brush clearing and planting of new trees; minor concrete work including curbs, sidewalks and drive; and coordination with utilities.
- Compliance with the terms of permits including IDNR Construction in a Floodway, and IDEM for Erosion Control.

Base Bid work includes, but is not limited to, miscellaneous work that is shown on the plans or specifications, is integral the work described, or is implied by the plans and specifications. <u>It shall ALSO include the following undistributed work:</u>

Undercutting including Common Excavation and Replacement of Unsuitable Materials with Compacted Aggregate #53 Base: 200 CYD
Geogrid (for Base or Undercut Stabilization): 550 SYD

Base Bid shall NOT include work specifically noted as an ALTERNATE work.

LumpSum Base Bid is as follows:

_____

_____$_____
(in words) **(in numerals)**

ALTERNATES:

Alternate 1: LIMESTONE PEDESTALS

The Owner, at its sole discretion, may accept this Alternate to construct four pedestals made of concrete block, brick and limestone as shown in the plans. Alternate 1 work includes, but is not limited to, miscellaneous grading work to shape the area around new pedestals as required. It shall include any tasks and materials related to building these pedestals. If accepted by OWNER, Alternate 1 will be added to the Base Bid price.

(Add) _____ $_____
(written amount) (numerals)

SUPPLEMENTAL UNIT PRICE ITEMS:

In order to provide the OWNER with flexibility in managing the cost implications of adding work to or deducting work from the project, the BIDDER shall provide Unit Costs for the following types of work as listed below:

Description	**Price**	**Unit**
Tree Removal, 6" - 10"		EA
Tree Removal, 12" - 24"		EA
Tree Removal, 26" and Larger		EA
Rock Excavation		CY
Undercut and Replace Subgrade, including Excavation, Replacement with Compacted Aggregate, and Geogrid (for amounts beyond that included in Base Bid)		CY
Curb, Concrete – 20” Bat. Curb w/8” exposed		LF
Sidewalk, Concrete - 4”		SY
Asphalt Trail – including Comp. Agg. Base and HMA layers		SY
Concrete Drive, Class III, including Comp. Agg. Base and 9” Concrete		SY
Concrete Curb Ramp, w/ Cast Iron Tactile Plate		SY
Mulched Seeding		SY
Trees, Min. 2” Caliper, (Any Species noted on plans)		EA
Chain Link Fencing, 48”, Vinyl Coated		LF
Sheet Sign and Post		EA
Pedestrian/Bicycle Safety Railing		LF

- **All prices shall reflect complete installation as shown on the plans or stated in the specifications, and be authorized by an approved change order prior to installation/deletion (All field orders must be issued in writing to be honored).**

CONTRACT TIME:

The Contractor shall start active and continuous work on the contract within 5 calendar days after the date of the notice to proceed and CONTRACTOR shall achieve Substantial Completion of the work required under this Agreement within seventy-five (75) calender days from the written Notice to Proceed. Substantial Completion shall mean the completion of clearing, rough grading, asphalt and concrete paving, signal installation, bridge and culvert construction. Final Completion shall be achieved within 30 calendar days of substantial completion. Final Completion shall include ALL work under this Agreement including the completion of finish grading and seeding, tree planting, signage and pavement markings, unless, at the Owner's sole discretion, it deems it is the Owner's best interests to waive some completion requirements for better weather.

SUBCONTRACTORS / SUPPLIERS:

Any and all Subcontractors or Suppliers to be compensated more than $10,000 shall be listed below:

SUBCONTRACTOR/SUPPLIER	ADDRESS	TYPE OF WORK

BID SECURITY:

Enclosed is a certified check to the City of Bloomington, or a bid bond binding the undersigned and surety to the City of Bloomington, Indiana, in the amount of:

_____

_____ Dollars (Words)

_____ Dollars (Figures)

Which amount is not less than 5% of the total Bid amount, guaranteeing the undersigned will enter into the Contract for the performance of the work if this Proposal is accepted.

As required by the Instructions to Bidders, Questionnaire Form 96 (revised 2005), of the Indiana State Board of Accounts is properly executed and attached hereto. It is hereby agreed that this Proposal shall remain in full force and effect, and may not be withdrawn for a period of 30 days

from and after the date of bid opening by the Bloomington Parks Department, Bloomington, Indiana.

Respectfully Submitted,

_____
Company Name

_____
By (authorized signature)

_____
By (printed name)

Date_____

Office telephone_____

FAX number_____

Federal ID Number_____

Addenda acknowledgment:
#___dated _____ #____dated _____ #____dated _____

Responsible Bidder Affidavit

Contractor and any subcontractor performing **more than $150,000 worth of work on the project** shall complete this *Responsible Bidder Affidavit* as required by Chapter 2.31 of the Bloomington Municipal Code. Contractor must submit this affidavit with its bid. Failure to comply with all submission requirements may result in a determination that the Contractor is not a responsible and responsive bidder.

The undersigned _____, as _____ and on behalf of
(Name) (Title)
_____ certifies the following:
(Contractor)

Contractor is compliant with all applicable laws pre-requisite to doing business in Indiana.

Yes [ ] No [ ]

Does Contractor have a Federal Employer Identification Number (EIN) (also known as a Federal Tax Identification Number)?

Yes [ ] No [ ]

Please list your Federal Employer Identification Number: _____

Alternatively, for sole proprietors, list your social security number: _____

Contractor is in compliance with Section 2000(e) of Chapter 21, Title 42 of the United States Code and Federal Executive Order Number 11375 (known as the Equal Opportunity Employer Provisions).

Yes [ ] No [ ]

Contractor has submitted an affirmative action plan as required under § 2.21.070(8) of the Bloomington Municipal Code.

Yes [ ] No [ ]

Contractor affirms that all of its workers who qualify as employees are covered under a current worker's compensation insurance policy, and that all workers who will be part of the project are properly classified as employees or independent contractors.

Yes [ ] No [ ]

Contractor will comply with Indiana Code § 5-16-7 et. seq., known as the Indiana Common Construction Wage Act.

Yes [ ] No [ ]

Contractor confirms that any of its employees designated as apprentices are properly registered with an apprenticeship and training program approved and registered with the United States Department of Labor, Bureau of Apprenticeship and Training.

Yes [ ] No [ ]

Contractor currently has a substance abuse testing policy in place.

Yes [ ] No [ ]

Please list any professional or trade license(s) required by law for any trade or specialty area required to complete work on the present project.

_____

_____

_____

_____

Has the Contractor, or any directors, officers, or managers employed by the Contractor, had any professional or trade license suspended or revoked within the last five (5) years?

Yes [ ] No [ ]

Verification

I certify that I am authorized to execute this affidavit on behalf of the Contractor set forth above, that I have personal knowledge of all the information set forth herein, and that all statements representations, and information contained in this affidavit are true and accurate.

_____
Signature of Authorized Officer

_____
Name of Authorized Officer

_____
Title

_____
Date

BID BOND

KNOW ALL MEN THESE PRESENTS, that we, the undersigned, _____ _____as Principal, and _____ _____as Surety, are hereby held and firmly bound unto _____as OWNER in the penal sum of _____for the payment of which, well and truly to be made, we hereby jointly and severally bind ourselves, successors and assigns.

Signed, this _____ day of _____, 20_____.

The condition of the above obligation is such that whereas the Principal has submitted to _____ a certain Document1, attached hereto and hereby made a part hereof to enter into a contract in writing, for the _____

_____

NOW, THEREFORE,

1. If said BID shall be rejected, or
2. If said BID shall be accepted and the Principal shall execute and deliver a contract in the Form of Contract attachment hereto (properly completed in accordance with said BID) and shall furnish a BOND for faithful performance of said contract, and for the payment of all persons performing labor furnishing materials in connection therewith, and shall in all other respects perform the agreement created by the acceptance of said BID, then this obligation shall void, otherwise the same shall remain in force and effect; it being expressly understood and agreed that the liability of the Surety for any and all claims hereunder shall, in no event, exceed the penal amount of this obligation as herein stated.

The Surety, for value received, hereby stipulates and agrees that the obligations of said Surety and its BOND shall be in no way impaired or affected by any extension of the time within which the OWNER may accept such BID; and said Surety does hereby waive notice of any such extension.

IN WITNESS WHEREOF, the Principal and the Surety have hereto set their hands and seals, and such of them as are corporations have caused their corporate seals to be hereto affixed and these presents to be signed by their proper officers, the day and year first set forth above.

_____(L.S.)
Principal

_____
Surety

By: _____

SECTION IV
AFFIRMATIVE ACTION PLAN REQUIREMENTS

City of Bloomington
Legal Department

2011

RE: Affirmative Action and Living Wage Ordinance

To Prospective Bidders:

Affirmative Action: All bidders with the City of Bloomington for projects in excess of $10,000.00 must submit an affirmative action plan to my office. This plan must insure that applicants are employed and that employees are treated in a manner that provides equal employment opportunity and tends to eliminate inequality based upon race, religion, color, sex, national origin, ancestry or disability.

In addition, some City bidders are covered by the City's Living Wage Ordinance. The purpose of this letter is to explain what is required to be included in your plan for it to be acceptable under the Contract Compliance Regulations of the City of Bloomington and to make sure you are aware of the City's Living Wage Ordinance.

Even if your company already has a plan on file with the City, you must check with me to make sure that it complies with our current requirements. If you already have a plan, but it does not cover all of the City's current requirements, you may submit a separate supplement with your plan to fill any gaps.

You must submit your written affirmative action plan (or supplement) to me AT LEAST TWENTY- FOUR HOURS BEFORE THE BID DEADLINE. You must submit your plan to me separately from your bid. The twenty-four hours will give me sufficient time to review your and the other bidders' plans. I advise you to submit your affirmative action plan to me earlier, if possible, so that you and I will have time to work out any problems that may be in your plan. BIDDERS WHO FAIL TO SUBMIT ACCEPTABLE PLANS BY THE DEADLINE ARE SUBJECT TO DISQUALIFICATION. NON-DISCRIMINATION CLAUSES WILL BE INCLUDED IN ALL CONTRACTS AWARDED.

I strongly advise you to confirm with me that I have received your plan and that it meets our requirements well before the bid deadline. We will make every effort to work with you to clear up problems. But it remains your responsibility to confirm that I received your plan and that it complies with our requirements. If you fail to confirm that I received and approved your plan, you risk losing your eligibility to bid. We will be glad to provide a receipt upon request. Please let us know if you want a receipt when you submit your plan.

You must insure that all the protected classes listed above are included in your plan. In addition

401 North Morton Street – Bloomington, IN 47404 Phone: (812) 349.3426 - Fax: (812) 349.3441
www.bloomington.in.gov
email: mckinneb@bloomington.in.gov

to other requirements, your plan MUST include a workforce breakdown, an internal grievance procedure, a non-retaliation statement, designation of a person by name or position who is responsible for implementing the plan, applicability to both applicants and employees, recruitment of minorities, equal access to training programs, and an explanation of your methods of communicating the operations of your affirmative action plan to your employees and prospective applicants.

Accompanying this letter you will find the following materials:

(1) A workforce breakdown form. You MUST submit a workforce breakdown (sometimes called a "utilization report") with your Affirmative Action plan. This form is provided for your convenience. If you already have a current form you have completed for another jurisdiction that includes the same type of information, you may substitute a copy of that form instead of using our form. YOUR WORKFORCE BREAKDOWN FIGURES MUST BE UPDATED EVERY SIX MONTHS. Even if you already have an acceptable affirmative action plan on file with my office, you should submit a new workforce breakdown each time you bid for a City Contract, to be sure we have up-to-date figures.

(2) An affirmative action plan checklist. I will use this checklist to review your affirmative action plan. If you compare your plan with this list, you should be able to tell whether your plan fulfills the City's requirements. If you omit any of the elements on the checklist, YOUR PLAN WILL NOT BE APPROVED.

(3) A sample affirmative action plan. This may be useful if your company has never designed an affirmative action plan before. Feel free to adopt this plan as your own or to amend it to meet your needs.

Additional materials, such as the City of Bloomington's Contract Compliance Regulations, are available from my office upon request.

Living Wage: Also, please be aware that you may be required to comply with the Bloomington Living Wage Ordinance. Whether the LWO applies to your project depends upon the size and type of your project and the number of people you employ. If you have questions about the applicability of the LWO, click on the LWO flow chart at www.bloomington.in.gov/livingwage or call me. For 2010, the living wage is $11.25 an hour.

If you have any questions, contact me at (812) 349-3429 or e-mail me at mckinneb@ bloomington.in.gov. My office hours are Monday through Friday, 8-5. Thank you.

Barbara E. McKinney, Human Rights Director/Contract Compliance Officer

BLOOMINGTON HUMAN RIGHTS COMMISSION
Model Affirmative Action Plan

Policy Statement

_____, Inc., declares its policy to provide equal opportunity in employment, training and advancement, and to administer its employment practices without regard to race, color, religion, sex, national origin, ancestry or disability. Our policy of nondiscrimination will prevail throughout every aspect of our employment practices, including recruitment, hiring, training and all other terms and conditions of employment. We shall implement an affirmative action plan to make it widely known that equal employment opportunities are available on the basis of individual merit. We shall survey and analyze our employment workforce annually to determine what steps, if any, are needed to conform effectively with this equal employment policy.

Responsible Officer

Mr. or Ms. _____ (or the _____ officer) is the equal employment opportunity officer for our company and is responsible for implementing this affirmative action policy.

Publication of Policy

Our employees will be made aware of our commitment to affirmative action through the following procedures:

- posting notices on employee bulletin boards,
- including our policy statement and plan in our personnel manual,
- regularly sending out notice of our policy in paycheck envelopes, and
- training supervisors to recognize discriminatory practices.

We will make potential employees aware of our policy through the following

procedures:

- including the words "Equal Opportunity Employer" in all of our advertisements and notices for job openings,
- notifying employment agencies about our commitment, and
- sending notice of our policy to unions.

Implementing Our Policy

Our affirmative action plan will be implemented by widening our recruitment sources. We shall advertise in newspapers and other media that reach people in protected classes. We shall send job notices to schools with large percentages of students in the protected classes and to local groups that serve these classes.

We shall examine our hiring practices periodically to insure that we consider only job-related qualifications in filling our positions. We shall discard irrelevant educational requirements and unnecessary physical requirements. We shall retain only job-related questions on our employment application.

We shall keep affirmative action information on each applicant, but separate from his or her application. We shall keep records on our hiring decisions to evaluate the success of our affirmative action measures. We shall decide placement, duties, benefits, wages, training prospects, promotions, layoffs and terminations without regard to race, sex,religion, color, national origin, ancestry or disability.

Grievance Procedure

If an employee feels he or she has been discriminated against on the basis of race, sex, religion, color, national origin, ancestry or disability he or she may bring the complaint to his or her immediate supervisor. If the complaint is not resolved readily at that level, he or she may submit it to _____ _____ (personnel officer, corporate president, other) who will make a final decision on its validity. This grievance process does not preclude his or her complaining to local, state or federal civil

rights agencies. We will not retaliate against an employee or applicant for voicing a grievance or for filing a complaint with the appropriate agency.

Our current workforce breakdown is shown on the attached form.

_____ _____

Corporate President Date

SECTION V
PREVAILING SCALE OF WAGES

COMMON CONSTRUCTION WAGE SCALE

Date AUG 16, 2011

City: BLOOMINGTON **County:MONROE**

Project Description and Scope:BOARD OF PARK COMMISSIONERS
1. 3RD QUARTER PROJECTS

TYPE OF CONSTRUCTION

The three common construction wage rates listed below are for the following type of construction work **(Mark One):**

(X) Commercial Building
( ) Heavy/Highway

B. WAGE RATES

Classification	Class	Hourly Rate	FRINGE BENEFIT Compensation	Total Hourly Wage Rate
Asbestos Workers				
	Skilled	$32.34	$14.69	$47.03
	Semiskilled	$18.77	$8.37	$27.14
	Unskilled	$13.71	$8.10	$21.81
Asbestos Abatement				
	Skilled	$29.90	$13.48	$43.38
	Semiskilled	N/A	N/A	N/A
	Unskilled	N/A	N/A	N/A
Boilermakers				
	Skilled	$33.43	$22.48	$55.91
	Semiskilled	$26.74	$22.48/	$49.22
	Unskilled	$20.06	$22.48	$42.54
Bricklayers				
	Skilled	$27.20	$10.32	$37.52
	Semiskilled	$20.40	$10.32	$30.72
	Unskilled	$13.60	$10.32	$23.92
Carpenters				
	Skilled	$27.01	$14.15	$41.16
	Semiskilled	$24.31	$10.78	$35.09
	Unskilled	$21.61	$10.67	$32.28

Carpet Layers

Skilled	$25.75	$12.07	$37.82
Semiskilled	$23.18	$11.49	$34.67
Unskilled	$20.60	$10.92	$31.52

Cement Masons

Skilled	$26.90	$11.13	$38.03
Semiskilled	$26.40	$11.13	$37.53
Unskilled	$24.00	$11.13	$35.13

Drywall Finishers

Skilled	$24.95	$9.81	$34.76
Semiskilled	$17.47	$8.51	$25.98
Unskilled	$12.48		$20.12

DRYWALL FINISHERS USING AUTOMATIC TOOLS (AMES,TAPE TECH, ETC)ADD $1.00 TO HOURLY PAY

Drywall Installers

Skilled	$26.91	$13.40	$40.31
Semiskilled	$24.22	$12.72	$36.94
Unskilled	$21.53	$12.03	$33.56

Electricians

Skilled	**$33.04**	**$12.52**	**$45.55**
Semiskilled	$19.82	$9.61	$29.43
Unskilled	$16.52	$8.88	$25.40

Elevator Constructors

Skilled	$30.28	$12.12	$42.40
Semiskilled	$24.22	$12.12	$36.34
UNskilled	$21.20	$12.12	$33.32

Glaziers

Skilled	$25.86	$11.95	$37.81
Semiskilled	$18.11	$10.36	$28.47
Unskilled	$12.93	$9.30	$22.23

Iron Workers

Skilled	$27.90	$18.76	46.66

	Semiskilled	$22.32	$18.76	$41.08
	Unskilled	$16.74	$18.76	$35.50
Laborers	Skilled	$22.42	$11.20	$33.62
	Semiskilled	$21.82	$11.20	$33.02
	Unskilled	$21.18	$11.20	$32.38
LABOREERS/ ASBESTOS ABATEMENT	SKILLED	$21.82	$11.20	$33.02
	SEMISKILLED	N/A	N/A	N/A
	UNSKILLED	N/A	N/A	N/A
Millwrights				
	Skilled	$26.34	$16.33	$42.67
	Semiskilled	$23.71	$12.74	$36.45
	Unskilled	$21.07	$12.42	$33.49
Operating Engineers				
Class 1 or A				
	Skilled	$29.00	$14.07	$43.07
	Semiskilled	$25.65	$14.07	$39.72
$	Unskilled	$21.85	$14.07	$35.92
Painters/Brush/Roll				
	Skilled	$25.96	$9.81	$35.76
	Semiskilled	$18.57	$8.51	$25.98
	Unskilled	$13.48	$7.64	$20.12
Painters/Spray/Sandblast				
	Skilled	$25.95	$9.81	$35.76
Semiskilled $18.57	$8.51	$27.08		
	Unskilled	$13.48	$7.64	$21.12
Pipefitters & Steamfitters				
	Skilled	$32.27	$14.86	$47.13
	Semiskilled	$20.98	$14.86	$35.84
	Unskilled	$14.86	$14.86	$30.03
Plasters				
	Skilled	$23.48	$9.54	$33.02
	Semiskilled	$21.98	$9.54	$30.67
	Unskilled	$18.78	$9.54	$28.32
Plumbers				
	Skilled	$32.27	$14.86	$47.13
	Semiskilled	$20.98	$14.86	$35.84
	Unskilled	$15.17	$14.86	$30.03
Pointer/Caulker/Cleaners				
	Skilled	$27.45	$10.07	$37.52
	Semiskilled	$20.59	$10.07	$30.66

	Unskilled	$13.73	$10.07	$23.80
Roofers				
	Skilled	$23.78	$8.61	$32.39
	Semiskilled	$16.65	$6.01	$22.66
	Unskilled	$11.90	$2.35	$14.25
Sheet Metal Workers				
	Skilled	$31.46	$16.88	$48.34
	Semiskilled	$23.60	$15.73	$39.33
	Unskilled	$15.73	$14.69	$30.42
Sound and Communication Workers				
	Skilled	$27.56	$11.96	$39.52
	Semiskilled	$23.43	$10.89	$34.32
	Unskilled	$19.84	$10.01	$29.85
Sprinkler Fitters				
	Skilled	$31.29	$12.75	$44.04
	Semiskilled	$20.34	$12.75	$33.09
	Unskilled	$15.65	$6.81	$22.46
Stone Masons				
	Skilled	$27.20	$10.32	$37.52
	Semiskilled	$20.40	$10.32	$30.72
	Unskilled	$13.60	$10.32	$23.92
Teamsters	Skilled	$25.76	$10.30	$36.06
	Semiskilled	N/A	N/A	N/A
	Unskilled	N/A	N/A	N/A
Technical Engineers				
	Skilled	$25.81	$7.23	$32.64
	Semiskilled	$25.93	$7.23	$31.34
	Unskilled	$23.81	$7.23	$31.04
Tile, Marble Setters				
	Skilled	$28.90	$9.56	$38.46
	Semiskilled	$26.01	$9.56	$35.57
unskilled		$13.00	$9.56	$22.56

Terrazzo Setters

	Skilled	$29.50	$9.66	$39.16
	Semiskilled	$26.55	$9.66	$36.21
	Unskilled	$13.28	$9.66	$22.94

Tile, Marble, Terrazzo Finishers

Journeyman	Skilled	$19.80	$5.86	$25.66
2nd Year Apprentice	Semiskilled	$17.95	$5.86	$24.76
1st Year Apprentice	Unskilled	$12.66	$5.86	$18.13

Truck Mechanics

	Skilled	$25.76	$10.30	$36.06
	Semiskilled	N/A	N/A	N/A
	Unskilled	N/A	N/A	N/A

COMMON CONSTRUCTION WAGE SCALE

1. 3RD QUARTER PROJECTS

A. TYPE OF CONSTRUCTION

The common construction wage rates listed below are for the following type of construction work **(Mark One):**

( ) Commercial Building
(X) Heavy/Highway

B. WAGE RATES

Classification	Class	Hourly Rate	FRINGE BENEFIT Compensation	Total Hourly Wage Rate
Carpenters				
	Skilled	$24.76	$14.97	$39.73
	Semiskilled	$22.28	$11.35	$33.63
	Unskilled	$19.81	$11.24	$31.05
Electricians				
	Skilled	$29.63	$10.78	$40.41
	Semiskilled	$17.78	$8.53	$26.31
	Unskilled	$14.82	$7.97	$22.79
Iron Workers				
	Skilled	$27.90	$18.76	$46.66
	Semiskilled	$22.32	$18.76	$41.08
	Unskilled	$16.74	$18.76	$35.50
Laborers	Skilled	$23.62	$11.21	$34.83
	Semiskilled	$22.92	$11.21	$34.13
	Unskilled	$22.62	$11.21	$33.83

Operating Engineers

Class 1 or A

Journeyman	Skilled	$28.95	$15.31	$44.26
	Semiskilled	$22.70	$15.31	$38.01
	Unskilled			

Painters

Journeyman	Skilled	$28.10	$9.70	$37.80
	Semiskilled	$24.70	$9.70	$34.40
	Unskilled	**$14.20**	**$9.70**	**$23.90**

Sprinkler Fitters

Skilled	$31.29	$12.75	$44.04
Semiskilled	$20.34	$12.75	$33.09
Unskilled	$15.65	$6.81	$22.46

Teamsters

Skilled	$25.76	$10.30	$36.06
Semiskilled	N/A	N/A	N/A
Unskilled	N/A	N/A	N/A

A. TYPE OF CONSTRUCTION

The common construction wage rates listed below are for the following type of construction work **(Mark One):**

( ) Commercial Building
( ) Heavy/Highway
(X) UTILITY

B. WAGE RATES

	Classificati	Rate	FRINGE BENEFIT Rate	TOTAL HOURLY Compensation	Wage Rate
Asbestos Workers					
	Skilled	$27.83	$11.54	$39.37	
	Semiskilled	$20.25	$7.48		$27.73
	Unskilled	$17.72	$7.36	$25.08	
Bricklayers					
	Skilled	$27.20	$10.32		$37.52
	Semiskilled	$20.40	$10.32		$30.72
	Unskilled	$13.60	$10.32		$23.92
Carpenters					
	Skilled	$24.32	$14.97		$39.59
	Semiskilled	$21.89	$11.35		$33.24
	Unskilled	$19.46	$11.24		$30.70
Electricians					
	Skilled	$31.70	$11.91		$43.61
	Semiskilled	$19.02	$9.24		$28.26
	Unskilled	$15.85	$8.58	$24.43	
Iron Workers					
	Skilled	$27.90	$18.76		$46.66
	Semiskilled	$22.32	$18.76		$41.08
	Unskilled	$16.74	$18.76		$35.50
LABORERS	Skilled	$23.62	$11.21		$34.83
	Semiskilled	$22.92	$11.21		$34.13
	Unskilled	$22.62	$11.21		$33.83
Operating Engineers					
Class 1 or A					
	Skilled	$28.95	$15.31		$44.26
	Semiskilled	$22.70	$15.31		$38.01

Class 2 or B				
	Skilled	$21.20	$13.91	$35.11
Pipefitters & Steamfitters				
	Skilled	$32.17	$14.96	$47.13
	Semiskilled	$20.91	$14.96	$35.87
	Unskilled	$15.12	$14.96	$30.08
Plumbers				
	Skilled	$32.17	$14.96	$47.13
	Semiskilled	$20.91	$14.96	$35.87
	Unskilled	$15.12	$14.96	$30.08
Pointer/Caulker/Cleaners				
	Skilled	$27.45	$10.07	$37.52
	Semiskilled	$20.59	$10.07	$30.66
	Unskilled	$13.73	$10.07	$23.80
Sheet Metal Workers				
	Skilled	$30.43	$16.17	$46.60
	Semiskilled	$22.82	$15.08	$37.90
	Unskilled	$15.22	$14.09	$29.31
Sprinkler Fitters				
	Skilled	$31.29	$12.75	$44.04
	Semiskilled	$20.34	$12.75	$33.09
	Unskilled	$15.65	$6.81	$22.46
Stone Masons				
	Skilled	$27.20	$10.32	$37.52
	Semiskilled	$20.40	$10.32	$30.72
	Unskilled	$13.60	$10.32	$23.92
Teamsters	Skilled	$25.76	$10.30	$36.06
	Semiskilled	N/A	N/A	N/A
	Unskilled	N/A	N/A	N/A
Truck Mechanics				
	Skilled	$25.76	$10.30	$36.06
	Semiskilled	N/A	N/A	N/A
	Unskilled	N/A	N/A	N/A

(ADD CLASSIFICATIONS AS REQUIRED BY PROJECT)
Definitions:

Skilled: An individual who performs work in a classification listed on the scale of wages. It shall be presumed that an employee is a skilled worker in that classification, and entitled to receive compensation at the skilled rate, unless the worker satisfies all of the criteria for being categorized as a semi-skilled or unskilled worker.

Semi-skilled: An individual registered in a bona fide apprenticeship program registered with the United States Department of Labor, Employment and Training Administration, Bureau of Apprenticeship and Training. Apprentices are paid pursuant to their individually warranted percentage for the classification of work that they perform as set forth in the apprentice program standards.

Unskilled: An individual with less than twelve months of cumulative experience in the construction trades and who is not registered in a bona fide apprenticeship program.

The above definitions shall not apply to workers in the classification of Laborer.

Apprenticeship Programs:

The Wage Committee determines that the common practice in the county is for contractors to participate in bona fide apprenticeship programs registered with the U.S. Department of Labor, Bureau of Apprenticeship and Training and that the rate of pay for the classifications of labor that participate in such programs is based in part on a percentage of the journeyman's rate (skilled rate herein) depending on the individual's progress in the program.

Workers engaged in such an apprenticeship program will be permitted to work at less than the predetermined rate set out above for the work they perform. Such apprentices must be paid at not less than the rate specified in the registered program for the apprentice's level of progress, expressed as a percentage of the journeymen hourly rate which is the skilled hourly rate in this wage scale.

Any worker who is not registered or otherwise employed in a bona fide apprenticeship program registered with the U.S. Department of Labor, Bureau of Apprenticeship and Training and has twelve or more months of cumulative experience in the construction trades shall be paid at the skilled wage rate on this wage determination for the classification of work actually performed by the worker regardless of how the employer classifies such a worker.

Disputes regarding the appropriate classification of workers and the amounts said workers should be paid may be submitted to the Indiana Department of Labor for investigation.

Indiana State AFL-CIO Representative

Awarding Agency Representative

abc Representative

Taxpayer Named by Appointing Agency

Taxpayer Named by County Legislative Body

08/16/2011
Date

SECTION VI
STATE FORM NO. 96
QUESTIONNAIRE/NON-COLLUSION AFFIDAVIT

CONTRACTOR'S BID FOR PUBLIC WORK - FORM 96

State Form 52414 (R / 9-10) / Form 96 (Revised 2010)
Prescribed by State Board of Accounts

PART I
(To be completed for all bids. Please type or print)

Date *(month, day, year):*_____

1. Governmental Unit (Owner):_____
2. County :_____
3. Bidder (Firm):_____

   Address:_____

   City/State/ZIPcode:_____
4. Telephone Number:_____
5. Agent of Bidder *(if applicable):*_____

Pursuant to notices given, the undersigned offers to furnish labor and/or material necessary to complete the public works project of _____ (Governmental Unit) in accordance with plans and specifications prepared by _____ _____ and dated _____ for the sum of _____ $_____

The undersigned further agrees to furnish a bond or certified check with this bid for an amount specified in the notice of the letting. If alternative bids apply, the undersigned submits a proposal for each in accordance with the notice. Any addendums attached will be specifically referenced at the applicable page.

If additional units of material included in the contract are needed, the cost of units must be the same as that shown in the original contract if accepted by the governmental unit. If the bid is to be awarded on a unit basis, the itemization of the units shall be shown on a separate attachment.

The contractor and his subcontractors, if any, shall not discriminate against or intimidate any employee, or applicant for employment, to be employed in the performance of this contract, with respect to any matter directly or indirectly related to employment because of race, religion, color, sex, national origin or ancestry. Breach of this covenant may be regarded as a material breach of the contract.

CERTIFICATION OF USE OF UNITED STATES STEEL PRODUCTS
(If applicable)

I, the undersigned bidder or agent as a contractor on a public works project, understand my statutory obligation to use steel products made in the United States (I.C. 5-16-8-2). I hereby certify that I and all subcontractors employed by me for this project will use U.S. steel products on this project if awarded. I understand that violations hereunder may result in forfeiture of contractual payments.

ACCEPTANCE

The above bid is accepted this _____ day of _____, _____, subject to the following conditions: _____

_____

Contracting Authority Members:

_____ _____

_____ _____

_____ _____

PART II

(For projects of $100,000 or more – IC 36-1-12-4)

Governmental Unit: _____

Bidder (Firm) _____

Date *(month, day, year):* _____

These statements to be submitted under oath by each bidder with and as a part of his bid. Attach additional pages for each section as needed.

SECTION I EXPERIENCE QUESTIONNAIRE

1. What public works projects has your organization completed for the period of one (1) year prior to the date of the current bid?

Contract Amount	Class of Work	Completion Date	Name and Address of Owner

2. What public works projects are now in process of construction by your organization?

Contract Amount	Class of Work	Expected Completion Date	Name and Address of Owner

3. Have you ever failed to complete any work awarded to you? _____ If so, where and why?

_____

_____

_____

4. List references from private firms for which you have performed work.

_____

_____

_____

_____

_____

SECTION II PLAN AND EQUIPMENT QUESTIONNAIRE

1. Explain your plan or layout for performing proposed work. *(Examples could include a narrative of when you could begin work, complete the project, number of workers, etc. and any other information which you believe would enable the governmental unit to consider your bid.)*

_____

_____

_____

_____

_____

2. Please list the names and addresses of all subcontractors *(i.e. persons or firms outside your own firm who have performed part of the work)* that you have used on public works projects during the past five (5) years along with a brief description of the work done by each subcontractor.

_____

_____

_____

_____

_____

3. If you intend to sublet any portion of the work, state the name and address of each subcontractor, equipment to be used by the subcontractor, and whether you will require a bond. However, if you are unable to currently provide a listing, please understand a listing must be provided prior to contract approval. Until the completion of the proposed project, you are under a continuing obligation to immediately notify the governmental unit in the event that you subsequently determine that you will use a subcontractor on the proposed project.

_____

_____

_____

_____

_____

4. What equipment do you have available to use for the proposed project? Any equipment to be used by subcontractors may also be required to be listed by the governmental unit.

_____

_____

_____

_____

_____

5. Have you entered into contracts or received offers for all materials which substantiate the prices used in preparing your proposal? If not, please explain the rationale used which would corroborate the prices listed.

_____

_____

_____

_____

_____

SECTION III CONTRACTOR'S FINANCIAL STATEMENT

Attachment of bidder's financial statement is mandatory. Any bid submitted without said financial statement as required by statute shall thereby be rendered invalid. The financial statement provided hereunder to the governing body awarding the contract must be specific enough in detail so that said governing body can make a proper determination of the bidder's capability for completing the project if awarded.

SECTION IV CONTRACTOR'S NON – COLLUSION AFFIDAVIT

The undersigned bidder or agent, being duly sworn on oath, says that he has not, nor has any other member, representative, or agent of the firm, company, corporation or partnership represented by him, entered into any combination, collusion or agreement with any person relative to the price to be bid by anyone at such letting nor to prevent any person from bidding nor to include anyone to refrain from bidding, and that this bid is made without reference to any other bid and without any agreement, understanding or combination with any other person in reference to such bidding.

He further says that no person or persons, firms, or corporation has, have or will receive directly or indirectly, any rebate, fee, gift, commission or thing of value on account of such sale.

SECTION V OATH AND AFFIRMATION

I HEREBY AFFIRM UNDER THE PENALTIES FOR PERJURY THAT THE FACTS AND INFORMATION CONTAINED IN THE FOREGOING BID FOR PUBLIC WORKS ARE TRUE AND CORRECT.

Dated at _____ this _____ day of _____, _____

_____
(Name of Organization)

By_____

_____
(Title of Person Signing)

ACKNOWLEDGEMENT

STATE OF _____)
) ss
COUNTY OF_____)

Before me, a Notary Public, personally appeared the above-named _____ and

swore that the statements contained in the foregoing document are true and correct.

Subscribed and sworn to before me this _____ day of _____, _____.

_____
Notary Public

My Commission Expires:_____

County of Residence:_____

Part of State Form 52414 (R / 9-10) / Form 96 (Revised 2010)

BID OF

_____
(Contractor)

_____
(Address)

_____

FOR

PUBLIC WORKS PROJECTS

OF

_____

_____

_____

Filed _____, _____

Action taken _____

_____

SECTION VII
GENERAL CONDITIONS

GENERAL CONDITIONS

FOR

CONSTRUCTION

INDEX TO THE ARTICLES OF THE GENERAL CONDITIONS

1. DEFINITIONS
2. EXECUTION OF DOCUMENTS
3. CORRELATION, INTERPRETATION AND INTENT OF DOCUMENTS
4. AVAILABILITY OF LANDS; PHYSICAL CONDITIONS; REFERENCE POINTS
5. BONDS AND INSURANCE
6. CONTRACTOR'S RESPONSIBILITIES
7. WORK BY OTHERS
8. OWNER'S RESPONSIBILITIES
9. ENGINEER'S RESPONSIBILITIES DURING CONSTRUCTION
10. CHANGES IN THE WORK
11. CHANGES IN CONTRACT PRICE
12. CHANGE OF CONTRACT TIME
13. LIQUIDATED DAMAGES
14. WARRANTY AND GUARANTEE: TESTS AND INSPECTIONS; CORRECTION, REMOVAL OR ACCEPTANCE OF DEFECTIVE WORK.
15. PAYMENTS AND COMPLETION.
16. SUSPENSION OF WORK AND TERMINATION.
17. ARBITRATION.
18. ENVIRONMENTAL REQUIREMENTS.
19. MISCELLANEOUS.

1.00. DEFINITIONS.

The Owner, the Contractor and the Engineer, are those mentioned as such in the Agreement. They are treated throughout the Contract Documents as if each were of the singular number and masculine gender. Wherever used in these General Conditions or in the other Contract Documents, the following terms have the meanings indicated which are applicable to both the singular and plural thereof:

1.01. ADDENDA. Written or graphic instruments issued prior to the execution of the Agreement which modify or interpret the Contract Documents, by additions, deletions, clarifications, or corrections. Addenda will become part of the Contract Documents when the Agreement is executed.

1.02. AGREEMENT. The contractual agreement between the Contractor and the Owner.

1.03. APPLICATION FOR PAYMENT. The form used by Contractor in requesting payments, including accompanying documentation required by the Contract Documents.

1.04. BID. The offer or proposal of the Bidder submitted on the prescribed form setting forth the prices for the Work to be performed.

1.05. BIDDER. Any person, firm, or corporation submitting a Bid for the Work.

1.06. BOARD. The City of Bloomington Board of Park Commissioners.

1.07. BONDS. Bid, performance, and payment bonds and other instruments of security, furnished by the Contractor and his surety in accordance with the Contract Documents.

1.08. CHANGE ORDER. A written order to the Contractor signed by the Owner authorizing an addition, deletion, or revision in the Work, or an adjustment in the Contract Price or the Contract Time issued after execution of the Agreement.

1.09. CONTRACT. The Contract Documents form the Contract for Construction. The Contract represents the entire and integrated agreement between the parties hereto and supersedes prior negotiations, representations, or agreements, either written or oral. The Contract may be amended or modified only by a Modification. The Contract Documents shall not be construed to create a contractual relationship of any kind (1) between the Engineer and the Contractor, (2) between the Owner and a Subcontractor or Sub subcontractor, or (3) between any persons or entities other than the Owner and Contractor.

1.10. CONTRACT DOCUMENTS. The Agreement, Addenda (whether issued prior to the opening of Bids or the execution of the Agreement), Change Orders issued by the Owner or Engineer, Invitation to Bid, Instructions to Bidders, Proposal, Non-Collusion Affidavit, Questionnaire, Contractor's Bid, the Bonds, Employment Requirements and Wage Rates, Notification Procedures, General Equipment Stipulations, the Notice of Award, the Notice to Proceed, these General Conditions, the Special Conditions, the Specifications, Drawings, and Modifications.

1.11. CONTRACT PRICE. The total amount payable to the Contractor under the Contract Documents.

1.12. CONTRACT TIME. The number of days stated in the Agreement for the completion of the Work, computed as provided in these General Conditions; or by the date set forth in the Agreement. Contract days are not to be determined from the usage of the Indiana Department of Transportation (I.N.D.O.T.) Standard Specifications Manual.

1.13. CONTRACTOR. The person, firm, or corporation with whom the Owner has executed the Agreement and is referred to throughout the Contract Documents as if singular in number. The term "Contractor" means the Contractor or the Contractor's authorized representative. The relationship of the Contractor to the Owner shall be that of an independent contractor.

1.14. DAY. A calendar day of twenty-four hours measured from midnight to the next midnight.

1.15. DATE OF CONTRACT. The date written in the first paragraph of the Contract Agreement.

1.16. **DRAWINGS OR PLANS.** The graphic and pictorial portions of the Contract Documents, wherever located or whenever issued, showing the design, location and dimensions of the Work, generally including plans, elevations, sections, details, schedules and diagrams.

1.17. **ENGINEER.** The City Engineer, person, firm, or corporation named by the Owner "the City of Bloomington", or the duly authorized agents of the Engineer, acting within the scope of the duties entrusted to them.

1.18. **FIELD ORDER.** A written order issued by the Engineer which clarifies or interprets the Contract Documents or orders minor changes in the Work.

1.19. **MODIFICATION.** (a) A written amendment of the Contract Documents signed by both parties. (b) A Change Order. (c) A written clarification or interpretation issued by the Engineer. (d) A written order for a minor change or alteration in the Work issued by the Engineer. A Modification may be issued only after execution of the Agreement.

1.20. **NOTICE OF AWARD.** The Written notice by the Owner to the apparent successful Bidder stating that upon compliance with the conditions precedent to be fulfilled by him within the time specified, the Owner will execute and deliver the Agreement to him.

1.21. **NOTICE TO PROCEED.** A written notice given to the Contractor by the Owner (with a copy to the Engineer) fixing the date on which the Contract Time will commence to run and on which the Contractor shall start to perform his obligations under the Contract Documents.

1.22. **OWNER.** The City of Bloomington named and designated in the Agreement as "Owner" acting through its Board of Public Works and its authorized agents. All notices, letters, and other communication directed to the Owner shall be addressed and delivered to the Office of the City Engineer, 401 North Morton, Bloomington, Indiana, 47401.

1.23. **PROJECT.** The total construction of which the Work performed under the Contract Documents may be the whole or a part, and which may include construction by the Owner or by separate contractors.

1.24. **QUOTE.** The offer or proposal of the Quoter submitted on the prescribed form setting forth the prices for the Work to be performed.

1.25. **QUOTER** Any person, firm, or corporation submitting a Quote for the Work.

1.26. **RESPONSIBLE Bidder.** One who is fully capable of performing the contract requirements and who has the integrity and reliability to insure faithful performance.

1.27. **RESPONSIVE Bidder.** One who has submitted a bid conforming in all material respects to the Contract Documents.

1.28. **SHOP DRAWINGS.** All drawings, diagrams, illustrations, brochures, schedules and other data which are prepared by the Contractor, a Subcontractor, manufacturer, supplier or distributor and which illustrate the equipment, material or some portion of the Work.

1.29. **SPECIFICATIONS.** Those portions of the Contract Documents consisting of written technical descriptions of materials, equipment, construction systems, standards and workmanship as applied to the Work, and performance of related services.

1.30. **SUBCONTRACTOR.** An individual, firm, or corporation having a direct contact with the Contractor or with any other Subcontractor for the performance of a part of the Work to a special design at the site, but does not include a firm which merely furnishes material.

1.31. **SUBSTANTIAL COMPLETION.** The date as determined by the Engineer when the construction of the Project or a specified part thereof is sufficiently completed, in accordance with the Contract Documents, so that the Project or specified part can be utilized for the purposes for which it was intended; or if there be no such determination, the date of final completion.

1.32. **WORK.** Any and all obligations, duties, and responsibilities necessary to the successful completion of the Project assigned to, or undertaken by, the Contractor under the Contract Documents, including all labor, materials, equipment, and other incidentals, and the furnishing thereof.

1.33. MISCELLANEOUS DEFINITIONS

1.33.1. **AS ORDERED, AS DIRECTED, AS REQUIRED, AS PERMITTED, AS ALLOWED.** The order, directions, requirement, permission, or allowance of the Owner or Engineer is intended only to the extent of judging compliance with the Contract Documents. The terms do not imply that the Owner or Engineer has any authority or responsibility for supervision of the Contractor's forces or construction operations. Such supervision is the sole responsibility of the Contractor.

1.33.2. **REASONABLE, SUITABLE, ACCEPTABLE, PROPER, SATISFACTORY.** The terms reasonable, suitable, acceptable, proper, and satisfactory mean such to the Owner or Engineer and are intended only to the extent of judging compliance with the Contract Documents.

1.33.3. **UNDERSTOOD AND AGREED.** Whenever in these Contract Documents the expression "it is understood and agreed" or an expression of like import is used, such expression means the mutual understanding and agreement of the parties executing the Contract Agreement.

2.00. **EXECUTION OF AGREEMENT.**

2.01. **EXECUTION OF AGREEMENT.** The Agreement and other Contract Documents will be executed as set forth in the Special Conditions.

2.02. **DELIVERY OF BONDS.** When the executed Agreements are delivered to the Owner, the Contractor shall also deliver to the Owner such Bonds as he may be required to furnish in accordance with the Agreement.

2.03. **COPIES OF DOCUMENTS.** The Owner shall furnish to the Contractor the number of copies of the Contract Documents set forth in the Special Conditions or a minimum of 3 sets of complete documents.

2.04. **CONTRACTOR'S PRE-AWARD REPRESENTATIONS.** The Contractor represents that he has familiarized himself with, and assumes full responsibility for having familiarized himself with, the nature and extent of the Contract Documents, Work, locality, and with all local conditions and federal, state, and local laws, ordinances, rules and regulations that may in any manner affect performance of the Work, and represents that he has correlated his study, observations and site visits with the requirements of the Contract Documents. The Contractor also represents that he has studied all surveys and investigation reports of subsurface and latent physical conditions referred to in the Specifications and made such additional surveys and investigations as he deems necessary for the performance of the Work at the Contract Price in accordance with the requirements of the Contract Documents and that he has correlated the results of all such data with the requirements of the Contract Documents.

2.05. **COMMENCEMENT OF CONTRACT TIME; NOTICE TO PROCEED.** Unless otherwise provided in the SPECIAL CONDITIONS**,** the Contractor will be expected to start active and continuous work on the contract within 5 calendar days after the date of the Notice to Proceed. In **no case** shall work begin prior to the date of the Notice to Proceed unless this time is waived and mutually agreed upon and indicated on the Notice to Proceed.

If a delayed starting date is indicated in the proposal, the 5 calendar day limitation shall be waived. Work day charges will then begin on a date mutually agreed upon, but not later than the delayed starting date specified. In the event that any contract is canceled after an award has been made but prior to the issuing of the Notice to Proceed, no reimbursement will be made for any expenses accrued relative to this contract during that period.

2.06. **STARTING THE PROJECT.** The Engineer shall be notified at least 3 days in advance of the date on which the work is expected to begin. Should the prosecution of the work for any reason be discontinued, the Engineer shall be notified at least 24 hours in advance of resuming operations.

2.07. **BEFORE STARTING CONSTRUCTION.** Before undertaking each part of the Work, the Contractor shall carefully study and compare the Contract Documents and check and verify pertinent figures shown thereon and all applicable field measurements. He shall at once report in writing to the Engineer any conflict, error, or discrepancy which he may discover.

However, he shall not be liable to the Owner or Engineer for his failure to discover any conflict, error, or discrepancy in the Drawings or Specifications.

2.08. **SUBMISSION OF SCHEDULES.** Within ten days after delivery of the executed Agreement by the Owner to the Contractor, the Contractor shall submit to the Engineer for review, an estimated progress schedule that shall be in 'Critical Path' format and indicating the starting and completion dates of the various stages of the Work, and a preliminary schedule of Shop Drawing submissions and other specified schedules. The 'Critical Path' schedule must include all possible overlapping work that can be accomplished should one action or function not be available or accessible to the contractor in order to show that the Contractors interrelated activities that will control the work path to complete the project within the time limits set forth for the project.

Contracts with less than 60 calendar days completion time, less than 35 work days, or less than 60 days between the notice to proceed and the completion date do not need to submit a progress schedule.

The progress schedule may be used as a basis for establishing major construction operations and as a check on the progress of the work. The Engineer shall be notified at least 3 days in advance of the date on which the work is expected to begin.

Sufficient materials, equipment, labor shall be provided by the Contractor to meet the progress schedule (if required) and to guarantee the completion of the project in accordance with the plans and specifications.

3.00. **CORRELATION, INTERPRETATION, AND INTENT OF CONTRACT DOCUMENTS.**

It is the intent of the Specifications and Drawings to describe a complete Project to be constructed in accordance with the Contract Documents. The Contract Documents comprise the entire Agreement between the Owner and the Contractor. They may be altered only by a Modification.

The Contract Documents are complementary. What is called for by one is as binding as if called for by all. If the Contractor finds a conflict, error, or discrepancy in the Contract Documents, he shall call it to the Engineer's attention in writing at once. Before proceeding with the Work affected thereby, he shall not be liable to the Owner or Engineer for his failure to discover any conflict, error or discrepancy in the Specifications or Drawings. Any Work that may reasonably be inferred from the Specifications or Drawings as being required to produce the intended result shall be supplied whether or not it is specifically called for. Work, materials or equipment described in words which so applied have a well-known technical or trade meaning shall be deemed to refer to such recognized standards.

In case of discrepancy, calculated dimensions will govern over scaled dimensions; plans will govern over specifications; special conditions will govern over the plans and specifications. The instructions to bidders and the description of the pay items listed in the itemized proposal will govern over plans, specifications, and special conditions. The precedence outlined herein shall not absolve the Contractor of his responsibility with regard to errors and omissions, or from his requirement to follow all IOSHA, OSHA, any local safety ordinances, and general good construction practices.

Advantage shall not be taken of any apparent error or omission in the plans or specifications. In the event such an error or omission is discovered, the Engineer shall be notified immediately in writing. Such corrections and interpretations as may be deemed necessary for fulfilling the intent of the plans and specifications will then be made.

4.00. AVAILABILITY OF LANDS; PHYSICAL CONDITIONS; REFERENCE POINTS.

4.01. AVAILABILITY OF LANDS. The Owner shall furnish, as indicated in the Contract Documents and not later than the Notice to Proceed, the lands upon which the Work is to be done, rights-of-way for access thereto, and such other lands which are designated for use by the Contractor. Easements for permanent structures or permanent changes in existing facilities will be obtained and paid for by Owner, unless otherwise specified in the Contract Documents. If the Contractor believes that any delay in the Owner's furnishing these lands or easements entitles him to an extension of the Contract Time, he may make a claim therefor as provided in these General Conditions

4.02. PHYSICAL CONDITIONS; SURVEYS AND REPORTS. Refer to **Instructions to Bidders**. For identification of those surveys and investigation reports of subsurface and latent physical conditions at the Project site or otherwise affecting performance of the Work which have been relied upon by the Engineer in preparation of the Drawings and Specifications, refer to **SPECIAL CONDITIONS**.

4.03. UNFORESEEN PHYSICAL CONDITIONS. The Contractor shall promptly notify the Owner and Engineer in writing of any subsurface or latent physical conditions at the site differing materially from those indicated in the Contract Documents. The Engineer will promptly investigate those conditions and advise the Owner in writing if further surveys or subsurface tests are necessary. Promptly thereafter, the Owner shall obtain the necessary additional surveys and tests and furnish copies to the Engineer and Contractor. If the Engineer finds that the results of such surveys or tests indicate that there are subsurface or latent physical conditions which differ materially from those intended in the Contract Documents, and which could not reasonably have been anticipated by the Contractor, a Change Order shall be issued incorporating the necessary revisions.

4.04. REFERENCE POINTS. The Owner shall provide engineering surveys for construction to establish reference points which in his judgment are necessary to enable the Contractor to proceed with the Work. The Contractor shall be responsible for surveying and laying out the Work (unless otherwise provided in the Special Conditions), and shall protect and preserve the established reference points and shall make no changes or reallocations without the prior written approval of the Owner. He shall report to the Engineer whenever any reference point is lost or destroyed or requires relocation because of necessary changes in grades or locations. The Contractor shall replace and accurately relocate all reference points so lost, destroyed or moved at the Contractor's expense.**5.00.**

BONDS AND INSURANCE.

5.01. PERFORMANCE, PAYMENT AND OTHER BONDS. The Contractor shall furnish a Performance Bond, Payment Bond, and other Bonds specified in **AGREEMENT** as security for the faithful performance and payment of all his obligations under the Contract Documents. The Performance Bond shall be in an amount at least equal to *100%* of the Contract Price, unless otherwise listed in **SPECIAL CONDITIONS**. Bonds shall be executed on the forms (when provided) included in the Contract Documents and with such sureties as are licensed to conduct business in the state of Indiana and are named in the current list of "Surety Companies Acceptable on Federal Bonds" as published in Circular 570 (amended) by the Audit Staff Bureau of Accounts, U.S. Treasury Department. The surety shall have an "A" minimum rating of performance and a financial rating strength of five times the Contract Price, all as stated in "Best's Key Rating Guide, Property-Liability". Each Bond shall be accompanied by a "Power of Attorney" authorizing the attorney-in-fact to bind the surety and certified to include the date of the Bond.

5.02. TERMINATION OF SURETY. If the surety on any Bond furnished by the Contractor is declared a bankrupt or becomes insolvent or its right to do business is terminated or revoked in any state where any part of the Project is located, the Contractor shall within five days thereafter substitute another Bond and surety, both of which shall be acceptable to the Owner.

5.03. **CONTRACTOR'S LIABILITY INSURANCE.** The Contractor shall purchase and maintain such insurance as will protect him from claims under worker's compensation laws, disability benefit laws, or similar employee benefit laws, from claims for damages because of bodily injury, occupational sickness or disease, or death of his employees, and claims insured by personal injury liability coverage; from claims for damages because of bodily injury, sickness or disease, or death of any person other than his employees including claims insured by personal injury liability coverage; and from claims for injury to or destruction of tangible property, including loss of use resulting therefrom - any or all of which may arise out of or result from the Contractor's operations under the Contract Documents, whether such operations be by himself or by any Subcontractor or anyone directly or indirectly employed by any of them or for whose acts any of them may be legally liable. This insurance shall include the specific coverage's and be written for not less than any limits of liability and maximum deductibles specified in the Supplementary Conditions or required by law, whichever is greater, shall include contractual liability insurance and shall include the Owner and Engineer as additional insured parties. Before starting the Work, the Contractor shall file with the Owner and Engineer certificates of such insurance, acceptable to the Owner; these certificates shall contain a provision that the coverage afforded under the policies will not be canceled or materially changed until at least fifteen days prior written notice has been given to the Owner and Engineer.

6.00. CONTRACTOR'S RESPONSIBILITIES.

6.01. **SUPERVISION AND SUPERINTENDENCE.** The Contractor shall supervise and direct the Work efficiently and with his best skill and attention. He shall be solely responsible for the means, methods, techniques, sequences and procedures of construction, but he shall not be solely responsible for the negligence of others in the design or selection of a specific means, method, technique, sequence or procedure of construction which is indicated in and required by the Contract Documents. The Contractor shall be responsible to see that the finished Work complies accurately with the Contract Documents.

6.02. **RESIDENT SUPERINTENDENT.** The Contractor shall keep on the Work site at all times during its progress a competent resident superintendent, who shall not be replaced without written notice to the Owner and Engineer except under extraordinary circumstances. The superintendent will be the Contractor's representative at the site and shall have authority to act on behalf of the Contractor. All communications given to the superintendent shall be as binding as if given to the Contractor.

6.03. **LABOR, MATERIALS AND EQUIPMENT.** The Contractor shall furnish all materials, equipment, labor, transportation, construction equipment and machinery, tools, appliances, fuel, power, light, heat, telephone, water and sanitary facilities, and all other facilities and incidentals necessary for the execution, testing, initial operation, and completion of the Work.

All materials and equipment shall be new, except as otherwise provided in the Contract Documents. If required by the Engineer, the Contractor shall furnish satisfactory evidence as to the kind and quality of materials and equipment.

All materials and equipment shall be applied, installed, connected, erected, used, cleaned and conditioned in accordance with the instructions of the applicable manufacturer, fabricator or processors, except as otherwise provided in the contract Documents.

The Contractor shall be fully responsible for all acts and omissions of his Subcontractors and of persons and organizations directly or indirectly employed by them, and of persons and organizations for whose acts any of them may be liable to the same extent that he is responsible for the acts and omissions of persons directly employed by him.

Nothing in the Contract Documents shall create any contractual relationship between the Owner or Engineer and any Subcontractor or other person or organization having a direct contact with the Contractor, nor shall it create any obligation on the part of the Owner or Engineer to pay or to see to the payment of any monies due any Subcontractor or any other person or organization, except as may otherwise be required by law. The Owner or Engineer may furnish to any Subcontractor or other person or organization, to the extent practicable, evidence of amounts paid to the Contractor on account of specific Work done in accordance with the schedule of values.

The divisions and sections of the Specifications and the identification of any Drawings shall not control the Contractor in dividing the Work among Subcontractors or delineating the Work to be performed by any specific trade.

The Contractor agrees to bind specifically every Subcontractor to the specific terms and conditions of the Contract Documents for the benefit of the Owner.

All Work performed for the Contractor by a Subcontractor shall be pursuant to an appropriate agreement between the Contractor and the Subcontractor which shall contain provisions that waive all rights the contracting parties may have against one another for damages caused by fire or other perils covered by insurance, except such rights as they may have to the proceeds of such insurance. The Contractor shall pay each Subcontractor a just share of any insurance monies received by the Contractor.

6.04. **PATENT FEES AND ROYALTIES.** The Contractor shall pay all license fees and royalties and assume all costs incident to the use in the performance in the Work of any invention, design, process, product or device which is the subject of patent rights or copyrights held by others. If a particular invention, design, process, product or device is specified in the Contract Documents for use in the performance of the Work and if to the actual knowledge of the Owner or Engineer its use is subject to patent rights or copyrights calling for the payment of any license fee or royalty to others, the existence of such rights shall be disclosed by the Owner in the Contract Documents. The Contractor shall indemnify and hold harmless the Owner and Engineer and anyone directly or indirectly employed by either of them from and against all claims, damages, losses and expenses (including attorneys' fees) arising out of any infringement of patent rights or copyrights incident to the use in the performance of the Work or resulting from the incorporation in the Work of any invention, design, process, product or device not specified in the Contract Documents, and shall defend all such claims in connection with any alleged infringement of such rights.

6.05. **PERMITS.** The Contractor shall obtain and pay for all construction permits and licenses and shall pay all governmental charges and inspection fees necessary for the prosecution of the Work, which are applicable at the time of his Bid. The Owner shall assist the Contractor, when necessary, in obtaining such permits and licenses. The Contractor shall also pay all public utility charges.

6.06. **LAWS AND REGULATIONS.** The Contractor shall give all notices and comply with all laws, ordinances, rules and regulations applicable to the Work. If the Contractor observes that the Specifications or Drawings are in conflict therewith, he shall give the Engineer prompt written notice thereof, and any necessary changes shall be adjusted by an appropriate Modification. If the Contractor performs any Work knowing it to be contrary to such laws, ordinances, rules and regulations, and without such notice to the Engineer, he shall bear all costs arising therefrom; however, it shall not be his primary responsibility to make certain that the Specifications and Drawings are in accordance with such laws, ordinances, rules and regulations.

6.07. **TAXES.** The Contractor shall pay all sales, consumer, use and other similar taxes required to be paid by him in accordance with the law of the place where the work is to be performed.

6.08. **USE OF PREMISES.** The Contractor shall confine his equipment, the storage of materials and equipment and the operations of his workmen to areas permitted by law,

ordinances, permits, or the requirements of the Contract Documents, and shall not unreasonably encumber the premises with materials or equipment. No assumptions of allowable traffic closures shall be made by the Contractor unless specifically called for in a "Maintenance of Traffic" plan should one exist. All roadway and lane closures must be approved by the Engineer prior to implementing the closure and a 'Notice of Intent' to close a lane or roadway must be delivered in writing to the Engineer by the Wednesday preceding the week of the desired closure date or time so proper notification can be given to the required personnel.

The Contractor shall not load nor permit any part of any structure to be loaded with weights that will endanger the structure, nor shall he subject any part of the Work to stresses or pressures that will endanger it.

6.09. **RECORD DRAWINGS.** The Contractor shall keep one record copy of all Specifications, Drawings, Addenda, Modifications, and Shop Drawings at the site in good order and annotated to show all changes made during the construction process. These shall be available to the Engineer and shall be delivered to him for the Owner upon completion of the Project and prior to final payment.

6.10. **SAFETY AND PROTECTION.** The Contractor shall be responsible for initiating, maintaining and supervising all safety precautions and programs in connection with the Work. He shall take all necessary precautions for the safety of, and shall provide the necessary protection to prevent damage, injury, or loss to:

1) all employees on the Work and other persons who may be affected thereby.
2) all the Work and all materials or equipment to be incorporated therein, whether in storage on or off the site, and
3) other property at the site or adjacent thereto, including trees, shrubs, lawns, walks, pavements, roadways, structures and utilities not designated for removal, relocation, or replacement in the course of construction.
4) The Contractor shall comply with all applicable laws, ordinances, rules, regulations and orders of any public body having jurisdiction for the safety of persons or property or to protect them from damage, injury or loss. He shall notify owners of adjacent utilities when prosecution of the Work may affect them. All damage, injury or loss to any property caused directly or indirectly, in whole or in part, by the Contractor, any Subcontractor or anyone directly or indirectly employed by any of them or anyone for whose acts any of them may be liable, shall be remedied by the Contractor: except damage or loss attributable to the fault of Drawings or Specifications or to the acts or omissions of the Owner or Engineer or anyone employed by either of them or anyone for whose acts either of them may be liable, and not attributable, directly or indirectly, in whole or in part, to the fault or negligence of the Contractor. The Contractor's duties and responsibilities for the safety and protection of the Work shall continue until such time as all the Work is completed and the Engineer has issued a notice to the Owner and Contractor in accordance with Supplementary Conditions that the Work is acceptable.

6.11. **SUPERINTENDENT OF SAFETY.** The Contractor shall designate a responsible member of his organization at the site whose duty shall be the prevention of accidents. This person shall be the Contractor's superintendent unless otherwise designated in writing by the Contractor to the Owner. The Superintendent of Safety shall be responsible for the maintenance of traffic control devices and personnel in accordance with the Manual on Uniform Traffic Control Devices (M.U.T.C.D.) for work zone safety.

6.12. **EMERGENCIES.** In emergencies affecting the safety of persons or the Work or property at the site or adjacent thereto, the Contractor, without special instruction or authorization from the Engineer or Owner, is obligated to act, at his discretion, to prevent threatened damage, injury or loss. He shall give the Engineer prompt written

notice of any significant changes in the Work or deviations from the Contract Documents caused thereby, and a Change Order shall thereupon be issued covering the changes and deviations involved. If the Contractor believes that additional work done by him in an emergency which arose from causes beyond his control entitles him to an increase in the Contract Price or an extension of the Contract Time, he may make a claim therefore.

6.13. **INDEMNIFICATION.** The Contractor shall indemnify and hold harmless the Owner and Engineer and their agents and employees from and against all claims, damages, losses and expenses including attorneys' fees arising out of or resulting from the performance of the Work, provided that any such claim, damage, loss or expense:

1) is attributable to bodily injury, sickness, disease or death, or to injury to or destruction of tangible property (other than the Work itself) including the loss of use resulting there from and

2) is caused in whole or in part by any negligent act or omission of the Contractor, any Subcontractor, anyone directly or indirectly employed by any of them or anyone for whose acts any of them may be liable regardless of whether or not it is caused in part by a party indemnified hereunder.

In any and all claims against the Owner or Engineer or any of their agents or employees by any employee of the Contractor, any Subcontractor, anyone directly or indirectly employed by any of them or anyone for whose acts any of them may be liable, the indemnification obligation shall not be limited in any way by any limitation on the amount or type of damages, compensation or benefits payable by or for the Contractor or any Subcontractor under workmen's compensation acts, disability benefit acts or other employee benefit acts.

The indemnification obligations of the Contractor shall not extend to the liability of the Engineer, his agents or employees arising out of:

1) the preparation of maps, drawings, opinions, reports, surveys, Change Orders, designs, or specifications or

2) the giving of or the failure to give directions or instructions by the Engineer, his agents or employees, provided such giving or failure to give is the primary cause of injury or damage.

7.00. WORK BY OTHERS.

The Owner may perform additional work related to the Project by himself, or he may let other direct contracts therefore which shall contain General Conditions similar to these. The Contractor shall afford the other contractors who are parties to such direct contracts (or the Owner, if he is performing the additional work himself) reasonable opportunity for the introduction and storage of materials and equipment and the execution of work, and shall properly connect and coordinate his Work with theirs.

If any part of the Contractor's Work depends for proper execution or results upon the work of any such other contractor (or Owner), the Contractor shall inspect and promptly report to the Engineer in writing any defects or deficiencies in such work that render it unsuitable for such proper execution and results. His failure to so report shall constitute an acceptance of the other work as fit and proper for the relationship of his Work except as to defects and deficiencies which may appear in the other work after the execution of his Work.

The Contractor shall do all cutting, fitting, and patching of his Work that may be required to make its several parts come together properly and fit it to receive or be received by such other work. The Contractor shall not endanger any work of others by cutting, excavating, or otherwise altering their work and will only cut or alter their work

with the written consent of the Engineer and of the other contractors whose work will be affected.

If the performance of additional work by other contractors or the Owner is not noted in the Contract Documents prior to the execution of the contract, written notice thereof shall be given to the Contractor prior to starting any additional work. If the Contractor believes that the performance of any such additional work by the Owner or others involves him in additional expense or entitles him to an extension of the Contract Time, he may make a claim therefor.

8.00. OWNER'S RESPONSIBILITIES.

The Owner shall issue all communications to the Contractor through the Engineer.

In case of termination of the employment of the Engineer, the Owner shall appoint an engineer against whom the Contractor makes no reasonable objection, whose status under the Contract Documents shall be that of the former Engineer. Any dispute in connection with such an appointment shall be subject to arbitration.

The Owner shall furnish the data required of him under the Contract Documents promptly and shall make payments to the Contractor promptly after they are due.

In addition to his rights to request changes in the Work, the Owner shall be obligated to execute Change Orders.

9.00. ENGINEER'S STATUS DURING CONSTRUCTION.

9.01. OWNER'S REPRESENTATIVE. The Engineer will be the Owner's representative during the construction period. The duties and responsibilities and the limitations of authority of the Engineer as the Owner's representative during construction are set forth in these General Conditions and shall not be extended without the written consent of the Owner and the Engineer.

9.02. CLARIFICATIONS AND INTERPRETATIONS. The Engineer will issue with reasonable promptness such written clarifications or interpretations of the Contract Documents (in the form of Drawings or otherwise) as he may determine necessary, which shall be consistent with or reasonably inferable from the overall intent of the Contract Documents. If the Contractor believes that a written clarification and interpretation entitles him to an increase in the Contract Price, he may make a claim therefor.

9.03. REJECTING DEFECTIVE WORK. The Engineer will have authority to reject Work which is "defective" (which term is hereinafter used to describe Work that is unsatisfactory, faulty or defective, or does not conform to the requirements of the Contract Documents or does not meet the requirements of any inspection, test or approval referred to in the Specifications, or has been damaged prior to the Engineer's recommendation of final payment). He will also have authority to require special inspection or special testing of the Work whether or not the Work is fabricated, installed or completed.

9.04. DECISIONS ON DISAGREEMENTS. The Engineer will be the interpreter of the requirements of the Contract Documents and the judge of the performance hereunder. In his capacity as interpreter and judge he will exercise his best efforts to insure faithful performance by both Owner and Contractor. He will not show partiality to either and will not be liable for the result of any interpretation or decision rendered in good faith. Claims, disputes, and other matters relating to the execution and progress of the Work or the interpretation of or performance under the Contract Documents shall be referred to the Engineer for decision, which he will render in writing within a reasonable time.

9.05. ARBITRATION. Either the Owner or the Contractor may demand arbitration with respect to any such claim, dispute, or other matter that has been referred to the Engineer, except any which have been waived by the making or acceptance of final payment, such arbitration to be in accordance with these General Conditions. However,

no demand for arbitration of any such claim, dispute, or other matter shall be made until the earlier of (a) the date on which the Engineer has rendered his decision or (b) the tenth day after the parties have presented their evidence to the Engineer if he has not rendered his written decision before that date. No demand for arbitration shall be made later than thirty days after the date on which the Engineer rendered his written decision in respect to the claim, dispute or other matter as to which arbitration is sought; and the failure to demand arbitration within said thirty days' period shall result in the Engineer's decision being final and binding upon the Owner and the Contractor. If the Engineer renders a decision after arbitration proceedings have been initiated, such decision may be entered as evidence but shall not supersede the arbitration proceedings, except where the decision is acceptable to the parties concerned.

9.06. LIMITATIONS ON THE ENGINEER'S RESPONSIBILITIES. Neither the Engineer's authority to act under this article or elsewhere in the Contract Documents nor any decision made by him in good faith either to exercise or not exercise such authority shall give rise to any duty or responsibility of the Engineer to the Contractor, any Subcontractor, any material, man, fabricator, supplier or any of their agents or employees or any other person performing any of the Work.

The Engineer will not be responsible for the Contractor's means, methods, techniques, sequences, or procedures of construction, or the safety precautions and programs incident thereto, and he will not be responsible for the Contractor's failure to perform the Work in accordance with the Contract Documents.

The Engineer will not be responsible for the acts or omissions of the Contractor, or any Subcontractors, or any of his or their agents or employees or any other persons at the site or otherwise performing any of the Work.

10.00. CHANGES IN THE WORK.

Without invalidating the Agreement, the Owner may, at any time or from time to time, order additions, deletions or revisions in the Work; these will be authorized by Change Orders and initiated through a Field Order from the Engineer or Owner. Upon receipt of a Change Order, the Contractor shall proceed with the Work involved. All such Work shall be executed under the applicable conditions of the Contract Documents. If any Change Order causes an increase or decrease in the Contract Price or an extension or shortening of the Contract Time, an equitable adjustment will be made as provided in these General Conditions on the basis of a claim made by either party.

The Engineer may authorize minor changes or alterations in the Work not involving extra cost and not inconsistent with the overall intent of the Contract Documents. These may be accomplished by a Field Order. If the Contractor believes that any minor change or alteration authorized by the Engineer entitles him to an increase in the Contract Price, he may make a claim therefor.

Additional work performed by the Contractor without authorization of a Change Order will not entitle him to an increase in the Contract Price or an extension of the Contract Time, except as otherwise provided herein.

The Owner shall execute appropriate Change Orders prepared by the Engineer covering changes in the Work to be performed as provided herein and any other claim of the Contractor for a change in the Contract Time or the Contract Price which is confirmed by the Engineer.

It is the Contractor's responsibility to notify his Surety of any changes affecting the general scope of the Work or change in the Contract Price and the amount of the applicable Bonds shall be adjusted accordingly.

11.00. CHANGE OF CONTRACT PRICE.

The Contract Price constitutes the total compensation payable to the Contractor for performing the Work. All duties, responsibilities and obligations assigned to or undertaken by the Contractor shall be at his expense without change in the Contract Price.

The Contract Price may only be changed by a Change Order. Any claim for an increase in the Contract Price shall be based on written notice delivered to the Owner and Engineer within fifteen days of the occurrence of the event giving rise to the claim. Notice of the amount of the claim with supporting data shall be delivered within forty-five days of such occurrence unless the Engineer allows an additional period of time to ascertain accurate cost data. All claims for adjustments in the Contract Price shall be determined by the Engineer if the Owner and the Contractor cannot otherwise agree on the amount involved. Any change in the Contract Price resulting from any such claim shall be incorporated in a Change Order. All changes requested by the Engineer or Owner must be submitted to the Contractor in the form of a Field Order, at which time, the contractor shall provide in return a request for a change order with the prices for said requested work detailed by item and quantity for the Engineer and Owner to review for acceptance and so they can issue a Change Order for the approved work.

The value of any Work covered by a Change Order or of any claim for an increase or decrease in the Contract Price shall be determined in one of the following ways:

1) Where the Work involved is covered by unit prices contained in the Contract Documents, by application of unit prices to the quantities of the items involved.
2) By mutual acceptance of a lump sum.
3) On the basis of the Cost of the Work plus a Contractor's Fee for overhead and profit (determined in accordance with the following paragraphs).

11.01. COST OF THE WORK. The term "Cost of the Work" means the sum of all costs necessarily incurred and paid by the Contractor in the proper performance of the Work. Except as otherwise may be agreed to in writing by the Owner, such costs shall be in amounts no higher than those prevailing in the locality of the Project, and shall include only the following items:

1) Payroll costs for employees in the direct employ of the Contractor in the performance of the Work under schedules of job classifications set forth in the Wage Scale Determination. Payroll costs for employees not employed full time on the Work shall be apportioned on the basis of their time spent on the Work. Payroll costs shall include, but not be limited to, salaries and wages plus the cost of fringe benefits which shall include social security contributions, unemployment, excise and payroll taxes, worker's compensation, health and retirement benefits, bonuses, sick leave, vacation and holiday pay applicable thereto. Such employees shall include superintendents and foremen at the site. The expenses of performing Work after regular working hours, on Sunday or legal holidays shall be included in the above to the extent authorized by the Owner.
2) The cost of all materials and equipment furnished and incorporated in the Work, including costs of transportation and storage thereof, and manufacturers' field services required in connection therewith. All cash discounts shall accrue to the Contractor unless the Owner deposits funds with the Contractor with which to make payments, in which case the cash discounts shall accrue to the Owner. All trade discounts, rebates and refunds, and all returns from sale of surplus materials and equipment shall accrue to the Owner, and the Contractor shall make provisions so that they may be obtained.

3) Payments made by the Contractor to the Subcontractors for Work performed by the Subcontractors. If required by the Owner, the Contractor shall obtain competitive bids from Subcontractors acceptable to him and shall deliver such bids to the Owner, who will then determine with the advice of the Engineer which bids will be accepted. If a subcontract provides that the Subcontractor is to be paid on the basis of Cost of the Work Plus a Fee, the Subcontractor's Cost of the Work shall be determined in the same manner as the Contractor's Cost of the Work. All subcontracts shall be subject to the other provisions of the Contract Documents insofar as applicable.

4) Costs of special consultants (including, but not limited to, engineers, architects, testing laboratories, surveyors, lawyers and accountants) employed for services specifically related to the Work.

11.02. **SUPPLEMENTAL COSTS** include the following:

1) The proportion of necessary transportation, traveling and subsistence expenses of the Contractor's employees incurred in discharge of duties connected with the Work.

2) The cost, including transportation and maintenance, of all materials, supplies, equipment, machinery, appliances, office and temporary facilities at the site and hand tools not owned by the workmen, which are consumed in the performance of the Work, and cost less market value of such items used but not consumed which remain the property of the Contractor.

3) Rentals of all construction equipment and machinery and the parts thereof whether rented from the Contractor or others in accordance with the rental agreements approved by the Owner with the advice of the Engineer, and the costs of transportation, loading, unloading, installation, dismantling and removal thereof - all in accordance with the terms of said rental agreements. The rental of any such equipment, machinery or parts shall cease when the use thereof is no longer necessary for the Work.

4) Sales, use or similar taxes related to the Work, and for which the Contractor is liable, imposed by any governmental authority.

5) Deposits lost for causes other than the Contractor's negligence, royalty payments and fees for permits and licenses.

6) Losses, damages and expenses, not compensated by insurance or otherwise, sustained by the Contractor in connection with the execution of, and to, the Work, provided they have resulted from causes other than the negligence of the Contractor, any Subcontractor, or anyone directly or indirectly employed by any of them or for whose acts any of them may be liable. Such losses shall include settlements made with the written consent and approval of the Owner. No such losses, damages and expenses shall be included in the Cost of the Work for the purpose of determining the Contractor's fee. If, however, any such loss or damage requires reconstruction and the Contractor is placed in charge thereof, he shall be paid for his services a fee proportionate to that stated under Contractor's Fee.

7) The cost of utilities, fuel and sanitary facilities at the site.

8) Minor expenses such as telegrams, long distance phone calls, telephone service at the site, expressage and similar petty cash items in connection with the Work.

9) The cost of premiums for additional bonds and insurance required because of changes in the Work.

11.03 The term "**COST OF THE WORK**" shall *not* include any of the following:

1) Payroll costs and other compensation of the Contractor's officers, executives, principals (of partnership and sole proprietorships), general managers, engineers, architects, estimators, lawyers, auditors, accountants, purchasing and contracting agents, expediters, timekeepers, clerks, and other personnel employed by the Contractor, whether at the site or in his principal or a branch office for general administration of the Work and not specifically included in the agreed upon schedule of job classifications - all of which are to be considered administrative costs covered by the Contractor's Fee.
2) Expenses of the Contractor's principal and branch offices other than his office at the site.
3) Any part of the Contractor's capital expenses, including interest on the Contractor's capital employed for the Work and charges against the Contractor for delinquent payments.
4) Cost of premiums for all bonds and for all insurance policies whether or not the Contractor is required by the Contract Documents to purchase and maintain the same (except as otherwise provided above).
5) Costs due to the negligence of the Contractor, any Subcontractor, or anyone directly or indirectly employed by any of them or for whose acts any of them may be liable, including but not limited to the correction of defective Work, disposal of materials or equipment wrongly supplied and making good any damage to property.
6) Other overhead or general expense costs of any kind not specifically and expressly included in the Cost of the Work.

11.04. CONTRACTOR'S FEE. The Contractor's Fee which includes his overhead and profit shall be determined as follows:

1) A mutually acceptable fee; or , if none can be agreed upon,
2) A fee based on the following percentages of the various portions of the Cost of the Work:
   - for payroll costs and the cost of all materials and equipment included in the Work, the Contractor's Profit shall be ten percent.
   - for payments to Subcontractors, the Contractor's Profit shall be five percent; and if a subcontract is on the basis of Cost of the Work Plus a Fee, the maximum allowable to the Subcontractor as a fee for overhead and profit shall be ten percent, and
   - no fee shall be payable on the basis of costs of special consultants or supplemental costs.

11.05. CREDIT. The amount of credit to be allowed by the Contractor to the Owner for any such change which results in a net decrease in cost, will be the amount of the actual net decrease. When both additions and credits are involved in any one change, the combined overhead and profit shall be figured on the basis of the net increase, if any.

Whenever the cost of any Work is to be determined pursuant to preceding paragraphs, the Contractor will submit in form prescribed by the Engineer an itemized cost breakdown together with supporting data.

12.00. CHANGE OF CONTRACT TIME.

The Contract Time may only be changed by a Change Order. Any claim for an extension in the Contract Time shall be based on written notice delivered to the Owner and Engineer

within fifteen days of the occurrence of the event giving rise to the claim. Notice of the extent of the claim with supporting data shall be delivered within forty-five days of such occurrence unless the Engineer allows an additional period of time to ascertain more accurate data. All claims for adjustment in the Contract Time shall be determined by the Engineer if the Owner and the Contractor cannot otherwise agree. Any change in the Contract Time resulting from any such claim shall be incorporated in a Change Order. Computation of Contract time shall be in accordance with the contract agreement and not that of the Indiana Department of Transportation (INDOT)

The Contract Time will be extended in an amount equal to time lost due to delays beyond the control of the Contractor if he makes a claim therefore as provided in the preceding paragraph. Such delays shall include, but not be restricted to, acts or neglect by any separate contractor employed by the Owner, fires, floods, labor disputes, epidemics, abnormal weather conditions, or acts of God.

All time limits stated in the Contract Documents are of the essence of the Agreement. The provisions made herein shall not exclude recovery for damages (including compensation for additional professional services) for delay by either party.

13.00. LIQUIDATED DAMAGES.

Liquidated damages shall be paid to the Owner in accordance with the Special Conditions if specified therein. If no provision is made in the Special Conditions, liquidated damages shall be paid as follows:

In the event the Contractor fails to satisfactorily complete the entire Work contemplated and provided for under this contract on or before the date of completion as determined and described elsewhere herein, the Owner shall deduct from the amount due the Contractor the sum as indicated on the table below for each calendar day (Sundays and legal holidays excluded) of delay, which sum is agreed upon not as a penalty, but as a fixed and liquidated damage for each day of such delay, to be paid in full and subject to no deduction, it being understood and agreed that timely completion is of the essence. If the monies due the Contractor are less than the amount of such liquidated damages, then the Contractor or his surety shall pay the balance to the Owner.

SCHEDULE FOR LIQUIDATED DAMAGES FOR EACH DAY OF OVERRUN IN CONTRACT TIME

Original Contract Amount		Daily Charge	
From More Than	To and Including	Calendar Day or Fixed Date	Work Day
$0	$100,000.00	$200.00	$200.00
$100,000.00	$500,000.00	$300.00	$400.00
$500,000.00	$2,000,000.00	$400.00	$800.00
$2,000,000.00	$7,000,000.00	$500.00	$1,500.00
$7,000,000.00	----------	$700.00	$2,000.00

14.00. WARRANTY AND GUARANTEE: TESTS AND INSPECTIONS; CORRECTION, REMOVAL OR ACCEPTANCE OF DEFECTIVE WORK.

14.01. WARRANTY AND GUARANTEE. The Contractor warrants and guarantees to the Owner and Engineer that all materials and equipment will be new unless otherwise specified and that all Work will be of good quality and free from faults or defects and in accordance with the requirements of the Contract Documents and of any inspections, tests or approvals referred to in the Tests and Inspection paragraph. All unsatisfactory Work, all faulty or defective Work, and all Work not conforming to the requirements of the Contract Documents at the time of acceptance thereof or of such inspections, tests

or approvals, shall be considered defective. Prompt notice of all defects shall be given to the Contractor. All defective Work, whether or not in place, may be rejected, corrected, or accepted as provided herein.

14.02. **TESTS AND INSPECTIONS.** If the Contract Documents, laws, ordinances, rules, regulations or orders of any public authority having jurisdiction require any Work to specifically be inspected, tested, or approved by some public body, the Contractor shall assume full responsibility therefor, pay all costs in connection therewith and furnish the Engineer the required certificates of inspection, testing, or approval. All other inspections, tests, or approvals required by the Contract Documents shall be performed by organizations acceptable to the Owner and the Contractor and the costs thereof shall be borne by the Owner unless otherwise specified.

The Contractor shall give the Engineer timely notice of readiness of the Work for all inspections, tests or approvals. If any such Work required so to be inspected, tested or approved is covered without written concurrence of the Engineer, it must, if requested by the Engineer, be uncovered for observation, and such uncovering shall be at the Contractor's expense unless the Contractor has given the Engineer timely notice of his intention to cover such Work and the Engineer has not acted with reasonable promptness in response to such notice. This timeframe of notification shall be no less than 2 hours, and occur during normal working hours of the City of Bloomington (Monday through Friday – 8:00a.m. to 5:00p.m.) Requests for inspection during all other hours shall receive 48 hours notice

Neither observations by the Engineer nor inspections, tests or approvals by persons other than the Contractor shall relieve the Contractor from his obligations to perform the Work in accordance with the Contract Documents.

14.03. **ACCESS TO WORK.** The Engineer and his representatives and other representatives of the Owner will at reasonable times have access to the Work. The Contractor shall provide proper and safe facilities for such access and observation of the Work and also for any inspection or testing thereof by others.

14.04. **UNCOVERING WORK.** If any Work is covered contrary to the written request of the Engineer, it must, if requested by the Engineer, be uncovered for his observation and replaced at the Contractor's expense.

If any Work has been covered which the Engineer has not specifically requested to observe prior to its being covered, or if the Engineer considers it necessary or advisable that covered Work be inspected or tested by others, the Contractor, at the Engineer's request, shall uncover, expose or otherwise make available for observation, inspection or testing as the Engineer may require, that portion of the Work in question, furnishing all necessary labor, material and equipment. If it is found that such Work is defective, the Contractor shall bear all the expenses of such uncovering, exposure, observation, inspection and testing and of satisfactory reconstruction, including compensation for additional professional services, and an appropriate deductive Change Order shall be issued. If, however, such Work is not found to be defective, the Contractor shall be allowed an increase in the Contract Price or an extension of the Contract Time, or both, directly attributable to such uncovering, exposure, observation, inspection, testing and reconstruction if he makes a claim therefor.

14.05. **OWNER MAY STOP THE WORK.** If the Work is defective, or the Contractor fails to supply sufficient skilled workmen or suitable materials or equipment, or if the Contractor fails to make prompt payment to Subcontractors or for labor, materials or equipment, the Owner may order the Contractor to stop the Work, or any portion thereof, until the cause for such order has been eliminated; however, this right of the Owner to stop the Work shall not give rise to any duty on the part of the Owner to exercise this right for the benefit of the Contractor or any other party.

14.06. **CORRECTION OR REMOVAL OF DEFECTIVE WORK.** If required by the Engineer prior to his recommendation of final payment, the Contractor shall promptly, without cost to the

Owner and as specified by the Engineer, either correct any defective Work, whether or not fabricated, installed or completed, or, if the Work has been rejected by the Engineer, remove it from the site and replace it with nondefective Work. If the Contractor does not correct such defective Work within a reasonable time, all as specified in a written notice from the Engineer, the Owner may have the deficiency corrected or the rejected Work removed and replaced. All direct or indirect costs of such correction or removal and replacement, including compensation for additional professional services, shall be paid by the Contractor, and an appropriate deductive Change Order shall be issued. The Contractor shall also bear the expenses of making good all Work of others destroyed or damaged by his correction, removal or replacement of his defective Work.

14.07. CORRECTION PERIOD. If, after final payment and prior to the expiration of two years after the date of Substantial Completion (unless a longer period is set forth in the Supplementary Conditions) or such longer period as may be prescribed by law or by the terms of any applicable special guarantee required by the Contract Documents, any Work is found to be defective, the Contractor shall promptly, without cost to the Owner and in accordance with the Owner's written instructions, either correct such defective Work or, if it has been rejected by the Owner, remove it from the site and replace it with nondefective Work. If the Contractor does not promptly comply with the terms of such instructions, the Owner may have the defective Work removed and replaced, and all direct and indirect costs of such removal and replacement, including compensation for additional professional services, shall be paid by the Contractor.

14.08. ACCEPTANCE OF DEFECTIVE WORK. If, instead of requiring correction or removal and replacement of defective Work, the Owner (and, prior to final payment, the Engineer) prefers to accept it, he may do so. In such case, if acceptance occurs prior to final payment, a Change Order shall be issued incorporating the necessary revisions in the Contract Documents, including appropriate reduction in the Contract Price; or, if the acceptance occurs after final payment, an appropriate amount shall be paid by the Contractor to the Owner.

14.09. NEGLECTED WORK BY THE CONTRACTOR. If the Contractor should fail to prosecute the Work in accordance with the Contract Documents, including any requirements of the progress schedule, the Owner, after seven days written notice to the Contractor may, without prejudice to any other remedy he may have, make good such deficiencies and the cost thereof (including compensation for additional professional services) shall be charged against the Contractor if the Engineer agrees with such action, in which case a Change Order shall be issued incorporating the necessary revisions in the Contract Documents including an appropriate reduction in the Contract Price. If the payments then or thereafter due the Contractor are not sufficient to cover such amount, the Contractor shall pay the difference to the Owner.

15.00. PAYMENTS AND COMPLETION.

15.01. APPLICATION FOR PROGRESS PAYMENT. The Contractor may, no more frequently than every two weeks, make an estimate of the value of the Work completed, and submit an Application for Payment. The estimated cost of repairing, replacing, or rebuilding any part of the Work or replacing materials which do not conform to the Contract Documents will be deducted from the estimated value. The Application for Payment shall be submitted to the Engineer for review and approval.

15.02. CONTRACTOR'S WARRANTY OF TITLE. The Contractor warrants and guarantees that title to all Work, materials and equipment covered by any Application for Payment, whether incorporated in the Project or not, will pass to the Owner at the time of payment free and clear of all liens, claims, security interests and encumbrances (hereafter in these General Conditions referred to as "Liens").

15.03. **REVIEW OF APPLICATION FOR PAYMENT.** The Contractor shall furnish to the Engineer such detailed information as he may request to aid in the review and approval of such Estimates. The Engineer will, within five working days after receipt of each Application for Payment, either recommend payment and present the Application to the Owner, or return the Application to the Contractor indicating in writing his reasons for refusing to recommend payment. In the latter case, the Contractor may make the necessary corrections and resubmit the Application. The Owner will pay to the Contractor within forty-five days after receipt of Application. Retainage shall be withheld from each payment in the amount of 10% of each Application up to 50% completion. At 50% completion further payments shall be made in full to the contractor and no further amounts may be retained unless the Engineer certifies that the job is not proceeding satisfactorily, but amounts previously retained shall not be paid to the Contractor. At 50% completion or any time thereafter when the progress of the Work is not satisfactory, additional amounts may be retained, but in no event shall the total retainage be more than 10% of the value of the work completed. Upon substantial completion of the work, any amount retained may be paid to the Contractor. When the work has been substantially completed except for the work which cannot be completed due to weather conditions, lack of materials or other reasons which in the judgment of the Owner are valid reasons for noncompletion, the Owner may make additional payments, retaining at all times an amount sufficient to cover the estimated cost of the work still to be completed. Such Applications for Payment are processed on a regular biweekly schedule, which will be provided to the Contractor.

15.04. **FINAL INSPECTION.** When the Work has been substantially completed and at a time mutually agreeable to the Owner, Engineer, and Contractor, the Engineer and Contractor shall make a final walk-through inspection of the Work. The Engineer shall report to the Owner his findings as to the acceptability and completeness of the Work.

15.05. **APPLICATION FOR FINAL PAYMENT.** Upon written notice from the Engineer that Work is completed and acceptable as provided in the Supplementary Conditions, the Contractor shall make application for final payment following the procedure for progress payments. The final Application for Payment shall be accompanied by all other documentation called for in the Contract Documents and such other data and schedules as the Engineer may reasonably require.

15.06. **FINAL PAYMENT.** If, on the basis of his observation and review of the Work during construction, his final inspection and his review of the final Application for Payment, all as required by the Contract Documents, the Engineer is satisfied that the Work has been completed and the Contractor has fulfilled all of his obligations under the Contract Documents, he will, within ten days after receipt of the final Application for Payment, present the Application to the Owner for Payment. Thereupon the Engineer will give written notice to the Contractor that the Work is acceptable subject to the provisions of the paragraph regarding waiver of claims. Otherwise, he will return the Application to the Contractor, indicating in writing his reasons for refusing to recommend final payment, in which case the Contractor shall make the necessary corrections and resubmit the Application. The Owner shall, within thirty days of presentation to him of the final Application for Payment, pay the Contractor the entire sum found to be due after deducting all amounts to be retained under any provision of the Contract Documents.

15.07. **CONTRACTOR'S CONTINUING OBLIGATION.** The Contractor's obligation to perform the Work and complete the Project in accordance with the Contract Documents shall be absolute. Neither recommendation of any progress or final payment by the Engineer, nor the issuance of a certificate of Substantial Completion, nor any payment by the Owner to the Contractor under the Contract Documents, nor any use or occupancy of the Project or any part thereof by the Owner, nor any act of acceptance by the Owner nor any failure to do so, nor any correction of defective Work by the Owner shall constitute an acceptance of Work not in accordance with the Contract Documents.

15.08. **WAIVER OF CLAIMS.** The making and acceptance of final payment shall constitute:

1) a waiver of all claims by the Owner against the Contractor other than those arising from unsettled Liens, from defective Work appearing after final inspection or from failure to comply with the requirements of the Contract Documents or the terms of any special guarantees specified therein, and

2) a waiver of all claims by the Contractor against the Owner other than those previously made in writing and still unsettled.

16.00. SUSPENSION OF WORK AND TERMINATION.

16.01. OWNER MAY SUSPEND WORK. The Owner may, at any time and without cause, suspend the Work or any portion thereof for a period of ninety days by notice in writing to the Contractor, which shall fix the date on which Work shall be resumed. The Contractor shall resume the Work on the date so fixed. The Contractor will be allowed an increase in the Contract Price or an extension of the Contract Time, or both, directly attributable to any suspension if he makes a claim therefor as provided in these General Conditions.

16.02. OWNER MAY TERMINATE. If the Contractor is adjudged a bankrupt or insolvent, or if he makes a general assignment for the benefit of his creditors, or if a trustee or receiver is appointed for the Contractor or for any of his property, or if he files a petition to take advantage of any debtor's act, or to reorganize under the bankruptcy or similar laws, or if he repeatedly fails to supply sufficient skilled workmen or suitable materials or equipment, or if he repeatedly fails to make prompt payments to Subcontractors or for labor, materials or equipment or if he disregards laws, ordinances, rules, regulations or orders of any public body having jurisdiction, or if he disregards the authority of the Engineer, or if he otherwise violates any provision of the Contract Documents, then the Owner may, without prejudice to any other right or remedy and after giving the Contractor and his Surety seven days written notice, terminate the services of the Contractor and take possession of the Project and of all materials, equipment, tools, construction equipment and machinery thereon owned by the Contractor, and finish the Work by whatever method he may deem expedient. In such case the Contractor shall not be entitled to receive any further payment until the Work is finished. If the unpaid balance of the Contract Price exceeds the direct and indirect costs of completing the Project, including compensation for additional professional services, such excesses shall be paid to the Contractor. If such costs exceed the unpaid balance, the Contractor shall pay the difference to the Owner. Such costs incurred by the Owner shall be incorporated in a Change Order.

1) Where the Contractor's services have been so terminated by the Owner, said termination shall not affect any rights of the Owner against the Contractor then existing or which may thereafter accrue. Any retention or payment of monies by the Owner due the Contractor will not release the Contractor from liability.

2) Upon seven days written notice to the Contractor, the Owner may, without cause and without prejudice to any other right or remedy, elect to abandon the Project and terminate the Agreement. In such case, the Contractor shall be paid for all Work executed and any expense sustained plus a reasonable profit.

16.03. CONTRACTOR MAY STOP WORK OR TERMINATE. If, through no act or fault of the Contractor, the Work is suspended for a period of more than ninety days by the Owner or under an order of court or other public authority, or the Engineer fails to act on any Application for Payment within thirty days after it is submitted, or the Owner fails to pay the Contractor any sum recommended by the Engineer or awarded by arbitrators within thirty days of its approval and presentation, then the Contractor may, upon seven days written notice to the Owner and Engineer, terminate the Agreement and recover from the Owner payment for all Work executed and any expense sustained plus a reasonable profit. In addition and in lieu of terminating the Agreement, if the Engineer has failed to act on an Application for Payment or the Owner has failed to make any payment as aforesaid, the

Contractor may upon seven days notice to the Owner and Engineer stop the Work until he has been paid all amounts then due.

17.00. ARBITRATION.

Except as otherwise required by the Supplementary Conditions, all claims, disputes and other matters in question arising out of, or relating to, this Agreement or the breach thereof except for claims which have been waived by the making or acceptance of final payment, shall be decided by arbitration in accordance with the Construction Industry Arbitration Rules of the American Arbitration Association then obtaining. This agreement so to arbitrate shall be specifically enforceable under the prevailing arbitration law. The award rendered by the arbitrators shall be final, and judgment may be entered upon it in any court having jurisdiction thereof.

Notice of the demand for arbitration shall be filed in writing with the other party to the Agreement and with the American Arbitration Association, and a copy shall be filed with the Engineer. The demand for arbitration shall be made within thirty days after the Engineer has rendered his decision where applicable, and in all other cases within a reasonable time after the claim, dispute, or other matter in question has arisen, and in no event shall it be made after institution of legal or equitable proceedings based on such claim, dispute or other matter in question would be barred by the applicable statute of limitations.

The Contractor will carry on the Work and maintain the progress schedule during any arbitration proceedings, unless otherwise agreed by him and the Owner in writing.

18.00. ENVIRONMENTAL REQUIREMENTS.

The Contractor, when constructing a project involving trenching and/or other related earth excavation, shall comply with the following environmental constraints and be required to install appropriate erosion control devices as determined by the City of Bloomington, which may include, but not be limited to the placement of inlet protection, silt fencing, check dams, temporary seeding and/or mulching. All costs for this work shall be included in the cost of the base bid with work performed by the contractor to ensure that all erosion in contained on site.

18.01. WETLANDS. The Contractor, when disposing of excess, spoil, or other related earth construction materials on public or private property, shall not fill in or otherwise convert wetlands

18.02. FLOODPLAINS. The Contractor, when disposing of excess, spoil, or other related earth construction materials on public or private property, shall not fill in or otherwise convert 100 year flood plain areas delineated on the latest FEMA Floodplain Maps.

18.03. HISTORIC PRESERVATION. Any excavation by the Contractor that uncovers an historical or archaeological artifact shall be immediately reported to the City Engineer's Office. Construction shall be temporarily halted pending the notification process and further directions issued by the City after consultation with the State Historic Preservation Officer (SHPO).

18.04. ENDANGERED SPECIES. The Contractor shall comply with the Endangered Species Act, which provides for the protection of endangered and/or threatened species or their critical habitat be brought to the attention of the contractor, the contractor shall immediately report this evidence to the City Engineer. Construction shall be temporarily halted pending the notification process and further directions issued by the OWNER after consultation with the U.S. Fish and Wildlife Service.

19.00. MISCELLANEOUS.

19.01. **GIVING NOTICE.** Whenever any provision of the Contract Documents requires the giving of written notice it shall be deemed to be validly given if delivered in person to the individual or to a member of the firm or to an officer of the corporation for whom it is intended, or if delivered at or sent by first class, registered or certified mail, postage prepaid, to the business address provided on the Contractual Agreement.

19.02. **COMPUTATION OF TIME.** Computation of time shall be set forth by the number of calendar days allowed for in the contract agreement. Calendar days shall consist of Monday through Friday excluding Saturday, Sunday, and City of Bloomington observed holidays. The usage of Indiana Department of Transportation (I.N.D.O.T.) standard specifications with regard to time usage or computation does not apply to this contract and therefore is not applicable.

19.03. **ADDITIONAL SPECIFICATION REQUIREMENTS.** Areas of work not covered under Special Conditions will be required to meet specifications covered in applicable sections of Indiana Department of Transportation Specifications 2010 Edition (or latest edition and supplement at time of bid) for the installation and placement of materials to ensure quality workmanship. INDOT Specifications shall not be interpreted to contradict current Public Works, or Bloomington Utility Specifications which shall override and supersede INDOT Specifications.

SECTION VIII
SPECIAL CONDITIONS

SPECIAL CONDITIONS

GENERAL

These Supplemental Conditions amend or supplement the General Conditions and other provisions of the Contract Documents as indicated below. All provisions which are not so amended or supplemented remain in full force and effect.

The terms used in these Supplemental Conditions will have the meanings indicated in the General Conditions. Additional terms used in these Supplemental Conditions have the meanings indicated below, which are applicable to both the singular and plural thereof.

ARTICLE 4 – AVAILABILITY OF LANDS; PHYSICAL CONDITIONS; REFERENCE POINTS

SC - 4.02

In the preparation of Drawings and Specifications, ENGINEER or ENGINEER'S Consultants have relied upon the following reports of explorations and tests of subsurface conditions at the Site:

Geotechnical Evaluation; Cascades Trail, Bloomington, Indiana prepared by Earth Exploration, Inc. This report is included in this project manual.

This report is not part of the Contract Documents, and the "technical data" contained therein upon which CONTRACTOR may rely as identified and established above are incorporated therein by reference. CONTRACTOR is not entitled to rely upon other information and data utilized by ENGINEER and ENGINEER's Consultants in the preparation of Drawings and Specifications.

SC – 5.03

With respect to insurance required by this Paragraph include as additional insured (subject to any customary exclusion in respect of professional liability:

Monroe County and its Commissioners
Eagle Ridge Civil Engineering Services, LLC
Bledsoe, Riggert and Guerretaz, Inc.
Earth Exploration, Inc.

and any other persons or entities identified in the Instructions for Bidders all of whom shall be listed as additional insured, and include coverage for the respective officers and employees of all such additional insureds.

SC – 6.13

With the respect to this section, the Engineer shall be defined as Eagle Ridge Civil Engineering Services, LLC, its subconsultants, agents, owners and employees.

SECTION IX

SAMPLE AGREEMENT

CITY OF BLOOMINGTON
parks and recreation

AGREEMENT

BETWEEN

DEPARTMENT OF PARKS AND RECREATION
BOARD OF PARK COMMISSIONERS
AND

_____Company Name_____

FOR

PROJECT NO. BPR 2011-##

THIS AGREEMENT, executed by and between the City of Bloomington, Indiana, Department of Parks and Recreation (hereinafter CITY), and _____**Company Name**_____ , (hereinafter CONTRACTOR);

WITNESSETH THAT:

WHEREAS, CITY desires to retain CONTRACTOR'S services for **CASCADES TRAIL PHASE 1: Club House Drive to Stone Mill Road**, Project No. BPR 2011-## and

WHEREAS, CONTRACTOR is capable of performing the construction of:

- Approximately 4,500' of 8' wide paved asphalt recreational trail;
- Replacement of all signal poles and equipment at the intersection of Old SR 37/Walnut Street to modernize facilities and to accommodate crosswalks and pedestrian actuation/indicators;
- Construction of a new single-span, steel-truss pedestrian bridge, 90' long with a clear width of 10', including cast in place abutments on driven piles;
- A 25' reinforced concrete box culvert extension with minimum opening size of 8' wide and 2' tall, and a 32'extension of a culvert with a 24" RC Pipe.

- Removal of over 400' of guardrail and installation of 2 Type O.S. End Treatments on existing guardrails.
- Replacement of gates and fencing at the Cascades Softball Fields with new 48" black vinyl coated chain link fence.
- Other miscellaneous and related work include clearing, excavation, borrow, rough and finish grading, topsoiling, mulched seeding; pedestrian safety railings, collapsible bollards, new trail and street signage (both post and signal-mounted), and pavement markings; tree removal, brush clearing and planting of new trees; minor concrete work including curbs, sidewalks and drive; and coordination with utilities.
- Compliance with the terms of permits from IDNR Construction in a Floodway, and IDEM for Erosion Control.

and

WHEREAS, CONTRACTOR was determined to be the lowest responsible and responsive bidder for said project.

NOW, THEREFORE, in consideration of the mutual promises hereinafter enumerated, the parties agree as follows:

ARTICLE 1. TERM

1.01 This Agreement shall be in effect upon execution of this Agreement by all parties.

ARTICLE 2. SERVICES

2.01 CONTRACTOR shall achieve Substantial Completion of the work required under this Agreement within seventy-five (75) calender days from the written Notice to Proceed. Substantial Completion shall mean the completion of clearing, rough grading, asphalt and concrete paving, signal installation, bridge and culvert construction. Final Completion shall be achieved within 30 days of substantial completion. Final Completion shall include ALL work under this Agreement including the completion of finish grading and seeding, tree planting, signage and pavement markings, unless, at the Owner's sole discretion, it deems it is the Owner's best interests to waive some completion requirements for better weather.

2.02 It is hereby understood by both parties that time is of the essence in this Agreement. Failure of CONTRACTOR to complete all work as herein provided will result in monetary damages to CITY. It is hereby agreed that CITY will be damaged for every day the work has not been performed in the manner herein provided and that the measure of those damages shall be determined by reference to the then current INDOT Schedule of Liquidated Damages for Each Day of Overrun in Contract Time. CONTRACTOR agrees to pay CITY said damages or, in the alternative, CITY, at its sole

discretion, may withhold monies otherwise due CONTRACTOR. It is expressly understood by the parties hereto that these damages relate to the time of performance and do not limit CITY's other remedies under this Agreement, or as provided by applicable law, for other damages.

2.03 CONTRACTOR agrees that no charges or claims for damages shall be made by him for any delays or hindrances, from any cause whatsoever during the progress of any portion of the services specified in the Agreement. Such delays or hindrances, if any, may be compensated for by an extension of time for a reasonable period as may be mutually agreed upon between the parties, it being understood, however, that permitting CONTRACTOR to proceed to complete any service, or any part of the services / project, after the date to which the time of completion may have been extended, shall in no way operate as a waiver on the part of CITY of any of its rights herein.

ARTICLE 3. COMPENSATION

3.01 CONTRACTOR shall provide services as specified in Attachment A, "Scope of Work", attached hereto and incorporated into this Agreement.

3.02 Upon the submittal of approved claims, CITY shall compensate CONTRACTOR in lump sum of _____ ($.).
CITY may withhold payment, in whole or in part, to the extent necessary to protect itself from a loss on account of any of the following:

Defective work.
Evidence indicating the probable filing of claims by other parties against CONTRACTOR which may adversely affect CITY.
Failure of CONTRACTOR to make payments due to subcontractors, material suppliers or employees.
Damage to CITY or a third party.

3.03 The submission of any request for payment shall be deemed a waiver and release by CONTRACTOR of all liens and claims with respect to the work and period to which such payment request pertains except as specifically reserved and noted on such request.

3.04 CONTRACTOR shall maintain proper account records for the scope of all services of this Agreement and provide an accounting for all charges and expenditures as may be necessary for audit purposes. All such records shall be subject to inspection and examination by CITY's representatives at reasonable business hours.

3.05 CONTRACTOR shall submit time sheets (WH-347) for his own and all subcontracted employees, to City Engineer or his representative for approval and review, including review for compliance with Prevailing Wage requirements.

ARTICLE 4. GENERAL PROVISIONS

4.01 CONTRACTOR agrees to indemnify and hold harmless CITY and its officers, agents, officials and employees for any and all claims, actions, causes of action, judgments and liens arising out of any negligent act or omission by CONTRACTOR or any of its officers, agents, officials, employees, or subcontractors or any defect in materials or workmanship of any supply, materials, mechanism or other product or service which it or any of its officers, agents, officials, employees, or subcontractors has supplied to CITY or has used in connection with this Agreement and regardless of whether or not it is caused in part by a party indemnified hereinunder. Such indemnity shall include attorney's fees and all costs and other expenses arising therefrom or incurred in connection therewith and shall not be limited by reason of the enumeration of any insurance coverage required herein.

4.02 Abandonment, Default and Termination

4.02.01 CITY shall have the right to abandon the work contracted for in this Agreement without penalty. If CITY abandons the work described herein, CONTRACTOR shall deliver to CITY all surveys, notes, drawings, specifications and estimates completed or partially completed and these shall become the property of CITY. The earned value of the work performed shall be based upon an estimate of the proportion between the work performed by CONTRACTOR under this Agreement and the work which CONTRACTOR was obligated to perform under this Agreement. This proportion shall be mutually agreed upon by CITY and CONTRACTOR. The payment as made to CONTRACTOR shall be paid as a final payment in full settlement of his services hereunder.

4.02.02 If CONTRACTOR defaults or fails to fulfill in a timely and proper manner the obligations pursuant to this Agreement, CITY may, after seven (7) days' written notice has been delivered to CONTRACTOR, and without prejudice to any other remedy it may have, make good such deficiencies and may deduct the cost thereof from the payment then or thereafter due to CONTRACTOR. In the alternative, CITY, at its option, may terminate this Agreement and take possession of the site and of all materials, equipment, tools and construction equipment and machinery thereon owned by CONTRACTOR, and may finish the project by whatever method it may deem expedient, and if the such action exceeds the unpaid balance of the sum amount, CONTRACTOR or his surety, shall pay the difference to CITY.

4.02.03 Default: If CONTRACTOR breaches this Agreement or fails to perform the work in an acceptable manner, he shall be considered in default. Any one or more of the following will be considered a default:

1. Failure to begin the work under this Agreement within the time specified.
2. Failure to perform the work with sufficient supervision, workmen, equipment and materials to insure prompt completion of said work within the time limits allowed.
3. Unsuitable performance of the work as determined by CITY ENGINEER or his representative.
4. Neglecting or refusing to remove defective materials or failure to perform anew such work as shall have been rejected.
5. Discontinuing the prosecution of the work or any part of it.
6. Inability to finance the work adequately.
7. If, for any other reason, CONTRACTOR breaches this Agreement or fails to carry on the work in an acceptable manner.

4.02.04 CITY shall send CONTRACTOR a written notice of default. If CONTRACTOR, or his Surety, within a period of ten (10) days after such notice, fails to remedy the default, then CITY shall have full power and authority, without violation of the Contract, to take the prosecution of the work out of the hands of said CONTRACTOR, to appropriate or use any or all materials and equipment on the ground as may be suitable and acceptable, and may, at its option, turn the work over to the Surety, or enter into an agreement with another Contractor for the completion of the Contract according to the terms and provisions thereof, or CITY may use such other methods as, in its opinion, shall be required for the completion of said Contract in an acceptable manner.

4.02.05 All cost of completing the work under the Contract shall be deducted from the monies due or which may become due to said CONTRACTOR. In case the expenses so incurred by CITY shall be less than the sum which would have been payable under the Contract if it had been completed by said CONTRACTOR, CONTRACTOR shall be entitled to receive the difference. However, in case such expense shall exceed the sum which would have been payable under the Contract, CONTRACTOR and his Surety will be liable and shall pay to CITY the amount of said excess. By taking over the prosecution of the work, CITY does not forfeit the right to recover damages from CONTRACTOR or his Surety for his failure to complete the work in the time specified.

4.02.06 Notwithstanding any other provision of this Agreement, if funds for the continued fulfillment of the Agreement by CITY are at any time not forthcoming or are insufficient, through failure of any entity to appropriate the funds or otherwise, then CITY shall have the right to terminate this Agreement without penalty by giving prior written notice documenting the lack of funding in which

instance, unless otherwise agreed to by the parties, this Agreement shall terminate and become null and void.

4.02.07 CITY agrees that it will make its best effort to obtain sufficient funds, including but not limited to, including in its budget for each fiscal period during the term hereof a request for sufficient funds to meet its obligations hereunder in full.

4.03 Successors and Assigns

4.03.01 Both parties agree that for the purpose of this Agreement, CONTRACTOR shall be an Independent Contractor and not an employee of CITY.

4.03.02 No portion of this Agreement shall be sublet, assigned, transferred or otherwise disposed of by CONTRACTOR except with the written consent of CITY being first obtained. Consent to sublet, assign, transfer, or otherwise dispose of any portion of this Agreement shall not be construed to relieve CONTRACTOR of any responsibility of the fulfillment of this Agreement.

4.04 Extent of Agreement: Integration

4.04.01 This Agreement consists of the following parts, each of which is as fully a part of this Agreement as if set out herein:

1. This Agreement
2. Proposal Form and Unit Prices, as applicable
3. Instructions to Bidders
4. Invitation to Bidders
5. CONTRACTOR'S submittals
6. Specifications
7. The current Indiana Department of Transportation Standard Specifications and the latest addenda
8. All plans as provided for the work that is to be completed

4.04.02 In resolving conflicts, errors, discrepancies and disputes concerning the Scope of Work to be performed by CONTRACTOR, and other rights and obligations of CITY and CONTRACTOR, the document expressing the greater quantity, quality or other scope of work in question, or imposing the greater obligation upon CONTRACTOR and affording the greater right or remedy to CITY shall govern; otherwise the documents shall be given precedence in the order as enumerated above.

4.05 Insurance

4.05.01 CONTRACTOR shall, as a prerequisite to this Agreement, purchase and thereafter maintain such insurance as will protect him from the claims set forth below which may arise out of or result from CONTRACTOR'S operations under this Agreement, whether such operations be by CONTRACTOR or by any SUBCONTRACTORS or by anyone directly or indirectly employed by any of them, or by anyone for whose acts any of them may be liable:

Coverage		Limits
A.	Worker's Compensation & Disability	Statutory Requirements
B.	Employer's Liability Bodily Injury by Accident	$100,000 each accident
	Bodily Injury by Disease	$500,000 policy limit
	Bodily Injury by Disease	$100,000 each employee
C.	Commercial General Liability (Occurrence Basis) Bodily Injury, personal injury, property damage, contractual liability, products-completed operations, General Aggregate Limit (other than Products/Completed Operations)	$1,000,000 per occurrence and $2,000,000 in the aggregate
	Products/Completed Operation	$1,000,000
	Personal & Advertising Injury Limit	$1,000,000
	Each Occurrence Limit	$1,000,000
	Fire Damage (any one fire)	$50,000
D.	Comprehensive Auto Liability (single limit, owned, hired and non-owned)	$1,000,000 each accident
	Bodily injury and property damage	
E.	Umbrella Excess Liability	$5,000,000 each occurrence and

aggregate

The Deductible on the Umbrella Liability shall not be more than $10,000

4.05.02 CONTRACTOR'S comprehensive general liability insurance shall also provide coverage for the following:

1. Premises and operations;

2. Contractual liability insurance as applicable to any hold-harmless agreements;

3. Completed operations and products; which also must be maintained for a minimum period of two (2) years after final payment and CONTRACTOR shall continue to provide evidence of such coverage to CITY on an annual basis during the aforementioned period;

4. Broad form property damage - including completed operations;

5. Fellow employee claims under Personal Injury; and

6. Independent Contractors.

With the prior written approval of CITY, CONTRACTOR may substitute different types or amounts of coverage for those specified as long as the total amount of required protection is not reduced.

4.05.04 Certificates of Insurance showing such coverage then in force (but not less than the amount shown above) shall be on file with CITY prior to commencement of work. These Certificates shall contain a provision that coverages afforded under the policies will not be canceled or non renewed until at least sixty (60) days' prior written notice has been received by CITY. The CITY shall be named as an additional insured on the Commercial General Liability, Automobile Liability, and Umbrella Excess Liability policies. The CONTRACTOR shall agree to a waiver of subrogation on its Worker's Compensation policy.

4.06 **Necessary Documentation** CONTRACTOR certifies that it will furnish CITY any and all documentation, certification, authorization, license, permit or registration required by the laws or rules and regulations of the City of Bloomington, the State of Indiana and the United States. CONTRACTOR further certifies that it is now and will maintain in good standing with such governmental agencies and that it will keep its

license, permit registration, authorization or certification in force during the term of this Agreement.

4.07 Applicable Laws CONTRACTOR agrees to comply with all federal, state, and local laws, rules and regulations applicable to CONTRACTOR in performing work pursuant to this Agreement, including, but not limited to, discrimination in employment, prevailing wage laws, conflicts of interest, public notice, accounting records and requirements. This Agreement shall be governed by the laws of the United States, and the State of Indiana, and by all Municipal Ordinances and Codes of the City of Bloomington. Venue of any disputes arising under this Agreement shall be in the Monroe Circuit Court, Monroe County, Indiana.

4.08 Non-Discrimination

4.08.01 CONTRACTOR and subcontractors shall not discriminate against any employee or applicant for employment, to be employed in the performance of this Agreement, with respect to hire, tenure, terms, training, conditions or privileges of employment, because of race, sex, color, religion, national origin, ancestry, age, handicap, or disabled veteran status. Breach of this covenant may be regarded as a material breach of the Agreement.

4.08.02 CONTRACTOR certifies for itself and all its subcontractors compliance with existing laws of the State of Indiana and the United States regarding:

1. Prohibition of discrimination in employment practices on the basis of race, sex, color, religion, national origin, ancestry, age, handicap, or any other legally protected classification;

2. The utilization of Minority and Women Business Enterprises. CONTRACTOR further certifies that it:
   a. Has formulated its own Affirmation Action plan for the recruitment, training and employment of minorities and women, including goals and timetable; which has been approved by the City's Contract Compliance Officer.

   b. Encourages the use of small business, minority-owned business and women-owned business in its operations.

4.08.03 FURTHER, PURSUANT TO INDIANA CODE 5-16-6-1, CONTRACTOR AGREES:

A) That in the hiring of employees for the performance of work under this Agreement or any subagreement hereunder, no contractor, or subcontractor, nor any person acting on behalf of such CONTRACTOR or subcontractor, shall by reason of race, sex, color, religion, national origin,

ancestry, or any other legally protected classification, discriminate against any citizen of the State of Indiana who is qualified and available to perform the work to which the employment relates.

B) That no contractor, subcontractor, or any person on their behalf, shall, in any manner, discriminate against or intimidate any employee hired for performance of work under this Agreement on account of race, religion, color, sex, national origin, ancestry, handicap, or any other legally protected classification.

C) That there may be deducted from the amount payable to CONTRACTOR, by CITY, under this Agreement, penalty of Five Dollars ($5.00) for each person for each calendar day during which such person was discriminated against or intimidated in violation of the provisions of this Agreement. Any such person discriminated against retains the right to file a discrimination complaint with the appropriate civil rights agency or court.

D) That this Agreement may be canceled or terminated by CITY and all money due or to become hereunder may be forfeited, for a second or any subsequent violations of the terms or conditions under this section of the Agreement.

4.09 Workmanship and Quality of Materials

4.09.01 CONTRACTOR shall guarantee the work for a period of one (1) year from the date of substantial completion. Failure of any portion of the work within one (1) year due to improper construction, materials of construction, or design may result in a refund to CITY of the purchase price of that portion which failed or may result in the forfeiture of CONTRACTOR's Performance Bond.

4.09.02 OR EQUAL: Wherever in any of the Contract Documents an article, material or equipment is defined by describing a proprietary product, or by using the name of a manufacturer or vender, the term "Or Equal" or the term "The Equivalent" if not inserted, shall be implied, and it is done for the express purpose of establishing a basis of durability and efficiency and not for the purpose of limiting completion. Whenever material or equipment is submitted for approval as being equal to that specified, the submittal shall include sufficient information and data to demonstrate that the material or equipment conforms to the Contract requirements. The decision as to whether or not such material or equipment is equal to that specified shall be made by the ENGINEER. The approval by the ENGINEER of alternate material or equipment as being equivalent to that specified, shall not in any way relieve CONTRACTOR of responsibility for failure of the material or equipment due to faulty design, material, or workmanship, to perform the function required by the Contract

Documents. Specifications as determined by other entities within the City of Bloomington such as City Utilities shall only be substituted or changed by their approval which shall be submitted in writing to the ENGINEER.

4.09.03 CITY shall be the sole judge of the sufficiency of workmanship and quality of materials. Disputes shall be resolved by the Director of Public Works and are not subject to arbitration.

4.10 **Safety**. CONTRACTOR shall be responsible for the safety of employees at all times and shall provide all equipment necessary to insure their safety. CONTRACTOR shall ensure the enforcement of all applicable safety rules, regulations, ordinances and laws, whether federal, state or local. Contractor's Superintendent of Safety shall make daily inspections upon the arrival and leaving of the site at the close of each workday.

4.11 Amendments/Changes

4.11.01 Except as provided in Paragraph 4.11.02, this Agreement may be amended only by written instrument signed by both CITY and CONTRACTOR.

4.11.02 Without invalidating the Agreement and without notice to any surety, CITY may at any time or from time to time, order, in writing, additions, deletions or revisions in the work. Upon receipt of any such document, CONTRACTOR shall promptly proceed with the work involved, which will be performed under the applicable conditions of the Contract Documents.

4.11.03 If CONTRACTOR believes that any direction of CITY under paragraph 4.11.02, or any other event or condition, will result in an increase in the Contract time or price, he shall file written notice with CITY no later than twenty (20) days after the occurrence of the event giving rise to the claim and stating the general nature of the claim with supporting data. No claim for any adjustment of the Contract time or price will be valid if not submitted in accordance with this Paragraph.

4.11.04 CONTRACTOR shall carry on the work and adhere to the progress schedule during all disputes or disagreements with CITY. No work shall be delayed or postponed pending resolution of any dispute or disagreement except as CONTRACTOR and CITY may otherwise agree in writing.

4.12 Performance Bond and Payment Bond

4.12.01 CONTRACTOR shall provide CITY with a Performance Bond and Payment Bond in the amount of one hundred percent (100%) of the contract amount.

4.12.02 Failure by CONTRACTOR to perform the work in a timely or satisfactory fashion may result in forfeiture of CONTRACTOR'S Performance Bond.

4.12.03 If the surety on any bond furnished by CONTRACTOR becomes a party to supervision, liquidation, or rehabilitation action pursuant Indiana Code 27-9 et seq. or its right to do business in the State of Indiana is terminated, CONTRACTOR shall, within thirty (30) days thereafter, substitute another bond and surety, both of which must be acceptable to CITY.

4.13 **Payment of Subcontractors** CONTRACTOR shall pay all subcontractors, laborers, material suppliers and those performing services to CONTRACTOR on the project under this Agreement. CITY may, as a condition precedent to any payment hereunder, require CONTRACTOR to submit satisfactory evidence of payments of any and all claims of subcontractors, laborers, material suppliers, and those furnishing services to CONTRACTOR. Upon receipt of a lawful claim, CITY shall withhold money due to CONTRACTOR in a sufficient amount to pay the subcontractors, laborers, material suppliers, and those furnishing services to CONTRACTOR.

4.14 **Written Notice** Written notice shall be considered as served when delivered in person or sent by mail to the individual, firm, or corporation, or to the last business address of such known to CONTRACTOR who serves the Notice. Notice shall be sent as follows:

TO CITY: TO CONTRACTOR:

, Project Manager		Contact Person
City of Bloomington, Showers City Hall		Company Name
401 N. Morton, Suite 250		Address
Bloomington, Indiana 47402		City, State Zip Code

4.15 **Severability and Waiver** In the event that any clause or provision of this Agreement is held to be invalid by any court of competent jurisdiction, the invalidity of such clause or provision shall not affect any other provision of this Agreement. Failure of either party to insist on strict compliance with any provision of this Agreement shall not constitute waiver of that party's right to demand later compliance with the same or other provisions of this Agreement.

4.16 **Notice to Proceed** CONTRACTOR shall not begin the work pursuant to the "Scope of Work" of this Agreement until it receives an official written Notice to Proceed from the City Engineer. Contractor shall start active and continuous work on the contract within fifteen (15) calendar days after the date of the Notice to Proceed. In no case shall work begin prior to the date of the Notice to Proceed. If a delayed starting date is indicated in the proposal, the fifteen (15) calendar day limitation will be waived. Work day charges will then begin on a date mutually agreed upon, but not later than the

delayed starting date specified. In the event that any contract is canceled after an award has been made but prior to the issuing of the Notice to Proceed, no reimbursement will be made for any expenses accrued relative to this contract during that period.

4.17 Steel or Foundry Products

4.17.01 To comply with Indiana Code 5-16-8, affecting all contracts for the construction, reconstruction, alteration, repair, improvement or maintenance of public works, the following provision shall be added: If steel or foundry products are to be utilized or supplied in the performance of any contract or subcontract, only domestic steel or foundry products shall be used. Should CITY feel that the cost of domestic steel or foundry products is unreasonable; CITY will notify CONTRACTOR in writing of this fact.

4.17.02 Domestic Steel products are defined as follows:
"Products rolled, formed, shaped, drawn, extruded, forged, cast, fabricated or otherwise similarly processed, or processed by a combination of two (2) or more of such operations, from steel made in the United States by open hearth, basic oxygen, electric furnace, Bessemer or other steel making process."

4.17.03 Domestic Foundry products are defined as follows:
"Products cast from ferrous and nonferrous metals by foundries in the United States."

4.17.04 The United States is defined to include all territory subject to the jurisdiction of the United States.

4.17.05 CITY may not authorize or make any payment to CONTRACTOR unless CITY is satisfied that CONTRACTOR has fully complied with this provision.

IN WITNESS WHEREOF, the parties of this Agreement have hereunto set their hands.

DATE: _____

	Company Name
City of Bloomington **Department of Parks and Recreation** **Board of Park Commissioners**	Address City, State Zip Code
BY:	BY:
_____ John Carter, President Date Board of Park Commissioners	_____ Contractor Representative Date
_____ Mick Renneisen, Director Date Parks and Recreation	_____ Printed Name
_____ Mark Kruzan, Mayor Date City of Bloomington	_____ Title of Contractor Representative

CITY OF BLOOMINGTON
Legal Department
Reviewed By:
_____
DATE:_____

SECTION X

SPECIFICATIONS

SPECIFICATIONS

TABLE OF CONTENTS

Section:	Description:	Page:
01010	Summary of Work	TS-2
01250	Schedule of Values	TS-9
01300	Submittals	TS-10
01360	Alterations	TS-15
01400	Testing Laboratory Services and Material Approval	TS-18
01500	Temporary Construction Facilities and Utilities	TS-21
01550	Protection of Environment and Erosion Control	TS-24
01700	Project Closeout and Record Documents	TS-30
02200	Site Preparation	TS-32
02300	Excavation, Trenching, Backfill and Grading	TS-35
02600	Storm Sewer	TS-43
02700	Concrete Curbs, Gutter, Sidewalks and Ramps	TS-45
02900	Landscaping	TS-48
05600	Tubular Steel Pedestrian/Bicycle Safety Railing	TS-54
34400	Traffic Signal Equipment	TS-55
N/A	Pedestrian Bridge and Abutments Design and Construction	TS-57

SECTION 01010
SUMMARY OF WORK

PART 1 GENERAL

1.01 SUMMARY

A. Description

The project shall include, but is not limited to, the construction of:

- Approximately 4,500’ of 8’ wide paved asphalt recreational trail;
- Replacement of all signal poles and equipment at the intersection of Old SR 37/Walnut Street to modernize facilities and to accommodate crosswalks and pedestrian actuation/indicators;
- Construction of a new single-span, steel-truss pedestrian bridge, 90’ long with a clear width of 10’, including cast in place abutments on driven piles;
- A 25’ reinforced concrete box culvert extension with minimum opening size of 8’ wide and 2’ tall, and a 32’extension of a culvert with a 24” RC Pipe.
- Removal of over 400’ of guardrail and installation of 2 Type O.S. End Treatments on existing guardrails.
- Replacement of gates and fencing at the Cascades Softball Fields with new 48” black vinyl coated chain link fence.
- Other miscellaneous and related work include clearing, excavation, borrow, rough and finish grading, topsoiling, mulched seeding; pedestrian safety railings, collapsible bollards, new trail and street signage (both post and signal-mounted), and pavement markings; tree removal, brush clearing and planting of new trees; minor concrete work including curbs, sidewalks and drive; and coordination with utilities.
- Compliance with the terms of permits from IDNR Construction in a Floodway, and IDEM for Erosion Control.

Project is along Old SR 37 from Club House Drive (in Lower Cascades Park) to Stone Mill Road, including the crossing of North Walnut Drive in Bloomington, Indiana.

B. Measurement and Payment:

Work specified in the drawings, specifications and the contract documents, and other work which may be incidental to the denoted work, shall be included as part of contract lump sum price.

Alternate prices, where designated on the Bid Form, shall be provided.

Supplemental Unit Prices, where designated on the Bid Form, shall be provided.

1.02 DEFINITIONS

A. CBU Specifications: "City of Bloomington Utilities – Construction Specifications for Wastewater, Water, and Storm Projects". Current edition as of Bid date.

B. Standard Specifications: "Indiana Department of Transportation (INDOT) Standard Specifications," dated 2010, including supplements effective as of the Bid Date.

1.03 FORM OF SPECIFICATIONS

A. These Specifications are written in imperative and abbreviated form. Imperative language of Specification sections is directed at CONTRACTOR, unless specifically noted otherwise. Incomplete sentences in Specifications shall be completed by inserting "shall," "CONTRACTOR shall," "shall be," and similar mandatory phrases by inference in same manner as they are applied to notes on Drawings. Except as worded to contrary, perform indicated requirements whether stated imperatively or otherwise.

B. Specifications or requirements of one or more sections may apply or be referenced in other sections.

C. Provide Work described and comply with requirements stated unless specifically assigned to other Contractors, Utilities or OWNER.

1.04 PRECEDENCE OF SPECIFICATIONS

A. It is intended that all specifications and drawings are complementary and describe complete work. A requirement appearing in one shall be considered to appear in all. In the event of a discrepancy, the following precedence shall apply (in order from most to least important):

1. Permits granted specifically for this project by City, State or Federal Regulatory Agencies.
2. Instructions to Bidders
3. Technical Specifications and other project-specific requirements published in the Project Manual.
4. Project Drawings
5. Special Conditions, if applicable.
6. General Conditions.
7. Construction Specifications published by City of Bloomington.
8. INDOT Standard Specifications

On issues where all other specifications listed are silent, the INDOT Standard Specifications shall be the default specifications to apply.

1.05 USE OF INDOT AND CITY OF BLOOMINGTON STANDARDS

A. The following work (materials and workmanship) shall be governed by the INDOT Standard Specifications:

1. Common Excavation (Section 203.02)
2. Rock Excavation (Section 203.03)
3. Erosion Control (Section 205)

4. Pavement Subbase (Section 304)
5. Bituminous Paving (Section 402)
6. Concrete Pavement (Section 502)
7. Guardrail (Section 601)
8. Concrete Sidewalks (Section 604)
9. Curbs (Section 605)
10. Traffic Signs, Barricades (Section 801)
11. Other work not specified in these Technical Specifications or in the plans

B. The following work (materials and workmanship) shall be governed by the CBU Specifications:

1. Storm Manholes and Inlets
2. Storm Sewer Piping

1.06 UTILITY COORDINATION & RELOCATIONS

A. **DUKE ENERGY**:

1. The City of Bloomington owns the power pole near the Cascades Softball Fields that is in conflict with the new trail. CONTRACTOR is to relocate the electric service cables, metering equipment, and related items to EITHER a new pole designated for this purpose, or onto an existing pole owned by Duke Energy that is adjacent to the pole that must be removed. Either solution is to be coordinated by the CONTRACTOR with Duke, and is to be completed by the CONTRACTOR or CONTRACTOR may have Duke do this work at the CONTRACTOR's expense. CONTRACTOR shall coordinate for disconnection and reconnection of power by Duke.

CONTRACTOR will inform the ENGINEER of its intent and any new pole shall be at a location agreed to by the ENGINEER.

2. Duke Energy owns poles and overhead power lines that run along the south side of Old SR 37 in the proximity of the proposed bridge. The proposed bridge construction will require work in the proximity of these lines. The final setting of the prefabricated bridge is expected to require the bridge to be lifted OVER the cables and then set in place on new abutments south of these utility lines. CONTRACTOR is required to coordinate directly with Duke Energy regarding this work. Duke has stated that they intend to de-energize and/or ground the lines, and that they will require a Duke representative be on site during bridge setting. All costs related to this coordination with Duke and for any temporary work by Duke to facilitate the operations of the CONTRACTOR shall be borne by the CONTRACTOR.

B. **AT&T**

AT&T also owns cables on the poles along the south side of Old SR 37 noted in 1.06.A.2 above. CONTRACTOR shall coordinate with AT&T about its operations and bear any costs thereof, if applicable.

C. **Other Utilities**: Buried and pole-mounted utilities are present in all of the project areas. In all cases, these lines are to be protected. NO UTILITY RELOCATIONS with the exception of those impacts noted above are anticipated with this project.

1.07 CONTRACTOR'S USE OF PREMISES

A. Contact Indiana Underground and other utility locating services as required by law in the locality of the project.

B. Contractor shall comply with all applicable laws, ordinances, rules, regulations and lawful orders of any public authority having jurisdiction for the safety of persons or property or to protect them from injury or loss. He shall erect and maintain, as required by existing conditions and progress of work, all reasonable safeguards for safety and protection including posting danger signs and other warnings against hazards. All requirements of the Occupational Safety and Health Act are to be followed explicitly and are the responsibility of the Contractor.

C. Assume full responsibility for protection and safekeeping of products under this Contract.

D. Use areas which are shown as right of way or City-owned property on the Drawings. Obtain and pay for use of additional storage or Work areas needed for operations at no additional cost to OWNER.

E. Confine removal operations to areas within limits indicated. Do not disturb portions of site beyond areas in which Work is indicated.

F. Keep driveways, roads, and entrances serving the area clear and available to OWNER and public at all times, except as noted on the Plans. Do not use these areas for parking or storage of materials. Schedule deliveries to minimize space and time requirements for storage of materials and equipment on sites. CONTRACTOR may use closed portions of streets for short-term storage of materials so long as public will not be using the area during construction. Appropriate traffic control measures must be used at all times when lanes are restricted.

G. CONTRACTOR may park vehicles inside the workzone at their own discretion and as the work allows. OWNER has land along Old SR 37 south of the Softball Fields that CONTRACTOR may use for storage and staging, but at the CONTRACTOR's sole risk. Owner cannot guarantee the security of items placed there by Contractor.

1.08 CONSTRUCTION PHASING AND MAINTENANCE OF TRAFFIC AND ACCESS

A. Provide for public access to the area during construction.

B. Provide for necessary utility relocations and allow continuity of utility service.

C. Flow of vehicular traffic in the street alongside the project area must be maintained except as noted in the Plans. CONTRACTOR must complete work from within the designated work areas.

1.09 EASEMENTS, LICENSES, AND PERMITS

A. Copies of any permit approvals obtained by the Contractor will be made available to the OWNER.

B. Obtain Improvement Location Permit if required.

C. Comply with provisions of easements, licenses, and permits.

D. Obtain construction licenses or permits necessary to complete Work. CONTRACTOR shall obtain any and all permits required by Monroe County for the temporary closure of Old SR 37 east of Walnut Street, including work near the new bridge.

E. Perform construction within existing rights-of-way or within limits of easements and construction licenses.

F. Obtain written authorization from affected property owners or maintaining authorities if construction is outside these areas. Comply with requirements of owners or maintaining authorities.

G. Obtain written approval of restoration from easement and construction license grantors shown on Drawings in the form of a "Property Release" in accordance with the following:

1. Notify property owners of restoration completion by certified mail (return receipt requested, with copy to OWNER) similar to following:

   "The undersigned CONTRACTOR has completed restoration of construction site on which you have granted easement or license for installation of certain utilities and improvements. If site restoration is not completed to your satisfaction, please contact City of Bloomington Engineering Department, Attn: Justin Wykoff, 401 N. Morton St., Suite 130, Bloomington, Indiana 47404, in writing, and arrangements will be made immediately to view site and restore site in conformance with our Contract obligations.

   If City of Bloomington Engineering Department does not hear from you in writing within 5 days from above date, site restoration of your property will be deemed completed and acceptable to you."
   (Signature)
   (Name of CONTRACTOR)
   (Address of CONTRACTOR)
2. Complete Work necessary to satisfy terms of Contract.
3. Failure of property owner to notify OWNER within 5 days, in accordance with above example, does not relieve CONTRACTOR of any obligations under Contract.
4. OWNER will:
   a. Examine site upon receipt of notice of deficiency.
   b. Have right to have remaining Work done by contract or force account and deduct cost thereof from moneys due CONTRACTOR should CONTRACTOR refuse to complete restoration Work.
   c. Waive requirement for obtaining statement if satisfied restoration completed in accordance with Contract Documents.

1.10 STAKING

A. All staking shall be accomplished by, and at the expense of, the CONTRACTOR.
B. Verify layout information shown on the Drawings, in relation to the property survey and existing benchmark before proceeding to layout the work. Locate and protect existing benchmark and control points. Preserve permanent reference points during construction.
C. ENGINEER will provide electronic files of the site plans to the CONTRACTOR in electronic format to assist them in doing layout work.

1.11 NOTIFICATION

A. The CONTRACTOR will be responsible for contacting the following at least 48 HOURS PRIOR to beginning Work (including delivery of materials).

-

		PHONE	FAX
____	**Mayor's Office**	349-3406	349-3455
____	**Council Office**	349-3409	349-3443
XX	**Public Works**	349-3410	349-3443
XX	**Utilities Dept.**	339-1444	331-5962
XX	**City Police**	349-4477	349-3353
____	**IU Police**	855-4111	855-1496
XX	**Monroe Sheriff**	349-2534	349-2828
XX	**City Fire Dept.**	332-9763	
____	**Perry Twp. Fire**	334-7026	336-1166
XX	**Blgtn. Twp. Fire**	339-1115	339-1120
____	**Van Buren Fire**	825-9500	825-9700
XX	**Ambulance**	336-9894	336-9204
____	**State Highway Dept.**	332-1411	332-3368
____	**Ellettville Sta. #8**	876-4819	876-8322
____	**IU President**	855-4613	855-9586
____	**Jeff Kaden**	855-7030	855-8207
____	**City Transit**	332-5688	332-3660
____	**IU Campus Bus**	855-8384	855-5984
XX	**MCCSC Busses**	330-7719	330-7791
XX	**Monroe County**	349-2555	349-2837
XX	**Herald-Times**	332-4401	331-4383
XX	**Daily Student**	855-0763	855-8009
XX	**Cable TV**	332-9486	330-0107
XX	**WTTS/WGTC**	332-3366	331-4570
XX	**WBWB**	332-9292	336-7000
XX	**WFIU**	855-1357	855-5600

XX **Underground Locations** 1-800-382-5544

EMERGENCY

Duke Energy 1-812-337-3035
Vectren 1-800-666-2853
...after hours 1-800-284-4295
AT&T 1-800-480-8088
Dispatch 812-556-3220
Repair 812-556-3000

Additional notices must be given 24 HOURS PRIOR to the day any street is closed or any utility is temporarily out of service.

1.12 PROJECT MEETINGS

A. If requested by Owner, CONTRACTOR will schedule and conduct a **construction progress meeting every two weeks** for the duration of the project. Owner will designate invitees.

1.13 SALES TAX EXEMPTION

Owner is exempt from sales tax on products permanently incorporated in the work. Obtain sales tax exemption certificate number from the Office of the City Controller, 812) 349-3412. Upon completion of the work, file with the Owner, a notarized statement that all purchases made under exemption certificate were entitled to be exempt. Pay legally assessed penalties for improper use of certificate number

PART 2 PRODUCTS
(Not Used)

PART 3 EXECUTION
(Not Used)

* * * END OF SECTION * * *

SECTION 01250
SCHEDULE OF VALUES

PART 1 GENERAL

1.01 SUMMARY

A. Submit Schedule of Values.

B. Upon request of ENGINEER or OWNER, support values with data.

1.02 REQUIREMENTS FOR SCHEDULE OF VALUES

A. Provide schedule on 8-1/2 in. by 11 in. paper. CONTRACTOR's standard forms will be considered for approval by ENGINEER upon CONTRACTOR's request.

B. Identify value of component portions of Work in sufficient detail to serve as basis for computing values for progress payments.

C. Provide separate listing of items of General Requirements such as bonds, insurance premiums, mobilization, supervision and layout, temporary construction facilities, contingency, construction schedule, O&M data, record drawings, and submittals.

D. Use CSI format (by Division) to list component items.

E. For each division, list subvalues of major materials, equipment or work.

F. For Various Portions of Work:

1. Each item shall include directly proportional amount of CONTRACTOR'S overhead and profit.
2. For items on which progress payments will be requested for stored materials, break down value into:
   a. Cost of materials, delivered and unloaded, with taxes paid.
   b. Total installed value including CONTRACTOR'S overhead and profit.

G. Sum of values listed in schedule shall equal total Contract lump sum.

PART 2 PRODUCTS

(Not Used)

PART 3 EXECUTION

(Not Used)

* * *END OF SECTION * * *

SECTION 01300
SUBMITTALS

PART 1 GENERAL

1.01 SUMMARY

Section includes requirements for submittals including schedules, shop drawings, product data, samples, construction videotaping and photographs, schedule of values, and others.

1.02 PROGRESS SCHEDULES

A. Prepare and submit Construction Progress Schedule in accordance with General Conditions.

B. **No Work shall be done between 7:00 p.m. and 8:00 a.m., nor on Sundays or holidays without written approval from OWNER. Emergency work may be done without prior permission. Night work will NOT be allowed.**

C. Prepare schedules in form of horizontal bar (Gantt) chart with a separate horizontal bar for each operation, listed in order of start date.

D. Schedule:

1. Show complete sequence of work.
2. Show dates for beginning and completion of each major work element. Elements shall include, as applicable, the following:

    a. Shop Drawing submittal, review by ENGINEER, and return to supplier.
    b. Material and equipment order, manufacturer, delivery.
    c. Performance tests and supervisory services activity.
    d. Sanitary sewer, storm sewer, watermain, and other utility installation.
    e. Excavation, backfilling, paving.
    f. Landscaping work
    g. Subcontractor's items of Work.
    h. Restoration.
    i. Final cleanup.
    j. Miscellaneous items.

E. Revisions:

1. Every 30 days or as needed to reflect changes in progress.
2. Indicate progress of each activity at date of submittal.
3. Show changes occurring since previous submittal.
    a. Changes in scope.
    b. Activities modified since previous submittal.
    c. Revised projections of progress and completion.

4. Provide narrative report as needed to define following.
    a. Problem areas, anticipated delays, and impact on schedule.
    b. Corrective action recommended and its effect.

c. Effect of changes on schedules of other contractors.

1.03 SHOP DRAWINGS AND PRODUCT DATA

A. Submit in a timely manner, allowing reasonable review time, so not to delay work by contractor or subcontractor.

B. CONTRACTOR'S Responsibilities:

1. Review Shop Drawings and product data prior to submittal.
2. Determine and verify following.
   a. Field measurements.
   b. Field construction criteria.
   c. Catalog numbers and similar data.
   d. Conformance with Specifications.

3. Coordinate each submittal with requirements of Work and Contract Documents.
4. Notify ENGINEER in writing of deviations from requirements of Contract Documents.
5. Begin no fabrication or Work requiring submittals until return of submittals with ENGINEER approval.
6. Designate in Progress Schedule, dates for submittal and receipt of reviewed shop drawings and samples.

C. Submittals shall contain:

1. Date of submittal and dates of previous submittals.
2. Project name and number.
3. Names of:
   a. CONTRACTOR.
   b. Supplier and/or Manufacturer.
4. Identification of product, with identification numbers, and Drawing and Specification section numbers.
5. Field dimensions, clearly identified.
6. Identify details required on Drawings and in Specifications.
7. Show manufacturer and model number, give dimensions, and provide clearances.
8. Relation to adjacent or critical features of Work or materials.
9. Applicable standards, such as ASTM or Federal Specification numbers. Identification of deviations from Contract Documents.
10. Identification of revisions on resubmittals.
11. **8 in. by 3 in. blank space for CONTRACTOR and ENGINEER stamps.**
12. **CONTRACTOR'S stamp, signed, certifying to review of submittal, verification of products, field measurement, field construction criteria, and coordination of information within submittal with requirements of Work and Contract Documents.**

D. Resubmittal Requirements:

1. Comply with submittal requirements.
2. Make corrections or changes in submittals required by ENGINEER. Resubmittals required until approved.
3. Identify on transmittal form submittal is resubmission.

4. Shop Drawings and Product Data:
   a. Revise initial drawings or data and resubmit as specified for initial submittal.
   b. Indicate changes made other than those requested by ENGINEER.

E. Distribute reproductions of Shop Drawings and copies of product data which carry ENGINEER'S stamp approval to following.

1. Jobsite file.
2. Record documents file.
3. Other affected Contractors.
4. Subcontractors.
5. Supplier or fabricator.

F. ENGINEER'S Duties:

1. Review submittals in accordance with schedule.
2. Affix stamp and signature, and indicate approval or requirements for resubmittal.
3. Return submittals to CONTRACTOR for distribution or for resubmittal.

1.04 TEST RESULTS AND CERTIFICATIONS

A. Submit test results and certifications required in Specification sections for review of conformance with specified requirements and information.

B. Submit test results upon completion of test or submittal of results from testing laboratory.

1.05 OPERATIONS AND MAINTENANCE DATA (O&M Data)

A. Submit bridge manufacturer's guide for maintenance on the bridge.
B. Submit O&M Data for traffic signal and related equipment.

1.06 PRECONSTRUCTION VIDEO AND PICTURE RECORD AND CONSTRUCTION PHOTOGRAPHS

Prior to construction work commencement, prepare a detailed video taping and photographic log of the pre-construction condition of the project site.

1. Prepare a walkthrough video taping of the project area, narrated as necessary to set location. Discuss specific defects noted.
2. Take color photographs of special features, defects or areas of special concern to supplement video taping.
3. Provide OWNER a copy of the videotapes and photographs for their records.
4. After coordination with OWNER and property owners, prepare same survey of buildings that may be impacted. Enter buildings and record condition of spaces.
5. Conduct this survey to the full limits that are to be disturbed, and include face of all buildings nearest or adjacent to this limit.
6. Invite ENGINEER to participate in this pre-construction recording/photography as an additional witness. ENGINEER is an agent of the OWNER.

1.07 GUARANTEE, WARRANTIES, MAINTENANCE AGREEMENTS AND BONDS

A. Refer to Specification sections and Contract Documents for requirements.

1.08 ENGINEER'S ACTION

A. ENGINEER'S Action:

1. General:

a. ENGINEER will review each submittal, mark with action, and return. Where submittal must be held for coordination, ENGINEER will so advise CONTRACTOR.
b. ENGINEER will stamp each submittal with action stamp, marked with submittal action.

2. Notification of Insufficient Information:

a. If information submitted is not sufficient to complete review, ENGINEER will notify CONTRACTOR that additional information is required.
b. Submittal will not be returned. Submittal will be placed in an "on hold" status until CONTRACTOR provides additional information.

B. Action Stamp:

1. Approved: Where submittals are marked as "Approved," Work covered by submittal may proceed provided it complies with Contract Documents. Acceptance of Work depends on that compliance.

2. Approved As Noted: When submittals are marked as "Approved As Noted," Work covered by submittal may proceed provided it complies with ENGINEER'S notations and with Contract Documents. Acceptance of Work depends on compliance. Resubmittal not required.

3. Not Approved: When submittals are marked as "Not Approved," do not proceed with Work covered by submittal. Work covered by submittal does not comply with Contract Documents. Prepare new submittal complying with Contract Documents.

4. Revise and Resubmit: When submittals are marked as "Revise and Resubmit," do not proceed with Work covered by submittal. Do not permit Work covered by submittals to be used at Project site or elsewhere where Work is in progress. Revise submittal or prepare new submittal in accordance with ENGINEER'S notations. Resubmit without delay. Repeat if required to obtain different action marking.

PART 2 PRODUCTS (Not Used)

PART 3 EXECUTION

3.01 SUBMITTAL REQUIREMENTS

A. Provide complete copies of required submittals as follows.

1. Construction Progress Schedule:

   a. 2 copies of schedule and each revision.
2. Shop Drawings and Product Data: 5 copies.
3. Test Results: 2 copies.
4. Construction Video and Photos: 1 copy of each.
5. Other Submittals:
   a. 5 copies if required for review.
   b. 3 copies if required for record.

* * * END OF SECTION * * *

SECTION 01360
ALTERATIONS

PART 1 GENERAL

1.01 SUMMARY

A. Section Includes:

1. Alterations:

a. Cutting, moving or removal of items as shown on Drawings .
b. Cutting, moving or removal of items not shown to be cut, moved or removed, but which must be cut, moved or removed to allow new Work to proceed. Patch or reinstall Work or items which are to remain in finished Work after cutting, moving or removal, and make joints and finishes match adjacent or similar Work.
c. Removal of abandoned items and removal of items serving no useful purpose, such as abandoned piping and electrical conduit.
d. Repair or removal of dangerous or unsanitary conditions.
e. Removal of unsuitable or extraneous materials not marked for salvage.
f. Uncovering Work for installation of ill-timed Work.
g. Removal and replacement of defective Work and Work not conforming to Contract Documents.
h. Uncovering Work to provide observation by ENGINEER or inspection or tests by others.
i. Removal of samples of installed materials for testing.

1.02 ALTERATIONS, CUTTING, AND PROTECTION

A. Survey and record condition of existing facilities to remain in-place that may be affected by work. After alteration Work is complete, survey conditions again and restore existing facilities to pre-alteration condition.

B. Perform Work of moving, removal, cutting, and patching with trades qualified to perform Work in manner causing least damage to each type of Work.

1. Cut finish surfaces such as masonry, tile, plaster or metals, by methods to terminate surfaces in straight line at natural point of division.
2. Protect existing finishes, equipment, and facilities which are to remain.

C. Protect existing and new Work from weather and extremes of temperature. Provide weather protection, waterproofing, heat, and humidity control as needed to prevent damage to remaining existing and new Work.

D. Provide shoring, needling, and bracing to keep building(s) or structures structurally secure and free of damaging deflection for installation of new structural members.

E. Do not pile material to endanger building or structure.

1.03 PROTECTION AND CONTINUITY OF UTILITIES AND OPERATIONS

A. Protect existing utilities so they will continue to function during and after work.

B. Where conflict with utilities occurs, cooperate with OWNER of utility and alter facility to eliminate conflict if necessary.

C. Service Continuity:

1. Provide and maintain continuous electrical, plumbing, and HVAC services to functioning portions of process, building, facilities, or areas during hours normally in use.
2. Temporary outages are permitted during cutover Work at such times and places as can be pre-arranged with OWNER. Keep such outages to minimum number and length of time. Make no outages without prior approval.
3. Include costs for temporary equipment, materials, and Work required in Contract Price.
4. Remove temporary equipment and materials when no longer required or at completion of Work.

1.04 TEMPORARY ELECTRICAL AND MECHANICAL SERVICES

A. Comply with Section 01500.

PART 2 PRODUCTS

2.01 PRODUCTS FOR PATCHING, EXTENDING, AND MATCHING

A. Provide same products, salvaged materials, types of construction or finish as that in existing structure, as needed to patch, extend or match existing Work.

B. Generally, Contract Documents will not define products or standards of workmanship present in existing construction; determine products by inspection and necessary testing and workmanship by use of existing as sample of comparison.

PART 3 EXECUTION

3.01 PREPARATION

A. CONTRACTOR shall remove foreign substances such as grease, sludge, and odoriferous material.

3.02 TEMPORARY ENCLOSURES

A. Exterior: Provide temporary fencing or enclosures for successive areas as Work progresses, to provide:

1. Acceptable working conditions.
2. Weather protection for materials.
3. Discourage entry of unauthorized persons.

B. Erect 4' tall plastic construction fencing at locations designated on plans. Use in-ground posts in locations except on pavement where posts are to be placed in temporary inserts or stands.

3.03 REMOVAL OR RELOCATION OF MATERIALS AND EQUIPMENT

A. Where existing materials and equipment are removed or relocated, remove materials no longer used such as studs, straps, conduits, ducts, wires, anchors, and supports. Remove or cut off concealed or embedded conduit, boxes or other materials and equipment to at least 3/4 in. below final finished surface.

B. Repair affected surfaces to conform to type, quality, and finish of adjacent surfaces.

3.04 CUTTING AND PATCHING

A. Inspect existing conditions of Work, including components subject to damage or movement during cutting, patching, excavating or backfilling.

B. After uncovering Work, inspect conditions affecting installation of new products.

C. Do not cut or notch structural members without specific written approval of ENGINEER.

3.05 CLEANING

A. Perform periodic and final cleaning. Clean spillage, overspray, and heavy collection of dust in OWNER-occupied areas immediately.

B. At completion of alterations Work in each area, provide final cleaning and return space to condition suitable for use by OWNER.

C. Remove debris from site each day. Removed material, except that listed or marked by ENGINEER for retention, becomes property of CONTRACTOR.

* * * END OF SECTION * * *

SECTION 01400
TESTING LABORATORY SERVICES AND MATERIAL APPROVAL

PART 1 GENERAL

1.01 PERFORMANCE REQUIREMENTS

A. Employ and pay for services of independent testing laboratory approved by OWNER to perform testing as described in Specifications. Employment of laboratory shall, in no way, relieve CONTRACTOR's obligations to perform Work of Contract.

B. Related Requirements in Other Parts of Contract Documents: Conduct inspections and testing required by laws, ordinances, rules, regulations, orders or approvals of public authorities, Conditions of Contract.

C. Testing Requirements and Frequency of Tests:

1. The testing and material approval requirements for the work included in the Contract are as follows:

a. **Concrete for Curbs, Sidewalks and Drives**:

1) Mix Design, Admixtures, Aggregates and Cement – from INDOT pre-approved list and/or certified aggregate producers
2) Liquid Membrane Curing Materials – Type C Certification or INDOT pre-approved list.

b. **Reinforced Concrete Pipe / Precast Box Structures**

1) From INDOT Certified Precast Concrete Pipe Supplier, or provide Type A Certification per INDOT Standard Specifications.

c. **Structural Backfill / B-Borrow / Pipe Bedding and other Engineered Fill Materials**

1) Gradation – Material from an INDOT Certified Aggregate Producer, or provide certified material gradation test demonstrating compliance with INDOT material requirements, meeting allowable gradations noted in Section 02300.
2) Density – NOT APPLICABLE.

e. **Compacted Aggregate Base**

1) Gradation – Material from an INDOT Certified Aggregate Producer, or provide certified material gradation test demonstrating compliance with INDOT material requirements, meeting allowable gradations noted in Section 02300.
2) Density – One density test on each lift of compacted aggregate used as base, at the following frequencies:
Drives – 1 per drive
Sidewalk – 1 per 500' of sidewalk, minimum 1 per segment
Trail – 1 per 500' of trail

f. **Topsoil**

1) For every source of topsoil to be used on site, **including in-situ materials**, provide certified laboratory test of topsoil in accordance with Section 02900 that identifies soil amendment needed to meet specifications.

g. **Asphalt Pavement Materials**

1) Source must be a certified producer of HMA materials per INDOT requirements.

g. **Other Materials**

1) Where this Section is silent, approval of other materials will be in accordance with other Sections of these Technical Specifications or with the applicable City or INDOT Standard Specifications. Cast-in-place reinforced concrete bridge abutments shall be in accordance with those specifications.

1.02 QUALIFICATION OF LABORATORY

A. Meet basic requirements of ASTM E329.

B. Licensed to operate in Indiana.

C. Testing Equipment shall be calibrated at reasonable intervals by devices of accuracy traceable to either National Bureau of Standards or other Accepted values.

1.03 LABORATORY DUTIES

A. Cooperate with OWNER and CONTRACTOR; provide qualified personnel to perform Work after due Notice to Proceed.

B. Perform specified inspections, secure samples, and test materials.
1. Comply with specified standards.
2. Ascertain compliance of materials with Contract Documents.

C. Promptly notify OWNER and CONTRACTOR of observed irregularities or deficiencies of Work, equipment or material.

D. Promptly submit written report of each test and inspection; one copy each to ENGINEER, OWNER, material supplier, and CONTRACTOR, and one copy to record document file. Each report shall include

1. Date issued
2. Project title and number.
3. Testing laboratory name, address, and telephone number.
4. Name and signature of laboratory inspector.
5. Date and time of sampling or inspection.
6. Date of test.
7. Identification of product and Specification section.
8. Location of sample or test in Project.

9. Results of tests and compliance with Contract Documents.
10. Interpretation of test results, when requested by ENGINEER.

E. Perform additional tests as required by OWNER or CONTRACTOR.

1.04 LIMITATIONS OF AUTHORITY OF TESTING LABORATORY

A. Laboratory is not authorized to:

1. Release, alter or enlarge on requirements of Contract Documents.
2. Approve any portion of Work.
3. Perform duties of CONTRACTOR.

1.05 CONTRACTOR'S RESPONSIBILITIES

A. Cooperate with laboratory personnel and provide access to Work.

B. Provide to laboratory preliminary design mix proposed to be used for concrete and other material mixes which require control by testing laboratory.

C. Furnish copies of product test reports.

D. Furnish incidental labor and facilities.

1. Provide access to Work to be tested.
2. Obtain and handle samples at Project site or at source of product to be tested.
3. Facilitate inspections and tests.
4. Store and cure test samples.

E. Notify laboratory and OWNER sufficiently in advance of operations to allow for laboratory assignment of personnel and scheduling of tests.

F. Make arrangements with laboratory and pay for additional samples and tests required for CONTRACTOR'S convenience.

G. Employ and pay for services of testing laboratory to perform additional inspection, and testing required when initial tests indicate Work does not comply with Contract Documents.

PART 2 PRODUCTS
(Not Used)

PART 3 EXECUTION
(Not Used)

* * * END OF SECTION * * *

SECTION 01500
TEMPORARY CONSTRUCTION FACILITIES AND UTILITIES

PART 1 GENERAL

1.01 QUALITY ASSURANCE

A. Items provided under this section shall be listed or labeled by UL or other Nationally Recognized Testing Laboratory (NRTL). Term "NRTL" shall be as defined in OSHA Regulation 1910.7. Terms "listed" and "labeled" shall be as defined in National Electrical Code, Article 100.

B. Regulatory Requirements: National Electrical Code (NEC): Components and installation shall comply with National Fire Protection Association (NFPA) 70.

C. Comply with federal, state, and local codes and regulations, and with utility company requirements.

PART 2 PRODUCTS

2.01 TEMPORARY ELECTRICITY AND LIGHTING

A. General:

1. Temporary lighting shall be sufficient to enable CONTRACTOR and Subcontractors to complete Work and enable ENGINEER to observe Work as it is being performed. Illumination shall meet or exceed state code requirements.

B. Responsibilities:

1. Provide, maintain, and remove temporary electric service facilities.
2. Facilities exposed to weather shall be weatherproof type and electrical equipment enclosure locked to prevent access by unauthorized personnel.
3. Pay for installation of temporary services including poles, transformer charges, and metering. Register temporary meter in CONTRACTOR'S name
4. Arrange with local electric utility for temporary electric service subject to their requirements and approval.
5. Provide and maintain lamps, wiring, switches, sockets, and similar equipment required for temporary lighting and small power tools.
6. Pay for electrical energy consumed for construction purposes including operation of ventilating equipment for heating of buildings, and for testing and operating of equipment after permanent wiring has been installed, until final acceptance by OWNER.
7. Provide and pay for service to temporary offices.

2.02 TEMPORARY TELEPHONE SERVICE

Ensure a cell phone is available so the OWNER and ENGINEER may contact CONTRACTOR at any time.

2.03 WATER FOR CONSTRUCTION

A. CONTRACTOR shall make arrangements for water during construction. Water is not available from hydrants unless the Contractor makes its own arrangements with the Water Utility.

C. Use only special hydrant operating wrenches to open hydrants. Make certain hydrant valve is open full. If hydrants are damaged, CONTRACTOR shall be responsible and shall notify appropriate agency so damage can be repaired as quickly as possible. Fire hydrants shall be completely accessible to Fire Department at all times.

2.04 WATER FOR TESTING

CONTRACTOR shall provide water necessary for testing prior to acceptance of Work, unless specifically stated otherwise in Specifications.

2.05 SANITARY FACILITIES

A. No sanitary facilities are available on site.

B. Provide temporary sanitary toilet facilities conforming to state and local health and sanitation regulations, in sufficient number for use of OWNER'S, CONTRACTOR'S and Subcontractor's employees.

C. Maintain in sanitary condition.

2.06 TEMPORARY FIRE PROTECTION

Provide and maintain in working order, minimum of one fire extinguisher on each vehicle or piece of major equipment, and such other fire protective equipment and devices as would be reasonably effective in extinguishing fires by personnel at Project site.

2.07 TEMPORARY SITE AND OTHER ROADS

Maintain public roads used during construction free from accumulations of dirt, mud and construction debris resulting from construction operations. Roads shall be considered "maintained" when material has been removed by a sweeper.

2.08 SECURITY

A. Security will not be provided by OWNER.

B. CONTRACTOR shall be responsible for loss or injury to persons or property where Work is involved, and shall provide security and take precautionary measures to protect CONTRACTOR'S and OWNER'S interests.

2.09 TEMPORARY PARKING

A. There shall be no parking on Project site except within areas that are otherwise unavailable to the public and designated by barricades, drums or workzone fencing. **CONTRACTOR WILL NOT PARK IN DRIVEWAYS, ALLEYS, OR IN SPACES THAT ARE OTHERWISE DESIGNATED FOR LOCAL PUBLIC USE, UNLESS PART OF THE DESIGNATED WORKZONE AND AUTHORIZED BY OWNER.**

2.10 TEMPORARY FENCING

A. If shown, provide and maintain temporary fencing sufficient to discourage trespass by CONTRACTOR onto private property and by public onto construction site.

B. Fencing shall be 4’ plastic construction fencing mounted on temporary posts.

2.11 PROJECT IDENTIFICATION

Locate any OWNER-provided signs where designated by OWNER.

PART 3 EXECUTION

3.01 GENERAL

Maintain and operate systems to ensure continuous service.

3.02 REMOVAL AND RESTORATION

A. Completely remove temporary materials, equipment, signs, and structures when no longer required.

B. In unfinished areas, clean and repair damage caused by temporary installations or use of temporary facilities, restore drainage, and evenly grade, seed or plant as necessary to provide appearance equal to or better than original.

C. In finished areas, restore existing or permanent facilities used for temporary services to specified, or original condition.

3.03 DAMAGE TO EXISTING PROPERTY

A. CONTRACTOR is responsible for replacing or repairing damage to existing buildings, structures, sidewalks, roads, pavements, and other existing assets.
* * * END OF SECTION * * *

SECTION 01550
ENVIRONMENTAL PROTECTION AND EROSION CONTROL PLAN

Description

This work shall consist of meeting the requirements of the various federal, state and local regulatory agencies that have jurisdiction over the conduct of the work. CONTRACTOR, in executing Work, shall maintain work areas on and off-site free from environmental pollution that would be in violation of federal, state or local regulations. Section includes detailed requirements for the implementation of the Erosion Control Plan.

Erosion Control Plan for this project has been provided in the Plans and may be implemented by Contractor without modification if desired. Contractor shall be responsible for any subsequent changes or deviations from the plan and for ALL activities conducted off-site from the project area.

Construction Requirements

A. GENERAL.

1. CONTRACTOR, in executing Work, shall maintain work areas on and off-site free from environmental pollution that would be in violation of federal, state or local regulations. Contractor must comply with the terms of all permits granted for the project.

2. Observe rules and regulations of City of Bloomington, Monroe County, State of Indiana and agencies of U.S. Government prohibiting pollution of lakes, streams, rivers or wetlands by dumping of refuse, rubbish, dredge material or debris.

3. Provide measures in accordance with approved Erosion Control Plan and any permits received. When an Erosion Control Permit is in place or needed, CONTRACTOR shall assume the responsibilities of the "Operator", as designated by IDEM and shall be responsible for the full implementation and conduct of the Erosion Control Plan that was submitted to and approved by IDEM to satisfy "Rule 5" requirements on behalf of the City. IDEM's Notice of Sufficiency and attachments, if applicable, are hereby incorporated by reference and are a binding part of the work by the CONTRACTOR.

4. Prevent construction material, pavement, concrete, earth, sediments or other debris from entering storm sewers, inlets, manholes or culverts. Make adjustments to erosion control measures based on actual field performance after consultation with Owner. Follow the Erosion Control Plan, modifying it to site conditions and work sequencing if needed to keep work in compliance with applicable state and local requirements.

B. EROSION CONTROL / PROTECTION OF STORM SEWERS & WATERWAYS

1. SEQUENCING / TIMING REQUIREMENTS OF EROSION CONTROL MEASURES:

a. Discuss the responsibility for implementation of the Erosion Control Plan at the Preconstruction meeting. Identify Contractor's responsible personnel and contact information.

b. Provide a phasing plan of the work to identify what measures need to be in place to provide downstream or down slope protection for each phase.

c. Post applicable permits from all state, local and federal agencies at the site as required.

d. Construction Temporary Gravel Entrances to site as shown on the Plans. Use these for ingress/egress of implementation of all additional measures.

e. **Based on Contractor's work area phasing plan, provide erosion control in the following general sequencing:**

i. Provide erosion control measures, in place, before commencing work on project site (applies to each work area).

ii. Where silt fencing is called for, install it as shown on the plans prior to disturbing upslope areas.

iii. Provide straw bale protection to existing culverts prior to ground disturbance upstream of that culvert

iv. Topsoil shall be removed from areas of construction and stockpiled in a manner that prevents erosion and loss of materials. Topsoil will be redistributed on the project site prior to final grading and seeding. Excess topsoil is to be hauled off site to an approved clean fill facility by the Contractor.

v. When new storm inlets or culverts are installed and in service, place temporary straw bale checks as soon as practicable, but not more than 24 hours after inlet or culvert is placed in service.

vi. Install Straw Bale Ditch Checks in ditches and at the upstream end of culverts within 24 hours of rough grading the ditch or installing the culvert.

vii. Install permanent Geotextile and Riprap at culverts within 48 hours of pipe installation.

viii. Complete temporary or permanent stabilization of slopes greater than 3:1 within 7 calendar days following initial soil disturbance. Stabilize other disturbed or graded areas within 14 calendar days. Permanent stabilization is desirable and shall be installed in these time limits. If permanent seeding cannot be installed, temporary seeding must be installed. Note that no additional payment will be made for Temporary Seeding. Any Temporary Seeding shall be included in the cost of Permanent Seeding.

ix. Prior to suspension of construction operations for appreciable lengths of time, the Contractor shall shape the earthwork in a manner that will permit storm runoff with a minimum of erosion. Unless otherwise provided for in the Contract, temporary erosion control measures will not be paid for directly, but will be

considered as a subsidiary obligation of the Contractor covered under the various Contract items of work.

2. MAINTENANCE OF EROSION CONTROL MEASURES

a. Maintain and replace erosion control measures as needed during construction. Erosion Control Measures will be inspected and repaired as needed at least once a week and after every rain event. Inspect to verify that erosion and sedimentation are being controlled by the measures in use. Implement more aggressive measures if and where needed after consultation with Owner's representative.

b. Maintain erosion control measures until the establishment of permanent, surface stabilization or turf.

c. Maintain access to the site at planned construction entrances only. Prevent tracking of mud, stone, dirt and debris onto public roadways. Clean roads as necessary, but inspect at least once daily. Street cleaning will not be paid for directly, but shall be included in the cost of various items of the Contract.

3. OFFSITE POLLUTION PREVENTION PLAN

a. The Contractor shall provide the offsite pollution prevention plan that addresses all of the following areas outside of right-of-ways: Utility relocation areas, Material hauling and transportation routes/roads, Borrow pit, Temporary staging and material stockpile areas, Temporary disposal areas for waste materials.

b. The offsite pollution prevention plan shall include all applicable maps, drawings and necessary erosion control measures that will be used. **The offsite pollution prevention plan shall be submitted to the Owner and Engineer within 48 hours of receiving notice to proceed.**

4. EROSION CONTROL MATERIAL AND WORKMANSHIP REQUIREMENTS

a. Silt Fencing – per INDOT Standard Specifications Sec. 205 and Standard Drawing E205-TECP-02.
b. Straw Bale Ditch Checks – INDOT Standard Specifications Sec. 205 and Standard Drawing E205-TECD-02
c. Ditch Inlet Protection – Standard Drawing E205-TECI-01, 02 and 03
d. Temporary Seeding – INDOT Standard Specifications Sec. 621.06
e. Permanent Seeding – INDOT Standard Specifications Sec. 621.
f. Riprap, Revetment and Geotextiles - INDOT Standard Specification Sec. 616.
g. Erosion Control Blankets - INDOT Standard Specifications Sec. 621.

5. DISPOSAL OF EXCESS EXCAVATED SOILS AND OTHER WASTE MATERIALS

a. Excess excavated material not required or not suitable for backfill, and other waste material, shall be disposed of in accordance with local regulatory requirements.

b. Provide watertight conveyance for liquid, semi-liquid or saturated solids which tend to bleed during transport. Liquid loss from transported materials is not permitted, whether being delivered to construction site or hauled away for disposal. Fluid materials hauled for disposal must be taken to a site licensed to receive that material.

c. Concrete Washout: Perform washout of concrete trucks offsite or in designated areas only. Do not wash out concrete trucks into storm drains, open ditches, streets or streams. Do not allow excess concrete to be dumped on site, except in designated areas. For on-site washout: locate washout area at least fifty (50) feet from storm drains, open ditches or bodies of water; do not allow runoff from this area by constructing a temporary berm or holding area large enough for liquid and solid waste; wash out wastes into the designated area where the concrete can set and be broken up and then disposed of properly.

6. PROTECTION OF AIR QUALITY

a. Minimize air pollution by requiring use of properly operating combustion emission control devices on construction vehicles and equipment and encourage shutdown of motorized equipment not in use.

b. Do not burn trash on construction site.

c. If temporary heating devices are necessary for protection of Work, they shall not cause air pollution.

7. USE OF CHEMICALS

a. Chemicals used or furnished during construction, whether herbicide, pesticide, disinfectant, polymer, reactant or of other classification, shall be approved by U.S. EPA or U.S. Department of Agriculture or other applicable regulatory agency.

b. Use and disposal of chemicals and residues shall comply with manufacturer's instructions.

8. NOISE CONTROL

a. Conduct operations to cause least annoyance to residents in vicinity of Work, and comply with applicable local ordinances.

b. Equip compressors, hoists, and other apparatus with mechanical devices necessary to minimize noise and dust. Equip compressors with silencers on intake lines.

c. Equip gasoline or oil-operated equipment with mufflers on intake and exhaust lines.

d. Line storage bins and hoppers with material that will deaden sounds.

e. Conduct dumping and carrying rock in trucks so to cause minimum noise and dust.

f. Route vehicles carrying rock, concrete or other material over such streets as will cause least annoyance to public and do not operate on public streets between hours of 7:00 p.m. and 8:00 a.m. unless approved by OWNER.

9. DUST CONTROL

a. Due to close geographic location of project to other off-site facilities take special care in maintaining temporary haul routes, OWNER'S existing roads, and public roads used during construction in clean, dust free condition.

b. Comply with local environmental regulations for dust control. If CONTRACTOR'S dust control measures are considered inadequate by OWNER, OWNER may require CONTRACTOR to take additional dust control measures.

10. LEAKS AND SPILLS OF FUELS AND LUBRICANTS

a. Spill Response: In the event of a spill, Contractor shall immediately take action to prevent the spread of contaminants. While it is difficult to predict the nature and size of a spill, typical containment methods may include placing a temporary berm, emergency trench or other feature to stop and hold the contaminants until appropriate cleanup can occur.

b. Absorbent pads and excavation of contaminated soils to a licensed waste facility are typical measures needed. Perform any cleanup, including those measures directed by jurisdictional agencies, at no cost to the Owner.

c. Contactor will Contact the following agencies as part of the reporting requirements and shall respond and implement any further instructions from these agencies:

d. In the event of real or preceived hazard to health or safety, contact immediately: City of Bloomington - Emergency Services 911
Also contact the following within 2 hours:
City of Bloomington – Department of Public Works, MS4 812-349-3410
Indiana Department of Environmental Management 888-233-7745
Indiana Department of Natural Resources - Division of Water 317-232-4160
Monroe County Soil & Water Conservation District – 812-349-2046

e. Inspect onsite vehicles and equipment daily at the startup for leaks, and repair immediately. Report spills or leaks from fueling equipment or construction equipment to OWNER and cleanup as required. OWNER may require CONTRACTOR to remove damaged or leaking equipment from Project site.

f. Comply with local, state and federal regulations concerning transportation and storage of fuels and lubricants. Properly dispose of used oils, fluids, lubricants

and spill cleanup materials. Do not place used oil in a dumpster or pour into a storm drain or watercourse.

g. Onsite vehicle and equipment fueling should only be used where it is impractical to send vehicles and equipment offsite for fueling. Drip pans and absorbent pads should be used during vehicle and equipment fueling, unless the fueling is performed over an impermeable surface in a dedicated fueling area. Nozzles used in vehicle and equipment fueling should be equipped with an automatic shutoff to control drips. Fueling operations should not be left unattended. Federal, state, and local requirements should be observed for any stationary above ground storage tanks.

h. Do not conduct equipment repairs and maintenance on the project site, except as required to mobilize or recover the equipment to make it possible to transport it to an off-site repair facility. If maintenance must occur on site, the area where repairs are to be made must be located away from drainage courses. Drip pans and/or absorbent pads should be used during vehicle and equipment maintenance work that involves fluids, unless the maintenance work is performed over an impermeable surface in a dedicated maintenance area.

i. If any soils are contaminated with fluids during the construction operation, use absorbent pads or other approved method to remove as much of the material as possible, then remove the soil itself. Transport and dispose of such materials by an approved method and dispose of at a facility licensed to receive such materials.

END OF SPECIAL PROVISION

SECTION 01700
PROJECT CLOSEOUT AND RECORD DOCUMENTS

PART 1 GENERAL

1.01 SUMMARY

A. Maintain at site one record copy of:

1. Drawings.
2. Project Manual.
3. Addenda.
4. Change orders and other modifications to Contract.
5. ENGINEER or OWNER field orders, written instructions, or clarifications.
6. Approved submittals.
7. Field test records.
8. Construction photographs.
9. Associated permits.

1.02 SUBMITTALS

A. At Substantial Completion, CONTRACTOR shall provided one marked up set of record documents to the OWNER.

PART 2 PRODUCTS

(Not Used)

PART 3 EXECUTION

3.01 MAINTENANCE OF DOCUMENTS AND SAMPLES

A. Store record documents and samples in CONTRACTOR'S office apart from documents used for construction.

1. Provide files and racks for storage of documents.
2. Provide secure storage space for storage of samples.

B. Maintain documents in clean, dry, legible condition and in good order. Do not use record documents for construction purposes.

C. Make documents and samples available for inspection by ENGINEER or OWNER.

D. Failure to properly maintain record documents may be reason to delay a portion of progress payments until records comply with Contract Documents.

3.02 RECORD DOCUMENTS

A. Label each document "PROJECT RECORD" in neat, large printed letters.

B. Annotate a record set of Drawings and Specifications to show all changes made during construction. Graphically depict changes by modifying or adding to each plan sheet(s) affected by changes.

C. Record information concurrently with construction progress.

1. Do not conceal Work until required information is recorded.
2. Record changes made by Written Amendment, Field Order, or Change Order.

D. Drawings and Specifications:

1. Drawings:

a. Mark Drawings with horizontal and vertical locations of underground utilities and appurtenances, referenced to permanent surface improvements.
b. Location of internal utilities and appurtenances concealed in construction, referenced to visible and accessible features of structure.
c. Field changes.
d. Details not on original Drawings.
e. Size of equipment and location including connections.

2. Specifications:

a. Mark Specification sections to show substantial variations in actual Work performed. Give particular attention to substitutions, selection among options and similar information for work that is concealed or cannot otherwise be readily discerned later by direct observation.
b. Note related record drawing information and Product Data.

* * * END OF SECTION * * *

SECTION 02200
SITE PREPARATION

PART 1 – GENERAL

1.01 SUMMARY

Section includes clearing and grubbing of site, stripping topsoil, and removal of miscellaneous surface features.

Contractor shall remove various features from the project area as noted in the plans or as required to complete work noted in the plans. Such work shall be completed as CLEARING RIGHT OF WAY. Items to remove that are included in CLEARING RIGHT OF WAY shall include, but not be limited to: sidewalks, curbs, curb and gutter, pipes, conduits, fences, trees (except those noted for salvage as logs), brush, signs, posts, and pavements of any material. Only items which appear in the Schedule of Pay Items, if applicable, will be paid separately.

PART 2 – PRODUCTS

2.01 FENCE

A. In areas of open excavations and where shown on plans, install a 4’ minimum height industry standard plastic construction fence.

PART 3 – EXECUTION

3.01 PREPARATION

A. Provide notice to owners of utilities minimum 3 working days before starting work. Contact Indiana Underground and other utility locators as required by local law.

B. Protect existing utilities and surface features indicated to remain. Restore damaged existing utilities and surface features to a condition equal to that prior to construction.

C. Protect trees, shrubs, and other plants where indicated to remain. Provide fencing no closer than the “dripline” of the trees and shrubs and of sufficient height so features will not be damaged. Maintain protection and allow no access into the dripline area.

D. Do not remove, cut down or trim trees unless indicated on Drawings. Prevent puddling of water around trees and shrubs. Protect dumping of refuse or storage or handling of chemicals near trees.

E. Prevent dust becoming a nuisance to the public, and to neighbors.

F. Discourage unauthorized access to the site by the public by erecting and maintaining industry standard fencing. Use fencing, cones and other accepted devices to mark off and warn the public of excavations and other hazards.

3.02 REMOVALS

A. Remove obstructions such as mounds of dirt, stone or debris in construction limits.

B. Remove surface features including pavements, curb and gutter, signs, posts, fences, trees, shrubs, landscaping features, and other items as indicated on the drawings.

C. Conform to requirements of Section 202 of the INDOT Standard Specifications.

3.03 CLEARING AND GRUBBING

A. Clearing and grubbing shall include cutting and disposal of trees, brush, logs, and other vegetation, and removal and disposal of roots, stumps, stubs, logs and other timber, and other perishable or objectionable matter.

B. Clear and grub area within limits to be covered with buildings, walks, parking areas, drives, and where grade is to be adjusted.

C. Grub stumps and roots to a depth of at least 12 in. below the existing ground surface or subgrade, whichever is lower.

D. Cut interfering tree roots and branches 1 in. or greater in diameter perpendicular to direction of growth on tree side of trench.

E. Fill depressions caused by clearing and grubbing with satisfactory soil material, unless further excavation is planned.

3.04 STRIPPING TOPSOIL

A. After the area has been cleared of vegetation, strip the existing topsoil to entire depth in areas where grade is to be adjusted and areas to be covered by structures or paving.

B. Stripped topsoil shall be free of clay lumps, sand, gravel, vegetation, and debris. **In-situ topsoil intended for reuse shall be tested in accordance with Section 02900.**

C. Stockpile on site in area clear of new construction and free of vegetation and debris. Store off-site if site does not provide adequate storage space.

D. Maintain the stockpile in a manner which will not obstruct the flow of drainage.
   1. Protect from erosion.
   2. Maintain stockpile free from debris and trash.
   3. Construct piles to freely drain surface water.
   4. Cover piles if necessary to prevent wind-borne dust.

E. OWNER has first right to excess topsoil not used in Work. Obtain OWNER'S approval before removing any topsoil not required for the work.

3.05 DEMOLITION OF MISCELLANEOUS FEATURES

A. Demolition includes cutting and breaking out existing concrete and masonry, and removal of equipment, piping, pavement, utilities, structures, and surface features in direct conflict with Work or required to be demolished as shown on Drawings.

B. Protect utilities, structures, surface features, and facilities which are to remain in-place.

3.05 RESTORATION

A. Restore areas as shown on the plans, incorporating any changes to the areas as shown.

B. Restore existing utilities, surface features, landscaping, and structures to a condition equal to or better than that which existed prior to construction in those areas where no new work or features are shown on the plans or where an area outside the construction limits has been damaged or disturbed by the Contractor's activities.

3.06 DISPOSAL

A. Remove brush, grass, roots, trash, and other material from site. Do not store or permit debris to accumulate on the job site.

B. Dispose of materials removed by in accordance with applicable regulations.

* * * END OF SECTION * * *

SECTION 02300
EXCAVATION, TRENCHING, BACKFILL & GRADING

PART 1 – GENERAL

1.01 SUMMARY

A. Section describes requirement for excavation, filling, and rough and finish grading of the site to the elevations shown on the Drawings and as needed to meet the requirements of the Contract Documents.

B. Section describes the requirements for excavation and backfilling for structures.

1.02 DEFINITIONS

A. Influence Zone Under Footings, Foundations, Pavements, or Sidewalks: Area below foundation or pavement or sidewalk subbase bounded by 1 horizontal to 2 vertical slope extending outward from 1-ft beyond outer edge of foundation or pavement or sidewalk subbase.

B. Influence Zone Under Piping or Electrical Ducts: Area below limits bounded by line 6 in. below pipe or electrical duct and by 1 horizontal to 2 vertical slope extending outward from that line 1-ft beyond outer edge of pipe or duct.

C. Unsuitable Material: Topsoil, peat, organic soils, and materials containing slag, cinders, foundry sand, debris, and rubble or soil with less than required bearing capacity as determined by ENGINEER.

1.03 SUBMITTALS

A. Compaction Test Results with certification that results meet Specifications.

B. One gradation (sieve) analysis for each source of Engineered Fill, Free-Draining Fill, and B-Borrow for Structural Backfill with CONTRACTOR's certification that materials meet specifications..

1.04 QUALITY ASSURANCE

A. Testing shall be by an independent testing laboratory approved by the OWNER in accordance with INDOT Standard Specifications, this section, and Section 01400.

1.05 UTILITY PROTECTION

A. Notify owners of above or below ground utilities encountered during excavation, trenching or grading operations.

B. Cap and remove or relocate services in accordance with instructions of owners of such utilities.

C. Protect, support, and maintain conduits, wires, pipes or other utilities that are to remain in accordance with requirements of owners of such utilities.

PART 2 – PRODUCTS

2.01 FILL MATERIALS

A. Engineered Fill:

1. **Materials meeting the requirements of INDOT Standard Coarse Aggregates No. 2, No. 8 or No. 53 shall be considered to satisfy this specification.**

B. Free-Draining Fill:

1. **Material meeting requirements for Aggregate for Underdrains in the Standard Specifications will be an acceptable substitute for this material.**

C. Flowable Fill: Conform to requirements of Section 213 and related materials specifications in the INDOT Standard Specifications.

D. Pipe Bedding: crushed aggregate meeting requirements for No. 11s or 12s in the Standard Specifications.

E. Earth Fill: Natural soils free of topsoil, wood, peat, cinders, organic and deleterious matter or other rubbish. Acceptable materials include silt, silty clays and clays, including organic clays and silts of medium to high plasticity and liquid limits. Soil types MH, ML, CH and CL are included in this class.

F. For areas 5 feet outside of influence zones as defined above, backfill may include the use of earth fill (to the extent shown on the drawings).

2.02 TOPSOIL

A. Per Section 02900.

2.03 PIPE BEDDING MATERIALS

A. Subgrade stabilization aggregate, if required, shall be INDOT No. 2 crushed stone.

B. Pipe bedding material shall be No 11 or No. 12 Crushed Stone per the plans.

C. Bedding for **manholes** shall be INDOT No. 2 crushed stone.

2.04 SHEETING, SHORING, AND BRACING

A. Type, design, detail, and installation of sheeting, shoring, and bracing shall be determined by and sole responsibility of CONTRACTOR.

PART 3 – EXECUTION

3.01 EXAMINATION

A. Examine the areas and conditions under which work of this Section will be performed. Correct conditions detrimental to timely and proper completion of the Work such as areas loosened by frost or softened by flooding or weather, or existence of unsuitable material. Do not proceed until unsatisfactory conditions are corrected.

B. Proof-roll with a medium-weight roller and examine surfaces to receive fill and subgrades within influence zone to determine existence of soft areas, areas loosened by frost action or softened by flooding, groundwater or weather or existence of unsuitable materials.

3.02 PREPARATION

A. Notify utilities, corporations, companies, individuals, or authorities owning above or below ground conduits, wires, pipes or other utilities running to property or encountered during excavating operations. It will be the utility's responsibility to move conflicting utilities unless otherwise indicated by the ENGINEER.

B. Fill settled areas where excavations or trenches were backfilled and holes made by demolition, tree removal, and site preparation.

C. Proof roll areas to receive fill material to detect soft or loose zones prior to placing fill. Remove and replace soft or loose zones.

D. Natural soils or fill softened by frost, flooding or weather shall be removed and replaced.

E. Remove unsuitable material within influence zone under footings, foundations, pavements, sidewalks, piping or electrical ducts. Remove frozen soils within influence zone. Replace with well-compacted Engineered Fill.

F. Keep construction site free draining.

G. Plow, step, or bench slopes steeper than 1v:4h. Disc level surfaces.

3.03 SHEETING, SHORING, AND BRACING

A. Whenever necessary to prevent caving during excavation and to protect adjacent piping, structures, property, workers, and the public, and where specifically noted herein; excavations shall be sheeted, shored, and braced.

B. When sheeting, shoring, and bracing is required, install to prevent soil from entering excavation below or through sheeting.

C. Keep sheeting, shoring, and bracing in place until structure is placed, tested, and backfilled.

D. Remove sheeting, shoring, and bracing in manner not damaging to structure or permitting voids within backfill. Fill voids with sand or approved material.

E. Fill settled areas after sheeting, shoring, and bracing has been removed.

3.04 ROCK EXCAVATION

A. Rock excavation shall be in accordance with Section 203.03 of the Standard Specifications.

B. Blasting or other use of explosives is NOT allowed.

3.05 DEWATERING

A. CONTRACTOR shall dewater excavation site prior to trenching or excavation and shall maintain groundwater min. 12 in. below bottom of trench or excavation.

B. CONTRACTOR is responsible for choosing method of groundwater control.

C. If CONTRACTOR chooses to use deep wells or well points, wells and well points shall be designed, installed, and operated to prevent removal of in-situ materials.

D. Keep construction site free-draining. Keep excavations free of water.

E. Remove soil disturbed by pressure or flow of groundwater.

F. Maintain dewatering system to prevent uplifting of or damage to structures.

G. Protect adjacent utilities, structures, and properties from damage resulting from dewatering operations.

H. Drill, maintain, and abandon dewatering wells in accordance with federal, state, and local ordinances.

3.06 EXCAVATION

A. Perform excavation to the lines, grades, and elevations indicated and specified herein. **Contractor shall inform the OWNER immediately in the event that soils are suspected to be contaminated by any foreign or potentially hazardous substance.**

B. Method of excavation shall be consistent with soil types encountered and result in undisturbed subgrade. Loosened soils shall be recompacted or removed and replaced.

C. Excavation of Rock:

1. Where rock, boulders, or similar material is encountered, and cannot be removed or excavated by conventional earth moving or ripping equipment, remove or excavate such material by means which will not endanger buildings or structures on or off the site, and only after consultation and approval by OWNER.
2. Do not use explosives.

D. Cut ditches and gutters accurately to the cross sections, grades, and elevations shown.

E. Protect excavated areas from freezing.

F. Trench Tolerances:

1. Maximum width of trench at top of pipe shall be outside diameter of pipe plus 24 in. When sheeting, shoring, and bracing required, width of trench may be increased, provided provisions for excess trench width are met.
2. Where trench width below top of pipe exceeds specified limit, CONTRACTOR shall furnish pipe with strength adequate for actual trench width.
3. Minimum trench width shall be outside diameter of pipe plus 18 in.
4. Top of concrete encasement for electrical duct or top of conduit shall be minimum of 24-in. bellow final grade or as shown on Drawings.

G. Do not excavate within influence zone of existing footings or foundations without prior approval of ENGINEER.

H. Excavation through Rigid Pavement:

1. Remove pavement min 1 ft beyond anticipated edge of excavation.
2. Saw cut pavement to ensure straight joint.
3. Pavement replacement shall match existing.

3.07 FILL USAGE

A. Engineered: Within influence zone under foundations, pavements, sidewalks, piping or electrical ducts.

B. Earth: Other areas not previously specified.

C. Bedding Material:

1. Bedding material shall be placed over the entire width of the trench bottom such that after the pipe has been placed thereon, imbedded to grade and aligned, there remains a 6 inch minimum depth of material below the pipe barrel and a minimum of 5 inches below the bell.
2. Excavate bell holes so that the entire pipe barrel rests on the bedding.

D. Cover Material shall be placed to the limits shown on the drawings.

E. Within <u>pipe trenches</u> under pavements and sidewalks and within piping or electrical duct influence zone, Concrete Class A shall be used.

F. Free-Draining: Where noted in Drawings. (NOT APPLICABLE)

3.08 PLACING FILL

A. Notify ENGINEER before placing fill material.

B. Do not use frozen material or place fill on frozen subgrade.

C. Do not operate power-operated earth moving equipment closer to foundation walls or other structures than distance equal to ½ height of fill above footing.

D. Do not backfill until concrete is properly cured and has reached design strength, coatings approved, and required tests accepted.

E. Place fill against foundation walls enclosing interior spaces after construction such as cross-walls, beams, or slabs are in-place to brace wall and such construction has reached its design strength.

F. Place fill simultaneously on both sides of free standing structures.

G. Where pipes or electrical ducts cross, protect piping or ducts at higher elevation by backfilling within influence zone of higher pipe or duct with INDOT B-Borrow.

H. Where pipes or ducts leave structures, protect by backfilling within influence zone of pipe or duct with INDOT B-Borrow.

I. Stop backfill at specified grade to allow for placing topsoil or sidewalk or pavement subbase.

J. Place and compact fill, bedding and cover materials in lift thickness and to densities listed. Degree of compaction: ASTM D1557, Modified Proctor.
   1. Moisture Content: Within 3% of optimum.

Location	Maximum Lift Thickness (in.)	Modified Proctor (%)
Footing, or Foundation Slab Influence Zone	8	96 min
Floor Slab Influence Zone	8	90 min
Sidewalk, Pavement, Piping, or Electrical Duct Influence Zone	8	95 min
Lawn and Landscaped Areas	12	80 min, 90 max

K. Free-draining fill below tanks and foundations shall be compacted in max 8-in. lifts with min 10-ton smooth vibratory roller. Make a min of 3 passes in each direction. In areas not accessible to roller, compact with equipment acceptable to ENGINEER.

L. Compaction of ANY fill by flooding is not acceptable.

3.09 ROUGH GRADING

A. Grade to 4 in. below finished grade in areas to receive topsoil. Cultivate subgrade to depth of 6” where topsoil is to be placed

B. Grade to bottom of base course in areas to receive sidewalk or paving.

C. Rough grading, including excavated or filled sections and adjacent transition areas, shall be reasonably smooth, compacted, and free from irregular surface changes.

3.10 FINISH GRADING

A. Owner or Engineer must approve subgrade prior to the placement of topsoil.

B. Uniformly grade the areas within limits of grading, including adjacent transition areas, with uniform levels or slopes between points where elevations are shown on the Drawings, or between such points and existing grades.

C. Where a change of slope is indicated on the Drawings, construct a rolled transition section having a minimum radius of approximately 8 ft, unless adjacent construction will not permit such a transition, or if such a transition would not drain properly.

D. Grade areas adjacent to buildings or structures to achieve drainage away from the structures, and to prevent ponding.

E. Maximum allowable variation from design elevation is 1 in. in 10 ft.

F. Use topsoil in relatively dry state. Place during dry weather.

G. Fine grade the topsoil, eliminating rough or low areas to ensure positive drainage. Maintain levels, profiles and contours of the subgrade.

H. Remove stone, roots, grass, weeds, debris and other foreign material while spreading. **All stones over ¾" diameter shall be raked out and removed.**

I. Manually spread topsoil around trees to prevent damage to root systems. Lightly compact the placed topsoil.

3.11 FIELD QUALITY CONTROL

A. Testing:

1. Determine in-place density of fill at maximum intervals specified in accordance with ASTM D1556, D2167, D2922 or D2937.
2. One field density test for each 100 feet of piping, minimum one each lift.
3. One field density test for each 100 cu yds of earth fill.

3.12 DISPOSAL OF EXCESS MATERIALS

A. OWNER has first right to excess material suitable for backfilling or site grading, not used in Work. Deliver to site as determined by OWNER.

B. Remove surplus aggregate, fill and topsoil from site. Dispose of at a location licensed to receive such materials as arranged by CONTRACTOR, in accordance with all applicable federal, state, and local regulations.

3.13 MAINTENANCE

A. Protection of Newly Graded Areas:

1. Protect newly graded areas from traffic and erosion, keep free of trash and weeds.
2. Repair and reestablish grades in settled, eroded, and rutted areas to the specified tolerances.

B. Where completed compacted areas are disturbed by subsequent construction operations or adverse weather, scarify the surface, reshape, and compact to the required density prior to further construction.

* * * END OF SECTION * * *

SECTION 02600
STORM SEWER SYSTEM

PART 1 - GENERAL

1.01 SUMMARY

A. Provide storm and combined sewer system components including inlets, catch basins, manholes, and piping where shown on the Drawings, and as specified herein.

1.02 DEFINITIONS

A. Standard Specifications: INDOT Standard Specifications
B. Construction Specifications: "City of Bloomington Utilities Construction Specifications for Wastewater, Water and Storm Projects", current edition.

1.03 SUBMITTALS

A. For pipes, precast manholes, inlets, catch basins; frames and grates:

1. Manufacturer's specifications and other data needed to prove compliance with the specified requirements.
2. Manufacturer's recommended installation procedures.
3. Provide certification reports attesting that the materials supplied meet the referenced specifications.
4. Shop Drawings for Concrete manholes showing all components to be installed.
5. Inspection reports or televising results as applicable.

B. As-Builts:

1. **Provide as-built data for all piping as installed. Note inverts, locations of structures, and routes of piping and structures if different than shown. Provide as required in Section 01700.**

1.04 QUALITY ASSURANCE

A. Provide inspection of all storm piping, in the form of either inspection by lamping, televising , or visual inspection depending on pipe size in accordance with City Stormwater Standards.

PART 2 - PRODUCTS

2.01 PIPING, MANHOLES, INLETS, CATCH BASINS, FRAMES, GRATES

A. All materials shall be in accordance with INDOT Standard Specifications

B. Storm manholes, catch basins, and inlets are called out on the plans using INDOT Standard nomenclature, where standard-sized structures may be used.

C. Manhole covers shall have the words "STORM SEWER" cast in recessed letters two(2) inches in height.

D. Inlets shall be marked on top with "DO NOT DUMP – DRAINS TO RIVER" or similar as approved by CBU.

E. Contractor shall note that castings must be from **East Jordan Iron Works**.

PART 3 - EXECUTION

3.01 TESTING AND INSPECTING

A. Do not allow or cause any of the work of this Section to be covered up or enclosed until after it has been inspected.

B. Contractor shall correct any noted deficiencies until the City Utilities has granted approval of the work, and has accepted the storm sewerage system into its inventory, if applicable.

C. Provide testing in accordance with City Stormwater and Sanitary Standards, and as described in Quality Assurance.

D. Provide piping inspection reports referenced to adjacent structures.

* * * END OF SECTION * * *

SECTION 02700
CONCRETE CURBS, GUTTERS, SIDEWALKS AND RAMPS

PART 1 - GENERAL

1.01 SUMMARY

A. Section describes requirements for cast-in-place concrete curbs, curb and gutter, curb turnouts, sidewalks, curb ramps and related miscellaneous concrete. **Section also lists the requirements for Detectable Warning Plates that are to be installed in curb ramps.**

1.02 DEFINITIONS

INDOT Specs: Indiana Department of Transportation Standard Specifications, current edition.

1.03 QUALITY ASSURANCE

A. Concrete testing shall be as specified in Section 01400.

PART 2 - PRODUCTS

2.01 FORMS

A. Forms shall conform to the requirements of Sections 604.03(b) and 605.04(b) of the Standards Specifications.

2.02 REINFORCEMENT

A. For curbs: Not applicable.

B. For sidewalks and ramps: Reinforcing shall be polypropylene fibers from Fiber Mesh, Inc., or equal Section 910.01 of the INDOT Specs.

C. Welded wire fabric shall not be used.

2.03 CONCRETE

A. Concrete: Portland Cement Concrete shall be Class “A” concrete, conforming to Section 702 of the INDOT Specs and the requirements of this section. Provide concrete with the compressive strength of at least 4000 psi (tested in accordance with ASTM C 39 for 28 day compressive strength) unless noted otherwise.

B. Curbs and gutters shall be in accordance with the cross-section shown on the plans.

C. Unless otherwise shown on the Drawings, sidewalks and curb ramps shall be a minimum of 4 inches thick, except at driveway crossings, where sidewalks shall be a minimum of 6 inches thick.

2.04 BASE MATERIAL

A. Base Material: Base material shall conform to Section 904.02 of the INDOT Specs for #53 Crushed Stone.

2.05 OTHER MATERIALS

A. Curing Compounds:

1. Curing materials and methods shall meet the requirements of Section 912 of the INDOT Specs.

B. Preformed Expansion Joint Material:

1. Shall meet the requirements of ASTM D 1751.
2. Shall be 1/2" thick and premolded.
3. Shall be in accordance with the cross-section of the curb and gutter, or sidewalks on the plans.

C. Joint Sealant:

Self-leveling polyurethane sealant: Sonneborn's "Sonelastic SLI" ASTM C-920, Type S, Grade P, Class 25, Limestone color, or equal.

D. Detectable Warning Plates shall be by East Jordan Iron Works, model number 7005 in the cast radii listed on the plans.

PART 3 - EXECUTION

3.01 SURFACE CONDITIONS

A. Existing curb or sidewalk which is to remain in place is to be sawcut at a joint nearest the construction limits prior to any adjacent removals.
B. Examine the areas and conditions under which work of this Section will be performed. Correct conditions detrimental to timely and proper completion of the Work. Do not proceed until unsatisfactory conditions are corrected.

3.02 BASE COURSE

A. Prepare in accordance with Standard Specifications.

3.03. MIXING CONCRETE

A. Preparation and mixing of concrete shall be in accordance with Sections 702 for Class A concrete of the INDOT Specs.

3.04 PLACING CONCRETE

A. Placing of concrete shall be in accordance with Sections 604.03 and 605.04 of the Standard Specifications.

3.05 CONSOLIDATION

A. Consolidation and vibration of concrete shall be in accordance with Section 702.20 (b) of the Standard Specifications.

3.06 CONCRETE FINISHING

A. Finishing of concrete curbs (or curbs and gutters) shall be in accordance with Section 702.21 of the Standard Specifications.
B. Install Detectable Warning Plates in the concrete prior to finishing per manufacturer's specifications.

3.07 PROTECTION FROM FREEZING

A. Concrete placed when the atmospheric temperature is 35°F, or is expected to drop below 35°F during the curing period, shall conform to the provisions of Section 702.11 of the INDOT Specs.

3.08 REMEDIAL WORK

A. Repair or replace deficient work as directed by the ENGINEER and at no additional cost to the OWNER.

* * * END OF SECTION * * *

SECTION 02900
LANDSCAPING

PART 1 – GENERAL

1.01 SUMMARY

A. Section Includes:

1. Preparing ground surface.
2. Mulched Seeding
3. Sodding
4. Fertilizer
5. Mulch
6. Maintenance

B. **All areas not paved are to be mulch-seeded or sodded as noted on plans, unless noted otherwise.**

1.02 SUBMITTALS

A. Test Results: Topsoil test results including fertilizer and lime requirements for each source of topsoil.

B. Product Data:
1. Seed: Product tag or manufacturer specification providing complete composition breakdown.
3. Fertilizer: Product tag or manufacturer specification providing complete composition.
4. Mulch: Manufacturer sheet providing complete composition of mulch.
5. Mulch binder: Product specification and written application instructions.

1.03 QUALITY ASSURANCE

A. Seed: Conform to U.S. Department of Agriculture Rules and Regulations under Federal Seed Act and requirements of state seed laws.

B. CONTRACTOR shall engage certified soils testing laboratory to perform a soils evaluation of existing and/or imported topsoil to determine fertilizer and lime requirements. Provide a minimum of 1 composite soil sample, consisting of 3 test borings, for every 5 acres to be seeded or sodded.

1.04 DELIVERY, STORAGE, AND HANDLING

A. Provide seed mixture in sealed containers showing percentage of seed mix, year of production, net weight, date of packaging, and location of packaging.

B. Deliver fertilizer to site in waterproof bags showing weight, chemical analysis, and name of manufacturer.

1.05 WARRANTY

A. Warranty lawn areas for period of 1 yr after acceptance of seeding and sodding to be alive and in satisfactory growth at end of warranty period.

B. For purpose of establishing acceptable standard, scattered bare spots, none larger than 1 sq ft, will be allowed up to a max of 3% of lawn area.

PART 2 – PRODUCTS

2.01 TOPSOIL

A. Obtain topsoil from in-situ source, or provide imported topsoil obtained from sources outside the project limits, or from both sources. Stockpiled topsoil shall be screened to meet specified requirements.

B. Contractor shall engage a certified testing laboratory to test all stockpiled or imported topsoil to ensure it meets above requirements. Also have laboratory determine fertilizer and lime requirements.

C. Topsoil for lawn areas: Friable loam with minimal amounts of clay and free of subsoil, roots, grass, weeds, stones, debris and foreign matter, a pH range of 5.9 to 7.0 and containing a minimum of 6% and a maximum of 25% organic matter.

2.02 SEED

A. Seed Mixes: Fresh, recleaned, new crop seed in specified varieties and proportions indicated.

1. General Mixture: (Use unless otherwise directed by OWNER)
   20% Parade Kentucky Blue Grass
   20% Park Kentucky Blue Grass
   30% Delray Perennial Rye
   30% Pennant Perennial Rye

2.03 SOD

A. Not used

2.04 FERTILIZER

A. Commercial balanced, uniform in composition, free flowing, conforming to state and federal laws.

B. Contain percentage by weight as follows, or as modified by topsoil test recommendations.

1. Prior to seeding or sodding: 6-24-24.
2. After seeding or sodding: 18-5-9.

C. 50% of elements shall be derived from organic sources.

2.05 LIME

A. Ground Limestone containing not less than 85% of total carbonates and ground so that 50% will pass through a 100-mesh sieve and 90% through a 20-mesh sieve.

2.06 ACCESSORIES

A. Mulch: Dry oat or wheat straw or wood cellulose fiber free of weeds and foreign matter detrimental to plant life. Hay or chopped corn stacks are not acceptable.

B. Water: Furnished by CONTRACTOR. Provide pumps, tankage, hose, piping, and attachments as required to bring water to point of use.

C. Erosion Control Blanket: Open weave jute matting or synthetic netting interwoven with wood excelsior fiber.

1. Roll type, consistent thickness with even fiber distribution over entire area.
2. Approximately 1 in. sq mesh, nominal weight 1 lb/sq yd.

D. Landscape Mat: Porous non-woven fabric with multiple layers of randomly arranged fibers, min 4.0 oz/sq yd (typical).

1. Manufacturers:

a. Mirafi 140N by Mirafi, Inc.
b. Typar 340I by DuPont.
c. Supac 5P by Phillips Fibers Corp.
d. Propex 4545 by Amoco Fabrics Co.
e. Or Equal.

E. Steel Edging: 3/16 in. thick by 4 in. deep. (NOT APPLICABLE)

1. Manufacturers:

a. General Edging by J. T. Ryerson & Son.
b. General Edging by Brighton By-Products.

F. Crushed Stone: Washed, light colored crushed granite or other approved locally available stone conforming to ASTM C33, Size 4.

G. Hydro Binder for mulch on mulched-seeding: Commercially produced, mulch binder in accordance with all applicable State and Federal regulations.

PART 3 – EXECUTION

3.01 SURFACE CONDITIONS

A. Examine the areas and conditions under which work of this Section will be performed. Correct conditions detrimental to timely and proper completion of the Work. Do not proceed until unsatisfactory conditions are corrected.

3.02 PLANTING SEASONS

A. Spring Planting Season: From time soil can be satisfactorily worked until following dates. Seed: April 15 to May 30.

B. Fall Planting Season:

Seed: August 15 to September 30.

C. Perform planting of seed only when weather conditions and soil conditions are acceptable.

D. Planting season limits may be changed when approved by ENGINEER.

3.03 PREPARATION

A. Finish grading will be performed under Section 02300.

B. Do not plant seed until trees, shrubs, and other landscaping completed.

C. Scarify existing topsoil where grade is not being raised, or where topsoil is over compacted, to depth of 2 in.

D. For topsoil with high acidity, add lime as recommended in topsoil test report.

E. Grade, rake, and roll with roller weighing not more than 100 lbs/ft or less than 25 lbs/ft.

F. Maximum variation from correct elevation is 1/2 in. in 10 ft.

G. **Owner must approve final grading prior to commencement of seeding operations**.

3.04 FERTILIZING

A. Before seeding, apply fertilizer at uniform rate. Make 2 passes at right angles. Incorporate fertilizer into soil to depth of at least 2 inches by discing, harrowing, or other approved method.

B. After completion of required interim mowings, apply fertilizer. Make 2 passes at right angles.

C. Adjust rate of application and type of fertilizer as recommended in topsoil test report.

D. Lightly water to aid dissipation of fertilizer.

3.05 SEEDING

A. Apply seed at a total rate of not less than 8 lbs/1000 sq ft. Make 2 passes at right angles.

B. Seeding method shall establish smooth, uniform turf.

C. Cover seed with 1/8 in. of soil by light raking.

D. Do not seed following rain, if soil has been compacted by rain, or if ground is too dry.

E. Do not seed when wind velocity exceeds 6 mph.

F. Do not seed areas in excess of that which can be mulched on same day.

G. Immediately after seeding, apply mulch to flat areas and erosion control blanket to slopes.

H. Place mulch loose to allow some sunlight to penetrate and air to circulate, but thick enough to shade ground, conserve soil moisture, and prevent erosion.

I. In all areas not receiving blankets, apply hydro binder material to mulch in accordance with manufacturer's specifications.

J. Butt ends and edges of erosion control blanket snugly and staple to ground surface with 6 in. staples.

K. Apply water with fine spray immediately after area has been mulched or application of erosion control blanket. Leave area thoroughly soaked at close of each working day.

3.06 LAYING SOD

A. Not used

3.07 PROTECTION

A. Protect turf areas by erecting temporary fences, barriers, signs, and similar protection as necessary to prevent trampling until acceptance by OWNER.

B. Replace, repair, restake, or replant damaged seeding or sod.

C. Protect slopes and embankments against erosion until Work is accepted. Repair eroded areas by refilling, resodding, reseeding, and remulching as required.

3.08 FIELD QUALITY CONTROL

A. Acceptance:

1. Notify ENGINEER when lawn areas are ready for final inspection.
2. Substantial completion will be granted upon conformance with the following;

    a. Turf reasonable free from weeds, diseases or other visible imperfections.
    b. Turf displays uniform color, quality and coverage.
    c. Min 3 mowings performed.
    d. Fertilizer application performed after mowing.

3. Until acceptance by OWNER, CONTRACTOR will be responsible for maintenance.

3.09 MAINTENANCE

A. Maintain pedestrian barriers to protect newly seeded or sodded areas from traffic. Maintenance shall begin immediately following installation of each portion of lawn. Continue until acceptance.

B. Reapply mulch and hydro binder to mulch if it becomes dislodged prior to adequate growth.

C. Maintain lawns by watering, mowing, and repairing or replanting as may be necessary to produce uniform stand of grass until Work accepted.

D. Perform fist mowing when average height of grass reaches 3 in. Perform interim mowings, 2 minimum, as needed to maintain grass height at 2 to 2-1/2 in. Do not remove more than 1/3 of leaf blade by mowing.

E. After completion of required interim mowings, apply 18-5-9 fertilizer as specified herein.

F. Control weed growth. Apply herbicide in accordance with manufacturer's instructions.

G. Top dress or resod excessive cracks appearing upon soil shrinkage.

* * * END OF SECTION * * *

SECTION 05600
TUBULAR STEEL PEDESTRIAN / BICYCLE SAFETY RAILING

Description

Work includes the requirements for railings used for pedestrian and bicyclist safety alongside sidewalks or paths where shown on the Plans. Dimensions and basic construction requirements are to be as shown on the Plans.

Material Requirements

Railing materials shall be in general accordance with the Standard Specifications, except the material shall be limited to ungalvanized steel with primer and powder coatings.

Railing system shall be designed to withstand the following loads: Uniform 50 pounds per foot applied at the top in any direction. Concentrated load of 250 pounds applied at the top in any direction (Not loaded simultaneously). Handrail shall meet the requirements of AASHTO Standard Specifications for Highway Bridges and A.D.A. Building Code Requirements.

All tube materials shall be Schedule 40, ASTM A500, Grade B.

Threaded Anchor Rods shall be ASTM A572, Grade 50.

Primer shall be a zinc primer. All primer and powder coatings shall be intended for long-term outdoor use.

Color shall be: **glossy black**.

Construction Requirements

Submittals: Contractor shall submit shop drawings stamped by a licensed engineer for approval prior to ordering parts and the fabrication of the steel tube handrail. The drawings shall show elevations, details, sections; indicate materials, methods, finishes, types of joints and fasteners, anchorages and assemblies and accessory items. Provide setting diagrams and templates for anchorages, sleeves and bolts to be installed by the Contractor. Erection drawings shall depict panel lengths, splice locations, rail post spacing, and anchor/anchor bolt settings.

Installation shall be per the plans and Manufacturer’s Specifications.

SECTION 34400

TRAFFIC SIGNAL EQUIPMENT

PART 1 GENERAL

Work applies to replacement of traffic signal poles and equipment at the intersection of Old SR 37 and North Walnut Street.

PART 2 MATERIALS

2.1 UNINTERRUPTIBLE POWER SUPPLY
(This replaces applicable portions of the Standard Specifications and Recurring Special Provision 922-T-168 following this Section)

Unit shall be capable of handling surges and spikes present in normal utility power. In addition, provide up to 12 hours battery back up during power outages, and have the capabilities of being remotely monitored. Unit shall be housed in separate cabinet and connected/mounted to side of traffic controller cabinet. Automatic transfer switch to be included. Unit shall be model DBL MX 700 as manufactured by Tech Power Developments.

2.2 TRAFFIC SIGNAL CONTROLLER AND CABINET
(This replaces applicable portions of the Standard Specifications and Recurring Special Provision 922-T-168 following this Section)

The signal controller shall be a 16-phase TS2 controller and the P-cabinet shall be NEMA TS2 Type 1. The controller shall be compatible with existing City of Bloomington Aries signal system software and master controllers, and shall be an Econolite ASC/3 1000 controller manufactured by Econolite Control Products, Inc.

2.3 VIDEO VEHICLE DETECTION SYSTEM WITH TWO THERMAL CAMERAS
(This replaces applicable portions of the Standard Specifications and Recurring Special Provision 922-T-168 following this Section)

The video detection system is comprised of two FLIR SR-334T 24 volt thermal sensors (cameras) for providing video feeds to an Autoscope RackVision Terra machine vision processor. Interface to the RackVision Terra shall be by an Autoscope Interface Panel AIP-4 for future expansion

2.4 ACCESSIBLE PEDESTRIAN SIGNALS
(This replaces applicable portions of the Standard Specifications and Recurring Special Provision 922-T-168 following this Section)

The Accessible Pedestrian Signal system is comprised of Campbell Advanced Push Buttons (APB), model 912, and a Campbell Advanced Pedestrian Controller (APC) capable of interfacing with up to 16 Advanced Push Buttons. The ACP uses EoP (Ethernet over power) communication on low voltage wiring. The APC is software driven and has flexible configurations. Any web page browser can be used to configure the system. Remote access is available to the APC when the cabinet is on a network system.

2.5 DIGITAL WAVE RADAR DETECTOR
(This replaces applicable portions of the Standard Specifications and Recurring Special Provision 922-T-168 following this Section)

The digital wave radar detector shall be a Wavetronix Smart Sensor Advance, to emulate back loop detection, along with "safe arrival" technology calculating vehicle speed and arrival time to determine if vehicle extension is warranted. Interface to signal controller shall be by TS2 Click 112 2-channel input file card.

PART 3 CONSTRUCTION REQUIREMENTS

3.1 Installation of new equipment listed under MATERIALS shall be in accordance with manufacturer's requirements and Section 805.

3.2 TRANSPORTATION OF SALVAGEABLE SIGNAL EQUIPMENT

Salvaged steel strain poles, microwave detectors and indications shall be delivered to the City of Bloomington Traffic Department storage yard. Make arrangements through Derek Neff.

PEDESTRIAN BRIDGE AND ABUTMENTS DESIGN AND CONSTRUCTION

Part 1: GENERAL

Work includes the construction of a prefabricated steel truss bridge set on abutments of cast in place concrete on driven piles.

Conceptual designs of the bridge and abutment elements are provided in the Plans and Specifications, and in Section XII of this project manual. This conceptual design is provided to establish a general scope of work for bidding purposes, along with presenting materials, workmanship and other requirements.

Note that the design is based on the Continental steel truss and was designed by Contech Construction Products for this project. The bridge is required to be of the Continental truss design, though it is understood that this bridge can be manufactured by other suppliers.

CONTRACTOR may use the design provided in the contract documents <u>ONLY if the bridge supplied will be from Contech Construction Products.</u>

If any other supplier is proposed, then the Bidder MUST provide the additional materials and information required to establish that the supplier meets the required supplier qualifications AND the CONTRACTOR shall be required to FULLY DESIGN the bridge and abutments at their expense. All design drawings and computations must be stamped by a licensed engineer and be intended for this specific project.

The bridge and abutment designs presented are intended FOR INFORMATION ONLY and must be coordinated by the CONTRACTOR for the bridge they propose to use. CONTRACTOR will be required to provide its own design for the abutments that meets the requirements for the foundation bearing capacity and is compatible with the proposed bridge.

Additional information and requirements are in Section XII of this project manual.

SECTION XI

GEOTECHNICAL DATA

GEOTECHNICAL EVALUATION

CASCADES TRAIL
BLOOMINGTON, INDIANA

Prepared for

EAGLE RIDGE CIVIL ENGINEERING SERVICES, LLC
1321 LAUREL OAK DRIVE
AVON, INDIANA 46123

By

EARTH EXPLORATION, INC.
7770 WEST NEW YORK STREET
INDIANAPOLIS, INDIANA 46214-2988

March 8, 2010

EARTH EXPLORATION INC

March 8, 2010

EARTH EXPLORATION INC.
7770 West New York Street
Indianapolis, IN 46214-2988
317-273-1690 (FAX) 317-273-2250

Mr. Brock Ridgway, P.E.
Eagle Ridge Civil Engineering Services, LLC
1321 Laurel Oak Drive
Avon, IN 46123

Re: Geotechnical Evaluation
Cascades Trail
Bloomington, Indiana
EEI Project No. 1-09-035

Dear Brock:

We are pleased to submit our geotechnical evaluation for the above-referenced project. This report presents the results of our subsurface exploratory program and provides geotechnical recommendations for rock cuts and bridge structures that are planned as part of the proposed trail. As you are aware, the work for this project was authorized via electronic correspondence on March 17, 2009.

The opinions and recommendations submitted in this report are based, in part, on our interpretation of the subsurface information revealed at the exploratory locations as indicated on an attached plan. Understandably, this report does not reflect variations in subsurface conditions between or beyond these locations. Therefore, variations in these conditions can be expected, and fluctuation of the groundwater levels will occur with time. Other important limitations of this report are discussed in Appendix A.

PROJECT DESCRIPTION

We understand that representatives of the city of Bloomington are planning to construct a pedestrian / bicycle trail in the Cascades Park and Griffy Lake areas, and at this time, the use of local funds is being planned. Based on preliminary plans as it relates to the scope of our evaluation, construction of the trail is anticipated to include five single-span pedestrian bridges and three areas of anticipated rock cuts into existing slopes. From our understanding, the new bridges are anticipated to consist of single-span steel-truss structures established on spread or deep foundation schemes and are planned to be about 20 to 90 ft in length. The cuts are planned to be up to 25 ft in depth, and the sideslopes are planned to be 1H:2V.

No other information, such as bridge loads and construction schedule, is known at this time. In the event that the nature, design or location of the proposed construction changes, the conclusions and recommendations contained in this report shall not be considered valid unless the changes are reviewed, and the conclusions are modified or confirmed in writing.

FIELD EXPLORATION AND LABORATORY TESTING

Exploratory field activities were performed by Earth Exploration, Inc. (EEI) during the period of April 20 through 23, 2009. Our field activities included performing ten test borings (designated B-1 through B-10) and five soundings (designated S-1 through S-5) in addition to making site observations in the areas of earth cut. The number, location, and depth of the borings were selected by EEI based on discussions with Eagle Ridge Civil Engineering Services, LLC (ERCES) and an understanding of their expectations. The exploratory locations were identified in the field by EEI personnel referencing site features shown on conceptual plans made available at that time. Ground surface elevations at the exploratory locations were identified by others. The exploratory locations should be considered accurate only to the degree implied by the methods used.

The test boring and sounding activities (with the exception of Sounding S-4) were performed using hollow stem augers to advance the boreholes. Representative samples of the soil conditions using Standard Penetration Test (SPT) procedures (ASTM D 1586) were obtained at predetermined intervals. As deemed necessary, sampling of rock was also performed (ASTM D 2113) using NX-sized equipment. After obtaining final groundwater observations, each borehole was backfilled with auger cuttings, and a bentonite chip plug was placed near the surface. Additional details of the drilling and sampling procedures are provided in Appendix B.

Following the exploratory activities, the soil and rock samples were visually classified by an EEI engineering technician and later reviewed by an EEI geotechnical engineer. After visually classifying the soils, representative samples were selected and submitted for laboratory testing. These tests were performed in accordance with the applicable ASTM standard and included: natural moisture content; Atterberg limit determinations; hand penetrometer readings; and unconfined compressive strength on samples of rock. The results of the tests are provided on the boring logs in Appendix C. Soil classifications on the logs are according to the Unified Soil Classification System (USCS; ASTM D 2488). Further details of the classification system are available in Appendix C. The final boring logs represent our interpretation of the individual samples and field logs and results of the laboratory tests. The stratification lines on the boring logs represent the approximate boundary between soil and rock types; although, the transitions may actually be gradual.

SITE CONDITIONS

Soil Conditions

In general, the subsurface conditions consisted of cohesive-type soil overlying bedrock at depths of 4 to 10 ft in the southern portion of the alignment and at depths of 15 to 18 ft at the bridge locations in the northern portion of the alignment. The cohesive-type soils typically included lean clay (CL) and fat clay (CH), and based on the results of hand penetrometer readings, the consistency was observed to be stiff to very stiff. In addition, the moisture content of these soils was observed to be in the range of 21 to 39 percent with the higher moisture contents typically being related to the higher-plasticity clay (i.e. the fat clay). However, very soft conditions were noted at Borings B-9 and B-10 near depths of 6 and 8 ft, respectively, and the moisture content was as high as 56 percent. Furthermore, the cohesive soils were observed with numerous

cobbles and boulders, particularly near the bedrock surface. Other exceptions to the aforementioned profile included layers of granular soil (i.e., clayey sand, silty sand, and silt; likely related to meandering of the adjacent creeks and tributaries), and these conditions were typically observed to be medium dense base on the SPT N-values.

The underlying bedrock at the locations of Borings B-1, B-2, and B-3 consisted of limestone, and shale was observed at the other boring locations. Based on this information relative to the ground surface elevation at the test boring locations, the transition from limestone to shale appears to occur below Elevation 655. Both the limestone and shale were observed to be slightly fractured to fractured, and RQD (rock quality designation) values were measured to be in the range of 13 to 97 percent, indicating poor to excellent quality. Refer to the Log of Test Boring (10) and Summary of Soundings in Appendix C for additional information.

It should be noted that the project lies in an area of known karstic topography resulting from the solutioning of the underlying limestone. However, an evaluation of the presence of karstic features such as sinkholes, crevices or caverns was not included in our scope. In areas of karst, it is also important to recognize that the bedrock surface can vary significantly and abruptly over very short distances (e.g., pinnacles and crevices).

Groundwater Conditions

Groundwater level observations were made during and upon completion of the exploratory activities and are shown at the bottom of the logs. In general, groundwater was observed at the locations of Borings B-8 through B-10 (i.e., at the bridge locations in the northern portion of the project) at depths of 3 to 6 ft below the existing surface (near El. 586 to 589). Groundwater was typically not observed at the other exploratory locations (i.e., in the southern portion of the project) within the timeframe of our field activities; however, groundwater is anticipated to be present especially near the soil/bedrock interface. It should be recognized that groundwater levels of any kind can fluctuate due to changes in precipitation, infiltration, surface run-off, the level of the creek, and other hydrogeological factors.

DISCUSSION AND RECOMMENDATIONS

Bridge Foundations

Based on the results of our field and laboratory observations, we recommend that support of the pedestrian bridges include shallow or deep foundation elements depending on the depth to rock. The following table provides a summary of the recommended foundation types for each bridge.

Table 1. Summary of Recommended Foundation Type at Bridge Locations

Bridge Number / Exploratory Locations	Average Bridge Deck El.	Recommended Foundation Type	Anticipated Subgrade/Tip El.
Bridge No. 1 / B-3 & S-1	670	Spread Foundation	663 to 665
Bridge No. 2 / B-5 & S-2	640½	Spread Foundation	634 to 635
Bridge No. 3 / B-6 & S-3	631	Spread Foundation	626 to 625
Bridge No. 4 / B-8 & B-9	598½	Driven Pile Foundation	572 to 573
Bridge No. 5 / B-10 & S-5	597	Driven Pile Foundation	579

For spread foundations established on the weathered bedrock, we recommend using an allowable bearing pressure of 4,000 lbs/sq ft (psf), and the depth of the foundation should be at least 3 ft below the final grade for frost protection. For deep foundation elements, we recommend the use of HP-shape steel piles driven to refusal on rock. For piles driven to rock, we recommend that loads (axial and bending) applied to the H-piles be limited to ¼ of the yield stress. If lateral loads are anticipated and/or if scour is of concern at Bridge Nos. 4 and 5, a lateral pile analysis is recommended.

For Bridge Nos. 2, 3 and 4, excavations for spread foundations are anticipated to extend 5 to 8 ft below the existing ground surface in order to achieve adequate bearing. Once the bearing surface has been observed and approved as adequate, spread foundation construction could proceed at that depth or the grade could be re-established to a shallower depth using lean concrete (i.e., concrete with a minimum 28-day compressive strength of 2,000 lbs/sq. in [psi]). Thereafter, the spread foundation could be constructed on the lean concrete. This would allow for a typical spread foundation detail to be applicable regardless of the actual depth to rock.

At the location of Bridge No. 2, we understand that a Redi-Rock wall system (i.e., a mechanically-stabilized earth-type wall system) has been constructed along each side of the creek, and consideration is being given to support of the bridge on the existing structure backfill. We do not take exception to this approach for the recommended allowable bearing pressure as long as the structure backfill was placed in a controlled manner and compacted to at least 95 percent of the standard Proctor density and that the wall manufacturer/designer has considered and included, as necessary, the effects of surcharge in their wall design.

We recommend that EEI be retained during the foundation construction operations, including pile driving, to verify that the construction proceeds in compliance with the design concepts, specifications and recommendations.

Wingwall Considerations

Considering relatively clean structure backfill per the INDOT Standard Specifications (e.g., No. 4) will be used behind wingwalls, a moist/saturated unit weight of 115 pcf and an angle of internal friction of 32 degrees should be used for design. In addition, an interface friction angle of 17 degrees could be considered between the structure backfill and the concrete and between the

bedrock and spread foundations, if applicable. We recommend that the foundation considerations discussed above be used for support of the wingwalls (i.e., spread foundations or driven HP-piles).

Rock Cut Discussion

As mentioned, the preliminary plans indicate that cut slopes of up to 25 ft in height are required into three areas of existing slopes, and the cut slopes are planned at 1H:2V (about 65 degrees from the horizontal). These three areas are in the vicinity of Borings B-1 and B-2 and Sounding S-1, between Borings B-4 and B-5, and along Club House Drive in the vicinity of and north of Sounding S-4. Due to steeply-sloping terrain and subsequent restricted access, exploratory test borings with regard to making an evaluation of slope conditions were limited to Borings B-1 and B-2, which were performed on properties along Walnut Street at the crest of that slope.

Based on our site visit and topographic information included in the plans, the existing slopes are estimated to be in the range of 1H:1V to 2H:1V in steepness, and the outcropping of rock was noted in some locations. Where observed, the rock consisted of limestone with bands and layers of shale, and water was seeping from the rock face at a few locations. Based on our field and rock core observations, these rock types include thin (less than 1 in.) to moderately-thick (several inches to ft) bedding planes, and the bedding planes are relatively level (i.e. horizontal). In addition, orthogonal near-vertical fractures are typically present in the rock mass, and these features when present in limestone are typically exacerbated by solutioning. Representative photographs of the three areas of planned cut are included in Appendix D.

Based on the aforementioned conditions relative to the planned cut slope, the greatest risk related to slope instability is sloughing (raveling) of the face of the slope. As you are aware, raveling is the mechanical weathering of the rock face, and this process results in deposition of fallen rock fragments of various sizes at the toe of slopes. To reduce safety concerns of fallen rock on the trail, we concur with your planned ditch or comparable area (a shoulder) to be constructed at the toe. It is important that the owner understands that periodic maintenance will be required to remove fallen rock, and maintenance should be performed more often during periods of extended wet weather, after heavy rainfall events, and during periods of frequent freeze and thaw cycles. In addition to concerns regarding safety, keeping the ditch at the toe clean helps to facilitate drainage and reduce the risk of further instability related to poor drainage. Because this weathering process advances at different rates for different rock types (e.g., shale versus limestone), over time it is common to observe undermining (refer to Photograph Nos. 5 and 6). Consequently, future risks of larger masses of fallen rock and reduced trail safety should be anticipated unless future maintenance actions are implemented. Future maintenance action items would likely include, but not limited to, removal of precarious boulders or undermined portions of the face, reshaping of the rock face, or the installation of rock bolts possibly with the use cable nets and facing treatment (e.g., shotcrete).

In general, we do not take exception to the planned geometry of the rock cuts provided the owner understands and incorporates into their maintenance program issues discussed above. As you know, it is impossible to predict with any accuracy (based on visual observations alone) the rate of raveling and the frequency of future earthwork activities to re-shape the slope and/or remove unsafe rock conditions. However, based on observations of the existing slopes, we can predict with relative certainty that raveling and undermining will occur. To help reduce the frequency and extent

of these future earthwork requirements, we recommend that areas of highly weathered or fracture rock or soil exposed at the cut face be over-excavated (scaled and trimmed). This would result in a larger cut volume and increased adjacent property and tree disturbance but is anticipated to be more economical that bolting with facing treatment. Where scaling and trimming is not practical or where insufficient right-of-way exists, we recommend that rock bolts with a cable net (possibly vegetated) be considered to help stabilize the face. In addition, where water is observed seeping from the face of the cut, we recommend that horizontal drains be drilled to facilitate the drainage and reduce any water pressure behind the face. The drilled holes should be frequently-spaced (e.g., 10 ft) and be finished with 1-in. diameter slotted PVC pipe.

We recommend that an EEI geologist or geotechnical engineer be present during construction to make observations of the cut face and provide further recommendations (e.g., for over-excavation) as necessary. In addition, the contract documents should be prepared to include a unit rate for rock excavation. The owner should include a contingency equal to 25 percent of the theoretical rock cut quantity.

Other General Trail Considerations

Typical Subgrade Preparation Techniques

Where new pavement components earth fill are planned, it is typical to remove (i.e., strip) topsoil, wet or soft/loose near-surface soils, and tree roots (via grubbing) from within the construction limits. Anticipating cohesive-type soils will be exposed at the subgrade, a proof-roll observation should be performed to evaluate the subgrade conditions with regard to supporting paving equipment and pavement performance. Based on the few widely-spaced test borings, we anticipate that widespread soft conditions will be exposed during the proof-roll observation in the vicinity of Borings B-8, B-9, and B-10. In addition, isolated soft conditions are anticipated to be exposed for those portions of the trail located along Cascades Creek. The extent of soft subgrade conditions is dependent on the time of the year that construction takes place and workmanship and care by the contractor.

It is typically more economical, particularly in the Bloomington area, to improve isolated soft areas via the use of a layer of open-graded stone (i.e., INDOT No. 2 crushed aggregate) worked into the subgrade where grades permit. For those areas in the vicinity of Borings B-8, B-9, and B-10, improvement of the subgrade could consist of the placement of the rock excavated from the cut areas discussed above, particularly since we anticipate fill will be required to establish the profile of the trail. Where excavated rock is used as fill, maximum particle sizes should be limited to 12 in., and effort should be made by the contractor to minimize the presence of void spaces in the fill (i.e., compact the fill).

In general, it is important to provide positive drainage during construction in order to reduce the risk of ponding and subsequent or further softening of subgrade areas. Ditches should be kept open at all times, and the subgrade should be graded smooth at the end of each day to facilitate drainage.

CONCLUDING REMARKS

In closing, we recommend that EEI be provided the opportunity to review the final design and project specifications to confirm that foundation requirements have been properly interpreted and implemented in the design and specifications. We also recommend that EEI be retained to provide construction observation services during the foundation construction phases of the project. This will allow us to verify that the construction proceeds in compliance with the design concepts, specifications and recommendations. It will also allow design changes to be made in the event that subsurface conditions differ from those anticipated.

We appreciate the opportunity to provide our services to you on this project. Please contact our office if you have any questions or need further assistance with the project.

Sincerely,

EARTH EXPLORATION, INC.

Michael S. Wigger, P.E.
Geotechnical Engineering Manager

Scott J. Ludlow, Ph.D., P.E.
Principal Engineer

Attachments –

APPENDIX A - Important Information about Your Geotechnical Report
APPENDIX B - Field Methods for Exploring and Sampling Soils and Rock
APPENDIX C - General Site Map (Drawing No. 1-09-035.A1)
Exploratory Location Plan (Drawing Nos. 1-09-035.B2 & .B3)
Unified Soil Classification System/General Notes
Log of Test Borings (10)
Summary of Soundings
APPENDIX D - Photographs of Existing Slopes

APPENDIX A

IMPORTANT INFORMATION ABOUT YOUR
GEOTECHNICAL ENGINEERING REPORT

Important Information About Your

Geotechnical Engineering Report

Subsurface problems are a principal cause of construction delays, cost overruns, claims, and disputes.

The following information is provided to help you manage your risks.

Geotechnical Services Are Performed for Specific Purposes, Persons, and Projects

Geotechnical engineers structure their services to meet the specific needs of their clients. A geotechnical engineering study conducted for a civil engineer may not fulfill the needs of a construction contractor or even another civil engineer. Because each geotechnical engineering study is unique, each geotechnical engineering report is unique, prepared *solely* for the client. *No one except you* should rely on your geotechnical engineering report without first conferring with the geotechnical engineer who prepared it. *And no one—not even you*—should apply the report for any purpose or project except the one originally contemplated.

Read the full report

Serious problems have occurred because those relying on a geotechnical engineering report did not read it all. Do not rely on an executive summary. Do not read selected elements only.

A Geotechnical Engineering Report Is Based on A Unique Set of Project-Specific Factors

Geotechnical engineers consider a number of unique, project-specific factors when establishing the scope of a study. Typical factors include: the client's goals, objectives, and risk management preferences; the general nature of the structure involved, its size, and configuration; the location of the structure on the site; and other planned or existing site improvements, such as access roads, parking lots, and underground utilities. Unless the geotechnical engineer who conducted the study specifically indicates otherwise, *do not rely on a geotechnical engineering report* that was:

- not prepared for you,
- not prepared for your project,
- not prepared for the specific site explored, or
- completed before important project changes were made.

Typical changes that can erode the reliability of an existing geotechnical engineering report include those that affect:

- the function of the proposed structure, as when it's changed from a parking garage to an office building, or from a light industrial plant to a refrigerated warehouse,
- elevation, configuration, location, orientation, or weight of the proposed structure,
- composition of the design team, or
- project ownership.

As a general rule, *always* inform your geotechnical engineer of project changes—even minor ones—and request an assessment of their impact. *Geotechnical engineers cannot accept responsibility or liability for problems that occur because their reports do not consider developments of which they were not informed.*

Subsurface Conditions Can Change

A geotechnical engineering report is based on conditions that existed at the time the study was performed. *Do not rely on a geotechnical engineering report* whose adequacy may have been affected by: the passage of time; by man-made events, such as construction on or adjacent to the site; or by natural events, such as floods, earthquakes, or groundwater fluctuations. *Always* contact the geotechnical engineer before applying the report to determine if it is still reliable. A minor amount of additional testing or analysis could prevent major problems.

Most Geotechnical Findings Are Professional Opinions

Site exploration identifies subsurface conditions *only* at those points where subsurface tests are conducted or samples are taken. Geotechnical engineers review field and laboratory data and then apply their professional judgment to render an *opinion* about subsurface conditions throughout the site. Actual subsurface conditions may differ—sometimes significantly—from those indicated in your report. Retaining the geotechnical engineer who developed your report to provide construction observation is the most effective method of managing the risks associated with unanticipated conditions.

A Report's Recommendations Are *Not* Final

Do not overrely on the construction recommendations included in your report. *Those recommendations are not final*, because geotechnical engineers develop them principally from judgment and opinion. Geotechnical engineers can finalize their recommendations only by observing actual subsurface conditions revealed during construction. *The geotechnical engineer who developed your report cannot assume responsibility or liability for the report's recommendations if that engineer does not perform construction observation.*

A Geotechnical Engineering Report Is Subject To Misinterpretation

Other design team members' misinterpretation of geotechnical engineering reports has resulted in costly problems. Lower that risk by having your geotechnical engineer confer with appropriate members of the design team after submitting the report. Also retain your geotechnical engineer to review pertinent elements of the design team's plans and specifications. Contractors can also misinterpret a geotechnical engineering report. Reduce that risk by having your geotechnical engineer participate in prebid and preconstruction conferences, and by providing construction observation.

Do Not Redraw the Engineer's Logs

Geotechnical engineers prepare final boring and testing logs based upon their interpretation of field logs and laboratory data. To prevent errors or omissions, the logs included in a geotechnical engineering report should *never* be redrawn for inclusion in architectural or other design drawings. Only photographic or electronic reproduction is acceptable, *but recognize that separating logs from the report can elevate risk.*

Give Contractors a Complete Report and Guidance

Some owners and design professionals mistakenly believe they can make contractors liable for unanticipated subsurface conditions by limiting what they provide for bid preparation. To help prevent costly problems, give contractors the complete geotechnical engineering report, *but* preface it with a clearly written letter of transmittal. In that letter, advise contractors that the report was not prepared for purposes of bid development and that the report's accuracy is limited; encourage them to confer with the geotechnical engineer who prepared the report (a modest fee may be required) and/or to conduct additional study to obtain the specific types of information they need or prefer. A prebid conference can also be valuable. *Be sure contractors have sufficient time* to perform additional study. Only then might you be in a position to give contractors the best information available to you, while requiring them to at least share some of the financial responsibilities stemming from unanticipated conditions.

Read Responsibility Provisions Closely

Some clients, design professionals, and contractors do not recognize that geotechnical engineering is far less exact than other engineering disciplines. This lack of understanding has created unrealistic expectations that have led to disappointments, claims, and disputes. To help reduce such risks, geotechnical engineers commonly include a variety of explanatory provisions in their reports. Sometimes labeled "limitations", many of these provisions indicate where geotechnical engineers responsibilities begin and end, to help others recognize their own responsibilities and risks. *Read these provisions closely.* Ask questions. Your geotechnical engineer should respond fully and frankly.

Geoenvironmental Concerns Are Not Covered

The equipment, techniques, and personnel used to perform a *geoenvironmental* study differ significantly from those used to perform a *geotechnical* study. For that reason, a geotechnical engineering report does not usually relate any geoenvironmental findings, conclusions, or recommendations; e.g., about the likelihood of encountering underground storage tanks or regulated contaminants. *Unanticipated environmental problems have led to numerous project failures.* If you have not yet obtained your own geoenvironmental information, ask your geotechnical consultant for risk management guidance. *Do not rely on an environmental report prepared for someone else.*

Rely on Your Geotechnical Engineer for Additional Assistance

Membership in ASFE exposes geotechnical engineers to a wide array of risk management techniques that can be of genuine benefit for everyone involved with a construction project. Confer with your ASFE-member geotechnical engineer for more information.

ASFE

8811 Colesville Road Suite G106 Silver Spring, MD 20910

Telephone: 301-565-2733 Facsimile: 301-589-2017

email: info@asfe.org www.asfe.org

Copyright 2000 by ASFE, Inc. Unless ASFE grants written permission to do so, duplication of this document by any means whatsoever is expressly prohibited. Re-use of the wording in this document, in whole or in part, also is expressly prohibited, and may be done only with the express permission of ASFE or for purposes of review or scholarly research.

UGER1000.10M

APPENDIX C

GENERAL SITE MAP (DRAWING NO. 1-09-035.A1)

EXPLORATORY LOCATION PLAN (DRAWING NOS. 1-09-035.B2 & .B3)

UNIFIED SOIL CLASSIFICATION SYSTEM/GENERAL NOTES

LOG OF TEST BORINGS (10)

SUMMARY OF SOUNDINGS

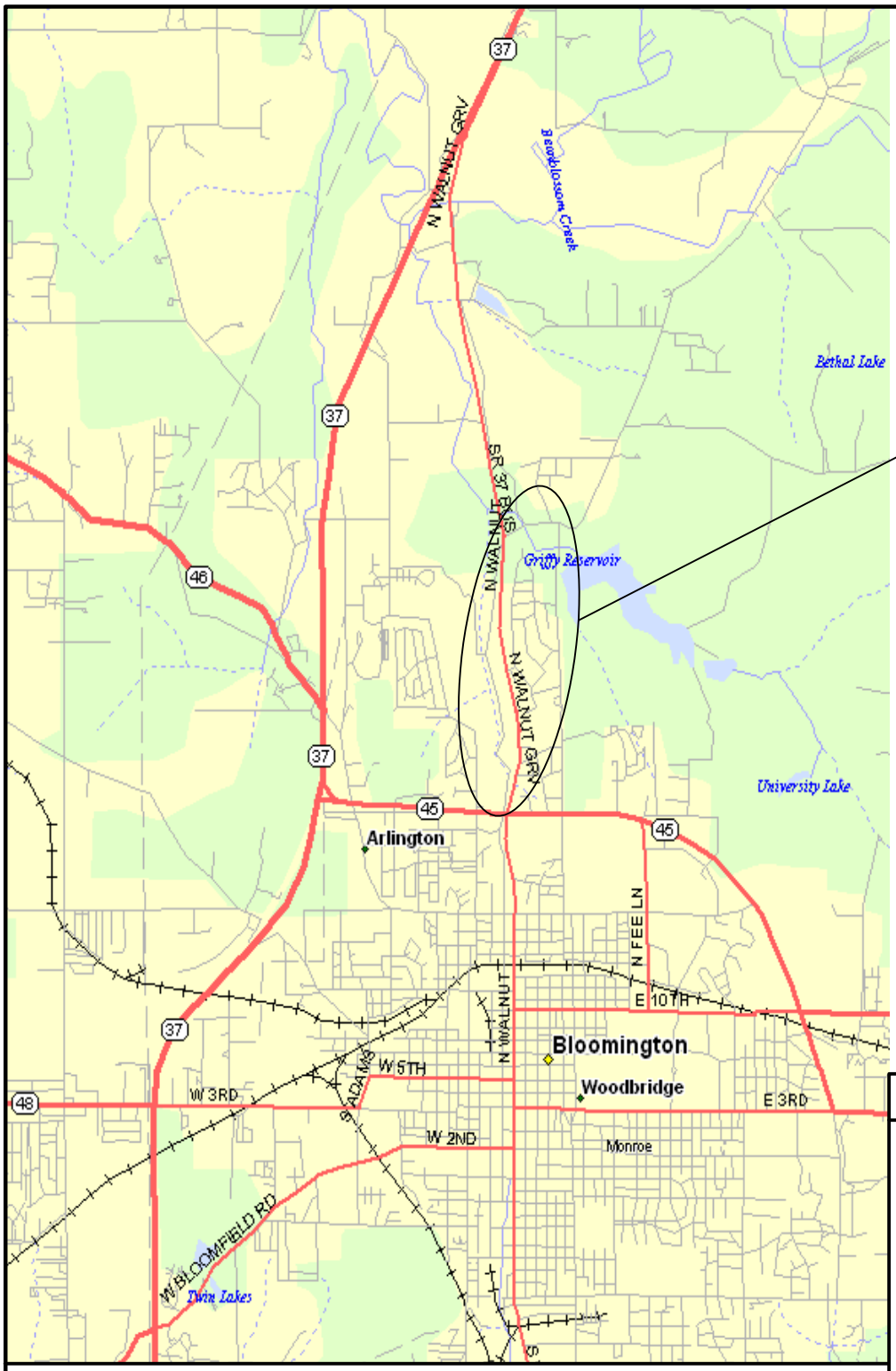

NOTES

1. Base map generated using commercially-available software by DeLorme (Street Atlas USA ver. 7.0).

VICINITY MAP
N.T.S.

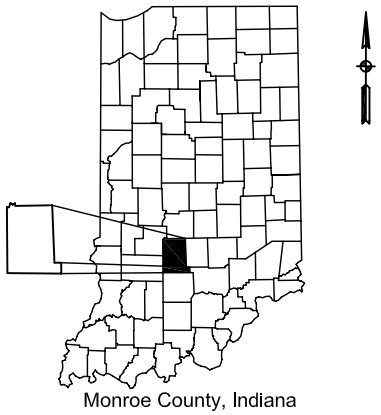

Monroe County, Indiana

GENERAL SITE MAP

PROJECT:	Cascades Park/Griffy Lake Trail
LOCATION:	Bloomington, Indiana
CLIENT:	Eagle Ridge Civil Engineering Servies, LLC
EEI PROJECT NO.:	1-09-035
SCALE:	N.T.S.

PROJECT ENG: MSW
APPROVED BY: SJL
DRAWN BY: JBF
DATE AND TIME: 5/14/09 8:44:23

EARTH EXPLORATION
7770 West New York Street
Indianapolis, IN 46214-2988
317-273-1690
(FAX) 317-273-2250

DRAWING NO.:
1-09-035.A1

LEGEND	NOTES	EXPLORATORY LOCATION PLAN
B-8 Test Boring Location and Designation S-5 Sounding Location and Designation	1. Base map developed from an electronic file provided by Eagle Ridge Civil Engineering Services, LLC on May 8, 2009. 2. Refer to the Log of Test Boring (10) and Summary of Sounding in Appendix C for a description of the subsurface conditions encountered at the exploratory locations. 3. Borings and Soundings were located in the field by Earth Exploration, Inc. on March 24, 2009. 4. Ground surface elevations at the exploratory locations were obtained by others. 5. Exploratory locations are approximate.	PROJECT: Cascades Park/Griffy Lake Trail LOCATION: Bloomington, Indiana CLIENT: Eagle Ridge Civil Engineering Services, LLC EEI PROJ. NO.: 1-09-035 SCALE: 1" = 300'

PROJECT ENGINEER: MSW
APPROVED BY: SJL
DRAWN BY: JBF
DATE AND TIME: 5/13/09 12:08:32
DRAWING NUMBER: 1-09-035.B3

EARTH EXPLORATION Inc
7770 West New York Street
Indianapolis, IN 46214-2988
317-273-1690
(FAX) 317-273-2250

UNIFIED SOIL CLASSIFICATION SYSTEM / GENERAL NOTES

FINE-GRAINED SOILS

CONSISTENCY	UNCONFINED STRENGTH (tsf)
Very Soft	<0.25
Soft	0.25 - 0.5
Medium	0.5 - 1.0
Stiff	1.0 - 2.0
Very Stiff	2.0 - 4.0
Hard	>4.0

COARSE-GRAINED SOILS

RELATIVE DENSITY	N-VALUE* (Blows/ft)
Very Loose	0 - 4
Loose	4 - 10
Medium Dense	10 - 30
Dense	30 - 50
Very Dense	50+

RELATIVE PROPORTIONS

TERM	DEFINING RANGE BY % OF WEIGHT
Trace	0 - 5
Little	5 - 12
Some	12 - 35
And	35 - 50

ORGANIC CONTENT BY COMBUSTION METHOD

SOIL DESCRIPTION	LOI
Trace Organic Matter	0 - 5%
Little Organic Matter	5 - 12%
Organic Silt/Clay	12 - 35%
Sedimentary Peat	35 - 50%
Fibrous and Woody Peat	50%±

UNIFIED SOIL CLASSIFICATION AND SYMBOL CHART

MAJOR DIVISIONS			SYMBOLS & DESCRIPTIONS	
COARSE-GRAINED SOILS More than 50% of material coarser than No. 200 sieve	GRAVEL AND GRAVELLY SOILS More than 50% of coarse fraction retained on No. 4 sieve	CLEAN GRAVELS Little or no fines	GW	WELL GRADED GRAVELS, GRAVEL-SAND MIXTURES, LITTLE OR NO FINES
			GP	POORLY GRADED GRAVELS, GRAVEL-SAND MIXTURES, LITTLE OR NO FINES
		GRAVELS WITH FINES Appreciable amount of fines	GM	SILTY GRAVELS, GRAVEL-SAND-SILT MIXTURES
			GC	CLAYEY GRAVELS, GRAVEL-SAND-CLAY MIXTURES
	SAND AND SANDY SOILS More than 50% of coarse fraction passing No. 4 sieve	CLEAN SANDS Little or no fines	SW	WELL GRADED SANDS, GRAVELLY SANDS, LITTLE OR NO FINES
			SP	POORLY GRADED SANDS, GRAVELLY SANDS, LITTLE OR NO FINES
		SANDS WITH FINES Appreciable amount of fines	SM	SILTY SANDS, SAND-SILT MIXTURES
			SC	CLAYEY SANDS, SAND-CLAY MIXTURES
FINE-GRAINED SOILS More than 50% of material finer than No. 200 sieve	SILTS AND CLAYS	LIQUID LIMIT LESS THAN 50	ML	INORGANIC SILTS AND VERY FINE SANDS, ROCK FLOUR, SILTY OR CLAYEY FINE SAND OR CLAYEY SILTS WITH SLIGHT PLASTICITY
			CL	INORGANIC CLAYS OF LOW TO MEDIUM PLASTICITY, GRAVELLY CLAYS SANDY CLAYS, SILTY CLAYS, LEAN CLAYS
			OL	ORGANIC SILTS AND ORGANIC SILTY CLAYS OF LOW PLASTICITY
	SILTS AND CLAYS	LIQUID LIMIT GREATER THAN 50	MH	INORGANIC SILTS, MICACEOUS OR DIATOMACEOUS FINE SANDY OR SILTY SOILS, ELASTIC SILT
			CH	INORGANIC CLAYS OF HIGH PLASTICITY, FAT CLAYS
			OH	ORGANIC CLAYS OF MEDIUM TO HIGH PLASTICITY, ORGANIC SILTS
HIGHLY ORGANIC SOILS			PT	PEAT, HUMUS, SWAMP SOILS WITH HIGH ORGANIC CONTENT

NOTE: DUAL SYMBOLS USED FOR BORDERLINE CLASSIFICATIONS

GRAIN SIZE TERMINOLOGY

SOIL FRACTION		PARTICLE SIZE	US STANDARD SIEVE SIZE
Boulders		Larger than 12-in.	Larger than 12-in.
Cobbles		3 to 12-in.	3 to 12-in.
Gravel	Coarse	3/4 to 3-in.	3/4 to 3-in.
	Fine	4.75 mm to 3/4-in.	#4 to 3/4-in.
Sand	Coarse	2.00 to 4.75 mm	#10 to #4
	Med	0.425 to 2.00 mm	#40 to #10
	Fine	0.075 to 0.425 mm	#200 to #40
Silt		0.005 to 0.075 mm	Smaller than #200
Clay		Smaller than 0.005 mm	Smaller than #200

Plasticity characteristics differentiate between silt and clay.

PLASTICITY CHART

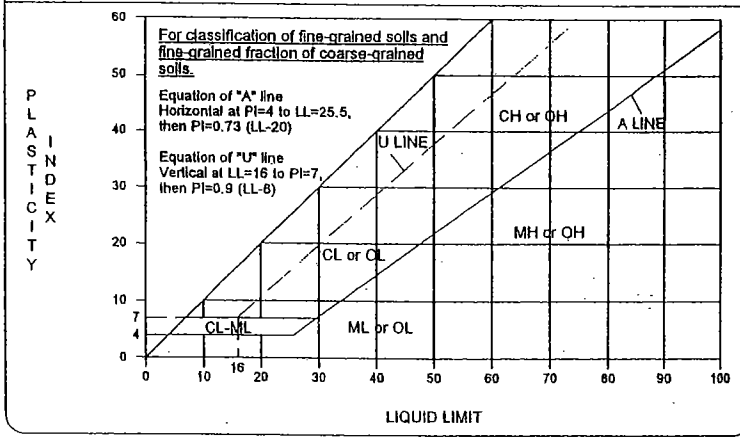

EXPLORATORY SAMPLING ABBREVIATIONS

AS	- Auger Sample	PID	- Photo-Ionization Detector
BF	- Backfilled Upon Completion	PMT	- Borehole Pressuremeter Test
BS	- Bag Sample	PT	- 3-in. O.D. Piston Sample
C	- Casing: Size 2½-in., NW; 4-in., HW	PTS	- Peat Sample
COA	- Clean-Out Auger	RB	- Rock Bit
CS	- Continuous Sampler	RC	- Rock Core
CW	- Clear Water	REC	- Recovery
DC	- Driven Casing	RQD	- Rock Quality Designation
DM	- Drilling Mud	RS	- Rock Sounding
FA	- Flight Auger	S	- Soil Sounding
FT	- Fish Tail	SS	- 2-in. O.D. Split-Spoon Sample
HA	- Hand Auger	ST	- Thin-Walled Tube Sample
HSA	- Hollow Stem Auger	VS	- Vane Shear Test
NW	- No Water Encountered	WPT	- Water Pressure Test

LABORATORY TEST ABBREVIATIONS

qp	- Hand Penetrometer Reading, tsf
qu	- Unconfined Compressive Strength, tsf
W	- Moisture Content, %
LL	- Liquid Limit, %
PL	- Plastic Limit, %
PI	- Plasticity Index, %
SL	- Shrinkage Limit, %
LOI	- Loss on Ignition, %
γ_d	- Dry Unit Weight, pcf
pH	- Hydrogen-Ion Concentration
P_{200}	- Percent Passing a No. 200 Sieve

*The penetration resistance, N, is the summation of the number of blows required to effect two successive 6" penetrations of the 2" O.D. split-spoon sampler. The sampler is driven with a 140 lb weight falling 30" and is seated to a depth of 6" before commencing the standard penetration test.

LOG OF TEST BORING

EARTH EXPLORATION INC

Project: Cascades Trail
Location: Bloomington, Indiana
Client: Eagle Ridge Civil Engineering Services, LLC

7770 West New York Street - Indianapolis, Indiana 46214
317-273-1690 / 317-273-2250 (Fax)

Boring No. B-8
Elevation 592
Datum USC & GS
EEI Proj. No. 1-09-035
Sheet 1 of 1

Proj. No.	---	Station	---	Weather	Sunny	Driller	C.H.
Struct. No.	---	Offset	---	Temp.	70° F	Inspector	---

SAMPLE No.	Type	Rec %	N Value	Depth ft	Elev	DESCRIPTION/CLASSIFICATION and REMARKS	q_p tsf	q_u tsf	γ_d pcf	W %	LL %	PL %	PI %
SS-1		100	9		590	**CL, LEAN CLAY**, trace sand and gravel, medium, brown	0.75			24.6			
SS-2		35	12	5		**SM, SILTY SAND**, little to some gravel, medium dense, moist, brown							
SS-3		55	5		585		0.75			22.2			
SS-4		55	6	10	580	**CL, LEAN CLAY**, little to some sand and gravel, medium, brown	0.75			21.9			
SS-5		65	15	15	575	**ML, SILT**, trace sand and gravel, medium dense, wet, gray							
SS-6		100	50/.4	20	570	**HIGHLY WEATHERED SHALE**, very soft, brown and gray, (visual)							
RC-1		100	RQD = 97%	25	565	**SHALE**, low bedding planes, moderately hard, fine grained, brown and gray to gray below 24.3'			254				
				30		End of Boring at 30 ft							

WATER LEVEL OBSERVATIONS

Depth ft	While Drilling	Upon Completion	After Drilling
To Water	6	6*	BF
To Cave-in		18	

The stratification lines represent the approximate boundary between soil/rock types and the transition may be gradual.

GENERAL NOTES

Start 4/23/09 End 4/23/09 Rig D120 ATV
Drilling Method 3¼" I.D. HSA
Remarks: Backfilled with auger cuttings and bentonite chip plug near surface. *Water introduced during drilling.

LOG OF TEST BORING

EARTH EXPLORATION INC
7770 West New York Street - Indianapolis, Indiana 46214
317-273-1690 / 317-273-2250 (Fax)

Project: Cascades Trail
Location: Bloomington, Indiana
Client: Eagle Ridge Civil Engineering Services, LLC

Boring No.: B-9
Elevation: 591
Datum: USC & GS
EEI Proj. No.: 1-09-035
Sheet: 1 of 1

Proj. No.	---	Station	---	Weather	Sunny	Driller	C.H.
Struct. No.	---	Offset	---	Temp.	70° F	Inspector	---

SAMPLE No.	Type	Rec %	N Value	Depth ft	Elev	DESCRIPTION/CLASSIFICATION and REMARKS	q_p tsf	q_u tsf	γ_d pcf	W %	LL %	PL %	PI %
					590								
SS-1		90	4			**CL, LEAN CLAY**, trace sand, trace to little gravel, medium, brown, with little rock fragments	0.75			28.8	35	26	9
SS-2		90	7	5		**SM, SILTY SAND**, some sand and gravel, loose, very moist, brown							
					585								
SS-3		65	4			**CL, LEAN CLAY**, trace sand and gravel, very soft, moist to very moist, gray, with trace organics	<0.25			56.1			
SS-4		80	11	10									
					580	**SM, SILTY SAND and gravel**, medium dense, wet, brown to gray below 13'							
SS-5		35	18	15									
					575								
SS-6		80	50/.5			**HIGHLY WEATHERED SHALE**, very soft, brown and gray							
RC-1		100	RQD = 64%	20	570	**SHALE**, low bedding planes, moderately hard, fine grained, brown and gray to gray below 23.4'		335					
						End of Boring at 24.5 ft							

WATER LEVEL OBSERVATIONS

Depth ft	While Drilling	Upon Completion	After Drilling
To Water	6	6*	BF
To Cave-in		10½	

The stratification lines represent the approximate boundary between soil/rock types and the transition may be gradual.

GENERAL NOTES

Start 4/23/09 End 4/23/09 Rig D120 ATV
Drilling Method 3¼" I.D. HSA
Remarks: Backfilled with auger cuttings and bentonite chip plug near surface. *Water introduced during drilling.

SECTION XII

PEDESTRIAN BRIDGE AND ABUTMENTS DESIGN AND SPECIFICATIONS

SPECIAL SPECIFICATIONS FOR PREFABRICATED BRIDGE

1.0 GENERAL

1.1 Scope

These specifications are for a fully engineered clear span bridge of steel construction and shall be regarded as minimum standards for design and construction. These specifications are based on products designed and manufactured by CONTECH Bridge Solutions a Continental Bridge brand, 8301 State Highway 29 North, Alexandria, MN 56308.
Phone: 1-800-328-2047 or (320) 852-7500 Fax: 320-852-7067
E-mail: continental@contechbridge.com

1.2 Qualified Suppliers

Each bidder is required to identify their intended bridge supplier as part of the bid submittal. Qualified suppliers must have at least 5 years experience fabricating these type structures.

Pre-approved Manufacturers:
CONTECH Bridge Solutions Inc.
8301 State Highway 29 North
Alexandria, Minnesota 56308
1-800-328-2047

The contractor must provide the following documentation, for any proposed supplier who is not pre-approved:

* Product Literature

* All documentation to insure the proposed substitution will be in compliance with these specifications. This shall include:

  - Representative design calculations
  - Representative drawings
  - Splicing and erection procedures
  - Warranty information
  - Inspection and Maintenance procedures
  - AISC Shop Certification
  - Welder Qualifications

* Proposed suppliers must have at least five (5) years experience designing and fabricating these type structures and a minimum of five (5) successful bridge projects, of similar construction, each of which has been in service at least three (3) years. List the location, bridge size, owner, and a contact for reference for each project.

  The engineer will evaluate and verify the accuracy of the submittal. If the engineer determines that the qualifying criteria have not been met, the contractor's proposed supplier shall be rejected. The engineer's ruling shall be final.

2.0 GENERAL FEATURES OF DESIGN

2.1 Span

Bridge span shall be 90'-0" (straight line dimension) and shall be as measured from each end of the bridge structure.

2.2 Width

Bridge width shall be 10'-2" and shall be as measured from the inside face of structural elements at deck level.

2.3 Bridge System Type

Bridge(s) shall be designed as a Continental Connector Truss (P1-SQ), that has one (1) diagonal per panel and plumb end vertical members. Interior vertical members may be either plumb or perpendicular to the chord faces.

2.3.1 Bridge(s) shall be designed utilizing an underhung floor beam (top of floor beam welded to the bottom of the bottom chord) .

2.3.2 The bridge manufacturer shall determine the distance from the top of the deck to the top and bottom truss members based upon structural and/or shipping requirements.

2.3.3 The top of the top chord shall not be less than 54 inches above the deck (measured from the high point of the riding surface) on bike path structures.

2.4 Member Components

All members of the vertical trusses (top and bottom chords, verticals, and diagonals) shall be fabricated from square and/or rectangular structural steel tubing. Other structural members and bracing shall be fabricated from structural steel shapes or square and rectangular structural steel tubing.

Unless the floor and fastenings are specifically designed to provide adequate lateral support to the top flange of open shape stringers (w-shapes or channels), a minimum of one stiffener shall be provided in each stringer at every floor beam location.

2.5 Attachments

2.5.1 Safety Rails

Vertical safety rails or pickets shall be placed on the structure up to a minimum height of 5′-6″ above the deck surface. The pickets shall be spaced so as to prevent a 4″ sphere from passing through the truss. Pickets shall be placed on the outside of the truss as per the bridge plans.

The picket safety system shall be designed for an infill loading of 200 pounds, applied horizontally at right angles, to a one square foot area at any point in the system.

2.5.3 Toe Plate

The bridge shall be supplied with a removable toe plate mounted to the inside face of both trusses. The toe plate shall be a minimum of 4 inches high. Toe plating will be attached to the truss members at a height adequate to

provide a 2″ gap between the bottom of the plate and the top of the deck or the top of the bottom chord, whichever is higher. The span of unstiffened flat toe plating (from center to center of supports) shall not exceed 5′-8″.

2.5.5 Rubrails

The bridge will be supplied with a 1"x 5-1/2" (actual size) naturally durable hardwood Ipe (Tabebuia Spp Lapacho Group) rubrail. Rubrail shall be partially air dried to a moisture content of 15% to 20%, shall be supplied S4S (surfaced four sides), E4E (eased four edges), with the edges eased to a radius of 1/8″. Measured at 30% moisture content, the width and thickness shall not vary from specified dimensions by more than ± 0.04 inches. Ends of each piece shall be sealed with "Anchorseal" Mobil CER-M or an equal aquious wax log sealer.

Rubrails shall be attached flush to the inside face of the bridge truss verticals and fastened with two carriage bolts at each support location. The span of the rubrail from centerline to centerline of support shall not exceed 6′-6″.

The top of the rubrail shall be 3′-6″ above the top of the deck (measured at the outside edge of the deck).

2.6 Camber

The bridge shall have a vertical camber dimension at midspan equal to 100% of the full dead load deflection.

2.7 Elevation Difference

The bridge abutments shall be constructed at the same elevation on both ends of the bridge.

3.0. ENGINEERING

Structural design of the bridge structure(s) shall be performed by or under the direct supervision of a licensed professional engineer and done in accordance with recognized engineering practices and principles. The engineer shall be licensed to practice in ***Indiana.***

3.1 Design Loads

In considering design and fabrication issues, this structure shall be assumed to be statically loaded. No dynamic analysis shall be required nor shall fabrication issues typically considered for dynamically loaded structures be considered for this bridge.

3.1.1 Dead Load

The bridge structure shall be designed considering its own dead load (superstructure and original decking) only. No additional dead loading need be considered.

3.1.2 Uniform Live Load

3.1.2.1 Pedestrian Live Load

Main Members: Main supporting members, including girders, trusses and arches shall be designed for a pedestrian live load of 85 pounds per square foot of bridge walkway area. The pedestrian live load shall be applied to those areas of the walkway so as to produce maximum stress in the member being designed. If the bridge walkway area to which the pedestrian live load is applied (deck influence area) exceeds 400 square feet, the pedestrian live load may be reduced by the following equation:

$$w = 85\,[0.25 + \frac{15}{\sqrt{A_I}})]$$

Where w is the design pedestrian load (psf) and A_I is the deck influence area in square feet.

The reduced design live load shall not be less than 65 pounds per square foot of bridge walkway area.

Secondary Members: Bridge decks and supporting floor systems, including secondary stringers, floor beams and their connections to main supporting members shall be designed for a live load of 85 pounds per square foot, with no reduction allowed.

3.1.3 Concentrated Loads

The bridge superstructure, floor system and decking shall be designed for each of the following point load conditions:

3.1.3.1 A concentrated load of 1000 pounds placed on any area 2.5 ft x 2.5 ft square.

3.1.3.2 A 1200 pound two wheel vehicle with a wheelbase and tire print area as shown in the following diagram:

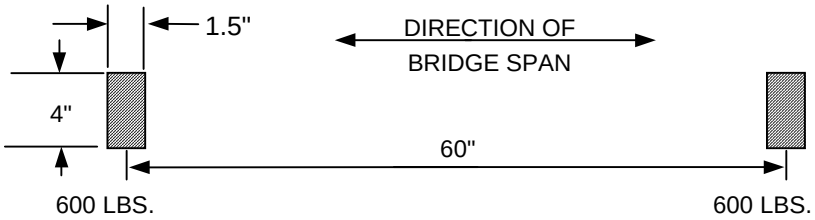

3.1.3.3 A 10,000 pound four wheeled vehicle with the appropriate wheelbase, tire track and tire print area as shown in the following diagram: (See Table I for the values corresponding to the selected vehicle.)

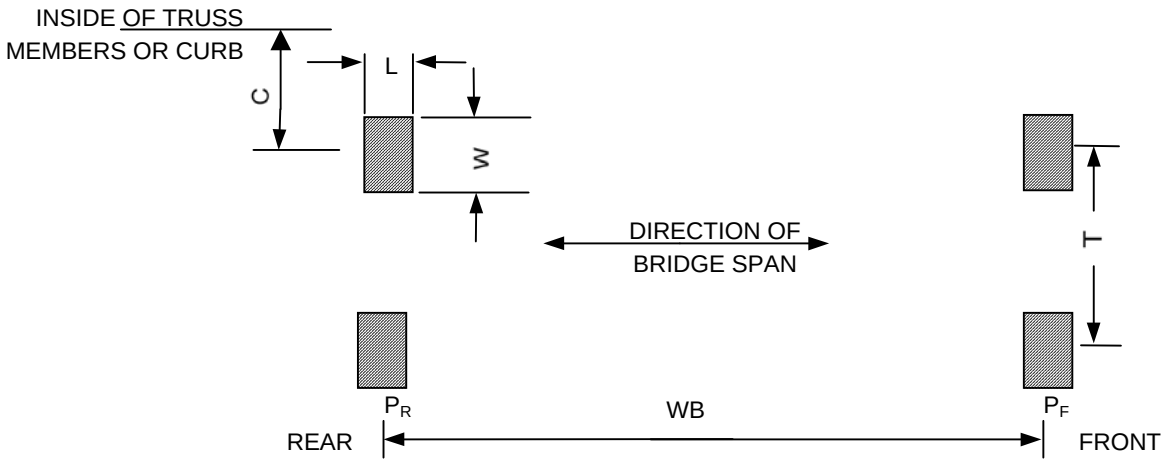

Vehicle	Axle and Wheel Spacings		Front Wheels			Rear Wheels			
Weight	WB	T	P_F	L	W	P_R	L	W	C*
4,000#	48"	32"	1,000#	2.0"	5.0"	1,000#	2.0"	5.0"	9"
6,000#	66"	48"	1,500#	2.5"	6.0"	1,500#	2.5"	6.0"	12"
8,000#	102"	60"	1,600#	3.0"	8.0"	2,400#	3.0"	8.0"	15"
10,000#	120"	72"	2,000#	3.5"	8.5"	3,000#	3.5"	8.5"	18"

(*C is the minimum dimension from center of wheel to the inside face of truss or curb.)

TABLE I

All of the concentrated or wheel loads shall be placed so as to produce the maximum stress in each member being analyzed. Critical stresses need be calculated assuming there is only one vehicle on the bridge at any given time. Assumptions that vehicles only travel down the center of the bridge or that the vehicle load is a uniform line load will not be allowed.

Each four wheeled vehicle load listed in Table I, up to and including the maximum weight vehicle selected, must be used in determining critical deck stresses. The wheel distribution for deck design shall be as specified in Section 4.3.1. Stringers shall be designed for the applied wheel loads assuming no lateral load distribution to adjacent stringers.

A vehicle impact allowance is not required.

3.1.4 Wind Load

3.1.4.1 Horizontal Forces

The bridge(s) shall be designed for a wind load of 25 pounds per square foot on the full vertical projected area of the bridge as if enclosed. The wind load shall be applied horizontally at right angles to the longitudinal axis of the structure.

The wind loading shall be considered both in the design of the lateral load bracing system and in the design of the truss vertical members, floor beams and their connections.

3.1.4.2 Overturning Forces

The effect of forces tending to overturn structures shall be calculated assuming that the wind direction is at right angles to the longitudinal axis of the structure. In addition, an upward force shall be applied at the windward quarter point of the transverse superstructure width. This force shall be 20 pounds per square foot of deck.

3.1.7 Top Chord/Railing Loads

The top chord, truss verticals, and floor beams shall be designed for lateral wind loads (per section 3.1.4.1) and for any loads required to provide top chord stability as outlined in Section 3.3.6; however, in no case shall the load be less than 50 pounds per lineal foot or a 200 pound point load, whichever produces greater stresses, applied in any direction at any point along the top chord or at the top of the safety system (42" or 54" above deck level), if higher than the top chord.

3.1.9 Load Combinations

The loads listed herein shall be considered to act in the following combinations, whichever produce the most unfavorable effects on the bridge superstructure or structural member concerned.
[DL=Dead Load; LL = Live Load; WL = Wind Load; VEH = Vehicle Load]

DL + LL
DL + VEH
DL+WL
DL+LL+WL
DL+VEH+.3WL

NOTE: Allowable stresses may be increased 1/3 above the values otherwise provided when produced by wind loading, acting alone or in combination with the design dead and live loads.

It shall be the responsibility of the foundation engineer to determine any additional loads (i.e. earth pressure, stream force on abutments, wind loads other than those applied perpendicular to the long axis of the bridge, etc.) and load combinations required for design of the abutments.

3.2 Design Limitations

3.2.1 Deflection

3.2.1.1 Vertical Deflection

The vertical deflection of the main trusses due to service pedestrian live load shall not exceed 1/400 of the span.

The vertical deflection of cantilever spans of the structure due to service pedestrian live load shall not exceed 1/300 of the cantilever arm length.

The deflection of the floor system members (floor beams and stringers) due to service pedestrian live load shall not exceed 1/360 of their respective spans.

The service pedestrian live load shall be 85 PSF, reduced in accordance with Section 3.1.2.1, but should in no case be less than 65 PSF for deflection checks.

Deflection limits due to occasional vehicular traffic shall not be considered.

3.2.1.2 Horizontal Deflection

The horizontal deflection of the structure due to lateral wind loads shall not exceed 1/500 of the span under an 85 MPH (25 PSF) wind load.

3.2.2 Minimum Thickness of Metal

The minimum thickness of all structural steel members shall be 3/16" nominal and be in accordance with the AISC Manual of Steel Constructions' "Standard Mill Practice Guidelines". For ASTM A500 and ASTM A847 tubing, the section properties used for design shall be per the Steel Tube Institute of North America's Hollow Structural Sections "Dimensions and Section Properties".

3.3 Governing Design Codes / References

Structural members shall be designed in accordance with recognized engineering practices and principles as follows:

3.3.1 Structural Steel Allowable Stresses

American Institute of Steel Construction (AISC).

Structural steel design shall be in accordance with those sections of the "Manual of Steel Construction: Allowable Stress Design" related to design requirements and allowable stresses.

3.3.2 Welded Tubular Connections

American National Standards Institute / American Welding Society (ANSI/AWS) and the Canadian Institute of Steel Construction (CISC).

All welded tubular connections shall be checked, when within applicable limits, for the limiting failure modes outlined in the ANSI/AWS D1.1 Structural Welding Code or in accordance with the "Design Guide for Hollow Structural Section Connections" as published by the Canadian Institute of Steel Construction (CISC).

When outside the “validity range” defined in these design guidelines, the following limit states or failure modes must be checked:

* Chord face plastification
* Punching shear (through main member face)
* Material failure
    - Tension failure of the web member
    - Local buckling of a compression web member
* Weld failure
    - Allowable stress based on “effective lengths”
    - “Ultimate” capacity
* Local buckling of a main member face
* Main member failure:
    - Web or sidewall yielding
    - Web or sidewall crippling
    - Web or sidewall buckling
    - Overall shear failure

All tubular joints shall be plain unstiffened joints (made without the use of reinforcing plates) except as follows:

* Floor beams hung beneath the lower chord of the structure may be constructed with or without stiffener (or gusset) plates, as required by design.

* Floor beams which frame directly into the truss verticals (H-Section bridges) may be designed with or without end stiffening plates as required by design.

* Where chords, end floor beams and in high profiles the top end struts weld to the end verticals, the end verticals (or connections) may require stiffening to transfer the forces from these members into the end vertical.

* Truss vertical to chord connections.

NOTE: The effects of fabrication tolerances shall be accounted for in the design of the structure. Special attention shall be given to the actual fit-up gap at welded truss joints.

3.3.4 Wood

American Institute of Timber Construction (AITC), the U.S. Forest Products Laboratory, and the American Forest & Paper Association (AF&PA).

Sawn lumber shall be designed in accordance with the ANSI/AF&PA NDS, “National Design Standard for Wood Construction”, as published by the American Forest & Paper Association or the “Timber Construction Manual” as published by the American Institute of Timber Construction (AITC). Design properties for naturally durable hardwoods shall be in accordance with “Tropical Timbers of the World”, as published by the U.S. Forest Products Laboratory.

3.3.6 Top Chord Stability

Structural Stability Research Council (SSRC), formerly Column Research Council.

The top chord shall be considered as a column with elastic lateral supports at the panel points. The critical buckling force of the column, so determined, shall exceed the maximum force from dead load and live load (uniform or vehicular) in any panel of the top chord by not less than 50 percent for parallel chord truss bridges or 100 percent for bowstring bridges. The design approach to prevent top chord buckling shall be as outlined by E.C. Holt's research work in conjunction with the Column Research Council on the stability of the top chord of a half-through truss. See Appendix A for the calculation of the spring constant C and the determination of an appropriate K factor for out-of-plane buckling.

In addition, for the dead load plus vehicle load combination, the spring constant "C" furnished by the transverse "U-Frames" shall not be less than "C" required as defined by:

$$C\ required = \frac{1.46\ P_c}{L}$$

where P_c is the maximum top chord compression due to dead load plus the vehicle load times the appropriate safety factor (1.5 for parallel chord truss bridges or 2.0 for bowstring bridges) and L is the length in inches of one truss panel or bay.

For uniformly loaded bridges, the vertical truss members, the floor beams and their connections (transverse frames) shall be proportioned to resist a lateral force of not less than 1/100k times the top chord compressive load, but not less than .004 times that top chord load, applied at the top chord panel points of each truss. The top chord load is determined by using the larger top chord axial force in the members on either side of the "U-frame" being analyzed. For end frames, the same concept applies except the transverse force is 1% of the axial load in the end post member.
For bridges with vehicle loads, the lateral force applied at the top chord elevation for design of the transverse frames shall not be less than 1% of the top chord compression due to dead load plus any vehicle loading.

The bending forces in the transverse frames, as determined above, act in conjunction with all forces produced by the actual bridge loads as determined by an appropriate analysis which assumes that the floor beams are "fixed" to the trusses at each end.

NOTE: The effects of three dimensional loading (including "U-frame" requirements) shall be considered in the design of the structure. The "U-frame" forces shall be added to the forces derived from a three dimensional analysis of the bridge.

4.0 MATERIALS

4.1 Steel

4.1.1 Unpainted Weathering Steel

Bridges which are not to be painted shall be fabricated from high strength, low alloy, atmospheric corrosion resistant ASTM A847 cold-formed welded square and rectangular tubing and/or ASTM A588, or ASTM A242, ASTM A606 plate and structural steel shapes (Fy = 50,000 psi). The minimum corrosion index of atmospheric corrosion resistant steel, as determined in accordance with ASTM G101, shall be 6.0.

4.3 Decking

4.3.1 Hardwood Decking

4.3.1.1. Wood decking shall be naturally durable hardwood Ipe (Tabebuia Spp Lapacho Group). All planks shall be partially air dried to a moisture content of 15% to 20%, and shall be supplied S4S (surfaced four sides), E4E (eased four edges), with the edges eased to a radius of 1/8". Measured at 30% moisture content, the width and thickness shall not vary from specified dimensions by more than ± 0.04 inches. All planks shall be supplied with the end sealed with "Anchorseal" Mobil CER-M or an equal aquious wax log sealer.

All planks shall be graded as FEQ-CAH (First Export Quality -Clear All Heart) grading rules, defined as follows:

* Lumber shall be graded both faces and both edges.

* Lumber shall be straight grained, maximum slope of grain to be 1:10.
* Lumber shall be parallel cut without heart centers or sap wood.
* Lumber shall be in sound condition, free from worm holes or knots.
* Allowable Imperfections are:
  All faces: Natural drying checks, Discoloration caused by weathering or chemical reaction, Bow or Spring which can be removed using normal installation methods and tools.
* Imperfections Not Allowed:
  Longitudinal heart cracks, Internal cracks, Firm or Soft sap wood, Splits, End splits, Ring shades, Fungi affects (blue to gray, brown to red, white to yellow, or incipient decay), Deformation (twisting or cupping) which cannot be removed using normal installation methods and tools.

All planks shall meet or exceed the following mechanical properties (based on the 2" standard) as defined by the U.S. Forest Products Laboratory publications and testing data:

MC%	Modulus of Rupture	Modulus of Elasticity	Max. Crush Strength
12%	22,360 psi	3,140,000 psi	13,010 psi

Janka side hardness is 3680 lbs. at 12% moisture content
Average air-dry density is 66 to 75 pcf.
Basic specific gravity is 0.85 - 0.97.

All planks shall be naturally fire resistant without the use of any fire resistant preservatives to meet NFPA Class A and UBC Class I.

Planks shall be supplied that meet or exceed the Static Coefficient of Friction for both Neolite and leather shoes in accordance with ASTM Test Method C1028-89.

	FORCE IN POUNDS	
SHOE MATERIAL	DRY	WET
Neolite	0.73	0.69
Leather	0.55	0.79

For transverse wood decking, wheel loads shall be assumed to act on one plank only. The wheel loads shown in Section 3.1.3 shall be distributed on the plank along a length equal to the tire print width (W). The plank shall be designed for shear and bending in accordance with the support conditions and spacing. For design, the following unfactored allowable values shall be used:

Allowable Bending	=	3700 psi
Allowable Shear	=	320 psi
Modulus of Elasticity	=	3,000,000 psi

4.3.1.2 Wood Decking Attachment

* At time of installation, planks are to be placed tight together with no gaps.

* Every plank must be attached with at least one fastener at each end.

* All fasteners to be zinc plated. Self-tapping screws or hex-head bolts, with a steel plank holddown, are to be used at the ends of planks. Self-tapping screws or carriage bolts are to be used as interior connection fasteners when required. Power actuated fasteners will not be allowed.

* Planks are to be drilled prior to installation of bolts and/or screws.

* In addition to at least one fastener at each end of every plank (typical for all installations), planks for bridges with widths of 72” to 143” shall be attached with a minimum of two fasteners at a location approximately near the center of the bridge width. Bridges wider than 143” are to have two fasteners located at a minimum of two interior stringer locations, approximately at the third points of the bridge width.

NOTE: Attachments at the ends of the planks may be modified as required when obstructions, such as interior safety system elements, prevent installation of the specified holddown system.

5.0 WELDING

5.1 Welding

Welding and weld procedure qualification tests shall conform to the provisions of ANSI/AWS D1.1 “Structural Welding Code”, 1996 Edition. Filler metal shall be in accordance with the applicable AWS Filler Metal Specification (i.e. AWS A 5.28 for the GMAW Process). For exposed, bare, unpainted applications of corrosion resistant steels (i.e. ASTM A588 and A847), the filler metal shall be in accordance with AWS D1.1, Section 3.7.3.

5.2 Welders

Welders shall be properly accredited operators, each of whom shall submit certification of satisfactorily passing AWS standard qualification tests for all positions with unlimited thickness of base metal, have a minimum of 6 months experience in welding tubular structures and have demonstrated the ability to make uniform sound welds of the type required.

6.0 SUBMITTALS

6.1 Submittal Drawings

Schematic drawings and diagrams shall be submitted to the customer for their review after receipt of order. Submittal drawings shall be unique drawings, prepared to illustrate the specific portion of the work to be done. All relative design information such as member sizes, bridge reactions, and general notes shall be clearly specified on the drawings. Drawings shall have cross referenced details and sheet numbers. **All drawings shall be signed and sealed by a Professional Engineer who is licensed in accordance with Section 3.0.**

6.2 Structural Calculations

Structural calculations for the bridge superstructure shall be submitted by the bridge manufacturer and reviewed by the approving engineer. **All calculations shall be signed and sealed by a Professional Engineer who is licensed in accordance with Section 3.0.** The calculations shall include all design information necessary to determine the structural adequacy of the bridge. The calculations shall include the following:

* All AISC allowable stress checks for axial, bending and shear forces in the critical member of each truss member type (i.e. top chord, bottom chord, floor beam, vertical, etc.).

* Checks for the critical connection failure modes for each truss member type (i.e. vertical, diagonal, floor beam, etc.). Special attention shall be given to all welded tube on tube connections (see section 3.3.2 for design check requirements).

* All bolted splice connections.

* Main truss deflection checks.

* U-Frame stiffness checks (used to determine K factors for out-of-plane buckling of the top chord) for all half through or "pony" truss bridges.

* Deck design.

NOTE: The analysis and design of triangulated truss bridges shall account for moments induced in members due to joint fixity where applicable. Moments due to both truss deflection and joint eccentricity must be considered.

6.3 Welder certifications in compliance with AWS standard qualification tests.

6.4 Welding procedures in compliance with Section 5.1.

7.0 FABRICATION

7.1 General Requirements

7.1.1 Drain Holes

When the collection of water inside a structural tube is a possibility, either during construction or during service, the tube shall be provided with a drain hole at its lowest point to let water out.

7.1.2 Welds

Special attention shall be given to developing sufficient weld throats on tubular members. Fillet weld details shall be in accordance with AWS D1.1, Section 3.9 (See AWS Figure 3.2). Unless determined otherwise by testing, the loss factor “Z” for heel welds shall be in accordance with AWS Table 2.8. Fillet welds which run onto the

radius of a tube shall be built up to obtain the full throat thickness (See Figure 7.1). The maximum root openings of fillet welds shall not exceed 3/16" in conformance with AWS D1.1, Section 5.22. Weld size or effective throat dimensions shall be increased in accordance with this same section when applicable (i.e. fit-up gaps > 1/16").

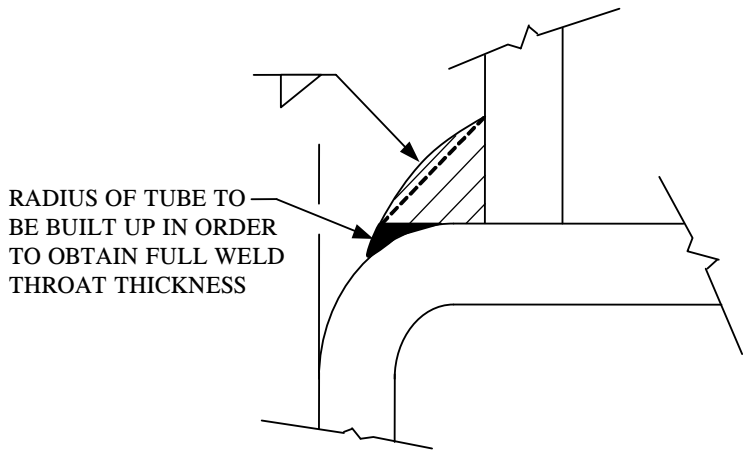

FIGURE 7.1
BUILD UP RADIUS WELD

The fabricator shall have verified that the throat thickness of partial joint penetration groove welds (primarily matched edge welds or the flare-bevel-groove welds on underhung floor beams) shall be obtainable with their fit-up and weld procedures. Matched edge welds shall be "flushed" out when required to obtain the full throat or branch member wall thickness.

For full penetration butt welds of tubular members, the backing material shall be fabricated prior to installation in the tube so as to be continuous around the full tube perimeter, including corners. Backing may be of four types:

* A "box" welded up from four (4) plates.

* Two "channel" sections, bent to fit the inside radius of the tube, welded together with full penetration welds.

* A smaller tube section which slides inside the spliced tube.

* A solid plate cut to fit the inside radius of the tube.

Corners of the "box" backing, made from four plates, shall be welded and ground to match the inside corner radii of the chords. The solid plate option shall require a weep hole either in the chord wall above the "high side" of the plate or in the plate itself. In all types of backing, the minimum fit-up tolerances for backing must be maintained at the corners of the tubes as well as across the "flats".

7.2 Quality Certification

Bridge(s) shall be fabricated by a fabricator who is currently certified by the American Institute of Steel Construction to have the personnel, organization, experience, capability, and commitment to produce fabricated structural steel for

the category “Major Steel Bridges” as set forth in the AISC Certification Program with Fracture Critical Endorsement. Quality control shall be in accordance with procedures outlined for AISC certification. For painted structures, the fabricator must hold a "Sophisticated Paint Endorsement" as set forth in the AISC certification program. Furthermore, the bridge(s) shall be fabricated in a facility owned and/or leased by the corporate owner of the manufacturer, and fully dedicated to bridge manufacturing.

8.0 FINISHING

8.1 Blast Cleaning

8.1.1 Bare applications of enhanced corrosion resistant steels.

All Blast Cleaning shall be done in a dedicated OSHA approved indoor facility owned and operated by the bridge fabricator. Blast operations shall use Best Management Practices and exercise environmentally friendly blast media recovery systems.

To aid in providing a uniformly “weathered” appearance, all exposed surfaces of steel shall be blast cleaned in accordance with Steel Structures Painting Council Surface Preparation Specifications No. 7 Brush-Off Blast Cleaning, SSPC-SP7 latest edition.

Exposed surfaces of steel shall be defined as those surfaces seen from the deck and from outside of the structure. Stringers, floor beams, lower brace diagonals and the inside face of the truss below deck and bottom face of the bottom chord shall not be blasted.

9.0 DELIVERY AND ERECTION

Delivery is made to a location nearest the site which is easily accessible to normal over-the-road tractor/trailer equipment. All trucks delivering bridge materials will need to be unloaded at the time of arrival.

The manufacturer will provide detailed, written instruction in the proper lifting procedures and splicing procedures (if required). The method and sequence of erection shall be the responsibility of others.

The bridge manufacturer shall provide written inspection and maintenance procedures to be followed by the bridge owner.

10.0 BEARINGS

10.1 Bearing Devices

Bridge bearings shall consist of a steel setting or slide plate placed on the abutment or grout pad. The bridge bearing plate which is welded to the bridge structure shall bear on this setting plate. One end of the bridge will be fixed by fully tightening the nuts on the anchor bolts at that end. The opposite end will have finger tight only nuts to allow movement under thermal expansion or contraction.

The bridge bearings shall sit in a recessed pocket on the concrete abutment. Minimum 28-day strength for the abutment concrete shall be 3,000 PSI. The bearing seat shall be a minimum of 16" wide. The step height (from bottom of bearing to top-of-deck) shall be determined by the bridge manufacturer.

Bridges in excess of 100 feet in length or bridges with dead load reactions of 15,000 pounds or more (at each bearing location) shall have teflon on teflon or stainless steel on teflon slide bearings placed between the bridge bearing plate and the setting plate. The top slide plate shall be large enough to cover the lower teflon slide surface at both temperature extremes.

11.0 FOUNDATIONS

Unless specified otherwise, the bridge manufacturer shall determine the number, diameter, minimum grade and finish of all anchor bolts. The anchor bolts shall be designed to resist all horizontal and uplift forces to be transferred by the superstructure to the supporting foundations. Engineering design of the bridge supporting foundations (abutment, pier, bracket and/or footings), including design of anchor bolt embedments, shall be the responsibility of the foundation engineer. The contractor shall provide all materials for (including anchor bolts) and construction of the bridge supporting foundations. The contractor shall install the anchor bolts in accordance with the manufacturer's anchor bolt spacing dimensions.

Information as to bridge support reactions and anchor bolt locations will be furnished by the bridge manufacturer after receipt of order and after the bridge design is complete.

12.0 PAYMENT

A partial payment or "deposit" for the prefabricated bridge shall be made upon order and storage as required by the terms of the manufacturer.

13.0 WARRANTY

The bridge manufacturer shall warrant that it can convey good title to the goods, that they are free of liens and encumbrances and that their steel structure(s) are free of design, material and workmanship defects for a period of ten years from the date of delivery. Durable hardwood decking and hardwood attachments shall carry a ten-year warranty against rot, termite damage or fungal decay. Other types of wood and decking material such as Southern Yellow Pine, Douglas Fir and composites carry no warranty. There are no warranties, expressed or implied with respect to structures sold hereunder which are used, supplied for use or made available for use in any nuclear application of which bridge manufacturer has not been notified in writing at the time of order of the structure(s).

This warranty shall not cover defects in the bridge caused by abuse, misuse, overloading, accident, improper installation, maintenance, alteration or any other cause not expressly warranted. This warranty does not cover damage resulting from or relating to the use of any kind of de-icing material. This warranty shall be void unless owner's records are supplied which show compliance with the minimum guidelines specified in the “Recommendations for the Inspection and Maintenance of Steadfast Vehicular Steel Bridges and Continental Pedestrian Steel Bridges,” attached hereto and incorporated herein by this reference.

Repair, replacement or adjustment, at the sole discretion of the bridge manufacturer, shall be the exclusive remedy for defects under this warranty. Under no circumstances shall the bridge manufacturer be liable for any consequential or incidental damages.

Any claim under this warranty shall be made promptly and directly to Bridge Manufacturer who shall have the option, at its sole discretion, to repair, replace or adjust any covered defect without charge to the original purchaser.

14.0 APPROVAL CHECKLIST

The following checklist will be used in the evaluation of all submittals to assure compliance with the Special Specifications for Prefabricated Bridge. This checklist is considered the minimum acceptable requirements for compliance with these specifications. Any deviations from this checklist shall be considered grounds for rejection of the submittal. Any costs associated with delays caused by the rejection of the submittal, due to non-compliance with this checklist, shall be fully borne by the contractor and bridge supplier.

SUBMITTAL DRAWINGS
Data Required to be Shown:

- □ Bridge Elevation
- □ Bridge Cross Section
- □ All Member Sizes
- □ All Vertical Truss Members are Square or Rectangular Tubing
- □ Bridge Reactions
- □ General Notes Indicating
  - □ AISC Stress Conformance
  - □ Material Specifications to be Followed
  - □ Design Live Load
  - □ Design Vehicle Load (If Applicable)
  - □ Design Wind Load
  - □ Other Specified Design Loads
  - □ Welding Process
  - □ Blast Cleaning
  - □ Paint System to be Used (If Applicable)
- □ Paint Color Chart (If Applicable)
- □ Detailed Bolted Splices (If Applicable)
- □ Bolted Splice Location (If applicable)
- □ Signature and Seal of Professional Engineer, licensed in Accordance with Section 3.0

DESIGN CALCULATIONS
Data Required to be Shown:

- □ Data Input for 3-D Analysis of Bridge
  - □ Joint Coordinates & Member Incidences
  - □ Joint and Member Loads
  - □ Member Properties
  - □ Load Combinations
- □ AASHTO Member Stress Checks for Each Member Type
- □ Critical Connection Failure Mode Checks For Each Member Type
  - □ Chord Face Plastification Checks
  - □ Punching Shear Checks
  - □ Material Failure Checks (Truss Webs)
  - □ Weld Failure Checks (Effective Length)
  - □ Weld Failure Checks (Ultimate)
  - □ Local Buckling of the Main Member Face Checks
  - □ Main Member Yielding Failure Checks
  - □ Main Member Crippling Failure Checks
- □ Main Member Buckling Failure Checks
- □ Main Member Shear Failure Checks
- □ All Bolted Splice Checks (if applicable)
- □ Main Truss Deflection Checks
- □ Decking Material Checks
- □ "U-Frame" Stiffness Checks (if applicable)
- □ Interior and End Portal Design Checks (if applicable)
- □ Determination of Top Chord K Factor Based on "U-Frame" Stiffness (if applicable)
- □ Consideration of Individual Member Moments Due to Truss Deflection, Joint Fixity and Joint Eccentricity

FABRICATION SUBMITTALS
Data Required to be Shown:

- □** Written Installation Instructions
- □** Written Splicing Instructions
- □** Written Maintenance & Inspection Instructions
- □** Welder Certifications
- □** Welding Procedures
- □ Material Certifications (if applicable)
  - □ Structural Steel (if applicable)
  - □ Decking (if applicable)
  - □ Structural Bolts (if applicable)
  - □** Quality Control Section of AISC Certification Manual (if applicable)
  - □** Painter Certifications (if applicable)
  - □ Weld Testing Reports (if applicable)

** NOTE: These items are required to be submitted along with Submittal Drawings and Design Calculations. Those Fabrication Submittal Items not marked are to be submitted prior to shipment of the bridge.

Appendix A

1/K FOR VARIOUS VALUES OF CL/P_c and n

	n						
1/K	4	6	8	10	12	14	16
1.000	3.686	3.616	3.660	3.714	3.754	3.785	3.809
0.980		3.284	2.944	2.806	2.787	2.771	2.774
0.960		3.000	2.665	2.542	2.456	2.454	2.479
0.950			2.595				
0.940		2.754		2.303	2.252	2.254	2.282
0.920		2.643		2.146	2.094	2.101	2.121
0.900	3.352	2.593	2.263	2.045	1.951	1.968	1.981
0.850		2.460	2.013	1.794	1.709	1.681	1.694
0.800	2.961	2.313	1.889	1.629	1.480	1.456	1.465
0.750		2.147	1.750	1.501	1.344	1.273	1.262
0.700	2.448	1.955	1.595	1.359	1.200	1.111	1.088
0.650		1.739	1.442	1.236	1.087	0.988	0.940
0.600	2.035	1.639	1.338	1.133	0.985	0.878	0.808
0.550		1.517	1.211	1.007	0.860	0.768	0.708
0.500	1.750	1.362	1.047	0.847	0.750	0.668	0.600
0.450		1.158	0.829	0.714	0.624	0.537	0.500
0.400	1.232	0.886	0.627	0.555	0.454	0.428	0.383

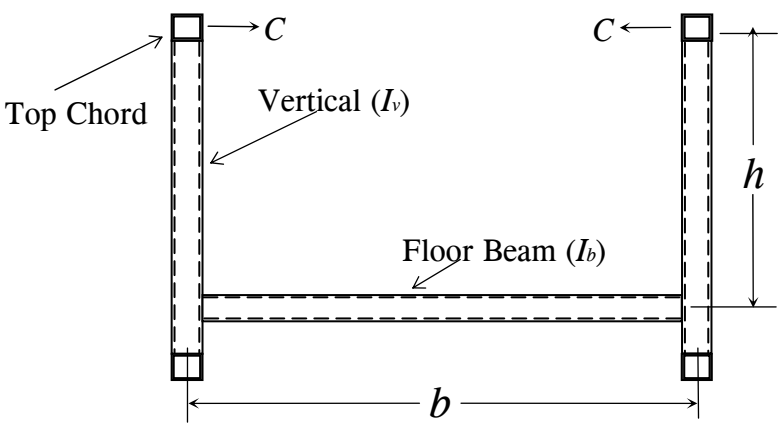

“ U - Frame”

Where: $$C = \frac{E}{h^2\,[h/3I_v + b/2I_b]}$$

$L = Length\ in\ inches\ of\ one\ truss\ panel$

$P_c = Buckling\ Load\ (= Top\ Chord\ Compression\ x\ F.S.)$

$n = Number\ of\ Panels$

Reference: Galambos, T.V. (1988) “Guide to Stability Design Criteria for Metal Structures”, 4th Ed., PP 515-529. Copyright © 1988. Reprinted by permission of John Wiley and Sons, Inc.

CBC Engineers & Associates

February 18, 2010

Contech Construction Products, Inc.
5660 Greenwood Plaza
Suite 455
Englewood, CO 80111

Attn: Todd Sanville
Manager – Inside Project Consultant

Re: Design of Abutments on Driven Pile Foundations for **Pedestrian Bridge #4** Structure, Cascades Trail, Bloomington, Indiana; CBC Report No. 12058-4-0210-05

Gentlemen:

We are pleased to submit our design of the abutments on driven pile foundations for the above referenced project. The structure is a pedestrian bridge with a length of 90'-2" (back wall to back wall) and a width of 11'-7". We understand that others are responsible for the bridge design and that CBC Engineers and Associates, Ltd. is responsible for the design of the abutments upon which the bridge will rest, and the driven pile foundations only.

If you have any questions, please contact us.

Respectfully submitted,

CBC Engineers & Associates, Ltd.

Deepa Nair
Project Engineer

INFORMATION ONLY

David C. Cowherd, M.S., P.E.
CEO and Chief Engineer

DN/DCC/lb
1-Client
1-Hugh Mickel
1-File

CBC Engineers & Associates, Ltd.
125 Westpark Road Centerville, Ohio 45459
Phone: 937-428-6150 FAX: 937-428-6154 Email: cbceng@cbceng.com

TABLE OF CONTENTS

SECTION **PAGE NO.**

I TEXT

1.0 AUTHORIZATION 1
2.0 STRUCTURE DESCRIPTION 1
3.0 FOUNDATION DESIGN 2
4.0 DESIGN OF BACKFILL BEHIND THE ABUTMENTS 2
5.0 DESIGN OF ABUTMENTS 3
6.0 FOUNDATIONS 4
7.0 PILE CAPS 5
8.0 SCOUR 6
9.0 WARRANTY 6

II SPECIFICATIONS

APPENDIX A - CALCULATIONS

INFORMATION ONLY

1.0 AUTHORIZATION

Authorization to proceed with this project was given by Todd Sanville of Contech Construction Products, Inc. Work was to proceed in accordance with CBC Engineers & Associates, Ltd. Quotation No. 10-050-05 dated February 2, 2010, and the terms and conditions of the Master Agreement for Engineering Services dated July 30, 2009.

2.0 STRUCTURE DESCRIPTION

The structure to be constructed at this location is a pedestrian bridge with a width of approximately 11'-7" and length of about 90'-2" (back wall to back wall). The structure is supported on full length trusses which bear on abutments on either side of the structure. The purpose of this report is to provide the design of the abutments for the structure. It is necessary to support the bridge on abutments bearing on steel HP pile foundations driven to refusal into competent bedrock. The loads on the abutments are both vertical and horizontal. Each abutment acts as a retaining wall to retain the soil behind it as well as supporting the weight of the bridge. Figure 1 shows a conceptual view of the loads on the abutment.

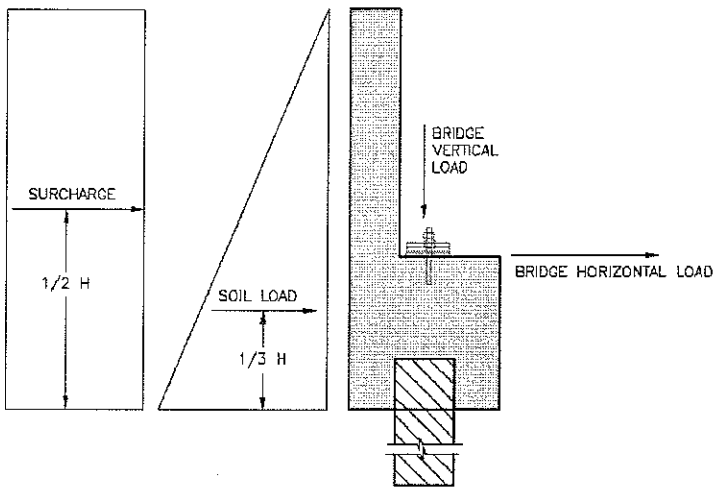

Figure 1

INFORMATION ONLY

The abutments act as concrete retaining walls that will hold back the fill in the approaches to the bridge. Others are responsible for the bridge design.

3.0 FOUNDATION DESIGN

We have been provided a geotechnical engineering report for this project from Earth Exploration, Inc. (their Project No. 1-09-035 dated June 8, 2009). The following is an excerpt from that report.

> *"Based on the results of our field and laboratory observations and the project concepts, we anticipate support of the pedestrian bridges could be provided on shallow or deep foundation elements depending on the depth to rock. The following table provides a summary of the probable foundation alternatives."*

Bridge Location	*Depth to competent rock*		*Probable Foundation Alternative*
(per exploratory location)	*ft*	*Elevation*	
B-3 & S-1	*5 to 8*	*663 to 665*	*Spread Foundation*
B-5 & S-2	*6 to 10*	*631 to 634*	*Spread Foundation*
B-6 & S-3	*10 to 11*	*620*	*Spread Foundation*
B-8 & B-9	*19*	*572 to 573*	*Driven or Drilled Foundation*
B-10 & S-5	*16 to 17*	*579*	*Driven or Drilled Foundation*

Bridge # 4 is located near borings B-8 and B-9, and therefore HP12x53 piles driven to refusal into competent bedrock have been designed to support the abutments as per the above recommendations. As per INDOT Design Manual Section 66-3.02(02), the maximum bearing capacity of a steel HP pile is based on an allowable maximum stress of 0.25 times the yield strength and the minimum recommended yield strength of such piles is 50 ksi. Therefore HP12x53 piles driven to refusal into competent rock can be designed for a vertical load capacity of 193 kips and this vertical capacity must be field verified.

4.0 DESIGN OF BACKFILL BEHIND THE ABUTMENTS

The backfill immediately behind the abutments should consist of a free draining granular material so that water is not built up behind the abutments. The material should be placed in accordance with the plan and specifications in this report, and weep holes should be placed in the abutments to allow free drainage of water. The backfill material should be AASHTO A-1-a material compacted to 95% of the maximum Modified Proctor dry unit weight and placed in

INFORMATION ONLY

accordance with specifications for backfill included in Section II of this report. Care must be exercised in the placement of the fill to ensure that large equipment is not used adjacent to the walls. Hand equipment should be used within 3 feet of the walls with larger equipment being used outside the 3 feet. It is recommended that the select backfill be extended to a distance of 6' laterally from the edge of the abutment toward the roadway fill and a filter fabric should be placed between the backfill and the soil fill to be placed in the roadway section. Figure 2 shows the recommended extent of the granular fill and the filter fabric.

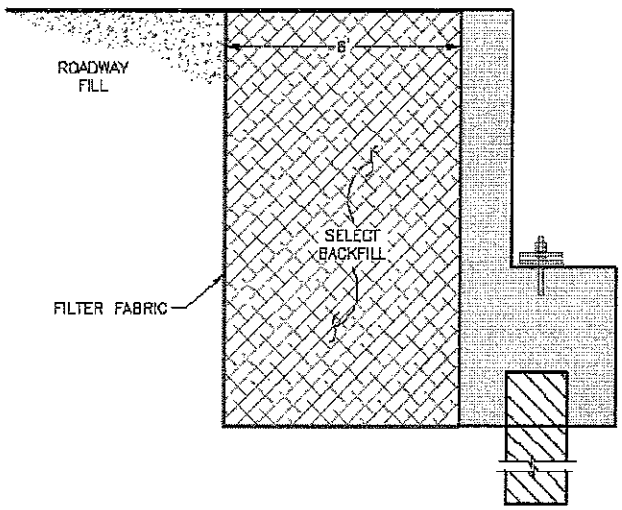

Figure 2

5.0 DESIGN OF ABUTMENTS

The bridge loading on each of the abutments is as follows:

TABLE 1

ABUTMENT REACTIONS (PER ABUTMENT)

Vertical Dead Load	15.5 kips
Vertical Live Load	48.9 kips
Wind Load	3.38 kips
Horizontal Load (wind)	6.24 kips
Longitudinal Load (thermal)	5.4 kips

The total vertical load on each abutment is 107.5 kips including abutment weight. The total horizontal load is 0.46 kips/ft. from the bridge acting in a transverse direction; and 1.7

INFORMATION ONLY

kips/ft. from the soil acting in a longitudinal direction. Figure 3 shows the three-dimensional loading on each abutment.

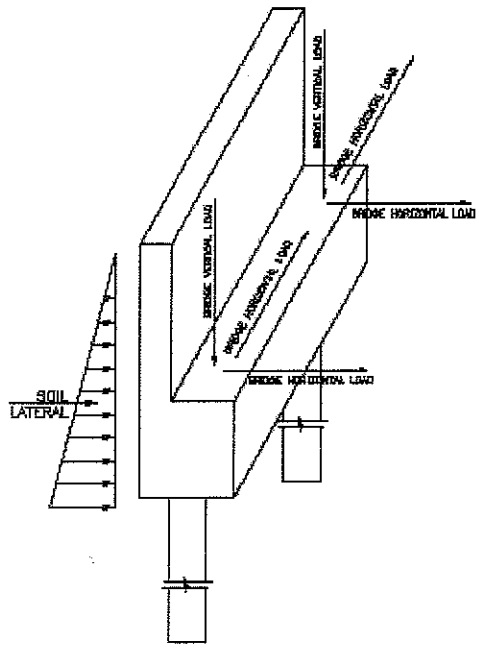

Figure 3

The amount of steel and concrete has been designed for these loads and the foundations have been designed for both the vertical and horizontal loads. The calculations are included in Appendix A.

Each abutment must be stable against sliding and overturning due to the vertical and horizontal loads. Based on the loading conditions each abutment must be 30" wide and contain the reinforcing steel shown on the drawings.

6.0 FOUNDATIONS

The foundations of the abutments must be designed to take the horizontal as well as the vertical loads. In addition to the above, the abutment foundation must be designed for scour protection, so it is not scoured out by high water. The foundations for the abutments are to be steel HP12x53 piles driven to refusal into the competent bedrock. An HP12x53 steel pile driven to refusal into the competent bedrock can be designed for a vertical load of 193 kips according to the INDOT Design Manual Section 66-3.02(02). The piles must also be designed for the horizontal loads placed upon them. Figure 4 shows the loading at the top of the pile.

INFORMATION ONLY

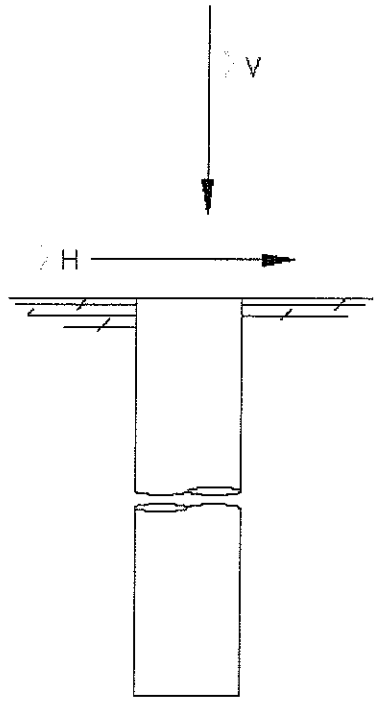

Figure 4

The pile foundation has been analyzed using the computer program LPILE. We understand it is desirable to use HP12x53 steel piles. An HP12x53 steel pile driven to refusal into competent bedrock will carry an allowable vertical load of 193 kips. Based on the vertical reaction at each abutment and the horizontal loads applied at the pile head, the piles must be HP12x53 piles with 3 piles per abutment.

7.0 PILE CAPS

The pile caps must be designed as a beam to transfer the load of the abutments onto the piles. Based on the loadings on the abutments, the pile caps must be 30" wide. The single line of piles are tied to the cap by extending 2'-0" of the pile into the pile cap as shown on the drawings. A typical section through the pile cap showing the anchoring to the piles and the abutment is shown in Figure 5.

INFORMATION ONLY

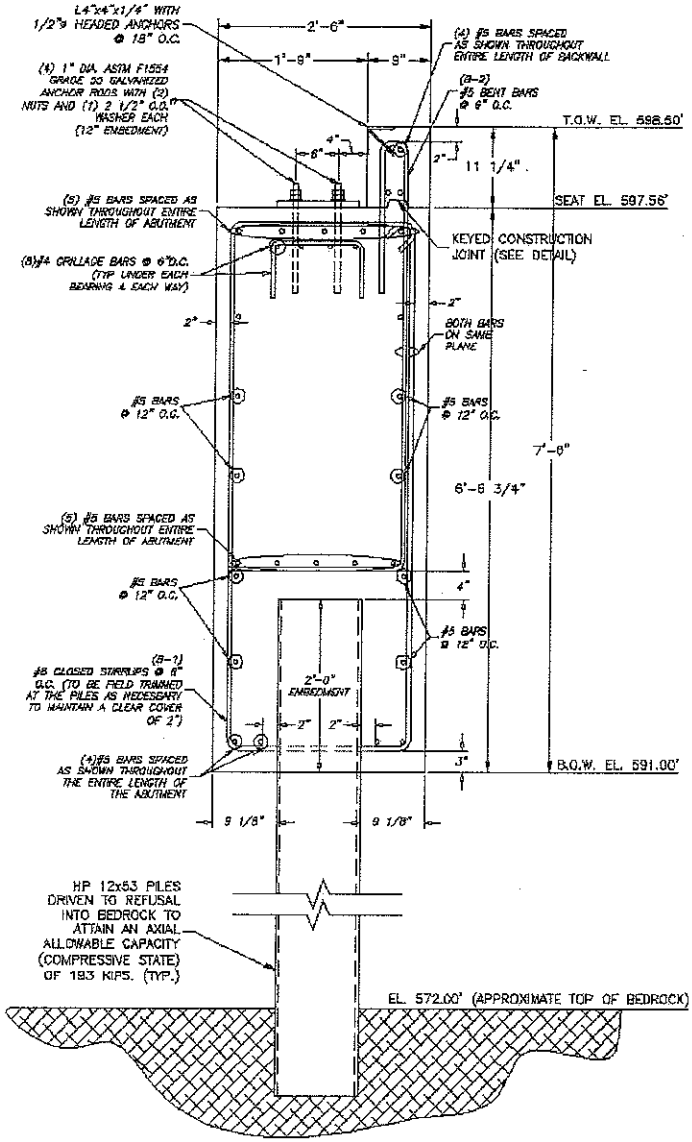

Figure 5

8.0 SCOUR

It is beyond the scope of this report to evaluate scour. The bottom of pile caps, and depth of the piles should be evaluated for scour before foundations are poured.

9.0 WARRANTY

Our professional services have been performed, our findings obtained and our recommendations prepared in accordance with generally accepted geotechnical engineering principles and practices. No other warranty, express or implied, is made.

INFORMATION ONLY

This report has been prepared for the exclusive use of Contech Construction Products Inc., for specific application to the structure herein described. Specific recommendations have been provided in the various sections of the report. The report shall, therefore, be used in its entirety. This report is not a bidding document and shall not be used for that purpose. Anyone reviewing this report must interpret and draw their own conclusions regarding specific construction techniques and methods chosen. CBC Engineers & Associates, Ltd. is not responsible for the independent conclusions, opinions or recommendations made by others.

INFORMATION ONLY

CONTECH CONSTRUCTION PRODUCTS, INC.
DESIGN OF ABUTMENTS ON DRIVEN PILE FOUNDATIONS FOR **PEDESTRIAN BRIDGE #4**
CASCADES TRAIL
BLOOMINGTON, INDIANA

INFORMATION ONLY

INDEX

SHT	
1	TITLE SHEET / INDEX
2	PLAN & PROFILE
3	ABUTMENT DETAILS
4	SPECIFICATIONS

INFORMATION ONLY

CBC ENGINEERS
DAYTON, OHIO

TITLE SHEET / INDEX

Drawn By	Date	CONTECH CONSTRUCTION PRODUCTS, INC. DESIGN OF ABUTMENTS ON DRIVEN PILE FOUNDATIONS FOR **PEDESTRIAN BRIDGE #4** CASCADES TRAIL BLOOMINGTON, INDIANA
BMW	2/18/10	
Approved By	Date	

Scale	Project No.	Rev.	Sheet
GRAPHIC	CBC-12058-4	-	1 OF 4

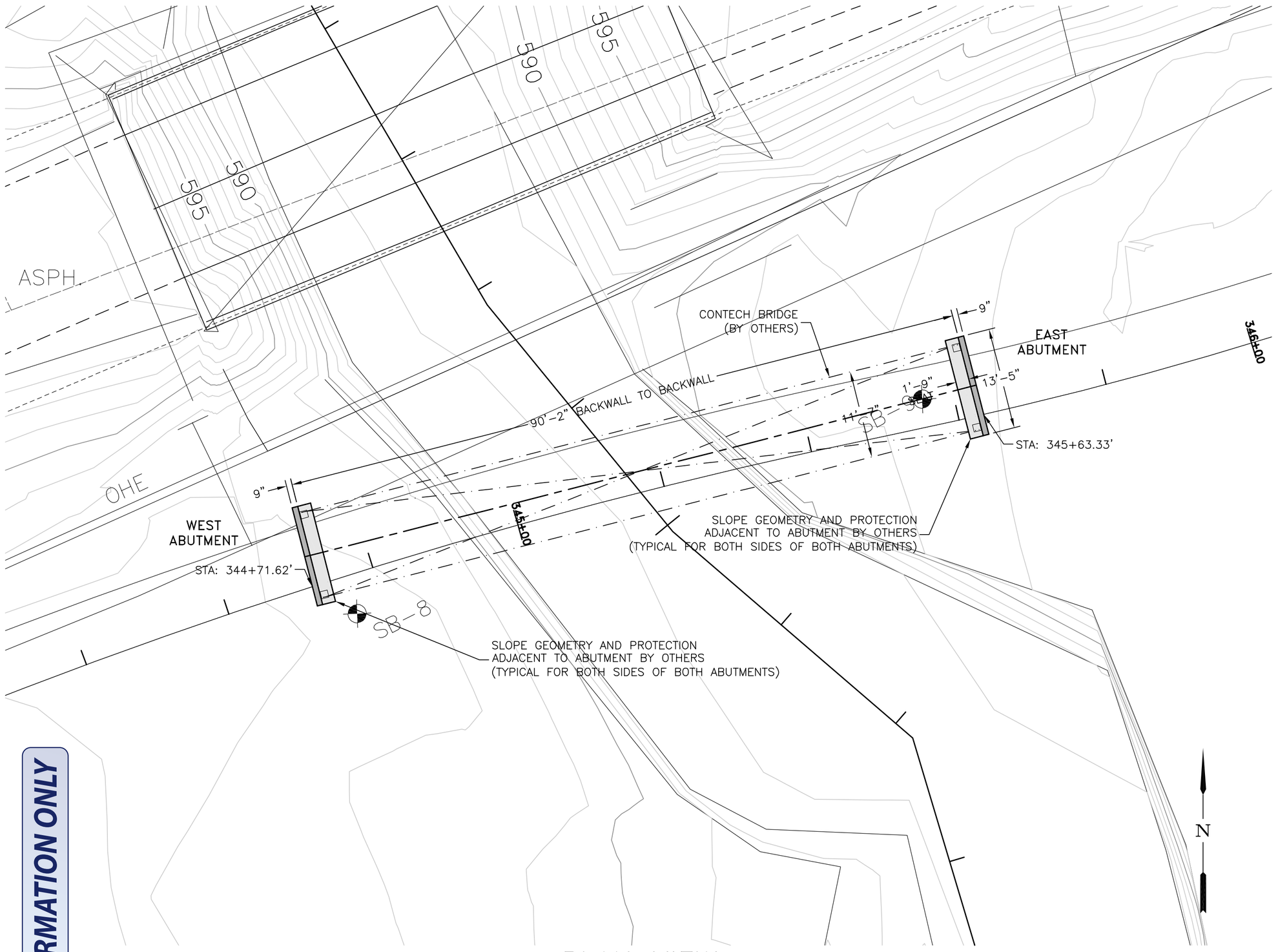

PLAN VIEW

GRAPHIC SCALE

10' 5' 0 10' 20'

CONTOUR INTERVAL = 1'

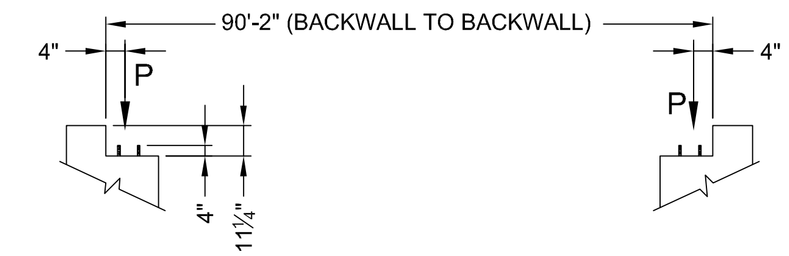

ANCHOR BOLT ELEVATION

COMBINE REACTIONS AS PER LOCAL OR GOVERNING BUILDING CODES AS REQUIRED

BRIDGE REACTIONS		+ DOWNWARD LOAD - UPWARD LOAD	
	P (LBS)	H (LBS)	L (LBS)
DEAD LOAD	7,750		
UNIFORM LIVE LOAD	19,445		
VEHICLE LOAD	5,000		
WIND UPLIFT 20 PSF WINDWARD / LEEWARD	-7,540 / -2,513		
WIND	±1,690	6,235	
THERMAL			2,715

"P" - VERTICAL LOAD EACH BASE PLATE (4 PER BRIDGE)
"H" - HORIZONTAL LOAD EACH FOOTING (2 PER BRIDGE)
"L" - LONGITUDINAL LOAD EACH BASE PLATE (4 PER BRIDGE)

BRIDGE LIFTING WEIGHT: 31,000 LBS

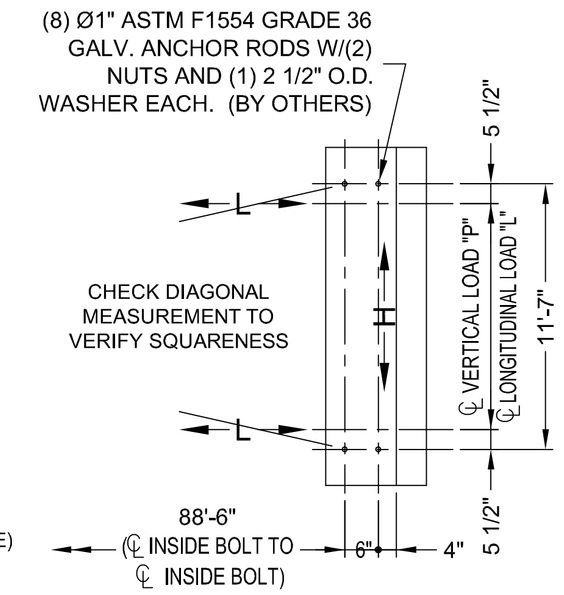

PLAN

NOTE:
DETAILS FROM CONTECH DRAWINGS No. 145049 DATED 2/10.

NOTE:
1.) CONCRETE SHALL BE f'c = 4,000 psi.
2.) ALL REINFORCEMENT SHALL BE ASTM A-615, GRADE 60.
3.) HP 12x53 PILES DRIVEN TO REFUSAL INTO BEDROCK TO ATTAIN AN AXIAL. ALLOWABLE CAPACITY (COMPRESSIVE STATE) OF 193 KIPS. TO BE FIELD VERIFIED.
4.) SCOUR IS NOT ADDRESSED HEREIN AND IS THE RESPONSIBILITY OF OTHERS THAN CBC ENGINEERS.

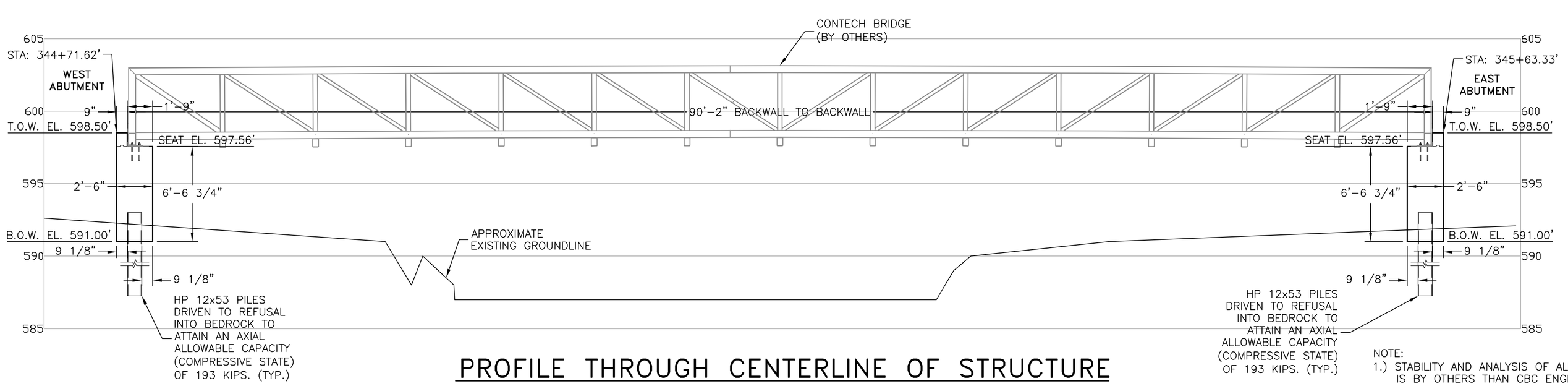

PROFILE THROUGH CENTERLINE OF STRUCTURE

GRAPHIC SCALE

5' 2.5' 0 5' 10'

NOTE:
1.) STABILITY AND ANALYSIS OF ALL EXISTING WALLS IS BY OTHERS THAN CBC ENGINEERS.

2.) IF COMPETENT ROCK IS NOT ENCOUNTERED AT THE STATED ELEVATIONS, CBC ENGINEERS SHOULD BE NOTIFIED SO THAT A REVIEW OF THE DESIGN BASED ON THE ACTUAL SITE CONDITIONS CAN BE MADE.

INFORMATION ONLY

INFORMATION ONLY

CBC ENGINEERS
DAYTON, OHIO

PLAN & PROFILE

Drawn By	Date	CONTECH CONSTRUCTION PRODUCTS, INC. DESIGN OF ABUTMENTS ON DRIVEN PILE FOUNDATIONS FOR **PEDESTRIAN BRIDGE #4** CASCADES TRAIL BLOOMINGTON, INDIANA		
BMW	2/18/10			
Approved By	Date			
Scale		Project No.	Rev.	Sheet
GRAPHIC		CBC-12058-4	-	2 OF 4

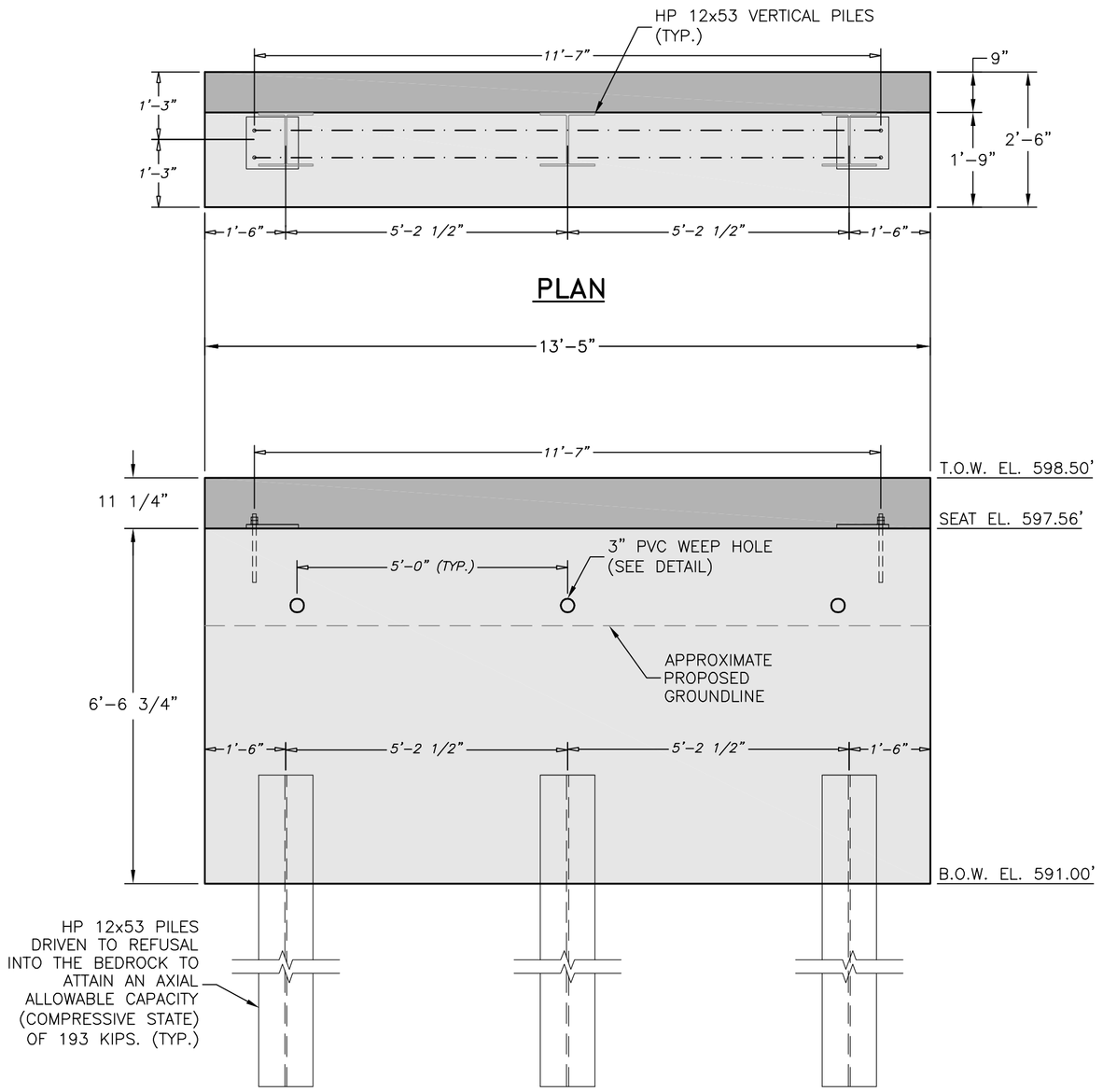

PLAN

ELEVATION

TYPICAL ABUTMENT

GRAPHIC SCALE

2' 1' 0 2' 4'

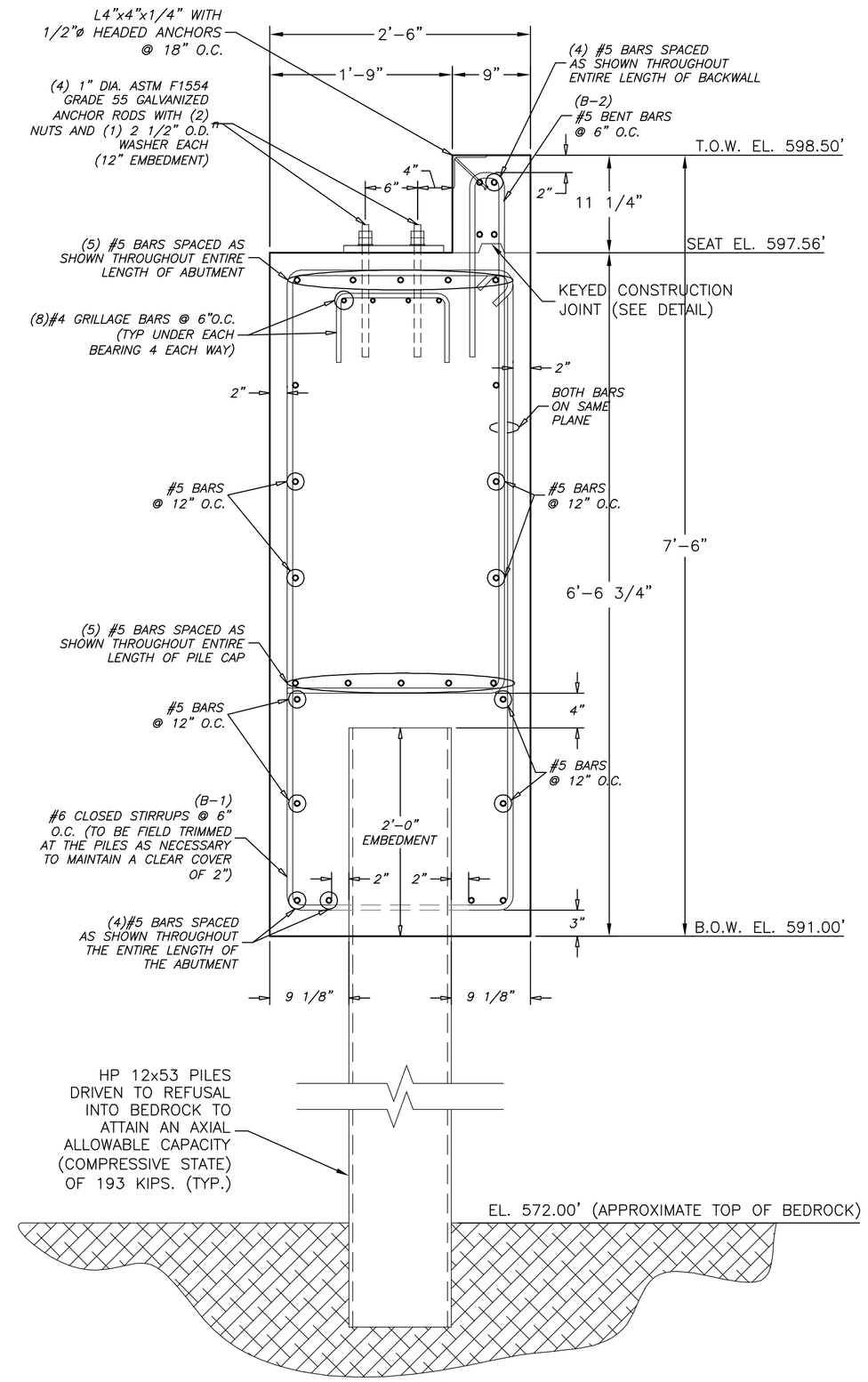

TYPICAL ABUTMENT SECTION AT PILES

GRAPHIC SCALE

1' 0.5' 0 1' 2'

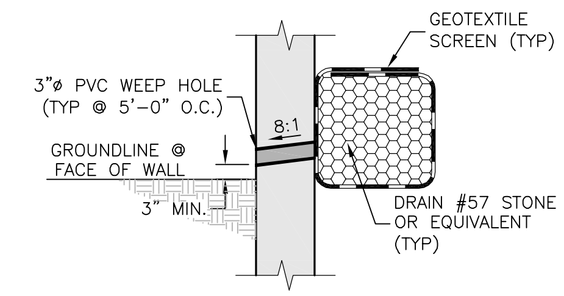

WEEP HOLE DETAIL

NOT TO SCALE

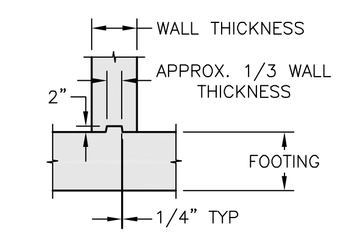

KEYED CONSTRUCTION JOINT DETAIL

NOT TO SCALE

NOTE:
1.) CONCRETE SHALL BE f'c = 4,000 psi.
2.) ALL REINFORCEMENT SHALL BE ASTM A-615, GRADE 60.
3.) HP 12x53 PILES DRIVEN TO REFUSAL INTO BEDROCK TO ATTAIN AN AXIAL. ALLOWABLE CAPACITY (COMPRESSIVE STATE) OF 193 KIPS. TO BE FIELD VERIFIED.
4.) SCOUR IS NOT ADDRESSED HEREIN AND IS THE RESPONSIBILITY OF OTHERS THAN CBC ENGINEERS.

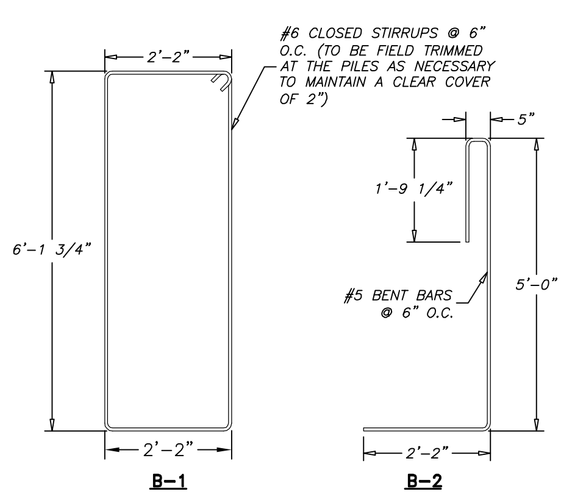

REBAR DETAILS

GRAPHIC SCALE

2' 1' 0 2' 4'

NOTE:
1.) STABILITY AND ANALYSIS OF ALL EXISTING WALLS IS BY OTHERS THAN CBC ENGINEERS.
2.) IF COMPETENT ROCK IS NOT ENCOUNTERED AT THE STATED ELEVATIONS, CBC ENGINEERS SHOULD BE NOTIFIED SO THAT A REVIEW OF THE DESIGN BASED ON THE ACTUAL SITE CONDITIONS CAN BE MADE.

INFORMATION ONLY

INFORMATION ONLY

CBC ENGINEERS
DAYTON, OHIO

ABUTMENT DETAILS

Drawn By	Date	CONTECH CONSTRUCTION PRODUCTS, INC. DESIGN OF ABUTMENTS ON DRIVEN PILE FOUNDATIONS FOR **PEDESTRIAN BRIDGE #4** CASCADES TRAIL BLOOMINGTON, INDIANA
BMW	2/18/10	
Approved By	Date	

Scale	Project No.	Rev.	Sheet
GRAPHIC	CBC-12058-4	-	3 OF 4

I – GENERAL

1.0 STANDARDS AND DEFINITIONS

1.1 STANDARDS - All standards refer to latest edition unless otherwise noted.

1.1.1 ASTM D-698-70 (Method C) "Standard Test Methods for Moisture. Density Relations of Soils and Soil Aggregate Mixtures Using 5.5-lb (2.5 kg.) Rammer and 12" (305-mm) Drop".

1.1.2 ASTM D-1557 "Test Method for Laboratory Compaction Characteristics of Soil Using Modified Effort (56,000 ft-lbf/ft^3 [2,700 kN · m/m^3]).

1.1.3 ASTM D-2922 "Standard Test Method for Density of Soil and Soil Aggregate in Place by Nuclear Methods (Shallow Depth)".

1.1.4 ASTM D-1556 "Standard Test Method for Density of Soil in Place by the Sand-Cone Method".

1.1.5 All construction and materials shall be in accordance with current AASHTO Specifications.

1.2 DEFINITIONS

1.2.1 Owner - In these specifications the word "Owner" shall mean City of Bloomington, Indiana

1.2.2 Engineer - In these specifications the word "Engineer" shall mean the Owner designated engineer.

1.2.3 Design Engineer - In these specifications the words "Design Engineer" shall mean CBC Engineers and Associates, Ltd.

1.2.4 Contractor - In these specifications the word "Contractor" shall mean the firm or corporation undertaking the execution of any work under the terms of these specifications.

1.2.5 Approved - In these specifications the word "approved" shall refer to the approval of the Engineer or his designated representative.

1.2.6 As Directed - In these specifications the words "as directed" shall refer to the directions to the Contractor from the Owner or his designated representative.

2.0 GENERAL CONDITIONS

2.1 The Contractor shall furnish all labor, material and equipment and perform all work and services except those set out and furnished by the Owner, necessary to complete in a satisfactory manner the site preparation, excavation, pile foundations, abutments, filling, compaction, and grading as shown on the plans and as described therein.

This work is to be accomplished under the observation of the Owner or his designated representative.

2.2 The Contractor shall examine, investigate and inspect the construction site as to the nature and location of the work, and the general and local conditions at the construction site, including, without limitation, the character of surface or subsurface conditions and obstacles to be encountered on and around the construction site; and shall make such additional investigation as he may deem necessary for the planning and proper execution of the work.

If conditions other than those indicated are discovered by the Contractor, the Owner should be notified immediately. The material which the Contractor believes to be a changed condition should not be disturbed so that the owner can investigate the condition.

II – ABUTMENTS

1.0 The abutments shall be of the size and in the locations shown on the construction drawings.

2.0 The concrete and steel for the abutments shall meet the requirements of Section VI of these specifications.

3.0 Weep holes shall be placed in the abutments at the locations shown on the construction drawings.

3.1 Round weep holes shall be placed in the endwalls as shown on the construction drawings. A granular envelope, consisting of clean angular, #57 stone or equivalent, shall be placed behind each weep hole for a distance of approximately 18" from all edges of the weep hole. A free-draining geotextile screen shall be placed between the weep hole and the stone to prevent erosion of the stone.

III – PILE FOUNDATIONS

1.0 GENERAL

The pile materials, equipment and installation procedure shall be in accordance INDOT Standard Specification for Driven Piles Section 701, 915.02 and Chapter 66 of the INDOT Design Manual and the following specifications for this project.

1.1 DELIVERY AND STORAGE

1.1.1 During delivery, storage, and handling, support long piles to preclude damage.

1.2 METHOD OF MEASUREMENT

1.2.1 Supply and installation of piles will be measured in total length of piles accepted and incorporated into work.

1.2.2 Pile toe reinforcement, pile shoes, pile splices, pile caps are incidental to the supply and installation of the piles and will not be separately measured.

1.2.3 Mobilization and demobilization of and costs for all equipment are incidental to the supply and installation of the steel piles and will be measured separately.

2.0 PRODUCTS

2.1 MATERIALS

2.1.1 Steel pile shall be minimum section HP 12" x 53 lbs/ft and driven to refusal into competent bedrock to achieve a minimum allowable axial capacity of 193 kips as per INDOT Design Manual Section 66-3.02(02).

2.1.2 Steel H-piles are to be manufactured in accordance with INDOT Standard Specifications, Section 915.02 and shall meet the requirements of ASTM A709/A709M, Grade 50 (50 ksi minimum yield strength).

2.1.3 Steel piles are to have the following tolerances when delivered to the site:

2.1.3.1 The maximum curvature of new piles measured along two perpendicular planes before driving, when the beam is not subjected to bending forces, must not exceed 0.1%. (Curvature measurements are taken along a vertical plane and turning the pile 90 degrees between the two series of measurement).

2.1.4 Supplier must deliver pile in lengths as indicated by the Engineer.

2.1.5 Pile toe reinforcement is to be in accordance with ASTM A709/A709M, Grade 50 and INDOT Standard Specifications Section 701.

2.1.6 Pile splices are to be in accordance with ASTM A709/709M, Grade 50 and INDOT Standard Specifications Section 701.

2.2 FABRICATION

2.2.1 Fabricate full length piles to eliminate splicing during installation wherever possible.

2.2.2 Driving shoes may be installed during shop fabrication or as part of field work.

2.2.3 Full length piles may be fabricated from piling material by splicing lengths of steel piles together. Use complete joint penetration groove welds or a premanufactured splice.

2.2.4 The deviation of the pile from a straight line after splicing shall not exceed 0.5%.

3.0 EXECUTION

3.1 INSTALLATION

3.1.1 Install piles in accordance with Section 4 of AASHTO specifications, Division II "Driven Foundation Piles", and with INDOT Standard Specifications Section 701.

3.1.2 Use driving helmet to protect pile head.

3.1.3 Do not use any loose inserts in the helmet. The Engineer is sole judge of the acceptability of the helmet.

3.1.4 Hold pile securely and accurately in position while driving.

3.1.5 Deliver hammer impacts concentrically and in direct alignment with pile taking care to avoid forcing pile laterally or bending pile. If in the Engineer's opinion, lateral or bending forces unduly affect the pile, the Contractor must stop and rectify the situation at his own expense and to the satisfaction of the Engineer.

3.1.6 Reinforce pile heads, if and as necessary.

3.1.7 Advance pile to the required tip depth.

3.1.8 Do not drive piles within a radius of 20 feet of concrete which has been in place for a time shorter than 3 days unless authorized by the Engineer.

3.1.9 Restrike piles which have settled or heaved during driving of adjacent piles. No additional compensation will be made for piles restruck due to such settlement or heave.

3.1.10 Restrike piles as directed by the Engineer.

3.1.11 Remove loose and displaced material from around piles after completion of driving and leave clean, solid surfaces to receive new pile cap concrete.

3.1.12 Provide sufficient length above cut-off elevation so that portion of the pile that is damaged during driving is cut off. Cut off piles neatly and squarely at elevations indicated.

3.1.13 Remove cut-off lengths from site subsequent to the completion of work.

3.1.14 Remove all old pile cushions and subsequently emplace a new pile cushion into the helmet before starting to drive another pile and whenever during the driving there is a indication that the pile cushion has been excessively compressed, heated, or damaged.

3.1.15 Keep the pile driving helmet concentric and square with the pile head at all times and the leads in alignment with the pile during driving activities. Occasionally during driving activities, and whenever requested by the Engineer lift off (lighten) the helmet from the pile to verify that the helmet and leads are not inducing bending stresses in the pile.

3.1.16 Do not prepare and pour pile caps before approval has been given by the Engineer.

3.1.17 All adjacent existing structures shall be monitored before, during, and after pile installation for damage caused by pile installation. Repair of all damage is the responsibility of the Contractor.

3.2 EQUIPMENT INFORMATION

3.2.1 Prior to commencement of pile installation operation, submit to the Engineer for approval the details of equipment for installation of piles.

3.2.2 For impact hammers, give manufacturer's name, type, maximum rated energy and rated energy per blow at normal working rate during easy and at termination driving, mass of striking parts of hammer, mass of driving cap, and type and elastic properties of hammer cushion.

3.2.3 IMPACT HAMMER

3.2.3.1 For final driving of steel piles, provide a hammer capable of delivering to the pile a non-erratic impact load not smaller than one-half of the design axial load of the pile to the pile head at a normal working rate.

3.2.3.2 Remedial action due to failure of the Contractor's hammer equipment will be at the Contractor's own expense. Such remedial action may consist of, but need not be limited to, adjustment or replacement of hammer cushion, or of pile cushion, or to adjustment or replacement of hammer.

3.3 LEADS

3.3.1 Provide leads that will enable the hammer to deliver impacts concentrically and in alignment with the pile longitudinal axis without inducing rocking movements or bending moments in pile.

3.3.2 Performance of leads will be subject to assessment of the Engineer. Any remedial action required will be at the Contractor's own expense.

3.4 PREPARATION

3.4.1 Ensure that ground conditions at the pile locations are adequate to support pile driving and loading-test operations (if applicable). Make provision for access and support of piling equipment during performance of work.

3.4.2 Do not commence pile driving before the pile cap excavation has been completed.

3.5 FIELD MEASUREMENTS

Field measurements shall include (at a minimum):

3.5.1 Maintain accurate and daily records of driving for each pile, in addition to cushion and follower characteristics.

3.5.2 Type, make, and rated energy of hammer.

3.5.3 Other installation equipment including details on use of pile cushion and leads.

3.5.4 Pile size and length, location of pile in pile group, and location or designation of pile group.

3.5.5 Time for start and finish of driving pile and sequence of pile driving for pile group.

3.5.6 Penetration for pile self-weight and weight of hammer, number of blows per one (1) foot of penetration from start of driving, and penetration per one (1) foot when approaching termination driving of pile.

3.5.7 Observed stroke and blow rate (blows/minutes) of hammer.

3.5.8 Tip elevation upon termination of driving pile, and final tie and cut-off elevations upon completion of the given pile group.

3.5.9 Record of restriking.

3.5.10 Other pertinent information, such as interruption of continuous driving, observed pile damage, etc.

3.5.11 Records of the elevation of adjacent piles before and after driving of pile.

3.5.12 Record all information on forms provided by the Engineer.

3.5.13 Provide the Engineer with three copies of the field records.

3.6 OBSTRUCTIONS

3.6.1 Where obstructions are encountered that results in sudden, unexpected change in penetration resistance and deviation from specified tolerances, the Contractor may be required to perform one or all of the following:

3.6.1.1 Remove the obstruction from the driving path.

3.6.1.2 Extraction, repositioning, and redriving of the pile.

3.6.1.3 Addition of extra piles to the group.

3.6.2 If, in the opinion of the Engineer, work done as per Clause 3.6.1 could not have been reasonably anticipated by the Contractor, additional compensation for work done will be considered for payment.

3.7 DESIGN LOAD

3.7.1 The required design load is presented on the Design Drawings and should be verified in the field by a pile driving formula, or other acceptable means.

3.8 PENETRATION RESISTANCE

3.8.1 Installation of each pile will be subject to approval of the Engineer, who will be sole judge of acceptability of pile with respect to penetration resistance at end-of-initial-driving as well as at restriking, to depth of penetration, or to other penetration criteria. The Engineer will approve the final penetration resistance of all piles prior to removal of pile driving equipment from site.

3.8.2 Prior to taking final penetration resistance, drive piles without interruption for a sufficient interval to break or prevent development of soil "set-up".

3.8.3 Drive each pile to the required tip elevation.

3.8.4 When required by the Engineer, restrike piles to the same criterion as applied in initial driving (Clause 3.8.1 of this text). No additional compensation will be made for restriking.

3.9 TOLERANCES

3.9.1 Pile heads at cut-off elevation to be within 2 inches of locations indicated as measured immediately after termination of initial driving, and 4 inches as measured after all piles have been driven. To achieve pile installation within tolerances specified, the Contractor may have to resort to using temporary bracing and templates.

3.9.2 Pile rotation to be limited to 2 degrees.

3.9.3 Maintain piling within tolerances specified throughout execution work.

3.9.4 If, in the opinion of the Engineer piles are placed beyond tolerances specified, the Contractor may be required to remove such piles and install new piles to the specified tolerances at his own expense.

3.10 DAMAGED OR DEFECTIVE PILES

3.10.1 The Engineer will reject any pile found to be defective or damaged.

3.10.2 Remove the rejected pile and replace with a new and, if necessary, longer pile.

3.10.3 No extra compensation will be made for removing and replacing or other work made necessary through rejection of a defective pile

IV – PILE CAPS

1.0 The dimension of the pile caps shall be 30" wide.

2.0 The concrete and steel in the pile caps shall meet the requirements of Section VI of these specifications.

3.0 The piles shall be embedded into the pile caps a minimum of 2'-0".

4.0 The pile caps shall be reinforced as shown on the construction drawings.

V – BACKFILL

1.0 The backfill to a distance of 6' behind the abutment shall consist of select granular backfill conforming to AASHTO A1a material.

2.0 The backfill for the abutment shall be placed in 8" loose lifts and be compacted to a dry unit weight equal to at least 95% of the maximum dry unit weight as addressed by the modified Proctor test.

3.0 Care must be exercised to ensure that heavy equipment is not operated adjacent to the abutment. Heavy equipment shall not be allowed any closer than 3 feet to the abutment walls.

VI – CONCRETE

1.0 CODES AND STANDARDS

1.1 Reinforced concrete shall conform to the requirements of AASHTO Standard Specifications for Highway Bridges, Division II - Construction, Section 8, "Concrete Structures", for Class A concrete and Section 702 of Indiana DOT Standard Specifications with a minimum compressive strength of 4,000 psi.

2.0 STANDARDS FOR MATERIALS

2.1 Portland Cement - Conforming to ASTM Specification C-150, Type I or II.

2.2 Water - The water shall be drinkable, clean free from injurious amounts of oils, acids, alkalis, organic materials, or deleterious substances.

2.3 Aggregates - Fine and coarse aggregates shall conform to current ASTM Specification C-33 "Specification for Concrete Aggregates" except that local aggregates which have been shown by tests and by actual service to produce satisfactory qualities may be used when approved by the Engineer.

2.4 Submittals - Test data and/or certifications to the Owner shall be furnished upon request.

3.0 PROPORTIONING OF CONCRETE

3.1 COMPOSITION

3.1.1 The concrete shall be composed of cement, fine aggregate, coarse aggregate and water.

3.1.2 The concrete shall be homogeneous, readily placeable and uniformly workable and shall be proportioned in accordance with ACI- 211.1.

3.1.3 Proportions shall be established on the basis of field experience with the materials to be employed. The mount of water used shall not exceed the maximum 0.49 water/cement ratio, and shall be reduced as necessary to produce concrete of the specified consistency at the time of placement.

3.1.4 An air-entraining admixture, conforming to the requirements of ASTM C260, shall be used in all concrete furnished under this contract. The quantity of admixture shall be such as to produce an air content in the freshly mixed concrete of 6 percent plus or minus 1 percent as determined in accordance with ASTM C231 or C173.

3.2 Qualities Required - As indicated in the table below:

TABLE VI-1

QUALITIES REQUIRED

ITEM	QUALITY REQUIRED
Class	A
Type of Cement	I or II
Compressive Strength f'c @ 28 days	4,000 psi
Slump, inches	2 - 4 in.

3.3 Maximum Size of Coarse Aggregates - Maximum size of coarse aggregates shall not be larger than 38 mm (1 ½ inches).

3.4 Rate of Hardening of Concrete - Concrete mix shall be adjusted to produce the required rate of hardening for varied climatic conditions:

Under 40°F Ambient Temperature - Accelerate calcium chloride at 2% is acceptable when used within the recommendations of ACI-306R "Cold Weather Concreting." Admixtures containing chloride ion in excess of 1% by weight of admixture shall not be used in reinforced concrete.

4.0 MIXING AND PLACING

4.1 Equipment - Ready Mix Concrete shall be used and shall conform to the "Specifications for Ready-Mix Concrete," ASTM C-94. Approval is required prior to using job mixed concrete.

4.2 Preparation - All work shall be in accordance with ACI-304, "Recommended Practice for Measuring, Mixing, Transporting and Placing Concrete." All construction debris and extraneous matter shall be removed from within the forms. Concrete shall be placed on clean surfaces, free from water. Concrete that has to be dropped four (4) feet or more shall be placed through a tremie.

4.3 All concrete shall be consolidated by internal mechanical vibration immediately after placement. Vibrators shall be of a size appropriate for the work, capable of transmitting vibration to concrete at frequencies of not less than 4,500 impulses per minute.

5.0 FORM WORK

5.1 Forms shall be of wood, steel or other approved material and shall be set and held true to the dimensions, lines and grades of the structure prior to and during the placement of concrete.

5.2 Forms shall not be removed until the concrete has sufficient strength to prevent concrete drainage.

6.0 CURING

6.1 Fresh concrete shall be protected from rains, flowing water and mechanical injury for a period of four (4) days.

7.0 REINFORCING STEEL

7.1 MATERIAL

7.1.1 All reinforcing bars shall be deformed bars (ASTM-A615) Grade 60 and shall conform to Indiana DOT Standard Specifications Section 910.01.

7.2 BENDING AND SPLICING

7.2.1 Bar reinforcement shall be cut and bent to the shapes shown on the plans. Fabrication tolerances shall be in accordance with ACI 315. All bars shall be bent cold, unless otherwise permitted.

7.2.2 All reinforcement shall be furnished in the full lengths indicated on the plans unless otherwise permitted. Except for splices shown on the plans and splices for No. 5 or smaller bars, splicing of bars will not be permitted without written approval. Splices shall be staggered as far as possible.

7.2.3 In lapped splices, the bars shall be placed and wired in such a manner as to maintain the minimum distance to the surface of the concrete shown on the plans.

7.2.4 Substitution of different size bars will be permitted only when authorized by the engineer. The substituted bars shall have an area equivalent to the design area, or larger.

7.3 PLACING AND FASTENING

7.3.1 Steel reinforcement shall be accurately placed as shown on the plans and firmly held in position during the placing and setting of concrete. Bars shall be tied at all intersections around the perimeter of each mat and at not less than 2 foot centers or at every intersection, whichever is greater, elsewhere. Welding of cross bars (tack welding) will not be permitted for assembly of reinforcement.

7.3.2 Reinforcing steel shall be supported in its proper position by use of mortar blocks, wire bar supports, supplementary bars or other approved devices. Such devices shall be of such height and placed at sufficiently frequent intervals so as to maintain the distance between the reinforcing and the formed surface or the top surface within 1/4 inch of that indicated on the plans.

VII – FILTER FABRIC

1.0 Geotextile (filter fabric) shall be placed over the #57 drainage stone at all weepholes. The filter fabric shall be placed between weepholes, #57 drainage stone and the granular backfill material. Filter fabric shall be placed at all locations shown on the construction drawings.

2.0 Filter fabric cloth shall conform to Contech specification for C60-NW or equivalent and shall meet the following ASTM tests:

2.1 ASTM D4751 - Apparent opening size equal to #70 U.S. Standard Sieve Size.

2.2 ASTM D4632 (Grab Tensile Test) - Minimum Strength = 160 pounds.

2.3 ASTM D4632 (Grab Elongation) - 30-70%.

2.4 ASTM D4533 (Trapezoidal Tear) - Minimum Strength = 60 pounds.

2.5 ASTM D4355 (Stabilized for Heat and Ultra-Violet Degradation) - 70% strength retained.

3.0 The minimum fabric coefficient of permeability (ASTM D4491) shall be 0.24 cm/sec.

4.0 The fabric shall be non-woven with a minimum thickness (ASTM D5199) of 60 mils.

5.0 Fabric shall not be placed over sharp or angular rocks that could tear or puncture it.

6.0 Care should be exercised to prevent any puncturing or rupture of the filter fabric. Should such rupture occur the damaged area should be covered with a patch of filter fabric using an overlap minimum of one (1) foot.

DAVID C. COX REGISTERED No. 1295 STATE OF INDIANA PROFESSIONAL ENGINEER

INFORMATION ONLY

CBC ENGINEERS
DAYTON, OHIO

SPECIFICATIONS

Drawn By: BMW	Date: 2/18/10	CONTECH CONSTRUCTION PRODUCTS, INC. DESIGN OF ABUTMENTS ON DRIVEN PILE FOUNDATIONS FOR **PEDESTRIAN BRIDGE #4** CASCADES TRAIL BLOOMINGTON, INDIANA
Approved By:	Date:	

Scale	Project No.	Rev.	Sheet
GRAPHIC	CBC-12058-4	-	4 OF 4

SECTION XIII

PERMIT INFORMATION

DEPARTMENT OF THE ARMY
U.S. ARMY ENGINEER DISTRICT, LOUISVILLE
CORPS OF ENGINEERS
INDIANAPOLIS REGULATORY OFFICE
9799 BILLINGS ROAD
INDIANAPOLIS, INDIANA 46216-1055
FAX (317) 532-4228
http://www.lrl.usace.army.mil/

August 15, 2011

Operations Division
Regulatory Branch (North)
ID No. LRL-2011-646-dlz

Mr. David Williams
Bloomington Parks and Recreation
401 North Morton Street, Suite 200
Bloomington, IN 47402-3729

Dear Mr. Williams:

This is in regard to the letter of August 2, 2011, from Eagle Ridge Civil Engineering Services concerning the proposed construction of a pedestrian bridge over the Griffy Creek near Cascades Road as part of Phase I of a pedestrian trail project. In addition, the trail will require the extension of an existing 8 feet wide by 4 feet high box culvert at an unnamed tributary of Cascade Creek by 25 feet with 10 feet of riprap placed for energy dissipation and erosion control. The project is located in Section 21, Township 9 North, Range 1 West, Bloomington, Monroe County, Indiana. We have reviewed the submitted data relative to Section 404 of the Clean Water Act (CWA).

The Louisville, Detroit, and Chicago Districts issued Regional General Permit (RGP) No. 1 pursuant to Section 10 of the Rivers and Harbors Act of 1899 and Section 404 CWA on December 15, 2009, for certain activities having minimal impact in Indiana. Since less than 0.10 acre of "waters of the United States" would be impacted by the discharge of dredged or fill material, and the work is considered to have minimal impact on the aquatic environment, your project is authorized under the provisions of the RGP. Compliance with the enclosed RGP General Conditions and the Section 401 Water Quality Certification issued by the Indiana Department of Environmental Management (IDEM) dated December 11, 2009, is required. You must provide the IDEM notification of this activity.

Upon completion of the work authorized by this RGP, the enclosed Compliance Certification form must be completed and returned to this office. This authorization is valid until December 15, 2014.

If you have any questions concerning this matter, please contact me by writing to the above address or by calling 317-532-4198. Any correspondence should reference our assigned Identification Number LRL-2011-646-dlz.

Sincerely,

Daniel L. Zay
Project Manager
Indianapolis Regulatory Office

Enclosures
Copy Furnished: IDEM (Sanders)
Eagle Ridge Civil Engineering (Tanis)

RULE 5 - NOTICE OF INTENT (NOI)

State Form 47487 (R5 / 10-05)
Indiana Department of Environmental Management
Office of Water Quality
Approved by State Board of Accounts, 2005

Type of Submittal (Check Appropriate Box):
☒ Initial ☐ Amendment ☐ Renewal

Permit Number:

(Note: The initial submittal does not require a permit number; the Department will assign a number. A permit number is required when filing an amendment, applying for renewal, or correspondence related to this permit).

Note: Submission of this Notice of Intent letter constitutes notice that the project site owner is applying for coverage under the National Pollutant Discharge Elimination System (NPDES) General Permit Rule for Storm Water Discharges Associated with Construction Activity. Permitted project site owners are required to comply with all terms and conditions of the General Permit Rule 327 IAC 15-5 (Rule 5).

Project Name and Location

Project Name: Cascades Trail Phase I: North Branch Clubhouse to Stone Mill Road

County: Monroe

Brief Description of Project Location:
Clubhouse of Cascades Park to Stone Mill Road along Old SR 37 in the City of Bloomington, Monroe County, Indiana.

Project Location: *Describe location in Latitude and Longitude (Degrees, Minutes, and Seconds or Decimal representation) and by legal description (Section, Township, and Range, Civil Township)*

Latitude: 39-11'-54"N

Longitude: 86-32'-13"W

Quarter: Section: 16,20, & 21 Township: 8N Range: 1W Civil Township: Bloomington

Does ☒ all or ☐ part of this project lie within the jurisdictional boundaries of a Municipal Separate Storm Sewer System (MS4) as defined in 327 IAC 15-13?
☒ Yes ☐ No If yes, name the MS4(s):
City of Bloomington

Project Site Owner and Project Contact Information

Company Name *(If Applicable)*:
City of Bloomington

Project Site Owner's Name: *(An Individual)*
David Williams

Title/Position:
Operations Director, Parks Dept.

Address:
401 North Morton Street, Suite 250

City: Bloomington

State: IN

ZIP Code: 47402

Phone: 812.349.3706

FAX: 812.349.3705

E-Mail Address: *(If Available)*
williamd@city.bloomington.in.us

Ownership Status *(check one)*:
Governmental Agency: ☐ Federal ☐ State ☒ Local Non-Governmental: ☐ Public ☐ Private ☐ Other: *(Explain)*

Contact Person:
Brock Ridgway, P.E.

Company Name: *(If Applicable)*
Eagle Ridge Civil Engineering Services, LLC

Affiliation to Project Site Owner:
Engineering Consultant

Address: *(if different from above)*
1321 Laurel Oak Drive

City: Avon

State: IN

ZIP Code: 46123

Phone: 317.370.9672

FAX: 317.272.7369

E-Mail Address: *(If Available)*
bridgway@eagleridgecivil.com

Project Information

Project Description:
☐ Residential-Single Family ☐ Residential-Multi-Family ☐ Commercial ☐ Industrial ☒ Other: *(Explain)* Public Improvement

Name of Receiving Water: Griffy Creek

(Note: If applicable, name of municipal operator of storm sewer and the ultimate receiving water. If a retention pond is present on the property, the name of the nearest possible receiving water receiving discharge must be provided).

Project Acreage

Total Acreage: 2.26 Proposed Land Disturbance: *(in acres)* 2.26

Total Impervious Surface Area: *(in square feet, estimated for completed project)* 52,450

Project Duration

Estimated Start Date: 09/20/11 Estimated End Date for all Land Disturbing Activity: 12/31/14

(Continued on Reverse Side)

Construction Plan Certification

By signing this Notice of Intent letter, I certify the following:

A. The storm water quality measures included in the Construction Plan comply with the requirements of 327 IAC 15-5-6.5, 327 IAC 15-5-7, and 327 IAC 15-5-7.5;
B. the storm water pollution prevention plan complies with all applicable federal, state, and local storm water requirements;
C. the measures required under 327 IAC 15-5-7 and 327 IAC 15-5-7.5 will be implemented in accordance with the storm water pollution prevention plan;
D. if the projected land disturbance is One (1) acre or more, the applicable Soil and Water Conservation District or other entity designated by the Department, has been sent a copy of the Construction Plan for review;
E. storm water quality measures beyond those specified in the storm water pollution prevention plan will be implemented during the life of the permit if necessary to comply with 327 IAC 15-5-7; and
F. implementation of storm water quality measures will be inspected by trained individuals.

In addition to this form, I have enclosed the following required information:

☒ Verification by the reviewing agency of acceptance of the Construction Plan.

☒ Proof of publication in a newspaper of general circulation in the affected area that notified the public that a construction activity is to commence, including all required elements contained in 327 IAC 15-5-5 (9). The Proof of Publication **Must** include company name and address, project name, address/location of the project, and the receiving stream to which storm water will be discharged. Following is a sample Proof of Publication:

"XERT Development Inc. (10 Willow Lane, Indianapolis, Indiana 46206) is submitting a Notice of Intent to the Indiana Department of Environmental Management of our intent to comply with the requirements of 327 IAC 15-5 to discharge storm water from construction activities associated with Water Garden Estates located at 24 Washout Lane, Indianapolis, Indiana 46206. Runoff from the project site will discharge to the White River. Questions or comments regarding this project should be directed to Walter Water of XERT Development Inc."

☒ $100 check or money order payable to the Indiana Department of Environmental Management. A permit fee is required for all NOI submittals (initial and renewal). A fee is not required for amendments.

Project Site Owner Responsibility Statement

By signing this Notice of Intent letter, I certify under penalty of law that this document and all attachments were prepared under my direction or supervision in accordance with a system designed to assure that qualified personnel properly gather and evaluate the information submitted. Based on my inquiry of the person or persons who manage the system, or those persons directly responsible for gathering the information, the information submitted is, to the best of my knowledge and belief, true, accurate, and complete. I am aware that there are significant penalties for submitting false information or violating the provisions of 327 IAC 15-5, including the possibility of fine and imprisonment for knowing violations.

Printed Name of Project Owner: _____

Signature of Project Owner: David Williams _____ Date: _____

This Notice of Intent must be signed by an individual meeting the signatory requirements in 327 IAC 15-4-3(g).
All NOI submittals must include an original signature (FAX and photo copies are not acceptable).

Note: Within 48 hours of the initiation of construction activity, the project site owner must notify the appropriate plan review agency and IDEM, Office of Water Quality of the actual project start date if it varies from the date provided above.

Note: A permit issued under 327 IAC 15-5 is granted by the commissioner for a period of five (5) years from the date coverage commences. Once the five (5) year permit term duration is reached, a general permit issued under this rule will be considered expired, and as necessary for construction activity continuation, a new Notice of Intent letter (Renewal) is required to be submitted ninety (90) days prior to the termination of coverage. The submittal must include the NOI Letter, Proof of Publication, Fee, and verification that the plan for the project was approved (original verification of plan approval is acceptable provided the scope of the project has not changed from the original submittal).

Mail this form to: **Indiana Department of Environmental Management**
Cashiers Office - Mail Code 50-10C
100 North Senate Avenue
Indianapolis., IN 46204-2251

327 IAC 15-5-6 (a) also requires a copy of the completed Notice of Intent letter be submitted to the local Soil and Water Conservation District or other entity designated by the Department, where the land disturbing activity is to occur.

Questions regarding the development or implementation of the Construction Plan/Storm Water Pollution Prevention Plan should be directed to the local county Soil and Water Conservation District (SWCD). If you are unable to reach the SWCD or have other questions please direct those inquiries to the IDEM Rule 5 Coordinator at 317/233-1864 or 800/451-6027 ext.3-1864.
For information and forms visit: http://www.in.gov/idem/water/npdes/permits/wetwthr/storm/rule5.html

Construction/Stormwater Pollution Prevention Plan
Technical Review and Comment *(Form 1)*

Project Information

Project Name: Cascades Trail Phase 1 - North Branch Clubhouse to Stone Mill Rd **County:** Monroe
Plan Submittal Date: 08/30/11 **Hydrologic Unit Code:** 5120202010070
Project Location Description: A walking trail adjacent to Cascade Creek crossing over Griffy Creek
Latitude and Longitude: 39^ 11' 53" N / 86^ 32' 14" W
Civil Township: Vanburen **Quarter:** SW **Section:** 16,20,21 **Township:** 8N **Range:** 1W

Project Owner Name: City of Bloomington Board of Public Works
Contact:
Address:
City: **State:** **Zip:**
Phone: **FAX:** **E-Mail:**

Plan Preparer Name: Michael Tanis, PE
Affiliation: Eagle Ridge CE
Address:
City: **State:** **Zip:**
Phone: 317-439-8144 **FAX:** **E-Mail:** mtanis@eagleridgecivil.com

Plan Review

Review Date: 08/30/11
Principal Plan Reviewer: Daniel/Martha Miller
Agency: Monroe Co SWCD
Address: 1931 S Liberty Drive
City: Bloomington **State:** IN **Zip:** 47403
Phone: 812-349-2046 **FAX:** **E-Mail:** martha.miller@in.nacdnet.net
Assisted By:

☑ **PLAN IS ADEQUATE: A comprehensive plan review has been completed and it has been determined that the plan satisfies the minimum requirements and intent of 327 IAC 15-5.**

☐ **Please refer to additional information included on the following page(s).**

☐ **Submit Notice of Intent (NOI):** *Attach a copy of this cover page when submitting the NOI to the Indiana Department of Environmental Management. Construction activities may begin 48 hours following the submittal of the NOI. A copy of the NOI must also be sent to the Reviewing Authority (e.g. SWCD, DNR).*

☐ **A preliminary plan review has been completed; a comprehensive review will not be completed within the 28-day review period. The reviewing authority reserves the right to perform a comprehensive review at a later date and revisions to the plan may be required at that time to address deficiencies.**

☐ **Please refer to additional information included on the following page(s).**

☑ **Submit Notice of Intent (NOI):** *Attach a copy of this cover page when submitting the NOI to the Indiana Department of Environmental Management. Construction activities may begin 48 hours following the submittal of the NOI. A copy of the NOI must also be sent to the Reviewing Authority (e.g. SWCD, DNR).*

☐ **PLAN IS DEFICIENT: Significant deficiencies were identified during the plan review.**

☐ **Please refer to additional information included on the following page(s).**

☐ **DO NOT file a Notice of Intent for this project.**

☐ **DO NOT commence land disturbing activities until all deficiencies are adequately addressed, the plan re-submitted, and notification has been received that the minimum requirements have been satisfied.**

☐ **Plan Revisions** ☐ **Deficient Items should be mailed or delivered to the Principal Plan Reviewer identified in the Plan Review Section above.**

SECTION XIV

TRAFFIC SIGNALS AND TRAFFIC SIGNAL MATERIALS
(INDOT Recurring Special Provisions 805-T-169 and 922-T-168)

805-T-169 TRAFFIC SIGNALS

(Revised 05-23-11)

The Standard Specifications are revised as follows:

SECTION 805, BEGIN LINE 1, DELETE AND INSERT AS FOLLOWS:

SECTION 805 – TRAFFIC SIGNALS

805.01 Description

This work shall consist of furnishing miscellaneous materials, not furnished by the Department, and installing traffic signals in accordance with these specifications and in reasonably close conformance with the lines, grades, and locations shown on the plans or as directed.

MATERIALS

805.02 Materials

Materials shall be in accordance with the following:

Castings for Handhole.....910.05(b)
Coarse Aggregate, Class E or Higher, Size No. 8.....904
Concrete, Class A, B, or C 702
Loop Detector Sealant.....906.02(a)
Reinforced Concrete Pipe 907.02
Traffic Signal Materials and Equipment.....922
Treated Lumber.....911.02

The proposed work shall be examined in order to determine what materials not furnished by the Department are required to complete the contract. The Department will furnish only the materials specified on the Department Furnished Materials special provision. If materials to be furnished by the Contractor are listed, the list is only a guide for estimating purposes. All additional materials required to complete an operating installation as specified shall be furnished.

Signal handholes shall be class III reinforced concrete pipe as shown on the plans.

Joint sealant material shall be compatible with the roadway materials. If polyethylene duct loop wire is used, only sealant in accordance with 906.02(a)1 shall be used.

Preformed pave-over loops shall be designed for use with HMA, SMA or PCCP as applicable.

Wood poles to be furnished shall be in accordance with the current ANSI specifications and dimensions. They shall be of the length and class specified, be fully treated in accordance with 922.05(b), and dry. Minimum circumference at the top and at a point 6 ft (1.8 m) from the butt shall be in accordance with ANSI specifications.

Steel strain poles greater than 24 ft (7.3 m) in length shall be in accordance with 922.05(a).

The battery cabinet and program timing module for solar powered flashing beacons shall be from the Department's Approved List of Traffic Signal Control Equipment.

CONSTRUCTION REQUIREMENTS

805.03 General Requirements

The Contractor shall maintain existing traffic signals in operation until the Engineer determines that the progress of the work necessitates their removal. The new installation shall not interfere with the operation of the existing signal. The work shall proceed in such a manner that the signals are not out of service at any 2 adjacent intersections at any time. When the operation of an existing traffic signal must be interrupted before the new signal is placed in operation, the traffic shall be controlled at all times. The work shall be scheduled so that the interruption is limited to a minimum amount of time and at off peak hours. When a new span, catenary, and tether are to be installed on an existing structure, the work shall be done so as not to damage the structure. ~~Tether cable will not be required on a flasher installation.~~ If an existing structure is damaged, it shall be repaired or replaced as directed with no additional payment. The new span and catenary installation shall not interfere with the operation of the existing traffic signal. Traffic shall be controlled at all times during the changeover when the existing traffic signal is turned off and the new signal is turned on. This changeover shall take place such that the interruption is limited to a minimum amount of time.

When directed, temporary stop signs shall be erected at the intersection. When no work is in progress, the intersection shall have at least 2 operating signal faces for each approach. When the new installations are completed, all existing signal equipment and materials including wood poles, steel poles, and cast-iron handhole rings and covers which have not been used in the new installation shall be carefully removed. Regardless of the right to materials found on the project, as set out in other sections of these specifications, items designated in the contract documents, and field identified by the Department, as traffic signal equipment to be salvaged by the Department or local unit of government shall be stored at a secure site until such time as it is transported to the ~~District Office~~*designated location*, when designated as a pay item, or salvaged by the Department or local unit of government. The Contractor shall verify that the field identification placed by the Department has not been removed by vandalism or natural causes. If the Contractor has reason to believe field identifications have been removed, it shall contact the Department. The Contractor shall be responsible for all damage or loss of this equipment and shall repair or replace the damaged or lost equipment as directed. All signal equipment removed and not designated to be salvaged shall become the property of the Contractor and shall be disposed of in accordance with 202.

All existing painted signal equipment to be reused, such as pedestals, bases, controller cabinets, signal heads, signal weatherheads, pipe arms, shall be cleaned and

painted with two coats of highway yellow enamel. Aluminum poles and mast arms shall not be painted.

Existing concrete foundations, which have not been used in the new installation, shall be removed to a minimum of 4 in. (100 mm) below the adjacent grade. The openings shall be filled with concrete and the surface finished and broomed, if they are located in sidewalk areas. Otherwise, they shall be filled with acceptable material conforming with the surrounding area. Existing signal handholes to be removed, shall be filled after removing rings and covers, with B borrow with a minimum of 4 in. (100 mm) of concrete on top to bring it up to grade in a sidewalk area. Surfaces shall be finished and broomed. Otherwise, they shall be filled with acceptable material conforming with the surrounding area.

The signal controller timings will be provided and the Engineer shall be present when the signal intersection is to be placed in operation.

All electrical wiring terminations and splices; controller and cabinet set-up; and testing, review, and turn-on of all operational apparatus at each location shall be done by or in the presence of and under the responsible charge of an employee of the Contractor who holds a Traffic Signal Construction Technician Level II certification which has been granted by the International Municipal Signal Association. Installation inspections, troubleshooting, maintenance and repair of these systems shall be accomplished by or in the presence of and under the responsible charge of an employee of the Contractor who holds a Traffic Signal Construction Technician Level II certification or a Traffic Signal Field Technician Level II certification which has been granted by the International Municipal Signal Association. Supervision of non-electrical, traffic signal related construction work and traffic control shall be done by a person holding, at a minimum, a Work Zone Traffic Safety Specialist certification which has been granted by the International Municipal Signal Association, or an equivalent certification approved by the Department.

Before starting work, the Contractor shall provide the names of the Level II Traffic Signal Construction Technicians, the Level II Traffic Signal Field Technicians and Work Zone Traffic Safety Specialists who have been assigned to perform signal related work, and a photocopy of each such person's certification card. If the Level II Traffic Signal Construction or Field Technicians or Work Zone Traffic Safety Specialists are dismissed from the work, all signal related work requiring such certified personnel on the project site shall cease until the names and photocopies of certification cards for replacement personnel are provided to the Engineer.

Electrical work shall be executed in accordance with the requirements of the National Board of Fire Underwriters, the State Fire Marshal, and the power company which will furnish the electric service. The work shall be in accordance with any local regulations that may apply. The Department will arrange and provide for power service which the power company will bring to the point designated on the plans. Prior to the start of construction, the schedule of activities shall be coordinated with the power company and they shall be contacted again at least 14 days prior to the time the service work is to be completed.

The Department will obtain permits from local officials, companies, or individuals for the use of poles, right-of-way, or other property incidental to the installation of traffic signal. Although entering into the contract implies permission and authority to cut into and push under pavement, sidewalks, and alleys, any damage to underground utilities or interruption of such service shall be the responsibility of the Contractor. The Contractor shall be in accordance with local regulations as well as 107.08. Protective devices shall be in accordance with 107.12 and 801.

The location of signal heads, controllers, signal poles, signal cantilever structures, detector housing, disconnect hangers, and other installation items will be shown on the plans. However, a change in the location of an item may be ordered during the progress of the work. The work shall be completed as shown on the plans except for those changes specifically authorized in writing.

Flashing beacons shall flash at a rate for each beacon of 50 to 60 times per minute with the illuminated period from 1/2 to 2/3 of the total cycle. If a second beacon is specified, the 2 beacons shall flash alternately.

805.04 Pole Installation

Working drawings for strain poles or cantilever structures shall be provided in accordance with 105.02. Metal poles shall be erected on concrete foundations and shall be reasonably plumb after installation of signal heads. The handhole side of the pole shall be at right angles to the direction of the mast arm or span, catenary, and tether. Signal cables shall be brought up inside the poles. Any steel pole, mast arm, or hardware not galvanized or painted with baked enamel shall be painted with 2 coats of rust inhibiting aluminum paint. Paint shall be applied in accordance with 619 with the exception that commercial blast cleaning of the steel will not be required. All rust, scale, and dirt shall be cleaned from the metal surface so that paint adheres to the surface.

The construction of concrete foundations shall be in accordance with 805.13. Wood poles shall be set a minimum of 7 ft (2.1 m) in the ground and raked 12 in. (300 mm).

805.05 Placing Signal Heads

Mast arm and span mounted signal heads shall have 17 ft (5.2 m) minimum and 19 ft (5.8 m) maximum clearance over the roadway unless there are visual obstructions which require lowering the signal head. A signal head over the roadway shall not have a clearance of less than 15 ft (4.6 m). Such signal heads shall be located over the intersection as shown on the plans. Such signal heads shall have a uniform clearance, which will be determined. Signal heads not mounted over a paved roadway, on the top or side of a pole, shall not be less than 10 ft (3 m) nor more than 15 ft (4.6 m) above the sidewalk or, if none, above the pavement grade at the center of the roadway. Signal faces shall be directed to the proper approach lane in each direction. *Flasher signal faces that supplement signs shall be mounted with the bottom of the housing at not less than 3 ft (0.9 m) nor more than 13 ft (3.9 m) above the edge of pavement. Flasher signal faces that supplement signs shall be directed towards oncoming traffic.* Pedestrian signal faces shall be mounted with the bottom of the housing at not less than 7 ft (2.1 m) nor more than 10

ft (3 m) above the sidewalk. The pedestrian signal shall be in line with the pedestrian's vision at the appropriate crosswalk being used. Pedestrian push-buttons shall be mounted at a height of 3 1/2 to 4 ft (1.1 to 1.2 m) above the sidewalk as shown on the plans. A pedestrian actuated signal sign shall be mounted immediately above the push-button.

Signal heads shall be assembled and wired with 1 conductor, THW, stranded wire. Where splices are made, a 2 ft (0.6 m) minimum length of cable or wire in excess of that required for a continuous run shall be provided. Splices shall be twisted together and soldered or approved type connectors used. Each splice shall be completely insulated by wrapping with an approved tape and sealed with an approved electrical coating material. Splices shall be made in such manner that the connections are moisture proof. The cables coming out of the signal weatherhead shall be looped to form a drip loop. The drip loop shall be made so that the cables coming out of the weatherhead loop down below the elevation of the weatherhead to prevent water from following the cable into the weatherhead. If used, the splice indicated above shall be located in the top of the coils of cable forming the drip loop.

Signal heads shall not be installed until all other work has been completed. If it becomes necessary to mount signal heads for more than 2 h be fore the lights are to be turned on, the signal heads shall be hooded by placing sacks or similar cover over them so as to conceal them from traffic. Hooded signal heads are not permitted to be in place for more than 5 days. No signal head shall be left over night with the lights out unless it is hooded. Signal heads shall be securely mounted. The polycarbonate signal face shall be used only when securely supported on bot h ends of the assembly. In a span cable installation, a tether cable would satisfy this requirement.

805.06 Grounding

All signal supports, signal controller supports, and entrance switches shall be grounded in accordance with the applicable requirements of 807.12.

805.07 Wire and Cable Installations

All cable runs attached to utility poles shall have code clearance relative to utility cables. They shall be no less than 18 f t (5.5 m) above the ground level except over railroad tracks when a minimum of 27 ft (8.2 m) clearance shall be maintained. All cable runs shall be installed in continuous lengths without splices between terminals except when necessary at handholes, junction boxes, pole signal bases, and pedestal bases. The type of cable and the number of conductors as well as the gage shall be as shown on plans unless otherwise specified.

Cable rings shall be used to support the signal cable on t he signal span cable. They shall be spaced 12 in. (300 mm) on center. Cable shall be pulled through the conduit to the terminal panel in the controller cabinet. Caution shall be used to prevent damage to the cable when it is being pulled through conduit.

Coded cable conductors shall be used throughout the installation. Cable conductors shall be tagged at all detector housings, handholes, ~~pole~~ signal *pole* bases, and controller cabinets. *At the ends of each cable, the tag shall be placed between 4 in. (100 mm) and 8 in. (200 mm) from the end of the wire and on the outer jacket. At all*

other locations, the tag shall be placed in the middle of the length of cable stored at the location. The tag shall be one-half inch wide, thermal printed black on yellow or black on white, polyester or nylon tape with permanent adhesive and shall be water, chemical and scratch resistant. The font shall be arial, size 10. Tags shall be installed flag style around the cable with the backs of the tag ends placed together. Tags ~~shall consist of an aluminum blank of sufficient size to be stamped with not less than 3/16 in. (5 mm) high all upper case letters which~~ *shall* identify the cables by their use ~~and phase~~. The following are the uses which shall be indicated by the tags:

(a) Power

(b) Pedestrian Signal

(c) Pedestrian Actuation

(d) Signal ~~Phase Identification~~

(e) Detection Loop Identification

(f) Interconnect

Signal cables shall be tagged to identify the direction of travel. Detector lead-in cables shall be tagged throughout the installation with the corresponding loop tag information.

~~Loop identification shall consist of the following:~~

~~Inside of the Detector Housing, the loop wires of each loop shall be tagged with, in _____, out _____, as shown on the plans.~~
~~Loop Number Loop Number~~

~~Inside of the Controller Cabinet, each lead-in cable shall be tagged within 6 in. (150 mm) of the terminal strip connection with: Lane designation, Phase Number, Loop Number, and when applicable with loop system number, and speed trap according with the plans.~~

~~Phase identification shall consist of the single number "1", "2", "3", etc., which corresponds to the phase diagram for the respective intersection. Tags shall be securely fastened to the cable with a non-corroding material.~~ The tagging material and fastening shall be approved prior to proceeding with this work. The color coded wires shall be connected properly. The white wire shall be the common or ground. Wire used for all identical indications of any individual phase shall be color coded and, where possible, shall use red wire to connect red lenses, orange wire to connect yellow lenses, and green wire to connect green lenses. Signal heads shall be assembled and wired before being installed. The testing of the loops shall be documented in the Loop Testing Table provided by the State.

805.08 Controller Cabinet, Signal Service, and Detector Housing Installation

Three document packets shall be prepared in accordance with 922.02(b) for each cabinet. Each packet shall be labeled with the name of the contract number, the intersection, the commission number of the signal and the date of installation. One packet shall be placed in the cabinet and the remaining two packets shall be submitted to the Engineer within 2 days after the signal is turned on. Information in the packets shall include all approved changes to the signal installation. All detector loop lead-in tags and detector rack labels shall reflect all approved changes to the signal installation.

Additional detector loop amplifier units and detector racks shall be supplied as directed by the Engineer. Additional detector racks shall include all cables or harnesses including, but not limited to a SDLC cable for each added rack, interface panels and a BIU to provide a complete and functional installation. Additional auxiliary BIU panels shall include all cables or harnesses including, but not limited to a SDLC cable for each additional auxiliary BIU panel, terminal strip on BIU panel and BIU to provide a complete and functional installation.

For signal cabinets installed by the Contractor, where no detector loop or lead-in work is included in the contract, the Contractor shall perform detector loop tagging, testing and vehicle simulator testing in accordance with 805.09, only to the extent of documenting the test readings and confirming that all existing detector loops are connected correctly and all detector related equipment in the cabinet is operating correctly.

The controller cabinet shall be mounted securely on a pole, pedestal, or concrete foundation. All cabinets on concrete foundations shall be installed with the anchor bolts inside. Controller cabinets on poles or pedestals shall be mounted at a height of 38 in. ± 2 in. (970 mm ± 50 mm). Pole mounted controller cabinets shall be fastened with 2 stainless steel bands as shown in the plans. Signal cables and lead-in cable shall be run in conduit from the controller cabinet to the signal support base and to detector housing as indicated on the plans. Galvanized steel elbows shall be used on the detector housing as shown on the plans.

The Contractor shall wire the entrance switch and bring service cable up the riser and out the weatherhead and leave 4 ft (1.2 m) of cable outside the weatherhead. The utility company, at their option, may bring the service cables to the load side of the entrance switch. Meter bases, if required, shall be obtained from the power company ~~and any service connection or miscellaneous charges shall be assumed by the Contractor~~.

A minimum of 12 in. (300 mm) and a maximum of 18 in. (450 mm) of loop wire duct will be permitted in the detector housing for each loop lead. Concrete used in the installation of detector housings shall be in accordance with 506, except 506.05 will not apply. A CMDS in accordance with 502.03 shall be submitted, however, utilization of the Department provided spreadsheet is not required. Where a portion of the road is closed or where there is no vehicular traffic, then class A concrete in accordance with 702 may be used. The concrete shall be placed flush with existing surface and shall be covered with a steel plate during the setting time.

805.09 Loop Wire Detector Installation

This work shall consist of placement and testing of loop wire detectors in accordance with the installation details shown on the plans.

~~MATERIALS~~

~~Loop wire shall be in accordance with 922.06(e)7b. Loop detector sealant shall be in accordance with 922.06(e)7c.~~

(a) Layout

The number, size, arrangement, and locations of loops shall be as shown on the plans except that loop spacing shall be adjusted to avoid PCCP joints. Loops shall be of a regular octagon shape with sides of 2.5 ft (0.75 m) in length or a circular shape with a diameter of 6 ft (1.8 m). Loops placed longitudinally adjacent in the same lane shall be spaced 15 ft (4.57 m) from the center of one loop to the center of the next loop. Loops shall be arranged so that no loop wire will be bent at an angle less than 120°. Regardless of configuration, the loop installation shall match the intention of the loop tagging table.

~~Loops~~ *Prior to installation, loop layout* shall be ~~of a regular octagon shape with side of 2.5 ft (0.75 m)~~ *approved* in ~~length. An outline shall be laid out and painted where the loops shall be sawed. The loop locations shall be subject to the review and approval of the~~ *writing by the* District Traffic Engineer. The *Contractor shall notify the* District Traffic Engineer ~~shall be notified 48 h~~ *a minimum of two business days* prior to ~~such field review~~ *the date that loop layout approval is required. All roadway centerlines, edge-lines and stop-bars pertinent to loop layout shall be accurately and clearly identified at the time loop layouts are reviewed for approval. An outline shall be painted where the loops are to be placed. The Contractor shall ensure that the final installed location of each loop matches the intention and functionality of the approved layout for loop spacing, lane width and geometry.*

(b) Installation

All loops and lead-in cables shall be tagged according to the plans and 805.07.

1. Saw-cut Loops

The slots shall be saw-cut as shown on the plans. *A diamond cutting blade shall be used for sawing all loops. All saw-cut loops shall have individual saw cuts to the detector housing. Joints shall be overlapped such that the saw cut at the corner is full depth.* ~~Slots shall be thoroughly cleaned and dried before the installation of loop wires.~~ *Prior to installing roadway loop wire in the roadway saw cuts, the saw cuts shall be cleaned in accordance with the manufacturer's requirements for the joint sealant to be used. After proper cleaning, the loop wire shall be installed. All loops shall be wired clockwise as viewed from above. Loops shall be wired with four turns or as specified then gently tamped with a blunt non-metallic tool. Backer rod 2 in. to 4 in. in length shall be spaced every 12 in. around the saw cut above the wire and gently tamped to hold the loop wire snugly in the bottom of the saw cut. Backer rod shall not be continuous around the saw cut. After installation of the loop wire, the saw cut shall be sealed with a joint sealant material. The sealant shall be poured into the saw cut making a water tight seal. The joint sealant material shall be installed in accordance with the manufacturer's recommendations and 906.02. However, the joint configuration shall not apply. A copy of*

the sealant manufacturer's written application instructions shall be submitted to the Engineer prior to any sealant operations. If the Contractor elects to use a sealant complying with 906.02(a)2, the sealant material shall be heated in a kettle or melter constructed as a double boiler with the space between the inner and outer shells filled with oil or other heat-transfer medium. This melter shall have a positive temperature control and a mechanical agitator. A backer rod shall be used for both cold applied sealants and hot poured sealants. The sealant material shall fill the saw cut as shown on the plans. All excess joint sealant on the pavement surfaces shall be promptly removed.

~~The specified number of turns shall be placed in the slot and gently tamped with a blunt non-metallic tool. A sash cord or backer rod shall be placed above the wire after tamping. The number, size, arrangement, and locations of loops shall be as shown on the plans. Loop spacing shall be adjusted to avoid pavement joints. Loop wire shall be pressed into the saw slot with a blunt non-metallic tool. Loop wire shall only be bent at angles of 120° or greater. All loops shall be wired clockwise as viewed from above. Loops shall be wired with 4 turns and in a series unless otherwise specified. Joints shall be overlapped such that the saw cut at the corner is full depth. The sealant shall be poured into the saw cut making a water tight seal. The splice of the loop wire and lead-in cable shall be soldered and waterproofed at the detector housing. Waterproofing shall consist of the use of heat shrink tubing which has an internal coating sealant material. The heat shrink tubing shall not be heated by means of a direct flame tool.~~ Loop wire and lead-in cable shall be tagged according to the plans and 805.07. The black lead-in wire shall be spliced to the loop wire which goes back to the field. Such wire shall be tagged as "Out/Loop (No.)". The white lead-in wire shall be spliced to the loop wire which comes in from the field. Such wire shall be tagged as "In/Loop (No.)".

2. Preformed Pave-over Loops

Preformed pave-over loops may be installed as a 1, 2, 3 or 4 loop configuration. Pave-over loops shall be secured in place prior to paving.

(c) Splices

For each loop cable and lead-in cable entering a handhole, there shall be 6 ft (1.8 m) of cable jacket remaining on each wire after the splice is complete. For each loop cable and lead-in cable entering a detector housing, there shall be 2 ft (0.60 m) of cable jacket remaining on each wire after the splice is complete. For all loop splices, there shall be a maximum of 0.5 in. (12 mm) of non-jacketed wire measured from the end of each cable jacket to the edge of the splice waterproofing material. The splice of the loop wire and lead-in cable shall be soldered and waterproofed at the detector housing or handhole. Waterproofing shall consist of the use of heat shrink tubing which has an internal coating sealant material. The heat shrink tubing shall not be heated by means of a direct flame tool.

(d) Testing and Acceptance

All testing and acceptance procedures performed by the Contractor shall be performed in the presence of the Department personnel assigned by the Engineer. The Contractor shall notify the Engineer a minimum of 2 business days prior to the date testing is to be performed.

~~TESTING~~

The Contractor shall meter all new loop wire detectors or a new bank of loop wire detectors by means of instruments capable of measuring electrical values for installed loop wires and lead-in cables. The instruments shall measure inductance in microhenries, resistance in ohms, induced A.C. voltage in volts, and leakage resistance in megohms. All measuring tests shall be performed at the detector housing before the loop wire is spliced to the lead-in cable, and at the cabinet after the loop wire is spliced to the lead-in cable.

1. Electrical Testing

~~(a)~~ *a.* Megohm Test Before Splice is Made at Detector Housing for Loop Wire

One of the megohm probes shall be connected to ground and the other probe shall be connected to the "in" or "out" loop wire. The remaining loop wire shall be isolated. The test shall then be performed.

~~(b)~~ *b.* Megohm Test Before Splice is Made at Detector Housing for Lead-in Cable

~~The 2 wires of the lead-in cable at the cabinet shall be twisted together and taped. The shield of the lead-in cable shall be grounded in the cabinet. At the detector housing, 1 megohm probe shall be connected to ground and the other probe shall be connected to 1 of the lead-in wires. The remaining lead-in wire shall be isolated. The test shall then be performed.~~

The 2 wires and shield of the lead-in cable at the cabinet shall be isolated and taped. The test shall consist of recording 4 readings taken at the detector housing or handhole as follows:

(1) Connect the 1st megohm probe to ground and the 2nd probe to the shield. Record the reading.

(2) Connect the 1st megohm probe to the 1st lead-in wire and the 2nd probe to the shield. Record the reading.

(3) Connect the 1st megohm probe to the 2nd lead-in wire and the 2nd probe to the shield. Record the reading.

(4) Connect the 1st megohm probe to the 1st lead-in wire and the 2nd probe to the 2nd lead-in wire. Record the reading.

The lowest of the 4 readings taken above shall be recorded on the testing document for acceptance.

~~(c)~~ *c.* Megohm Test After Splice is Completed at Cabinet

This test shall be performed after the splice at the detector housing is completed. A water solution of 1 tablespoon (15 ml) of baking soda per pint (0.5 L) of water shall be placed in a metal container. The metal container shall be grounded and the splice shall be

fully submerged in the solution for 2 min. With the splice submerged, the *shield of the lead-in shall be connected to ground at the cabinet. One* megohm *probe shall then be connected to ground and the other probe connected to one of the lead-in wires* ~~test shall be performed at the cabinet on the end of the lead-in cable~~ *and the reading recorded.*

~~**(d) Vehicle Simulator Test**~~

~~This test shall be performed after all other tests are completed and after all connections have been made at the controller in the cabinet. This test shall be performed by dragging a test vehicle across the loops using a non-conducting string. The test vehicle shall be fabricated with an 8 ft (2.4 m) length of No. 6 bare copper wire formed into a circle. The 2 ends shall then be electrically spliced. The detector unit amplifier shall record a call as the test vehicle is dragged across the loop. It shall cancel the call as the test vehicle leaves the loop.~~

2. Delay Amplifier Settings and Vehicle Simulator Test

After all detector loop testing is complete, the detector amplifiers shall be installed and settings adjusted for proper operation at the intersection.

The frequency setting shall be adjusted using the amplifier's display so that adjacent loops in the roadway that are connected to different loop amplifiers have a minimum difference of 5 khz. This operating frequency setting does not apply to loops that are adjacent to each other in the roadway but are connected to the same loop amplifier.

The sensitivity setting shall be adjusted using the amplifier's display. With an average size front wheel drive vehicle with the front axle centered over the back loop of a series of loops, the sensitivity shall be adjusted in accordance with the manufacturer's recommendations.

The count output shall be enabled for all loops designated as counting loops. The number of loops setting shall be set for loops designated for counting purposes and shall be set to the number of loops connected to that loop amplifier.

This test shall be performed by dragging a test vehicle across the loops using a non-conducting string. The test vehicle shall be fabricated with an 8 ft (2.4 m) length of No. 6 bare copper wire formed into a 2.5 ft (0.76 m) diameter circle. The two ends shall then be electrically spliced. The test shall be started with all detector amplifiers turned off except for one (1) approach. All amplifiers for that approach shall be turned on and adjusted to the proper settings as per 805.09(d)4. All traffic for the approach being tested shall be stopped and not allowed to cross any loops during the test procedure for that approach. The simulator shall be dragged slowly across each loop system in the same direction as to simulate a vehicle driving through the loop system. As the simulator crosses each loop an IMSA level II certified Signal Technician shall verify that a call is displayed exclusively on the corresponding loop amplifier, controller detector input and controller phase(s). After completely verifying the loops on the first approach the amplifiers shall be left on, and the amplifiers for the next approach to be tested shall be turned on and adjusted to the proper settings. The same procedure shall be followed for each remaining approach. With large intersections, as the test proceeds, it may become

difficult to verify that the calls are going to the correct detector inputs. In this case, traffic control shall be used to stop vehicles before reaching the loops for as many approaches as needed to accurately complete the testing to the inspector's approval. Testing may be paused between lanes to allow traffic to clear.

~~(e)~~ *3.* Acceptance Criteria

The Contractor shall record all test readings, in triplicate, on tabular forms provided by the Department or by copying the 1 included elsewhere herein. The Contractor shall complete, sign, and date the forms before submitting them to the District Traffic Engineer. The District Traffic Engineer will use these forms for recording the Department's readings on the corresponding space provided.

In order for the loop detector installation to be accepted, the electrical values shall be as follows:

~~1.~~ *a.* Inductance shall be between 80 and 800 µH. Inductance shall be determined by means of digital readout meter which drives the field loop system.

~~2.~~ *b.* Resistance shall be less than or equal to 8 ohms.

~~3.~~ *c.* *Induced AC voltage* ~~Voltage~~ shall be less than or equal to 3 V.

~~4.~~ *d.* ~~Induced A.C. voltage and leadage~~ *Leakage* resistance shall be greater than 100 megohms.

Loop wire and/or lead-in cable failing to meet this requirement shall be replaced at no cost to the State.

805.10 Magnetometer and Microloop Detectors

Before installation of Magnetometer or Microloop probes the Contractor shall confirm the adequacy of the magnetic field intensity, to be sure that the range is suitable for their operation. Arrangement of probes shall be located at maximum distance from steel support under bridges. Probes shall be installed with their long dimension vertical, and with the cable end at the top. Probes shall be firmly supported, so the lateral and vertical motion is restricted. Probes shall be connected in series. The splice shall be soldered by means of hot iron, or pouring or dripping without flames, with rosin core solder and shall be insulated and waterproofed in accordance with the manufacturer's specifications.

805.11 Steel Conduit

Conduit shall be installed to a depth of no less than 2 ft (0.6 m) or more than 5 ft (1.5 m) below the finished grade unless otherwise specified or approved. Pockets or traps where moisture might accumulate shall be avoided. Conduit shall be placed under existing pavement by approved jacking or drilling methods. Pavement shall not be disturbed without permission. If permission is granted, cuts in pavement areas shall be no greater than 24 in. (600 mm) wide. All cuts in the pavement and sidewalk areas shall be sawed. Sidewalk removal and replacement shall be to the nearest tooled joint. Jacking

and drilling pits shall be kept at least 2 ft (0.6 m) clear of the edge of any type of pavement or paved shoulder. Excessive use of water that may cause undermining of the pavement shall be avoided. Continuous conduit runs shall not exceed 250 ft (76 m) in length, unless otherwise indicated on the plans.

Expansion fittings as detailed on structure plans shall be installed where conduit crosses an expansion joint in the structure. Where it is deemed inadvisable to install expansion fittings in closely confined areas, the installation of approved flexible tubing may be permitted. Such expansion joints or tubing shall be the same size as the conduit. Any existing underground conduit to be incorporated into a new signal installation shall be cleaned with a mandrel and blown out with compressed air before cable is drawn into pipe. All new conduit runs shall be cleaned and swabbed before cables are installed. All conduit ends shall be capped and shall remain capped until the Contractor is ready to pull cable into the conduit, at which time the caps shall be removed and conduit bushings placed on each end to protect the cable. The inside surface of the conduit shall be kept clean. Conduit to be installed, indicated on the plans for future use of signal cables, shall be left in place with a pull cord on its entire length.

Larger size conduit may be used with no additional payment, but when it is used, it shall be for the entire length of the run from outlet to outlet. Conduit runs as shown on the plans are for bidding purposes only and may be changed, with permission, to avoid underground obstructions. A change order may be authorized if the conduit runs can be made on the opposite side of the street to that shown on the plans in order to avoid obstruction and traffic inconvenience or to avoid unnecessary tearing up of existing pavement.

805.12 PVC Conduit

The method of installing PVC conduit underground shall be the same as for steel conduit where applicable except trenches for the conduit shall be backfilled with 2 in. (50 mm) of sand before the conduit is placed in the trench. Materials excavated may be used for backfill, if approved. If the Engineer deems it necessary, approved B borrow shall be placed over the conduit to a depth of 12 in. (300 mm) and the remainder of the trench shall be filled with excavated material.

805.13 Foundations

Foundations for traffic signal poles, cabinets, and pedestals of the type specified shall be constructed, or existing M foundations shall be modified, as shown on the plans or as directed. Pedestal bases shall be plumb and firmly attached to the anchor bolts either by using leveling nuts or shims if top of the foundation is not level. Grouting shall be used when necessary to fill any gap between pedestal base and foundation. Pipe pedestals shall be screwed tightly into the bases and secured with a stainless steel pin. Power and signal cables shall then be pulled from the base into the cabinet. Curing of concrete shall be in accordance with 702.22.

During excavation of the foundation, all material shall be removed to the full depth as shown on the plans, except if class X material is encountered, the work shall be performed in accordance with 206.02(b).

805.14 Final Clean-Up

When the installation is completed, all disturbed portions of sidewalk, pavement, shoulders, driveways, sod, etc., shall be cleaned and any excess excavation or other materials shall be disposed. All cutting in the sidewalk and pavement areas shall be done with a saw. Sidewalk removal and replacement shall be to the nearest tool joint. Unless otherwise directed, cuts in pavement areas shall be no greater than 12 in. (300 mm) in width.

805.15 Method of Measurement

Traffic signal head, pedestrian signal head, pedestrian push button, controller cabinet foundation, M foundation modified to P-1 foundation signal steel strain pole, signal wood pole, signal cantilever structure, signal support foundation, signal service, disconnect hanger, magnetometer detector, microloop detector, loop detector delay amplifier, *loop detector delay counting amplifier, loop detector rack, auxiliary BIU panel,* signal handhole, signal detector housing, span catenary and tether, and span catenary for flasher will be measured by the number of units installed.

Conduit of the type specified will be measured by the linear foot (meter) from outside to outside of foundations. Signal cable and signal interconnect cable will be measured by the linear foot (meter).

Preformed pave-over loops will be measured by the number of loops placed. Each loop will be measured only once, regardless of the number of signal cable turns. Signal cable from preformed pave-over loops to handholes, detector housings or from loop to loop will not be measured for payment.

The accepted quantities for payment for electrical signal or loop lead-in cable will be the quantities shown in the Schedule of Pay Items. Such quantities may be corrected if they are in error by more than 25%.

Saw cut for roadway loop detector and sealant will be measured by the linear foot (meter) for the full depth of slot cut in the pavement as shown on the plans or as directed.

If class X material is encountered during foundation excavation, measurement will be made in accordance with 206.10.

Traffic signal installation or modernization, flasher installation or modernization, miscellaneous equipment for traffic signals, and final cleanup in accordance with 805.14 will not be measured for payment.

Traffic signal equipment removal ~~and~~*will be measured per each installation to be removed.* ~~t~~*T*ransportation of salvageable signal equipment will not be measured.

805.16 Basis of Payment

Traffic signal installation, flasher installation, traffic signal modernization, and flasher modernization, all of the type and the location number specified, will be paid for at a contract lump sum price.

If specified as pay items, traffic signal controller and cabinet, traffic signal head, pedestrian signal head, pedestrian push button, controller cabinet foundation, M foundation modified to P-1 foundation, signal steel strain pole, signal wood pole, signal cantilever structure, signal support foundation, signal pedestals, signal service, disconnect hanger, magnetometer detector, microloop detector, loop detector delay amplifier, *loop detector delay counting amplifier, loop detector rack, auxiliary BIU panel,* signal handhole, signal detector housing, span catenary and tether, and span catenary for flasher will be paid for at the contract unit price per each. Conduit of the type specified, signal cable, interconnect cable, electrical signal cable, loop lead-in cable, and saw cut for roadway loop detector and sealant will be paid for at the contract unit price per linear foot (meter).

Preformed pave-over loops will be paid at the contract unit price per each.

The removal of existing traffic signal equipment designated to be removed will be paid for at the contract ~~lump sum~~ *unit* price *per each* for traffic signal equipment, remove *for each location removed*. When designated as a pay item, the transportation of salvageable signal equipment will be paid for at the contract lump sum price for transportation of salvageable signal equipment.

Class X excavation will be paid for in accordance with 206.11.

Miscellaneous equipment for traffic signals will be paid for at a contract lump sum price.

Payment will be made under:

Pay Item	**Pay Unit Symbol**
Controller and Cabinet, _____, _____ Phase type no.	EACH
Controller and Cabinet, Flasher, _____ type	EACH
Controller Cabinet Foundation, _____ type	EACH
Controller Cabinet Foundation, M, Modify to P-1	EACH
Disconnect Hanger	EACH
Flasher Installation, Location No. _____	LS
Flasher Modernization, Location No. _____	LS
Handhole, Signal	EACH
Loop Detector Delay Amplifier, _____ Channel no.	EACH
Loop Detector Delay *Counting* Amplifier, _____ Channel no.	EACH
Loop Detector Rack	*EACH*
Magnetometer Detector	EACH
Microloop Detector	EACH
Miscellaneous Equipment for Traffic Signals	LS

Pedestrian Push Button .....EACH
Pedestrian Signal Head, _____, _____ .....EACH
type lens size
Saw Cut for Roadway Loop and Sealant .....LFT (m)
Signal Cable, _____, No. _____ Copper, _____ C/ _____.....LFT (m)
type conductors/size
Signal Cable, Preformed Pave-Over Loop ..... EACH
Signal Cantilever Structure, Mast Arm _____ ft (m).....EACH
length
Signal Detector Housing .....EACH
Signal Interconnect Cable, ____, No. ____
type
Copper, ____ C/ ____.....LFT (m)
conductors/size
Signal Pedestal, _____ ft (m) .....EACH
length
Signal Pole, Wood, _____, _____ ft (m) .....EACH
class length
Signal Service.....EACH
Signal Strain Pole, Steel, _____ ft (m).....EACH
length
Signal Support Foundation, _____ in. (mm) x _____ in. (mm)
x _____ in. (mm).....EACH
Span and Catenary for Flasher .....EACH
Span, Catenary, and Tether .....EACH
Traffic Signal Equipment, Remove..... ~~LS~~*EACH*
Traffic Signal Head, _____ Way, _____ Section, _____ .....EACH
no. no. lens sizes & colors.....EACH
Traffic Signal Installation, _____, Location No. _____ .....LS
type
Traffic Signal Modernization, _____, Location No. _____.....LS
type
Transportation of Salvageable Signal Equipment.....LS

The cost of the solar panel, battery cabinet, program timing module, signal heads, wiring, and all hardware required to complete the installation shall be included in the cost of flasher installation or flasher modernization.

The cost of all wiring, hardware, anchor bolts, and associated equipment required to operate the intersections shall be included in the cost of controller and cabinet, flasher.

The cost of signal face hook-up wire, pole plates and arms for side mounts, mid-mast arm mount, pipe arms, signal brackets, visors, louvers, bulbs, span hanger, backplates, balance adjuster, weatherhead, and all additional hardware required to assemble a combination of signal faces as shown on the plans shall be included in the cost of traffic signal head or pedestrian signal head.

The cost of the push button, pedestrian actuated signal sign, and all hardware required to complete the installation shall be included in the cost of pedestrian push button.

The cost of concrete, conduits, grounding bushings, ground rod, ground wire, drainage, and all hardware required to complete the installation shall be included in the cost of controller cabinet foundation.

The cost of the base plate, metal skirt base plate, anchor bolts, handhole and cover grounding lug, 2 in. (50 mm) pipe cable entrance, J hook, and top cover as shown on the plans shall be included in the cost of signal strain pole, steel.

The cost of downguys, anchor rods, downguy guards, and hub-eyes as shown on the plans, and all hardware required to complete the installation shall be included in the cost of signal pole, wood.

The cost of all hardware including the metal skirt base plate, where necessary, to complete the installation as shown on the plans shall be included in the cost of signal cantilever structure.

The cost of concrete, reinforcing steel, conduits, ground rod, ground wire, grounding bushings, and all hardware required to complete the installation shall be included in the cost of signal support foundation.

The cost of the pedestal metal base, pedestal pole, pole cap when necessary, anchor bolts, and all hardware required to complete the installation shall be included in the cost of signal pedestal.

The cost of weatherhead, 1 in. (25 mm) conduit riser, entrance switch, 1 in. to 2 in. (25 mm to 50 mm) conduit reducer, ground rod, ground wire, and all hardware required to complete the installation, including the meter base when required and supplied by the utility company shall be included in the cost of signal service.

The cost of the detector unit, lead-in cable, and all work necessary for proper installation shall be included in the cost of magnetometer detector or microloop detector.

The cost of the slot cut on the pavement, ~~sash cord,~~ backer rod, loop sealant, and all testing in accordance with 805.09 shall be included in the cost of saw cut for roadway loop and sealant.

The cost of signal cable from preformed pave-over loops to handholes, detector housings or from loop to loop shall be included in the cost of the preformed pave-over loop.

The cost of all work and hardware required to properly install overhead or underground signal cable as shown on the plans or as directed shall be included in the cost of signal cable and signal interconnect cable.

~~The cost of the independent shelf mount unit or card-rack unit, and power module shall be included in the cost of loop detector delay amplifier.~~

The cost of concrete reinforcing pipe, ring and cover eye bolts, hardware, handhole bottom, and aggregate under the handhole bottom as shown on the plans shall be included in the cost of handhole, signal.

The cost of aluminum casting, enclosure concrete, steel conduit and elbow, and all hardware required to complete the installation shall be included in the cost of signal detector housing.

The cost of steel pole bands or straight eye bolts, span, catenary, and tether of wire rope cables, cable rings, type A support cable, wire rope clips, safety cable, thimble, service sleeve, and all hardware required to complete the installation as shown on the plans shall be included in the cost of span, catenary, and tether for signal, or span and catenary for flasher.

The cost to repair or replace damaged or lost salvageable traffic signal equipment shall be at the Contractor's expense.

The cost of excavation, backfill, final cleanup in accordance with 805.14, and necessary incidentals shall be included in the cost of the pay items in this section.

922-T-168 TRAFFIC SIGNAL MATERIALS AND EQUIPMENT

(Revised 05-23-11)

The Standard Specifications are revised as follows:

SECTION 922, DELETE LINES 1 THROUGH 1850.

SECTION 922, AFTER LINE 1850, INSERT AS FOLLOWS:

SECTION 922 – TRAFFIC SIGNAL MATERIALS

922.01 Description

All traffic signal materials and equipment shall be in strict accordance with the NEMA TS 2-2003 Standards Publication, and be fully compatible with the Department's current inventory of signal equipment, unless specifically outlined in the following specification.

922.02 Traffic Signal Control Equipment

Models shall be selected from the Department's list of approved Traffic Signal Control Equipment, unless otherwise specified.

(a) Model Approval

Each model of controller assembly, CA, and all major units, as defined in NEMA TS2-2.1.1, will be tested and evaluated by the Department's Logistical Support Center, and approved prior to use. The CA, as defined by NEMA TS2-1.1.7, as being a complete electrical unit, shall include major units operational in a TS2 environment. Major units of the CA are defined as Controller Unit, CU, Malfunction Management Unit, MMU, Bus Interface Unit(s) (BIU), Cabinet Power Supply, Load Switches, Vehicle Detector equipment, Cellular Modems, Radio Modems, and Flasher. The evaluation of a product will be considered when the Department receives the preliminary product evaluation submittal form. The Department will advise the manufacturer or vendor, of the date of delivery at which time a presentation of the product will be required accompanied by the product brochure(s), the operational manual(s) containing procedures for all features incorporated in the CU's design, and the maintenance manual(s) containing all schematics, pictorial parts layouts, components parts listings, and documented theory of operation. Certification in accordance with 922.02(d) shall also accompany the preliminary product evaluation form. If a product has TS2 communicative capabilities, then a data analysis interpretation offered in a decimal form expressing frames by an SDLC Protocol Analyzer shall accompany the initial documentation as well. When accuracy of documentation is validated, the evaluation period may commence. In addition, all computer system software applicable to a manufacturer's product shall work with the Department's current operating systems so that upgrades will not be needed to recognize the full potential of the product. Any product under evaluation that has an operational failure occurring during the bench test procedure will be rejected and returned to the submitter. The product will not be considered for future evaluation without a cover letter documenting failures encountered and changes to the design to correct the failures. A presentation by the manufacturer of the product in question and explanation of why the product failed will be required. Resubmittal of the original product will be expected for testing, evaluation, and approval. Furthermore, 2 more

rejections of a product submitted for evaluation will be cause to deny approval of that model permanently.

Continued failures indicative of a trend, repeated random malfunctions, or NEMA non-compliance of an approved product shall be cause to remove that model from the Department's list of approved Traffic Signal Control Equipment. If the manufacturer makes any changes to an approved model of major unit and/or controller cabinet terminal/facilities to correct a non-NEMA compliant or safety issue, the Department is to be notified immediately. The manufacturer will be required to correct all existing equipment purchased by the Department either directly, by contract, or through agreement prior to the change being incorporated at the manufacturer's production level.

A design change to an approved model of a CA or any major unit will require a submittal of documented changes. At the discretion of the Department, resubmission of the model for testing, evaluation, and approval may be required. The permanent addition or removal of component parts or wires, printed circuit board modifications, or revisions to memory or processor software, are examples of items that are considered to be design changes.

(b) Controller Assemblies or Major Units Furnished and Installed by the Contractor

A CA, as defined by NEMA TS2-1.1.7, shall be provided by the Contractor and shall be built to the specifications of the intersection design.

Each CA shall be supplied with three documentation packets. The documentation shall be provided in both paper hard copy and electronically as specified for each document. Each packet shall consist of:

1. *One complete set of wiring and schematic diagrams for all of the CA's panels, racks and wiring; the electronic document shall be Adobe (.pdf) and have a minimum of 1 indexed page for each paper sheet.*

2. *A Parts List indicating Contract Number, Vendor, Category, Manufacturer, Model, Serial number, Software/Firmware version as applicable, and Inventory number of all major units incorporated in the CA; the electronic document shall be MS Excel (.xls) and the blank worksheet shall be obtained from the Department's Logistical Support Center.*

3. *An 11 in. x 17 in. intersection design plan; the electronic document shall be Adobe (.pdf).*

4. *A completed Department approved Loop Tagging Table; the electronic document shall be MS Excel (.xls) and the blank worksheet shall be obtained from the Department's Logistical Support Center.*

5. *Packet number 2 shall also include a paper hard copy and an indexed and searchable electronic pdf format file of the instructional programming manual(s) identical in nature to that approved for use during the evaluation of each product and shall include a TS2 type 2 to TS2 type 1 adapter harness.*

All electronic documents shall be saved to CD (compact disk, CD-R or CD-RW) in the specified format for each document. Each packet shall be labeled with the name of the intersection, the contract number, the commission number and the date of installation. Packet destinations shall be as per 805.08.

A 60 day burn-in period of traffic control equipment shall be required prior to acceptance of the contract. The Contractor shall be responsible for all costs associated with vendor or manufacturer warranty service until acceptance of the contract, or acceptance of that portion of the contract where the traffic control equipment is installed.

(c) Warranty

A five-year manufacturer's or vendor's warranty shall be provided for all major units operating in a TS2 environment. Light Emitting Diode (LED) signal indications shall have a 5-year manufacturer's or vendor's warranty. Video detection equipment shall have a 10-year manufacturer's or vendor's warranty period on processors, integrated camera/processor units, rack mount cards, hubs, minihubs and camera interface panels. CCD video cameras shall have a 5-year manufacturer's or vendor's warranty. Load switches and flashers, shall have a 2 year manufacturer's or vendor's warranty. Warranty periods shall commence from the date of field placement of the device or on the date of signal turn-on as shown on the I.C. 636a form if purchased through a contracting agent.

(d) Certification of NEMA TS2 Traffic Control Equipment

The following certifications shall be furnished.

1. Certification of a Production Run Model

A certification representing each model of approved major unit of a CA shall be on file with the Department. A certification of a production run model for a CU will be valid for a maximum period of five years from the date of approval or unless a significant change is made in the CU. If a significant change is made, a new certification shall be submitted. A significant change shall be the addition or deletion of any function or feature in the control unit, or any other change as defined in 922.02(a) to the circuitry in the product.

2. Certification of Environmental Testing

A certification shall be furnished with each major unit approval request indicating it has been tested and is in accordance with the tests from NEMA TS2-2. The certification shall specify the model and serial number of the product being tested. A complete log of each test shall be provided to the Department and will be maintained by the Department. The log shall show which, if any, controller component failed during the test, when it failed, and what steps were taken to repair the controller. The log shall include the date of testing, name and title of person conducting the tests, a record of

conditions throughout the tests, and a temperature and humidity verses time chart. The maximum report interval of any chart shall be 24 h. The chart shall be from a recording machine used to monitor the status of the environmental chamber during testing.

(e) NEMA TS2 Fully Actuated Solid State Controller Unit (CU)

The following requirements are the minimum for the design and operation of a 16 channel fully-actuated solid state CU. The NEMA TS2 configuration will consist of 2 types of CU's, type A1 and type A2, as defined in NEMA TS2-3.2.

The CU shall be in accordance with NEMA TS2 Standards, all provisions contained herein, and the Department's specifications. Manufacturer specific enhancements are acceptable, however no function or device shall preclude the interchangeability of a CU with another CU of like NEMA specification within a controller assembly.

1. General Requirements

The CU shall be microprocessor based and both versions shall contain a three port configuration and shall operate in the NEMA TS2 type A1 environment.

The CU shall include provisions for time-of-day programming. The CU shall be capable of a minimum of 50 programmed events and be in accordance with NEMA TS2-3.8.

A removable nonvolatile EEPROM module shall be utilized in each CU to maintain all programmed data. A real-time clock shall be battery-backed and active during a power outage so as to provide complete time keeping functions and leap year corrections. A switch or other means shall be provided to turn off or disconnect battery power during storage. This shall be accomplished without physical removal of the battery. Batteries within the CU shall be turned off or disconnected during storage and shipment.

Programming and maintenance manuals for approved CU's shall be identical in nature to that approved for use during the evaluation period of the CU. The Department shall be notified of any changes to the manuals.

Serial number and model numbers shall be permanently applied on or near the front of circuit boards of the CU and viewable without removing or disconnecting the board. Serial number and model number of the main frame shall be permanently applied externally on top or on the front panel.

2. CU Requirements

The requirements set forth herein refer to a type A1 and A2 CU. Where differences occur between types, it will be designated.

The CU shall have, as a minimum, the internal diagnostics defined by NEMA TS2-3.9.3.

The CU shall monitor and log the status of events as specified in NEMA TS2-3.9.3.1.5 in non-volatile memory and shall be selectable via program entry and be retrievable by the system computer via NEMA Port 2 or 3. In addition, the CU shall have the ability to log an MMU fault as it occurs. A minimum of 16 entries shall be stored in non-volatile memory. When capacity is exceeded, the oldest entry will be replaced by the newest. Logged entries shall at minimum contain the date and time denoted in military style with minute resolution, description of the fault as it would appear on the MMU, and the status of each of the channel inputs at the time the fault occurred, clearly denoting the presence of activity on a channel.

The CU shall be capable of all inputs and outputs listed by controller type in NEMA TS2-Section 3. Pedestrian timing shall be provided on all phases of a CU. Unless otherwise indicated on the plans, the CU, when delivered, shall be programmed to initialize in phase 2 and phase 6 green, however, the CU shall be keyboard programmable to permit initialization in any color and phase. Initialization shall occur after a recognized power interruption, upon MMU reset, or upon return from manual or time-of-day flash. The CU shall be programmable from a closed loop computer system, a laptop computer using the RS232 port, front panel programming, and by downloading from another like CU through the RS232 port.

Keystroke buttons shall be clearly marked as to function. All programming buttons and indicators pertinent to the operation of a phase shall be on the front of the CU and shall have programmable phase omitting and phase skipping capabilities.

The TS2 Type A2 version CU shall be in accordance with all applicable requirements for a Type A2 CU as defined by NEMA TS2-3 and shall contain a full compliment of connectors.

3. Internal Modules

All plug-in modules shall be equipped for easy removal or installation without the use of tools and shall be readily accessible for maintenance. All internal module plugs and edge card plugs shall have the corresponding pin connector position labeled with the first and last numbers or the first and last letters.

4. CU Enclosure

The enclosure shall be of adequate strength to protect the components during normal handling. The keypad, liquid crystal display and all interface connectors required for the operation and standard field adjustments shall be mounted on the front panel. Fusing shall be on the front panel of the CU and shall provide protection from internal or external overload.

The front panel of the controller shall be fastened to the frame such that no special tools shall be required to remove or replace printed circuit board modules nor to gain access through the front panel. All hinges shall have stainless steel pins.

5. Firmware and Software Revisions

The Department's Logistical Support Center shall be notified each time an update or revision of the firmware or software is released, explain the changes, and the benefits

of the change. The Department will determine if and to what extent a revision is to be placed into field operation and may fully re-evaluate the CU with the revision.

(f) NEMA TS2 Cabinet, Auxiliary Equipment, and Terminal and Facilities (TF) Requirements

These standards define the minimum requirements for a TS2 Type A1 cabinet, both inside and out. The performance and construction of the cabinet shall be in accordance with the applicable requirements of NEMA TS2 sections 4, 5, 6, & 7. The serial number and model number of the auxiliary equipment shall be permanently applied externally on or near the front of the product. Programming and maintenance manuals for approved products shall be identical in nature to that approved for use during the evaluation period of the product. The Department shall be notified of all changes to the documentation. Manufacturer specific enhancements are acceptable, however no function or device shall preclude the interchangeability of an auxiliary product with another product of like NEMA specification within a controller assembly.

1. Controller Cabinet Requirements

The NEMA TS2 Type A1 controller cabinet shall be in accordance with the following requirements.

a. General

The cabinet and the shelf or shelves shall be fabricated of aluminum. The cabinet shall be 0.125 in. (3.175 mm) minimum thickness sheet aluminum or 0.25 in. (6.35 mm) minimum thickness die-cast aluminum. The cabinet exterior and interior including shelves shall have a sandblasted, roughened, or chemically etched finish that reduces gloss, reflection, and glare.

The main cabinet door shall use a Corbin Lock No. 2 and each cabinet shall be furnished with 2 No. 2 keys. The lock shall open in a counterclockwise motion only. The door shall be capable of being opened and stopped in at least the following 2 ranges of degree opening as measured from the face of the cabinet door on the hinged side: 80 to 100°, and 170 to 190°. The door shall be hinged on the right side of the cabinet. The main door and the police panel door shall close against a weatherproof and dustproof gasket seal, which shall be permanently bonded to the cabinet. A standard police panel key shall be provided with each cabinet.

A rain channel shall be incorporated into the design of the main door panel to prevent liquids from entering the enclosure. A 1.5 in. (38 mm) deep drawer shall be provided in the cabinet, mounted directly beneath the controller support shelf. The drawer shall have a hinged top cover and shall be capable of accommodating 1 complete set of cabinet prints and manuals. This drawer shall support 50 lb (23 kg) in weight when fully extended. The drawer shall open and close smoothly. Drawer dimensions shall make maximum use of available depth offered by the controller shelf and be a minimum of 24 in. (610 mm) wide.

b. Switches, Auxiliary, and Environmental Feature Requirements

The cabinet shall have a police door and a police control panel within the main door. The police panel shall have 2 different switches, 1 switch for field indication cutoff

and 1 switch to transfer between automatic signal control and flashing operation. The switches shall be protected from water when the cabinet door is open.

A test switch panel shall be mounted on the inside of the main door. The test switch panel shall include, as a minimum, the following switches. An Auto/Flash Switch shall be installed so that when in the flash position, power shall be maintained to the controller and the intersection shall be placed in flash. A Stop Time Switch shall be installed so that when in the 'On' position the controller shall be stop timed in the current interval. A Controller Equipment Power On/Off Switch shall be installed which shall control AC power to the CU, MMU, and cabinet power supply. All switches mounted on the switch panel on the inside of the main door shall have in place a mechanism to prevent accidental activation of the switch. "Locking bat" type switches or side switch guards are acceptable. Switch guards, if used, shall be in place for each switch, shall be made of the same material as the cabinet, and shall permit the operation of the switch without the use of tools.

All switch functions shall be permanently and clearly labeled. Hand written labeling will not be permitted.

The cabinet shall include all required wiring, connectors and adapters to provide full compatibility and interchangeability with either a TS2 type A1 or type A2 controller.

c. Receptacle

The cabinet shall contain 1 duplex convenience outlet and a lamp receptacle that is actuated and turns on when the door is open and goes off upon closing of the door and an internal ON/OFF switch which can override the preceding. The convenience outlet shall be duplex, three-prong, NEMA Type 5-15R grounding outlet in accordance with NEMA WD-6, with ground-fault circuit interruption as defined by the National Electric Code. These units shall be protected with a 15-amp cartridge fuse wired ahead of the multi-breakers.

Master cabinets shall have an additional duplex, three prong, NEMA type 5-15R grounding outlet. This outlet shall be powered by the 10-amp circuit breaker and through a separate power interrupt switch providing separate control of the master CU power supply.

d. Fan and Filter

The cabinet shall contain a thermostatically controlled ventilating fan and a vent with a commercially classified uniform 1 in. (25 mm) thick filter. The thermostat shall be manually adjustable from 90 to 115°F (33 to 45°C). The fan shall be mounted internally at the top and toward the front of the cabinet to exhaust out the front top lip of the cabinet. The fan shall be rated at a minimum of 100 ft3 (3 m3) per minute as designated by NEMA TS2, Section 7.9.1. The thermostat shall be located within 6 in. (150 mm) of the fan.

The filter size will be according to the provisions for the type of cabinet as stated in NEMA TS2, Section 7.9.2.3 and shall be a replaceable pleated air filter with a Minimum Efficiency Reporting Value (MERV) rating of 5 or higher as defined by the

ASHRAE 52.2-1999 specification. The cabinet ventilation shall be in accordance with NEMA TS2-7.9.

Each inductive device, including the fan, shall have a separate power surge protection.

2. Load Switch and Flasher Requirements

The cabinet shall contain a jack mounted type 3 solid state non-repairable flasher in accordance with NEMA Standards TS2-6.3 electrical and physical dimensions.

The pedestrian load switch and the signal load switch shall be an approved unit meeting all electrical and physical dimension requirements in accordance with NEMA TS2-6. The load switch shall not use a printed circuit board to transmit the 115 volts AC line input or signal buss output. Each load switch shall offer three indicators, 1 for each circuit indicating the status of the input to the load switch.

The load switch signal outputs shall be brought to a separate terminal strip for hook-up of the signal displays. Load switches inputs shall be capable of being programmed for flash, overlap, vehicular, or pedestrian phases with the use of a standard slotted or phillips screwdriver via the cabinet terminal strip. The load switch input programming of the TS2 Type A1 CA shall be accomplished through front panel data entry of a TS2 Type A1 or a TS2 Type A2 CU.

3. Terminal and Facilities Requirements

a. General Requirements

The TF layout shall be in accordance with NEMA TS2-5.2.7. The cabinet shall contain a main TF panel complying with NEMA TS2 section 5 standards. The model number of the main panel shall be permanently applied to the front of the panel, where it is easily readable, without removing or disconnecting the panel. Each controller input and output circuit shall terminate on the main TF panel or on a supplementary panel. The phase arrangement of the controller shall coincide with the channel arrangement of the load switches and MMU. All outputs on channels 9 through 12 field connections shall have a 1-microfarad capacitor placed at each output terminal on the front of the TF panel. All TFs within the cabinet shall be readily accessible for field connection without removing the controller or associated equipment and for maintenance in the cabinet. All stranded wiring shall be tinned. A 24 volt relay shall be used on the TF to remove 24 volt DC from the common side of the load switches, effectively taking the mercury relay out of the circuit when the signal is put in mechanical flash. The TF panel shall be hinged at the bottom and capable of swinging down, to allow accessibility of the wiring and terminals at the rear of the panel. The backpanel shall be attached to the cabinet such that access to the backside of the backpanel, for maintenance purposes, shall be accomplished without the use of special tools or removal of auxiliary panels, shelving, or other cabinet appurtenances. A bracket extending at least half the length of the NEMA load switch shall support all load switches.

Terminals shall be consecutively numbered on both sides of the TF panel and shall be in compliance with the appropriate schematic diagrams. All positions for load

switches, flasher, and mechanical relays shall have reference designators on both sides of the TF panel. All nomenclature shall be on or adjacent to the component or terminal. All nomenclature shall be machine produced and not handwritten. Cabinet prints shall identify the function of each terminal position.

CU and MMU harness cables shall be of sufficient length to allow units to be placed on either shelf or on top of the cabinet while remaining in operational mode. RS-485 Port 1 communications cable shall also be of sufficient length to allow any Port 1 cable to be utilized with any TS2 unit within the CA. The RS-485 harness shall be constructed of a high quality shielded communications cable. The TF panel shall contain a Resistor/Capacitor Network Circuit which will provide an external restart pulse to initiate the startup sequence upon initialization from flash.

Remote flashing shall be provided for all signal circuits. Unless otherwise indicated on the plans, phases 2 and 6 shall be wired to flash yellow. All other phases shall be wired to flash red. Flashing for signal circuits shall be activated on 1 circuit for odd numbered phases and on the other circuit for even numbered phases.

b. Power Panel Requirements

A transparent plexiglass cover shall be provided over the CA power supply panel. The cover shall leave the switches on the breakers exposed as well as leave access to terminals at the bottom of the panel for wiring purposes. No terminals on the power panel shall have silicon protectant on them in lieu of the plexiglass cover. The panel shall contain a multi-breaker with one 10-ampere circuit breaker to provide overload protection to the CU, MMU, BIU, +12/24 VDC cabinet power supply, and detection devices. It shall also contain 1 main circuit breaker of 35 or 40 ampere, to provide overload protection to the signal and flash buss load. All breakers shall have line and load terminals clearly labeled. The signal bus shall be connected to the incoming AC line through a mercury contact switch or a solid state control device functionally equivalent to the NEMA 5.4.2.3 specified contact switch. The terminals for AC + and - input to the cabinet shall be capable of accepting a No. 6 wire.

With the CA 10 ampere and Main 35-40 ampere circuit breakers off (tripped), all units inside the cabinet and the intersection display shall be off. With the 10-amp breaker on and main 35-40 ampere circuit breaker off, the signal output shall be off and the major units within the cabinet shall function. With the 10-amp breaker off and main 35-40 ampere circuit breaker on, the intersection shall be in flash mode and all units within the cabinet will be off.

The cabinet shall contain a 50 kA 8 x 20 µs surge suppressor. The surge suppressor shall be a 120 vac 15 amp, minimum 2-stage parallel/series type device and protect lines: Line-Neutral, Line-Ground and Neutral-Ground, have a maximum continuous operating voltage of 140 VAC, maximum clamp voltage of 350 volts and device status indicators of green/good and red/failed. The device shall plug into a Nema 12 position terminal base wired before and in parallel with the 35-40 amp main signal buss circuit breaker and in series with the 10-amp circuit breaker for the solid state equipment and provide for a tool-free replacement of the device. There shall be a minimum of 2 electrical receptacles on the equipment side of the device for tuture

auxiliary equipment. The surge suppressor shall operate between -30 to 165°F (-34 to 74°C). The dimensions of the unit shall not exceed 4.5 in. (114 mm) wide by 7 in. (178 mm) long by 3.5 in. (89 mm) deep.

All equipment capable of operating at 12 or 24 vdv typically powered by an individual receptacle type power supply shall have a power cable permanently wired into the cabinet and the device shall be powered by the cabinet TS2 power supply

4. MMU Requirements

The cabinet shall contain a MMU and shall be in accordance with the standards of NEMA TS2-Section 4. The MMU shall be wired to monitor each load switch output.

5. BIU Requirements

All BIU's shall be in accordance with NEMA TS2 1998, Section 8. Edge mounted printed circuit boards and rack cards shall not have jumper wire modifications unless the jumper wires are permanently bonded to the PCB over its entire length. BIU's shall be supplied with each cabinet to allow for maximum phase and function utilization for which the cabinet is designed.

6. Loop Amplifier Units and Rack Requirements

a. General

All loop amplifier units shall be in accordance with NEMA TS2-Section 6 and shall follow type C, 2 channel with delay and extend, as stated in NEMA TS2-6.5.2.2.1. All amplifiers shall be selected from the Department's List of Approved or Prequalified materials for each type of amplifier. In addition, loop amplifiers shall have an LCD display or a RS-232 serial data connection and software interface capable of displaying loop status including but not limited to operating frequency and -ΔL/L, diagnostics, and all amplifier settings and operating parameters. Edge mounted printed circuit boards and rack cards shall not have jumper wire modifications unless the jumper wires are permanently bonded to the PCB over its entire length.

All detection components including amplifiers, racks, auxiliary BIU, interface panels, lead-ins, and all connecting harnesses shall provide 1 count output channel per lane of each approach within project limits.

All loop amplifiers designated for counting shall meet all requirements as above and shall additionally transmit channel 1 & 2 count pulses on the edge connection assigned to channels 3 & 4 respectively. Counting amplifiers shall be configured with count outputs mapped to and recorded in the CU detector logs. The status output of each active counting channel (3 and/or 4) shall be set to logic ground by software configuration within the amplifier or externally by use of jumper card in the adjacent slot.

An auxiliary BIU panel may be used strictly for count outputs (channels 3 and/or 4 only); in this configuration, the status outputs for those count output channels may be wired to logic ground on the BIU panel. The status outputs for all standard output

channels shall provide accurate status data at all times. All detector input data to the CU shall remain accurate at all times.

All size 5 (M) & size 6 (P-1) cabinets shall incorporate a 16 channel detector rack, configuration #2, as per NEMA TS2-5.3.4 and shall allow operation of a 2 channel detector in each slot and the capability of operation of a 2 channel counting amplifier in each even-numbered slot with the respective count outputs in each odd numbered slot. The number of detector racks provided shall be determined by the loop tagging table. All size 3 (G) cabinets shall incorporate an 8 channel detector rack, configuration #1, as per NEMA TS2-5.3.4.

All detector loop panels and detector racks shall be labeled according to the loop tagging table and as follows.

All detection shall be labeled in such a way that the numbering for any 1 loop is consistent throughout the cabinet; the Loop terminated as Loop or Detector 17 shall be Detector Channel 17 in the detector rack and Detector Input 17 to the controller.

b. Loop Termination Panel

Each loop lead-in panel shall be labeled on the upper left corner with the loop numbers that are terminated on that panel as follows: (1-16), (17-32), (33-48), (49-64). Each loop termination point shall be labeled with the corresponding loop number. Example: For panel 17-32; loops terminated on this panel will start with 17 and end with 32.

c. Detector Rack

Each detector rack shall be labeled at the bottom of the rack with 1 continuous label. The label shall be one 1 in. wide, thermal printed black on clear, white or matte polyester tape with permanent adhesive, water, chemical and scratch resistant printed with four lines of arial, size 10 font. Below the BIU shall be the BIU number and detector channel numbers that are contained within the rack as follows: (1-16), (17-32), (33-48), (49-64). This area shall also be contain the Intersection for diamond interchanges controlled from 1 cabinet. Each slot shall be labeled below the module with the corresponding loop tag information; the count output number portion of the information shall be under the first part of the tag information. For each 2 channel module, channel 2's label shall be below channel 1's label.

7. Cabinet Power Supply Requirements

The TS2 cabinet power supply shall adhere to the guidelines of NEMA TS2-5.3.5. The power supply shall be encased on all sides so that no circuitry is exposed to the user.

8. Cellular Modems

a. Service Provider

All data, power and antenna cables and all supplemental hardware shall be provided. The modem shall be compatible with the Department's current cellular carrier/provider (Verizon as of 07/07) and the traffic control device and closed loop communications software that it is supplied for.

b. Modem Hardware

Cell modems shall be Airlink Raven CDMA C3211 or similar modem with the following specifications: The Cellular Modem shall be capable operating in CDMA dual mode (both 800 MHz cellular and 1.9 GHz PCS bands), supporting both circuit switched and 1XRTT packet switched services. The operating voltage range shall include 12v and 24v DC and shall draw less than 250 ma while transmitting and receiving at 12v DC. The modem shall have LED indications for power, signal status/strength, and TX/ RX either separately or combined. The serial interface shall be RS-232 with a DB-9 (m or f) connector.

c. Modem Antenna

The RF Antenna connection shall be a 50 ohm TNC connector. The antenna shall be a low profile, puck style, flat mount Dual Band, (800 and 1900 MHz) with Low Loss RG-58 cable and TNC connector.

d. Modem Software

The modem configuration shall be editable and viewable with MS-Windows provided software or with proprietary software that is included and designed to run on a MS-Windows operating system. The software shall auto-detect connection parameters and display settings when connected.

e. Installation

Service and activation shall be requested and/or confirmed for each cellular device to be installed prior to installation. The ESN and 10 digit phone number shall be clearly labeled on the exterior of the modem. The cellular modem shall be installed, configured and tested to allow data communication from the central closed loop software to the field master and subsequent secondary controllers, or directly to a secondary controller per the design. All data, power and antenna cables and all supplemental mounting hardware shall be installed. The modem shall be powered by the cabinet power supply from a terminal location on the cabinet back panel or the power distribution panel. A low profile antenna shall be mounted externally and the mounting location includes a watertight seal. The antenna shall have no more than 3 ft excess RG-58 cable in the cabinet.

9. Radio Interconnect Using Spread Spectrum Radio Modems

Spread spectrum radio modems for communications between local controllers and the system master controller shall be on the Department's list of approved Traffic Signal Control Equipment and shall be in accordance with ASTM E 2158, and as set out herein.

The spread spectrum radio modems shall provide all the needed features to communicate with NEMA TS-2 type 1 and type 2 traffic signal controllers in a coordinated closed loop system. The radio modems shall be software configurable to be either a master, repeater, repeater/slave, or slave radio. The radio modem shall require no user license from the FCC; operate in the 900 MHz range, and be of FHSS (frequency hopping spread spectrum) technology; support data rates from 1.2 kbps to 115.2 kbps asynchronous; have a receiver sensitivity of at least -110 dBm; have a minimum RF

output level of 1 watt; have a minimum of 50 user-selectable hopping patterns and a minimum of 50 RF non-overlapping channels allowing multiple systems to operate in the same line-of-sight path; operate as a transparent RS-232, or RS422/RS485, or FSK 1200 Baud types of links for use in a point-to-multipoint system; have an external SMA female type or N-female RP-TNC female antenna connector; and be supplied with power supply for 120v AC operation. The modems shall be rack or shelf mounted in standard NEMA TS-2 type 1 or type 2 cabinets. The modems shall have an operation temperature of -40 to +176°F (-40 to 80°C), have a maximum current draw of 500 mA for the transmission of 1 watt of RF output power, while operating on 12v DC. Lighting and transient protection on all data lines and antenna connector, and AC/DC power distribution, shall be provided with the system.

The spread spectrum radio modems must include a Windows based, configuration software package, which will include a GUI, graphical user interface, allowing for ease of programming, through pre-written drivers for all Department approved traffic controllers and have the ability to automatically determine, and connect, at their radios baud, stop and parity settings. The configuration software must allow for signal level, RSSI, data integrity, message polling, and spectral analysis testing. The software must also permit all the radios within a system to be configured from a single location. All radio equipment and cables shall be delivered preconfigured and ready for field operation.

The manufacturer, or vendor, shall supply with each modem, the operational manual(s) containing procedures for all features incorporated in the modem.

a. Transient Protection

Transient protection shall be installed between the radio modem and the field antenna. The transient protection shall be flange mounted in the cabinet and have a minimum transient current of 40 kA for 8 x 20 µs pulse, an insertion loss ≤ 0.1 dB, have an operating frequency in the 900 MHz range, allow throughput energy to be ≤ 220 µJ for 6 kV / 3 kA @ 8/20 µs waveform, have throughput voltage ≤ 144 Vpk, and turn-on voltage shall be ± 600 volts. The unit impedance shall be 50 Ω.

b. Antennas

The antenna for the radio modem at the system master/local controllers shall be capable of providing a transmission range adequate for communication with all radio modems or repeaters in the system and must be configured as a single omni, single-yagi, or dual-yagi (2 single-yagi antennas on differing alignments) for each radio as described below.

(1) Omni Antennas

All omni antennas shall be capable of producing between 6 dBd and 10 dBd (8.15 dBi and 12.15 dBi) of gain while operating in, and covering the entire 902-930 MHz frequency range. The Voltage Standing Wave Ratio (VSWR) of the omni antenna shall be 1.5: 1 or less when the antenna coax feed impedance is 50 ohms. Omni antennas shall be fabricated of fiberglass, brass, copper, and/or aluminum and shall be rated for wind velocities of at least 100 mph. The minimum length of the omni antenna shall be 60 in. and it shall be designed and fabricated with a fiberglass radome with a minimum

diameter of 2 in. to prevent ice from collecting directly on the driven element. All omni antennas shall have a cableless N-female connector directly affixed and sealed to the antenna body. All hardware and fastenings devices shall be fabricated from stainless steel.

(2) Yagi / Dual-Yagi Antennas

All yagi antennas shall be capable of producing between 10 dBd and 13 dBd (12.15 dBi and 15.15 dBi) of gain while operating in, and covering the entire 902-930 MHz frequency range. The Voltage Standing Wave Ratio (VSWR) of the omni antenna shall be 1.5: 1 or less when the antenna coax feed impedance is 50 ohms. The front to back ratio must be at least 20 dB for each yagi antenna. Yagi-directional antennas shall be fabricated of either anodized or powder coated 6061/T6 aluminum rod and seamless drawn pipe and shall be rated for wind velocities of at least 100 mph. All yagi antennas shall have a cableless N-female connector directly affixed and sealed to the antenna body. The yagi antenna shall be designed and fabricated so that polarization changes (vertical to horizontal) can be made on the antenna mount without adjusting the mast. Single yagis shall be connected by a low loss N-female "T" splitter/coupler and LMR-400 cable to form dual-yagi systems. All hardware and fastenings devices shall be fabricated from stainless steel.

c. Antennas Cable and Hardware

The coaxial cable used as the transient protection to antenna lead shall have no greater than 3.8 dB loss per 100 ft of length and shall be LMR-400.

All LMR-400 connections are to be stripped, deburred, and crimped using the ST-400-EZ LMR-400 stripping tool, DBT-01 LMR-400 deburring tool, and a 0.429 in. hex crimp die for solderless LMR-400 connections respectively. All connections shall be completely sealed by heat shrinking double walled, adhesive lined shrink tubing for weather proofing and strain relief.

Cables shall be included to interface the radio equipment to the transient protection. The antenna mounting hardware shall securely attach the antenna to the strain pole/cantilever arm. The coaxial cable fitting on the antenna shall not support the weight of the coaxial cable run to the base of the strain pole/cantilever arm.

d. Data Cables

Cables shall be included to interface the radio equipment to the system master, co-located secondary controller, remote secondary controllers and any communication interface panels as needed. Cables shall include strain relief back shells designed to mate and lock with the telemetry connector on the system master and local controllers. All radio equipment and cables shall be delivered preconfigured and ready for field operation.

All miscellaneous equipment necessary to complete the installation shall be as specified by the radio modem manufacturer.

(g) Cabinets

1. Size 3 (G) Cabinet

The size 3 (G) cabinet shall be pedestal-mounted or pole-mounted. As per NEMA TS2-5.3, the TS2 Type-1 G cabinet, at minimum, shall house an 8-load switch bay (configuration 2) terminal and facilities panel and shall have 1 adjustable shelf located 12 in. (305 mm) below the top of the cabinet. The bottom of the cabinet shall be reinforced to ensure a secure pedestal mounting. The G cabinet shall have dimensions of 25 in. (635 mm) wide, 38 in. (965 mm) high, 18 in. (460 mm) deep with a tolerance of + 4 in. (100 mm) in any or all dimensions.

A cabinet slipfitter shall be used to attach the cabinet to the pedestal. The slipfitter shall fit a 4 1/2 in. (114 mm) outside diameter pipe and shall have a minimum of three set screws equally spaced around the slipfitter.

A vent of adequate size shall be provided. The size of the vent and the filter requirements shall be in accordance with the manufacturer's recommendations.

2. Size 5 (M) Cabinet

As per NEMA TS2-5.3, The TS2 type-1 size 5 (M) cabinet, as a minimum, shall house at minimum an 8-load switch bay (configuration 2) terminal and facilities panel and shall have 2 adjustable shelves with the first shelf located 15 in. (380 mm) below the top of the cabinet and the second located 7 in. (180 mm) below the first shelf.

The M cabinet shall be ground-mounted on a concrete foundation at locations and dimensions as shown on the plans.

The M cabinet shall have dimensions of 30 in. (760 mm) wide, 48 in. (1220 mm) high, and 16 in. (410 mm) deep with a tolerance of ± 2 in. (± 50 mm) in any or all dimensions.

Anchor bolts shall be steel in accordance with ASTM A 36 (ASTM A 36M). Diameter of the bolt shall be 1/2 in. (13 mm) or 5/8 in. (16 mm) and the minimum length shall be 15 in. (380 mm) plus a 3 in. (75 mm) right angle hook on the unthreaded end.

The top 6 in. (150 mm) of the bolt shall be threaded with 13 NC threads on 1/2 in. (13 mm) bolts and 11 NC threads on 5/8 in. (16 mm) bolts. The hexagon nut, the flat washer, and the threaded end of the bolt shall be galvanized in accordance with ASTM A 153 or be mechanically galvanized and in accordance with the coating thickness, adherence, and quality requirements of ASTM A 153, class C.

3. Size 6 (P-1) Cabinet

The Size 6 (P-1) cabinet shall be ground mounted on a concrete foundation at locations and dimensions as shown on the plans with anchor bolts in accordance with 922.02(g)2. As per NEMA TS2-5.3, The TS2 type 1 P cabinet, at minimum, shall house a 16 load switch bay (configuration 3) terminal and facilities panel and shall have 2 adjustable shelves with the first shelf located 20 in. (510 mm) below the top of the cabinet and the second located 7 in. (178 mm) below the first shelf a minimum of 30 in. (762 mm) above the bottom of the cabinet, the second located 12 in. (305 mm) above the first shelf.

The cabinet shall be 44 in. (1,120 mm) wide, 52 in. (1,320 mm) high, and 24 in. (610 mm) deep with a tolerance of ± 3 in. (± 75 mm) in any or all dimensions. Maximum exterior dimensions shall be 47 in. (1,195 mm) wide, 63 in. (1,600 mm) high, and 34 in. (860 mm) deep.

4. Size 7 (R) Cabinet

The Size 7 (R) cabinet shall be ground mounted on a c oncrete foundation at locations and di mensions as shown on t he plans with anchor bolts in accordance with 922.02(g)2. As per NEMA TS2-5.3, The TS2 type 1 R cabinet, at minimum, shall house a 16-load switch bay (configuration 3) terminal and facilities panel and s hall have three adjustable shelves with the first shelf located a minimum of 30 i n. (762 mm) above the bottom of the cabinet, the second located 12 i n. (305 mm) above the first shelf and t he third located 8 in. above the second shelf. All shelves shall be adjusted so that the second shelf is located 63 in. ±3 in. (1,600 mm ±75 mm) above the top of the concrete footpad.

The cabinet shall be 44 in. (1,120 mm) wide, 72 i n. (1,830 mm) high, and 24 i n. (610 mm) deep with a tolerance of ± 3 in. (± 75 mm) in any or all dimensions. Maximum exterior dimensions shall be 47 in. (1,195 mm) wide, 83 i n. (2,110 mm) high, and 34 in. (860 mm) deep.

5. Flasher- Two Circuit Alternating Flasher

Two circuit alternating flasher shall be solid state.

a. General

The solid state flasher shall periodically interrupt a source of alternating current line power. Solid state shall mean electrical circuits, the active components of which are semi-conductors, to the exclusion of electromechanical devices or tubes.

The flasher shall be a t ype 3 s olid state flasher conforming to Section 8 of the NEMA Standards Publication TS 1-1983. The flasher output circuit carrying the signal load shall consist of opto or photo isolated solid state power relays and s hall be hard wired to the flasher connector.

Three schematic diagrams and 3 descriptive parts lists shall be furnished with each flasher.

Two circuit alternating flashers shall be plug-in design. The flasher design shall not permit the unit to be inserted improperly into the plug-in base. The flasher shall have heavy-duty plugs and jacks capable of handling the rated load current. The rate of flash shall be 50 to 60 flashes per minute.

The flasher shall operate between 95 volts and 135 v olts AC 60 H ertz. No degradation of performance shall be experienced in environmental changes from -20°F to 165°F (-29°C to 74°C) and 0 to 90% relative humidity.

b. Cabinet Requirements

The cabinet shall be weatherproof and f abricated from cast aluminum or aluminum sheeting with a m inimum thickness of 0.125 in. (3.18 mm). The cabinet door

shall be the entire front of the cabinet and shall be hinged on the right or left side of the cabinet. A Corbin No. 2 lock and 2 No. 2 keys shall be furnished. The lock shall be located near the center of the door on the side opposite the hinge.

Minimum dimensions for the cabinet shall be 12 in. (305 mm) deep, 12 in. (305 mm) wide, and 12 in. (305 mm) high. The maximum dimensions shall be 18 in. (460 mm) deep, 15 in. (380 mm) wide, and 18 in. (460 mm) high.

The cabinet shall have 2 pole plates for stainless steel band mounting of the cabinet on a pole with a minimum diameter of 4 in. (100 mm) and a maximum diameter of 18 in. (460 mm). Two blank cover plates shall be provided. Two hub plates for 1 in. (25 mm) diameter conduit shall be provided with gaskets, 8 bolts at four bolts per plate, nuts, and washers for attaching the hub plates to the cabinet. The cabinet shall be drilled for the mounting of the pole plates or hub plates as shown on the plans.

It shall have a screened vent in the bottom with a minimum size of 1 3/4 sq in. (1,129 mm2), and a minimum of 1 louvered and screened vent towards the top of the cabinet.

The panel in the cabinet shall be capable of being removed and reinstalled with simple hand tools. A 25 amp radio interference filter and surge arrestor wired ahead of a 15 amp circuit breaker shall be mounted on the panel. A terminal block capable of the following electrical connections shall be mounted on the panel.

Circuit 1 - for connection of field signals (Flash circuit 1)
Circuit 2 - for connection of field signals (Flash circuit 2)
Circuit 3 - for connection of field signals (Field Neutral)
AC plus - capable of accepting a No. 6 wire
AC minus - capable of accepting a No. 6 wire
Ground lug - capable of accepting a No. 6 wire

922.03 Signal Head Components

The components shall be in accordance with the Institute of Transportation Engineers for Adjustable Face Vehicular Traffic Control Signal Heads. All new traffic signal and flasher installations that include new indications shall be fitted with LED (Light Emitting Diode) modules. All LED indications shall be selected from the Department's list of approved Traffic Signal Control Equipment.

(a) General

The signal faces shall be sectional in construction, requiring 1 section for each lens and furnished in the nominal size of 12 in. (305 mm). Each section of a face shall have a rectangular silhouette when viewed from the front or the rear.

(b) Housing, Door, and Visor

The top and bottom of each housing shall have an integral locking ring with 72 serrations to permit rotation of the signal housing in 5 degree increments. Hub openings in the top and bottom of the signal housing shall accommodate standard 1 1/2 in. (38 mm) bracket arms. The thickness of the hub at the top and bottom of the housing shall

be a maximum of 1 in. (25 mm) and a minimum of 3/8 in. (10 mm). The 12 in. (305 mm) door shall have 2 simple locking devices. The door on the hinged side shall be attached with hinge pins. Each lens shall have the standard cap type visor. All screws, latching bolts, locking devices, and hinge pins shall be stainless steel.

(c) LED Traffic Signal Indicator

All LED indications shall be selected from the Department's list of approved Traffic Signal Control Equipment.

All LED indications shall have a permanent indelible sticker affixed to the back of the module indicating month and year of initial installation.
lens.

All LED indications provided shall be individually listed on a Parts List indicating the Contract Number, Vendor, Category, Manufacturer, Model, Serial Number and Inventory Number. Hard-copy and electronic copies shall be provided. The electronic document shall be MS Excel (.xls) format and the blank worksheet shall be obtained from the Department's Logistical Support Center.

(d) Wiring

The field wiring leads shall be terminated with screw spade lug type connectors. The LED module wiring leads shall be terminated with 1/4 in. female type connectors for ease of connection to the terminal block.

(e) Section Coupling

Any method to connect 2 or more sections together may be used, if the following requirements are met:

1. *Two or more sections, when jointed together, shall maintain structural integrity when loaded to Institute of Transportation Engineers Standards.*

2. *The opening between joined sections shall accommodate two 1/2 in. (13 mm) cables.*

3. *The maximum length of bolts used to connect sections together shall be 4 in. (100 mm).*

Nuts, bolts, and lock washers shall be galvanized in accordance with ASTM A 153 or be mechanically galvanized and be in accordance with the coating thickness, adherence, and quality requirements of ASTM A 153, class C.

(f) Terminal Block

The yellow section of the 3-section or 2-section signal head and each 1-section signal head shall be equipped with a 5 position terminal block for termination of field wiring. Each section shall have provisions for two 5 position terminal blocks. Each terminal screw shall have a 1/4 in. corresponding spade tab. The terminal block shall have a minimum spacing between screw connections of 1/2 in. (13 mm). The height of the

insulating ridge between screw connections shall be a minimum of 19/32 in. (15 mm) from the base of the terminal blocks.

(g) Material Requirements

1. Polycarbonate Signal Head

The housing, door, and visor of the section shall be made of ultraviolet and heat stabilized polycarbonate. The color shall be permanently molded into the components except the inside surface of the visor shall be painted non-reflecting flat black. The color shall be yellow in accordance with 909.02(b)4.

2. Die-Cast Aluminum Signal Head

The housing, door, and visor of the section shall be made of a die-cast, corrosion resistant, copper free, non-ferrous metal which shall be in accordance with ASTM B 85. All surfaces of the housing, doors, and visor shall receive a prime coat of zinc chromate paint in accordance with 909.02(a) or shall be anodized with a chromate aluminum oxide coating process. The finish shall be highway yellow enamel, 2 coats, oven baked and in accordance with 909.02(b) except the inside surface of the visor shall be painted non-reflecting flat black.

(h) Certification

A material certification shall accompany each order certifying that a signal head from a normal production run within the past 12 months, passed the Institute of Transportation Engineers criteria for breaking strength and deflection. Deflection testing is not required in the certification for polycarbonate signal heads.

922.04 Pedestrian Signal Head

A pedestrian signal shall be 1 section and rectangular in shape. The dimensions of each side may vary from 18 to 19 in. (460 to 485 mm), including the visor and the hinges. The signal shall contain 2 figures with 2 different colored messages. The first figure shall transmit an upraised hand symbol message, and the second figure shall transmit a walking person symbol message. All new installations including new pedestrian indications shall use Light Emitting Diodes. All pedestrian LED indications shall be selected from the Department's list of approved Traffic Signal Control Equipment. The pedestrian signal shall be in accordance with the standard of the Institute of Transportation Engineers for Pedestrian Traffic Control Signal Indications.

(a) Housing, Door, and Visor

The housing shall be equipped with mounting device hardware, such as clamshell, and round openings at top and bottom for mounting with brackets made of iron pipe standard, to fit the 1 1/2 in. (38 mm) pipe. The openings shall have a common vertical centerline through the housing to permit 360° rotation after it is mounted. The openings shall have a serrated ring which permits locking of the housing in 5° increments throughout the entire 360° of rotation. The brackets or the clamshell shall serve as the electrical conduit for the pedestrian signal. The housing shall be made of die-cast, corrosion resistant, copper free, non-ferrous metal which shall be in accordance with ASTM B 85.

The door on the front of the housing may be hinged from any side. The door shall be gasketed to maintain a weather-tight enclosure when secured to the housing. The door and the visor shall be made of the same material as the housing or of polycarbonate. All materials shall be clean, smooth, and free from flaws, cracks, blowholes, or other imperfections.

Each signal shall be provided with a visor.

The exterior of the housing shall be Federal yellow in color. The polycarbonate components shall be black in color, impregnated throughout. The metal components shall be painted with enamel in accordance with 909.02(c).

(b) Message

The upraised hand and walking person symbols shall each be a minimum of 11 in. (280 mm) in height. The width of the upraised hand symbol shall be a minimum of 7 in. (178 mm). The width of the walking person symbol shall be a minimum of 6 in. (150 mm). Message configuration, color, and size shall be in accordance with the standard of the Institute of Traffic Engineers for Pedestrian Traffic Control Signal Indications.

Each pedestrian signal shall be completely wired internally, and ready for connection of the field wiring. A suitable terminal block for connection of the internal wiring and the incoming field wires to the pedestrian signal head shall be provided in the signal housing.

The light source shall be designed and constructed so that if an electrical or mechanical failure occurs, the upraised hand and walking person symbols shall also remain dark.

922.05 Signal Bulbs

All new traffic signal and flasher installations that include new indications shall be fitted with LEDs in accordance with 922.03. The minimum design requirements for replacement light bulbs to be used in a traffic signal face shall be in accordance with the Institute of Transportation Engineers standard for traffic signal bulbs and as follows:

(a) Incandescent Bulbs

1. *Bulbs shall be 67 watt, 116 watt, or 150 watt for different kinds of indications, as specified below.*

INDICATION	*WATTAGE*
9 in. (230 mm) pedestrian	*67*
12 in. (305 mm) pedestrian	*116*
18 in. (455 mm) pedestrian	*116*
12 in. (305 mm) red	*150*
12 in. (305 mm) yellow and green	*116*
12 in. (305 mm) yellow and green arrows	*150*
Optically programmed heads	*150*

All bulbs shall have medium size, brass bases.

2. *Bulbs shall be designed for use in a horizontal position or a base-down position.*

3. *The light center length shall be 2 7/16 in. (62 mm) for 67 watt bulbs and 3 in. (75 mm) for 116 watt and 150 watt bulbs.*

4. *The filament shall be C9 design with a minimum of 7 supports. The 2 voltage supply leads may be counted as 2 of the 7 supports.*

5. *The maximum, overall bulb length for 67 watt and 116 watt bulbs shall be 4 3/8 in. (110 mm) and for 150 watt bulbs shall be 4 3/4 in. (120 mm).*

6. *All bulbs shall be clear and shall be 130 volt.*

7. *The 150 watt bulb shall be P25 or A21 size and shape.*

8. *The 67 watt and 116 watt bulbs shall be A21 size and shape.*

9. *All bulbs shall have 6000 h minimum burning life.*

922.06 Disconnect Hanger Junction Box

Traffic signal disconnect hanger junction boxes shall consist of a span hanger, a balance adjuster, a disconnect hanger clevis, and a housing with a hinged door with a positive latching device. The span hanger, balance adjuster, and all related hardware shall be galvanized in accordance with ASTM A 153 or be mechanically galvanized and conform to the coating thickness, adherence, and quality requirements of ASTM A 153. The housing shall be made of a die-cast, corrosion resistant, copper free, non-ferrous metal which shall be in accordance with ASTM B 85. The balance adjuster fitting shall be made of ferrous or non-ferrous metal. When made of ferrous metal it shall be galvanized in accordance with the requirements for the components and related hardware as set out above.

The disconnect hanger shall be designed so that the maximum allowable space or play between the span hanger and the eye-bolt of the balance adjuster and between the balance adjuster and the disconnect hanger clevis, at points where they are attached to each other by rivet pins or hex head bolts and nuts with lock washers, shall be 0.062 in. (1.6 mm). The span hanger bolt where the eye-bolt or the balance adjuster is attached shall be 5/8 in. (16 mm) diameter.

When serrated locking rings are not integrally cast in the components, the component and locking ring shall be designed so that when the locking ring is placed flush against the component, the component and locking ring shall not rotate or slide when torque is applied. The serrated components shall have 72 serrations to permit rotation of the disconnect hanger clevis, hub plate, or signal head in 5° increments.

There shall be no thread in contact with a wearing surface. Locking rings shall have a minimum thickness of 3/16 in. (4.8 mm) and a maximum thickness of 1/4 in. (6.4 mm) from the base of the ring to the serration peaks. The inside diameter shall be 2 in. (50 mm) and the outside diameter shall be 2 7/8 in. (73 mm).

The terminal block shall have an 18 point terminal block permanently engraved or etched with sequential numbers indicating the circuits. The terminal block shall not have a method of connection which allows a screw point to damage wires when the wires are securely connected. Each point of connection shall accommodate a minimum of four No. 14 gauge (2.0 mm) wires.

The disconnect hanger shall have 2 side entrance holes on opposite sides capable of receiving a 1 1/2 in. (38 mm) plastic or rubber insert to reduce water infiltration. It shall be capable of supporting signal faces in the ambient temperature range of -35 to 120°F (-35 to 49°C) without failure.

The balance adjuster shall have hex head bolts, lock washers, and nuts for securing the main body of the balance adjuster firmly onto and around the eye-bolt to prevent any twisting or turning of the head suspended below it. The span hanger shall have 2 J-bolts, lock washers, and hex head nuts adequate in size to securely fasten the hanger to a messenger cable up to 1/2 in. (13 mm) in diameter.

A type C certification in accordance with 916 shall be provided.

922.07 Free Swinging Signal Support Assemblies

(a) Clearance

The maximum allowable space or play between the hanger assembly and the eyebolt of the balance adjuster and between the balance adjuster and the weatherhead clevis, at points where they are attached to each other by rivet pins or hex head bolts and nuts with lock washers, shall be 0.062 in. (1.6 mm). No bushings or shims will be allowed in this assembly.

(b) Balance Adjuster

The balance adjuster shall consist of a hex head bolt, a lock washer, and nuts for securing the main body of the balance adjuster onto and around the threads of the eye-bolt to prevent any twisting or turning of the adjuster.

(c) Span Hanger

The span hanger, balance adjuster, weatherhead, and all related hardware shall be made of a non-corrosive metal or shall be galvanized in accordance with ASTM A 153 or be mechanically galvanized and conform to the coating thickness, adherence, and quality requirements of ASTM A 153. The weatherhead shall have a minimum of 2 1/2 in. (64 mm) of exposed threads. The weatherhead shall have 2 set screws to fasten the nipple to the weatherhead. If the weatherhead and threaded pipe has a slipin connection, the locking device shall be a double nut assembly. If the weatherhead and threaded pipe has a screw-in connection, the locking device shall be a double set screw assembly.

The span hanger shall be furnished with 2 each of J-bolts, lock washers, and hex head nuts. The J-bolt shall be a minimum of 1/4 in. (6.4 mm) diameter and shall have sufficient threads to be able to secure the hanger to a 1/4 in. (6.4 mm) or to a 1/2 in. (13 mm) span cable.

(d) Tether Bracket

The tether bracket shall attach to a 1/8 in. to 1/4 in. messenger cable and prevent the bottom of the head from moving side-to-side on the cable. Where backplates are installed on the signal heads; the tether bracket shall be of the proper length for the backplate so that the cable is mounted below the bottom of the backplate to avoid interference with head alignment and damage to the backplate.

(e) Pipe Arm Assemblies

The multiple pipe arm assembly shall consist of a span hanger assembly, a balance adjuster, a signal weatherhead, a 2, 3, or 4 way pipe arm, 1 1/2 in. (38 mm) pipe, a lower arm assembly, and all related hardware necessary for a complete assembly.

The 2, 3, or 4 way pipe arms shall have a minimum of 2 in. (50 mm) of exposed thread. Each arm of the pipe arm shall be furnished with two 72 serration locking rings. One locking ring shall have a 3 in. (75 mm) outside diameter and 1 locking ring shall have a 2 3/8 in. (60 mm) outside diameter.

ASSEMBLY	*MAXIMUM ALLOWABLE WEIGHT*
2 Way	*19 lbs (8.6 kg)*
3 Way	*25 lbs (11.3 kg)*
4 Way	*28 lbs (12.7 kg)*

922.08 Mid-Mast Arm Mount Signal Bracket

The bracket shall permit the following 4 adjustments:

(a) rotational adjustment about bracket axis;

(b) vertical adjustment;

(c) rotational adjustment about mast arm; and

(d) rotational adjustment right and left from vertical plane

The bracket shall be fastened to the supporting arm or structure with stainless steel bands. The bracket shall adjust to fit all sizes of round, octagonal, elliptical, or other shape structure without special tools or equipment.

The bracket shall attach to the signal by clamping the signal head both top and bottom and shall be designed to accommodate the specified signal configuration. Each bracket shall be complete with all necessary hardware to attach the traffic signal to the bracket and the bracket to the support.

All electrical wiring shall be concealed within the bracket, except that which runs from the bracket to the mast arm.

Upper and lower arms shall be cast from aluminum in accordance with ASTM B 26 (ASTM B 26M), alloy 713.0-T5 or 356.0-T6. The vertical support tube shall be extruded from aluminum in accordance with to ASTM B 241 (ASTM B 241M), alloy 6063-T6 or 6061-T6, and the strapping to attach the bracket to the arm shall be stainless steel. All steel or malleable iron parts shall be galvanized in accordance with ASTM A 153 or be mechanically galvanized and conform to the coating thickness, adherence, and quality requirements of ASTM A 153, class C.

922.09 Pedestal Poles and Cast Aluminum Pedestal Bases

The pedestal base used for mounting pedestrian signal heads or control cabinets shall be in accordance with 922.09(a). The length of the pedestal pole shall be as shown in the plans.

(a) Cast Aluminum Pedestal Base

A pedestal mounted G cabinet shall have a cast aluminum pedestal base. The cabinet and pedestal base shall be ground mounted on a concrete type A foundation at locations and dimensions as shown on the plans.

The cast aluminum base shall be made of aluminum in accordance with ASTM B 179, alloy ANSI 319.1 or 319.2, or in accordance with ASTM B 26 (ASTM B 26M), alloy ANSI 356.0-T6. The square base shall include an access door and anchor bolts with nuts and washers. The base shall be 13 3/8 in. (8630 mm) square and 15 in. (380 mm) in height ± 1/4 in. (± 6 mm). The weight shall be 22 lbs ± 5% (10.0 kg ± 2.2 kg).

The base shall be designed to support a 150 lbs (68 kg) axial load and 11 ft2 (1.0 m2) of signal head area rigidly mounted. For design purposes, the distance from the bottom of the base to the center of the signal head area is 18 ft (5.5 m). In addition to the dead load, the base shall be designed to withstand wind and ice loads on the specified signal head area and on all surfaces of the support, in accordance with the AASHTO Standard Specification for Structural Supports for Highway Signs, Luminaires and Traffic Signals. Wind speeds used for design shall be based on a 10 year mean recurrence interval and a wind drag coefficient of 1.2 or as shown in the plans. The base shall contain an access door, which is 8 in. by 8 1/4 in. ± 1/4 in. (200 mm by 210 mm ± 6 mm) with a stainless steel hex head bolt for attaching the door.

The base shall be attached to a foundation by four anchor bolts, with an anchor bolt circle of 12 3/4 in. (324 mm). Slotted lugs shall be integrally cast into the four corners of the base for attachment of the anchor bolts. The anchor bolts shall be steel in accordance to ASTM A 36 (ASTM A 36M). The diameter of the anchor bolt shall be 3/4 in. (19 mm) with a minimum length of 18 in. ± 1/2 in. (460 mm ± 13 mm), plus 2 1/2 to 3 in. (64 to 75 mm) right angle hook on the unthreaded end. The top 4 in. (100 mm) of the bolt shall be threaded with 10 NC threads. The threads, plus 3 in. (75 mm), shall be coated after fabrication in accordance with ASTM A 153 or be mechanically galvanized and in accordance with the coating thickness, adherence, and quality requirements of ASTM A 153, class C. Each anchor bolt shall be provided with 2 hex head nuts in

accordance with ASTM A 325 (ASTM A 325M) and 3 washers. Two of the washers shall have a minimum 2 in. (50 mm) and maximum 2 1/8 in. (54 mm) outside diameter and be in accordance to ANSI B 27, Type B regular series and 1 shall be a nominal 3/4 in. (19 mm) series W washer, in accordance with ASTM F 436 (ASTM F 436M).

The cast aluminum pedestal base shall be in accordance with the dimensions and requirements shown in the plans. The casting shall be true to pattern in form and dimensions; free from pouring faults, sponginess, cracks, and blowholes; and free from other defects in positions affecting the strength and value of the intended use for the casting. The base shall not have sharp unfilleted angles or corners. The surface shall have a workmanlike finish.

The door and bolt for the door shall be interchangeable on cast bases from the same manufacturer.

(b) Pedestal Pole

The top of the base shall accommodate a pole having a 4 1/2 in. (114 mm) outside diameter. The threads inside the top of the base shall be 4 in. (100 mm) national standard pipe threads. The pole shall be either a steel pedestal pole or an aluminum pedestal pole.

A steel pedestal pole shall be a seamless schedule 40 carbon steel pipe in accordance with ASTM A 53, grade B. The pole shall have an outside diameter of 4 1/2 in. (114 mm). The pole shall weigh approximately 10.8 lbs/ft (16 kg/m). The length of the pole shall be as shown on the plans. The pole shall have full depth national standard pipe threads on 1 end of the pole. The length of threads shall be 2 1/2 in. (64 mm). The pole shall be galvanized, after threading, in accordance with ASTM A 123. The threads shall be cleaned of all excess galvanizing and protected by a suitable shield.

An aluminum pedestal pole shall be in accordance with ASTM B 241 (ASTM B 241M) for seamless aluminum alloy, schedule 40, 6061-T6. The outside diameter of the pole shall be 4 1/2 in. (114 mm). The length of the pole shall be as shown on the plans. The pole shall weigh approximately 3.7 lbs/ft (5.5 kg/m). The pole shall have full depth national standard pipe threads on 1 end of the pole. The length of threads shall be 2 1/2 in. (64 mm) and protected by a suitable shield. The pole shall have a spun finish.

(c) Pole Cap

A pole cap shall be supplied for the top of the pole if the pole is used for the mounting of pedestrian signal faces or side mounted signal control cabinets. The pole cap shall be either a cast pole cap of aluminum or a pole cap of spun aluminum.

A cast pole cap shall be made of aluminum, in accordance with ASTM B 179, alloy ANSI 319.1 or 319.2. The cap shall fit freely on the 4 1/2 in. (114 mm) outside diameter pole. A set screw using a 3/4 in. (19 mm) No. 12 hex head machine screw shall be supplied to hold the cap on the pole. A standard foundry draft will be allowed on the casting.

A pole cap made from spun aluminum shall be in accordance with ASTM B 209 (ASTM B 209M), alloy 1100-0. The cap shall fit tightly when placed on the end of the pole.

922.10 Signal Supports

(a) Steel Strain Pole

The steel strain pole shall be an anchor base type pole and shall include a handhole and a pole top or cap. The poles shall be furnished in lengths specified.

The pole shall have a reinforced handhole within 18 in. (460 mm) of the base. The handhole minimum size shall be 5 in. (130 mm) by 8 in. (200 mm) with a cover and latching device. The pole shall have a top or cap with a set screw that can be removed with small hand tools.

The pole material shall be in accordance with ASTM A 595 or A 572 with a minimum yield strength of 50,000 psi (345 kPa). The pole shall be galvanized after fabrication in accordance with ASTM A 123.

All hardware, handhole cover and latching device, band type steel polebands, steel bolts, nuts, and washers shall be galvanized in accordance with ASTM A 153 or be mechanically galvanized and conform to the coating thickness, adherence, and quality requirements of ASTM A 153, class C. All nuts and bolts, except anchor bolts, shall be in accordance with ASTM A 307. If a cast pole top or cap is used it shall be in accordance with ASTM A 126 and shall be galvanized with a minimum coating of 2 oz/sq ft (0.610 kg/m^2).

The polebands shall fit the pole as planned. The wire rope shall not be in contact with any 90° edges or with any threads on the band. The pole band material shall be in accordance with ASTM A 572, grade 50 (ASTM A 572M, grade 345); ASTM A 606; or ASTM A 36 (ASTM A 36M) with minimum yield of 50,000 psi (345 kPa). The minimum width of the bands shall be 3 in. (75 mm) and the bands shall be capable of supporting the pole design load. Each half of the band shall be stamped with the corresponding size number.

All welding shall be in accordance with 711.32. Welds shall generate the full strength of the shaft. Only longitudinal continuous welding shall be permitted on the pole shaft. Contacting joint surfaces shall be thoroughly cleaned before fabrication then completely sealed by means of welding. Working drawings shall be submitted in accordance with 105.02.

The pipe coupling for the weatherhead and base plate shall be installed prior to galvanizing. The threads shall be cleaned of all excess galvanizing. An internal J-hook shall be installed near the top of the pole for wire support.

The steel strain pole shall be capable of supporting a 8,000 lb (35.6 kN) load applied horizontally 18 in. (460 mm) below the top of the pole with a maximum allowable

deflection of 0.16 in. (4.1 mm) per 100 lb (445 N) of load. The pole shall be tapered 0.14 in. per foot (12 mm per meter) of length.

A 1 piece base plate shall be secured to the base of the pole and shall develop the full strength of the pole. The base plate material shall be in accordance with ASTM A 36 (ASTM A 36M), A 572 (A 572M), or A 588 (A 588M). The base plate shall have four holes of adequate size to accommodate 2 1/4 in. (57 mm) anchor bolts. The bolt circle shall have a 22 in. (560 mm) diameter and bolt square of 15 1/2 in. (394 mm).

Four high strength steel anchor bolts, 2 1/4 in. (57 mm) diameter and 96 in. (2,400 mm) long, including the hook, shall be furnished with each pole. Each bolt shall have 2 hex nuts and 2 washers in accordance with ASTM A 307, grade A. The anchor bolt material shall be in accordance with ASTM A 576 or ASTM A 675 (ASTM A 675M) with a minimum yield strength of 55,000 psi (379 kPa) or ASTM A 36 (ASTM A 36M), special quality, modified to 55,000 psi (379 kPa) or approved equal. The threaded end of the anchor bolt shall have 12 in. (305 mm) of 4 1/2 NC threads and shall be galvanized the length of the threads, plus 3 in. (75 mm). The threaded end shall be coated after fabrication in accordance with ASTM A 153 or be mechanically galvanized and be in accordance with the coating thickness, adherence, and quality requirements of ASTM A 153, class C. The unthreaded end of the anchor bolt shall have a standard L bend for a distance of 9 in. (230 mm) from the centerline of the anchor bolt to the end of the L. In lieu of the standard bend a steel plate 4 1/2 sq in. (2,900 mm^2) and 1 1/4 in. (32 mm) thick may be welded to the embedded end of the anchor bolt.

(b) Wood Strain Pole

Wood strain poles shall be made from southern yellow pine and shall be in accordance with the current ANSI Specifications and Dimensions for Wood Poles No. 05.1. They shall be of the length and class specified.

All poles shall be full length pressure treated by the full cell process in accordance with current specifications as set forth in the AWPA Standards C1 and C4, using preservative as outlined in standard P5 and set forth in 911.02(h).

Treatment, handling, and storage methods shall be in accordance with the current AWPA Standards.

(c) Signal Cantilever Structures

1. General

A signal cantilever structure shall be designed in accordance with AASHTO Standard Specifications for Structural Supports for Highway Signs, Luminaires, and Traffic Signals, except where modified herein.

Where the manufacturer has wind tunnel test data, they may use drag coefficients based on actual tests. Otherwise, the manufacturer shall use the drag coefficients in Table 1.2.5c.

2. Signal Support

The traffic signal pole and mast arm shall be designed to support the loads in accordance with the plans in a 80 mph (129 km/h) wind with gusts to 104 mph (167 km/h). Loading shall assume die-cast aluminum heads.

The traffic signal pole and mast arm shall be designed to provide a 17 ft (5.3 m) minimum clearance at all signals. Clearance shall be the vertical distance from the lowest point of the signal combination to a horizontal plane 3 in. (75 mm) below the base of the mast arm pole or from the lowest point of the signal combination to the pavement surface below the signal combination, whichever governs. Adjustment of the clearance at the installation site shall be by raising or lowering the mast arm along the upper length of the pole. After the pole is anchored to the foundation, the pole design shall permit the mast arm to be rotated 90° in either direction and secured. The cable inlet shall not be obstructed when a field rotation or vertical adjustment of the mast arm is made.

There shall be no threads in the wearing surface plane at the point of connection between the clevis clamp and the signal face assembly. The clevis clamp shall have a 11/16 in. (18 mm) diameter bolt hole to receive the signal face assembly.

3. Combination Signal-Luminaire Support

All requirements for a signal support shall apply to a combination signal-luminaire support.

The minimum design load of the luminaire shall be 53 lbs (24 kg) with a projected surface area subject to wind loading of 2.4 sq ft (0.223 m^2). If heavier or larger luminaires are used, their actual values shall be used. The required luminaire mounting height shall be in accordance with the plans. Mounting height shall be defined as the vertical distance from the lowest point of the luminaire to the horizontal plane that passes through the base of the pole.

The maximum percentage of allowable stress shall be 80% of the AASHTO Standard Specifications for Group I loads. Vibration dampers shall be furnished as recommended by the manufacturer.

4. Pole Requirements

a. General

The pole shall be a round or multi-sided tapered tube, except the upper 4 to 6 ft (1.2 to 1.8 m) of a signal support pole may be non-tapered. The signal support pole shall have a reinforced handhole 4 in. (100 mm) by 6 in. (150 mm) minimum complete with cover and latching device located 18 in. (460 mm) above the base. A 1/2 in. (13 mm) 13 NC threaded grounding nut or approved equivalent shall be provided and be accessible through the handhole. The pole cap shall be secured in place with setscrews. The combination signal-luminaire pole shall have a reinforced handhole 4 in. (100 mm) by 8 in. (200 mm) minimum complete with cover and latching device, located 18 in. (460 mm) above the base. The combination signal-luminaire pole shall be provided with a removable pole cap and integral wire support hook for the luminaire electrical cable. The cable shall be attached to the hook by a service drop clamp. A wiring hole with a

1 in. (25 mm) to 1 1/2 in. (38 mm) inside diameter grommet shall be provided where the luminaire mast arm attaches to the pole.

b. Deflection

The maximum allowable horizontal deflection of the pole under maximum loading conditions shall not exceed a deflection angle of 1° 10" from the vertical axis of the pole for any 1 ft (305 mm) section of the pole along the entire length of the pole.

c. Materials

The signal pole and the combination signal-luminaire pole shall be steel or aluminum. Steel poles shall be in accordance with ASTM A 595 or A 572 with a minimum yield strength of 50,000 lbs (345 kPa) and shall be galvanized in accordance with ASTM A 123. Aluminum poles shall be in accordance with ASTM B 221 (ASTM B 221M) alloy 6063-T6 or 6005-T5, or ASTM B 241 (ASTM B 241M), alloy 6063-T6.

d. Hardware

All hardware for steel poles except bolts for the mast arm clamps and anchor bolts shall be in accordance with ASTM A 307 and shall be galvanized in accordance with ASTM A 153 or be mechanically galvanized and conform to coating thickness, adherence, and quality requirements of ASTM A 153, class C. A cast pole cap shall be in accordance with ASTM A 126 and shall be galvanized with a minimum coating of 2 oz/sq ft (0.610 kg/m^2).

All hardware for aluminum poles shall be stainless steel in accordance with ASTM A 276, type 304 or type 305.

e. Anchor Base

A 1 piece anchor base shall be secured to the lower end of the pole and shall develop the full strength of the pole. The base shall be provided with 4 holes of adequate size to accommodate 1 1/4 in. (32 mm) anchor bolts equally spaced on a bolt circle of 15 in. (380 mm) diameter and shall have 4 tapped holes for attaching the bolt covers. Four removable bolt covers shall be provided with each base and each cover shall attach to the upright portion of the body of the base by means of 1 hex head cap screw. The steel for the anchor base shall be in accordance with ASTM A 36 (ASTM A 36M), A 572 (A 572M), or A 588 (ASTM A 588M). Aluminum for the anchor base shall be in accordance with ASTM B 26, alloy 356.0-T6 or 356.0-T7 or ASTM B 209, alloy 6061-T6.

f. Arm Requirements

(1) Signal Cantilever Arm

A signal cantilever arm shall be attached to the pole by circular clamps. One-half of the clamp shall be welded to the cantilever arm. The single member arm or the upper tapered member of the truss style arm shall have a cable inlet adjacent to the clamp complete with grommet. The cable inlet shall be a 1 3/4 in. (44 mm) diameter hole with a 1 1/2 in. (38 mm) inside diameter rubber grommet. The 20, 25, and 30 ft (6.1, 7.6 and 9.2 m) cantilever arms shall have 1 intermediate cable inlet with grommet located 12 ft (3.7 m) from the free end of the arm. The 35 and 40 ft (10.7 and 12.2 m) cantilever arm shall have 2 intermediate cable inlets with grommets located 12 ft (3.6 m) and 24 ft (7.3

m) respectively from the free end of the arm. The intermediate cable inlet shall be 1 in. (25 mm) diameter hole with 3/4 in. (19 mm) inside diameter rubber grommet.

The maximum rise of the single member arm shall be 1/2 in. (13 mm) per 1 ft (305 mm) of arm after loading. The maximum rise of the truss style arm shall be as set out in the table. The rise shall be measured vertically from the centerline of the free end of the truss to a plane through the centerline of the upper arm bracket after loading.

Mast Arm Length ft (m)	*Total Rise ft - in. (m)*	*Tolerance in. (mm)*
12 - 20 (3.7 - 6.1)	*4-0 (1.2)*	*±1 (±25)*
25 (7.6)	*4-3 (1.3)*	*±1 (±25)*
30 - 40 (9.2 - 12.2)	*4-7 (1.4)*	*±1 (±25)*

The end signals on the truss style arms shall be suspended and the intermediate signals shall be rigidly attached. All signals on the single member arms shall be rigidly attached as shown on the plans. The cantilever arms shall be used as an enclosed raceway for wiring and shall be free of burrs and rough edges.

Both parts of the clamp for the single member arms shall be stamped with the arm length prior to galvanizing.

(2) Luminaire Mast Arm for Combination Support

The luminaire mast arm shall be in accordance with 922.01(a)1.

(3) Materials

The signal cantilever arm shall be of the same material as the pole. The luminaire mast arm shall be of the same material as the pole except that a truss type arm shall be in accordance with 922.01(a). Bolts for the mast arm clamp shall be stainless steel in accordance with ASTM A 276, type 304 or 305.

g. Anchor Bolts

Four steel anchor bolts, each fitted with 2 hex nuts and 2 flat washers, shall be furnished with each pole. The anchor bolt shall be 1 1/4 in. (32 mm) in diameter with a minimum of 10 in. (254 mm) of 7 NC threads on the upper end. The threads, nuts, and washers shall be galvanized in accordance with ASTM A 153 or be mechanically galvanized and conform to the coating thickness, adherence, and quality requirements of ASTM A 153, class C. The anchor bolt shall be 48 in. (1,220 mm) long with a 4 in. (100 mm) right angle bend on the lower end or a square steel washer, 6 in. by 6 in. by 1/2 in. (150 mm by 150 mm by 13 mm), with a hex nut welded onto the lower end. The steel for the bolt shall be in accordance with ASTM A 576 or ASTM A 675 (ASTM A 675M), with a minimum yield strength of 55,000 psi (379 kPa), or ASTM A 36 (ASTM A 36M), special quality, modified to 55,000 psi (379 kPa) or approved equal.

h. Finish

All steel material shall be fully galvanized. Galvanizing shall take place after all welding is accomplished. Aluminum poles shall be provided with a satin finish

accomplished by mechanical rotary grinding and aluminum mast arms shall be provided with a satin etched finish.

i. Certification

Unless otherwise specified, all materials covered herein shall be covered by a type C certification in accordance with 916.

j. Working Drawings

Working drawings and design calculations shall be submitted in accordance with 105.02.

k. Downguys, Anchors, Rods, and Guards

Pole anchors shall be 8 way expanding with a minimum area of 135 in.2 (87 100 mm2) when expanded or a 10 in. (250 mm) diameter screw anchor. They shall have a minimum holding strength of 10,000 lb (44.5 kN). They shall be painted and in accordance with ASTM A 569 (ASTM A 569M). Anchor rods for expanded anchors shall be 3/4 in. (19 mm) diameter steel and for screw anchors shall be 1 1/4 in. (32 mm) diameter steel, 8 ft (2.4 m) long, in accordance with ASTM A 659 (ASTM A 659M), and be galvanized in accordance with ASTM A 153.

Guy guards shall be made of 18 gauge galvanized steel, polyethylene, polyvinylchloride, or melamine phenolic, and shall be 7 ft (2.1 m) long. The steel guy guard shall have a tight gripping, non-scarring hook for quick attachment to the guy wire. The bottom shall have a clamp that fits over the anchor rod and securely grips by tightening the bolt. Steel guy guards shall be in accordance with ASTM A 659 (ASTM A 659M). The nonmetallic guy guard shall be a helical pigtail which shall resist upward movement, a lock strap to secure the lower end, and a guy guard sleeve. Non-metallic guy guards shall be gray or yellow.

l. Messenger Cable

Messenger cable shall be zinc-coated steel wire strand, contain 7 wires, and have a nominal diameter of 3/8 in. (10 mm). The cable shall be in accordance with ASTM A 475, Siemens-Martin Grade.

m. Span, Catenary, and Downguy Cable

Span, catenary, and downguy cable, shall be aircraft cable for non-aircraft use, and shall be 3/8 in. (10 mm) nominal diameter, made of stainless steel wire, and consist of 7, 19 wire flexible steel strands. The 3/8 in. (10 mm) cable shall have a minimum breaking strength of 12,000 lb (53.4 kN). It shall be in accordance with Military Specifications MIL-W-83420D.

n. Tether and Support Cable

Tether and support cable shall be aircraft cable, for non-aircraft use, and shall be 3/16 in. (5 mm) nominal diameter, made of stainless steel wire, and consist of 7, 7-wire flexible steel strands. The 3/16 in. (5 mm) cable shall have a minimum breaking strength of 3700 lbs (16.5 kN). It shall be in accordance with Military Specifications MIL-83420D.

o. Cable Hardware

(1) Messenger Hangers

Messenger hangers shall be either a 3 bolt clamp or a 3/8 in. (10 mm) by 1 3/4 in. (44 mm) steel hanger with a 90 degree bend extending from the pole 3 3/4 in. (95 mm). The hanger shall have a curved groove and clamp capable of receiving a 5/16 in. to 1/2 in. (8 mm to 13 mm) cable.

The messenger shall be clamped by two 1/2 in. (13 mm) high carbon steel bolts. The angle hanger shall be mounted with a 5/8 in. (16 mm) through bolt and a 1/2 in. (13 mm) lag screw. The 3 bolt clamp shall be mounted with a 5/8 in. (16 mm) through bolt. The angle hanger shall be in accordance with ASTM A 575. The bolts shall be in accordance with NEMA PH 23.

(2) Cable Ring

Cable rings shall be galvanized steel in accordance with IMSA 51-1.

(3) Clamps

Clamps shall be made of 3/8 in. (10 mm) steel and in accordance with ASTM A 575.

Two bolt clamps shall be a minimum of 3 3/4 in. (95 mm) long and 1 1/4 in. (32 mm) wide with two 1/2 in. (13 mm) bolts which shall clamp cable of 1/8 to 1/2 in. (3 to 13 mm) diameter.

Three bolt clamps shall be a minimum of 6 in. (150 mm) long and 1 5/8 in. (42 mm) wide with three 5/8 in. (16 mm) bolts which shall clamp cable of 5/16 to 1/2 in. (8 mm to 13 mm) diameter.

The bolt heads shall be large enough to provide maximum clamping area and shall have oval shoulders to prevent the bolts from turning while tightening. The bolts shall be in accordance with NEMA PH 23.

(4) Servi-Sleeves

Servi-sleeves shall be 1 1/4 to 2 1/4 in. (32 mm to 57 mm) in length and shall hold the size of the cable specified. The sleeves shall be in accordance with ASTM A 659 (ASTM A 659M).

(5) Straight Eye-Bolts

Straight eye-bolts shall be 19 mm (3/4 in.) diameter drop forged steel, a minimum of 14 in. (356 mm) long, and have 6 in. (150 mm) of thread. The steel washers shall be 2 1/4 in. (57 mm) by 2 1/4 in. (57 mm) by 3/16 in. (5 mm) in size with a 13/16 in. (21 mm) hole in the center. All parts shall be in accordance with ASTM A 575 and shall be galvanized in accordance with ASTM A 123.

(6) Hub-Eyes

Hub-eyes shall be made of drop forged steel and in accordance with ASTM A 575. They shall receive a 3/4 in. (19 mm) mounting bolt and have a full rounded thimble eye for protection of the guy cable.

922.11 Signal Cable

(a) Hook-up Wire

Signal hook-up wire shall be stranded 1 conductor wire, type THW 7 strand No. 14 AWG, with a thermoplastic sheath 3/64 in. (1.19 mm) thick and a 600 volt rating. Insulation shall be color coded, as required, and labeled with gauge, voltage rating, and insulation type.

(b) Signal Control Cable

Signal control cable shall be in accordance with IMSA 19-1 or 20-1 and shall be stranded No. 14 AWG wire.

(c) Service Cable

Traffic signal service cable shall be color coded, stranded copper No. 8 AWG wire, 3 conductor cable, type THWN.

922.12 Signal Interconnect

(a) Integral Messenger Interconnect Cable

Integral aerial interconnect cable shall be figure "8" self-supporting type cable consisting of a messenger cable and 7 conductors No. 14 AWG signal cable in accordance with IMSA 20-3.

(b) 6 Pair/19 Telemetry Cable

6 pair telemetry cable shall contain 6 twisted pairs of 19 gauge conductors and shall be in accordance with IMSA 40-2 for underground application and IMSA 40-4, integral messenger, for aerial application.

(c) Fiber Optic Interconnect Cable

Fiber optic cable shall contain 6 stranded multimode, graded index, optic fibers with a minimum of 1 non-metallic central strength member. The cable shall be loose tube, all dielectric construction, suitable for outdoor use in conduit or on aerial supports.

Each individual fiber shall be 62.5/125 µm diameter, core/clad, and each fiber shall be individually encased in its own gel-filled color-coded buffer. The fiber optic cable shall be constructed with Kevlar braid and outer polyethylene jackets as a minimum. If an inner jacket is used it shall be PVC. Maximum attenuation of the cable shall be 4.0 dB/km nominal, measured at room temperature at 850 nm. The bandwidth shall not be less than 160 MHz/km, also at 850 nm. Each fiber shall be continuous with no factory splices except for joining standard length cables to form longer, continuous jacketed cable to fit installation requirements. The cable shall have standard nylon rip cords. Kevlar rip cords will not be accepted. The cable shall be in accordance with the generic requirements for optical fiber and optical fiber cable per Bellcore Technical Reference TR-TSY-000020.

The exterior of the polyethylene outer cable jacket shall be stenciled so that every fifth meter on each reel is marked with a number. The fifth meter of each reel shall be marked with a 5, the tenth meter marked with a 10, and so on until the end of the reel. The stencil shall be applied to the outer jacket using permanent ink and shall be permanently engraved into the jacket to provide long lasting readability.

922.13 Detection Wire and Sealant

(a) Loop Detector Lead-in Cable

Runs 700 ft (213 m) and less of loop detector lead-in cable shall be in accordance with IMSA 50-2 and shall be stranded 2 conductor No. 16 AWG, 19 strands of No. 29 wire. Runs greater than 700 ft (213 m) shall use 14 AWG wire.

The nominal capacitance between conductors shall be 57 pF/ft (187 pF/m) and 98 pF/ft (322 pF/m) between 1 conductor and the other conductor connected to the shield.

(b) Roadway Loop Wire

Roadway loop wire shall be 14 AWG gauge IMSA 51-7 duct-loop wire with polyvinyl chloride or polyethylene outer jacket of 1/4 in. (6.3 mm) diameter.

(c) Preformed Pave-Over Loops

All components of preformed pave-over loops designed for HMA paved-over application shall have a minimum temperature rating exceeding the maximum temperature range for class B HMA mixtures in accordance with 402.07 (300 degrees Fahrenheit (150 degrees Celsius). Preformed pave-over loops shall be selected from the Department's list of approved Traffic Signal Control Equipment.

The size of a preformed pave-over loop shall be 6 ft (1.83 m) diameter, 18.9 ft (5.75 m) circumference round or 6 ft (1.83 m) octagonal, 20.0 ft (6.1 m) perimeter. The loops placed in the same lane shall be spaced 15 ft (4.57 m) from the center of 1 loop to the center of the next loop.

Preformed pave-over loops may be constructed as a single loop or as 2, 3 or 4 loops in series. Each individual loop shall be wired with 4 turns of wire unless otherwise specified. Loops constructed in a series shall also be wired in series.

922.14 Ground Wire

The ground wire shall be copper wire No. 6, AWG soft-drawn, solid copper in accordance with ASTM B 3.

922.15 Splicing Kit

Splicing kits shall contain a 2 piece, transparent snap-together mold body and include an epoxy and sealing compound contained in a unipak. It shall be capable of insulating and splicing nonshielded cables rated up to 5 kilovolts and multi-conductor cables rated up to 600 volts.

922.16 Ground Rod and Connections

Ground rods shall be 1/2 in. (13 mm) in diameter by 8 ft (2.4 m) long with a machined point and chamfered top. They shall be made of steel with a molecularly bonded outer layer of electrolytically applied copper. A single electrode shall have a maximum resistance to ground of 25 ohms. Single electrodes that do not have resistance to ground of 25 ohm or less shall be augmented by additional electrodes, grids, or plates until resistance to ground of 25 ohms or less is achieved. Resistance shall be measured using a 3-point ground tester using the fall of potential method. Data, graphs, resistance in ohms, date of test, make and model of ground tester, and the individual's initials performing the test shall be recorded and submitted to the District Office. Resistance in ohms shall be tagged at the ground connection.

The finished rod shall be cold-drawn and shall have the following minimum physical properties:

PHYSICAL PROPERTY	*MINIMUM*
Tensile strength	*97,000 psi (668 MPa)*
Yield strength, 0.2% offset	*85,000 psi (58.61 MPa)*
% of elongation	*13 psi (90 kPa)*

The ground rod and wire connection shall be made by a thermo weld process or approved equal. The welding material shall cover and secure the conductor to the rod and shall be porous free.

An acceptable alternate shall be a ground grid connection properly sized and shall consist of a shear head bolt, a "C" shaped body, nest, and wedge. The connector components shall be fabricated from an aluminum-bronze alloy, silicone-bronze alloy, and copper.

922.17 Castings for Handholes

The ring and cover for handholes shall be in accordance with 910.05(b).

922.18 Entrance Switch

The entrance switch shall be a double pole, 50 amp, 120 volt circuit breaker in a NEMA type 3R enclosure. The minimum dimensions of the enclosure shall be: 5 in. (127 mm) wide, 3 3/4 in. (95 mm) deep and 9 1/4 in. (235 mm) height. A 1 in. (25 mm) rain-tight detachable hub shall be supplied in the top of the enclosure. The enclosure shall have knockouts on the sides, bottom and back with diameters of 7/8 in. (22 mm) to 1 3/4 in. (44 mm). The enclosure shall contain the circuit breaker, an insulated solid bar for connection of AC Neutral, a separate lug for attachment of earthground, have provisions for a padlock, and shall be surface mounted.

The enclosure shall be made of galvanized steel with a rust inhibiting treatment and finished in the manufacturer's standard color of baked enamel.

All wire terminations and breaker to buss-bar contact points inside the enclosure shall be coated with an anti-oxidant to prevent oxidizing and corrosion of components.

922.19 Conduit and Fittings

(a) Steel Conduit

Steel conduit, couplings, and elbows shall be galvanized rigid steel conduit in accordance with UL 6. The conduit shall be galvanized by the hot dip method on the interior and exterior surfaces. Conduit threads shall be cut after galvanizing. The conduit shall be supplied with a threaded coupling attached to 1 end and the other threaded end protected by a suitable shield.

The various conduit fittings such as bands, bodies, straps, lock nuts, and threadless connectors, shall be in accordance with Federal Specifications A-A-50553 and shall be galvanized if not stainless steel. Conduit straps shall be 2 hole straps with a minimum thickness of 1/8 in. (3 mm). Conduit lock nuts 3/8 in. to 1 1/2 in. (10 mm to 38 mm) in size shall be made of steel. Other sizes shall be made of either steel or malleable iron. All conduit lock nuts shall be galvanized. Other nuts shall be either stainless steel or galvanized steel.

(b) Polyvinyl Chloride Conduit

PVC conduit shall be schedule 40 in accordance with ASTM D 1785. The PVC conduit fittings shall be in accordance with ASTM D 2466. Each length of pipe shall include a coupling.

922.20 Detector Housing

The entire housing casting shall be made from aluminum alloy in accordance with ANSI 320.

922.21 Certification

Unless otherwise specified, all materials covered herein shall have a type C certification in accordance with 916.

SECTION XV

LOCAL NOISE PERMIT

LOCAL NOISE PERMIT

Description

The following information is provided from the City's ordinance on Noise and the requirement for the Contractor to obtain a Noise Permit from the City in conjunction with this work.

Local Ordinance reads as follows:

14.09.010 Public policy and purpose.

It is declared to be the public policy of the city to prohibit unreasonable, unnecessary, excessive and offensive noise from all sources subject to its police power. Above certain levels noise is detrimental to the health, welfare, safety, comfort, and repose of the citizenry and in the public interest shall be systematically regulated and proscribed by the city. (Ord. 07-16 § 1, 2007: Ord. 73-45 § 1 (part), 1973).

14.09.020 Definitions.

As used in this chapter unless context clearly requires otherwise:
"Baffle" means a device to deflect, check or regulate the flow or passage of sound.
Classification of areas into residential, school, hospital, church, commercial manufacturing and/or business zones for purposes of this chapter shall be as defined in the then existing city zoning ordinance. For purposes of this chapter hospital, school and church zones shall be considered as residential zones.
"Daytime" for nonstationary sources means six a.m. to eleven p.m. and "night time" for nonstationary sources shall mean eleven p.m. to six a.m.; "daytime" for fixed sources shall mean seven a.m. to nine p.m. and "night time" for fixed sources shall mean nine p.m. to seven a.m.
"Emergency work" means work made necessary to restore property to a safe condition following a public calamity or work required to protect persons or property from an imminent exposure to danger or work by private or public utilities when restoring utility service.
"Fixed source" means a machine or device capable of creating a noise level at the property upon which it is regularly located, or upon which it is regularly used, which projects into another property; this includes but is not limited to industrial and commercial process machinery and equipment, pumps, fans, air-conditioning apparatus, refrigeration machines, powered lawn mowers, and chain saws.
"Holidays" means the following six days as observed according to Indiana Code 1-1-9-1: New Year's Day, Memorial Day, Independence Day, Labor Day, Thanksgiving Day and Christmas Day.
"Motor vehicles" means and includes any and all self-propelled vehicles as defined by Indiana Code 9-13-2-105(a).
"Muffler" means any device used upon a motor vehicle whose purpose is the deadening of combustion noises of any engine thereon, or the

deadening of any other motor noises, including but not limited to the noise of exhaust gases, or any other mechanical device for the deadening of the noise and intake gases upon a motor vehicle.

“Noise” means that sound, sound made by people, or combination of sounds, which exceeds the sound pressure level as established by this chapter for a particular sound-producing object, vehicle, residential zone, hospital zone, church zone, school zone, or any other area limited by this chapter.

“Nonstationary source” means a machine or device capable of being moved from place to place for occasional or temporary use at a given location including, but not limited to, motor vehicles, pile drivers and bulldozers.

“Person” means a person, firm, association, co-partnership, joint venture, corporation, or any entity, public or private in nature.

“Pneumatic hammers,” when used in Section 14.09.040, means pneumatic hammers that are driven by compressors with greater than ten horsepower or that use a hose with a diameter greater than three-eighths of an inch.

“Premises” means a place in which a person has right of legal, private occupancy.

“Sound pressure level,” in decibels, means that level measured by a sound pressure level meter using the A-weighted scale as defined in the American National Standard S-1.4-1971.

“Sound pressure level meter” means an instrument including a microphone, an amplifier, an output meter, and frequency weighing networks for the measurement of noise and sound pressure levels in a manner specified by this chapter that the slow meter response of the sound pressure level meter shall be used in order to best determine the average pressure.

(Ord. 07-16 § 2, 2007; Ord. 97-32 §§ 2, 3, 1997; Ord. 73-45 § 1 (part), 1973).

14.09.030 Noises prohibited.

(a) For purposes of this chapter, unreasonable noise shall mean sound that is of a volume, frequency, or pattern that prevents, disrupts, injures, or endangers the health, safety, welfare, prosperity, comfort or repose of reasonable persons of ordinary sensitivities within the city of Bloomington, given the time of day or environment in which the sound is made.

(b) Except as otherwise provided in this chapter, it shall be unlawful for any person to cause or make any unreasonable noise or to allow any unreasonable noise to be caused or made in or on any real or personal property occupied or controlled by that person.

(c) In addition to the foregoing, the following acts are violations of this chapter:

(1) It shall be a violation of this chapter to operate a motor vehicle with an internal combustion, steam or air motor unless the motor vehicle is equipped with a suitable and efficient muffler or baffle. A muffler or baffle shall be considered suitable and efficient, for purposes of

this chapter, when the vehicle does not create unreasonable noise. Except by specific governmental authorization given by the mayor or his or her duly authorized representative, no person while on a public or private highway, street or road shall operate a motor vehicle with the muffler or baffle cut out or removed. No cutout shall be so arranged or connected as to permit its operation or control by the driver of any motor vehicle while in position for driving or by a passenger of any motor vehicle.

(2) Except as used for warning purposes, it shall be a violation of this chapter for any person to use, operate or sound any horn or signaling device on any motor vehicle in any public street or public place in the city for any unreasonable period of time.

(3) It shall be a violation of this chapter to play, use, or operate or allow to be played, used, or operated in any motor vehicle any radio, television, digital media player, loudspeaker, sound amplifier, musical instrument, or any other machine or device for producing or reproducing sound at a volume that is louder than necessary for the convenient hearing of persons who are inside the vehicle within which such device is played, used or operated. Sound that is clearly audible thirty feet or more from the vehicle is prima facie evidence of a violation of this section.

(4) It shall be a violation of this chapter to play, use, operate or allow to be played, used, or operated any radio, television, digital media player, loudspeaker, sound amplifier, musical instrument, or any other machine or device for producing or reproducing sound in such a manner that the sound produced persists continuously or intermittently for a period of at least fifteen minutes and can be heard outside the immediate premises from the location of the emitter by a person with normal hearing. Sound that is clearly audible to a person with normal hearing from any place other than the premises from which the source of the sound is located, when the sound occurs between the hours of nine p.m. and seven a.m., is prima facie evidence of a violation of this section. (Ord. 07-16 § 5, 2007: Ord. 74-9 §§ 1—3, 1974; Ord. 73-45 § 1 (part), 1973).

14.09.040 Exemptions.

The following uses and activities shall be exempt from the provisions of this chapter:

(a) Nonamplified crowd noises resulting from legal activities, between the hours of six a.m. and ten p.m.;

(b) Construction operations for which building permits have been issued or construction operations for which a permit is not required shall be exempt from the noise control ordinance under the following conditions and with the following exceptions:

(1) Such operations that occur after six a.m. and before ten p.m., except on Sundays and holidays, as defined in Section 14.09.020. However, in recognition of the work necessary to prepare and close a site each day, motor vehicles transporting heavy construction equipment

or construction materials to and from construction sites at those times shall be exempt from the time restrictions set forth above.
(2) Because of the loud and unusual sounds, and the ground vibrations associated with pile drivers, steam shovels, pneumatic hammers, and steam or diesel gasoline hoists, the operation of this equipment shall be exempt but only when it occurs between the hours of seven a.m. and eight p.m. or when allowed by special permit.
(3) In order to be exempt, all equipment used in such operations shall be operated with the manufacturer’s mufflers and noise reducing equipment in use and in proper operating condition;
(c) Noises of safety signals, warning devices, and emergency pressure relief valves;
(d) Noises resulting from any authorized emergency, fire or police vehicle when responding to an emergency call, acting in time of emergency or in connection with official police or fire department business;
(e) Noises resulting from emergency work as defined in Section 14.09.020;
(f) Noises made by churches using bells as part of their religious observance and by persons having obtained a permit to use the streets;
(g) Any aircraft operated in conformity with, or pursuant to, federal law, federal air regulations, and air traffic control and instructions and pursuant to and within the duly adopted federal air regulations. Any aircraft operating under technical difficulties in any kind of distress, under emergency orders of air traffic control or being operated pursuant to and subsequent to the declaration of an emergency under federal air regulations is also exempt;
(h) All noises resulting from normal operations of railroad trains are exempt as provided by state or federal law;
(i) Noises resulting from burglar alarms and other warning devices when properly installed, providing the cause for such alarm or warning device sound is investigated and turned off within a reasonable period of time;
(j) Noises resulting from rubbish collection utilizing any mechanical equipment between the hours of five a.m. and ten p.m. only;
(k) Noises associated with equipment or animals lawfully utilized by persons with disabilities to accommodate their disability;
(l) Noises associated with legal consumer fireworks used during the times Indiana Code prohibits regulation by municipalities, which are as follows:
(1) Between the hours of five p.m. and two hours after sunset on June 29th, June 30th, July 1st, July 2nd, July 3rd, July 5th, July 6th, July 7th, July 8th, and July 9th,
(2) Between the hours of ten a.m. and twelve midnight on July 4th, and
(3) Between the hours of ten a.m. on December 31st and one a.m. on January 1st;
(m) Any other noise resulting from activities of a temporary duration permitted by law and for which a permit has been granted by the city of Bloomington in accordance with Section 14.09.050. Regulation of noises emanating from operations under permit shall be according to the

conditions and limits stated on the permit and contained in Section 14.09.050. (Ord. 07-16 § 6, 2007: Ord. 97-32 § 1, 1997; Ord. 73-45 § 1 (part), 1973).

14.09.050 Special permits.

Applications for a permit for relief from the regulations contained in this chapter shall be made in writing to the mayor or his or her duly authorized representative. Any permit granted by the mayor or duly authorized representative must be in writing and shall contain all conditions upon which said permit shall be effective. The mayor, or duly authorized representative may prescribe any reasonable conditions or requirements he or she deems necessary to minimize adverse effects upon the community or the surrounding neighborhood. (Ord. 07-16 § 7, 2007: Ord. 93-50 § 3, 1993; Ord. 75-43 § 1, 1975).

14.09.060 Enforcement.

(a) This chapter shall be enforced by the mayor, or his or her duly authorized representative, the Bloomington police department and/or civil servants, appointed with the approval of the common council.
(b) Each person charged with enforcement of this chapter shall have the power and authority to issue all orders and give notice of violations as are designated under this chapter. Such person, or persons, shall keep complete and accurate records. Nonpolice officers, who seek to enforce the provisions of this chapter, may not stop moving vehicles. (Ord. 07-16 § 9, 2007: Ord. 74-9 § 5, 1974; Ord. 73-45 § 1 (part), 1973).

14.09.070 Violations, penalties and appeals.

(a) Any person charged with violating the provisions of this chapter may, in the discretion of the enforcement officer, be issued an official warning. If an official warning is issued it shall be considered as affording the violator one opportunity to comply with this chapter’s provisions.
(b) Any person violating any of the provisions of this chapter, shall, upon a written finding of violation signed by the enforcement officer, be subject to an initial penalty of fifty dollars. Each day such violation is committed or permitted to continue shall constitute a separate offense. A second violation in any twelve-month period is subject to a fine or penalty of one hundred dollars and subsequent violations within a twelve month period are subject to a fine or penalty of five hundred dollars.
(c) Upon written findings of a violation by the same person for the same offense three times within a consecutive twelve-month period, when such noise is created by the same noise emitter or same type of noise emitter, the noise creating device may be ordered by the enforcement officer to cease being used or operated until it can be brought into compliance with this chapter.

(d) Any person issued a written notice of violation of this chapter shall pay the total amount of the penalty to the city of Bloomington within seven days of such notice, unless such notice is appealed in conformity with subsection (e) of this section.
(e) All appeals from written finding of the enforcement officer must be taken, within seven days, to the board of public works.
(f) All appeals from written findings of the board of public works shall be made to courts of competent jurisdiction within seven days.
(g) Upon failure to appeal an adverse finding or failure to comply with a written order or assessed penalty, the city legal department shall be empowered to take all appropriate action necessary to enforce the written findings of the enforcement officer or of the board of public works. (Ord. 07-16 § 10, 2007: Ord. 93-50 § 5, 1993; Ord. 74-9 §§ 6—8, 1974; Ord. 73-45 § 1 (part), 1973).

Construction Requirements

Permit form follows. Completed form is to be submitted to City Engineering and Contractor shall obtain additional instructions from Owner Representatives.

Method of Measurement

This work will not be measured for payment. The work will be paid in the cost of the items appearing in the Schedule of Pay Items.

END OF SPECIAL PROVISION

CITY OF BLOOMINGTON

NOISE PERMIT

ORGANIZATION _____

ACTIVITY _____

DATE OF EVENT _____ TIME OF EVENT _____

LOCATION OF EVENT _____

COST _____ PURPOSE _____

SOURCE OF NOISE _____

IS MUSIC AMPLIFIED? Yes ____ No ____

WHAT INSTRUMENTS? _____

OTHER INFORMATION _____

_____

CONTACT PERSON _____ PHONE _____

ADDRESS _____

SIGNATURE _____ DATE _____

In accordance with section 14.09.070 of the Bloomington Muncipal Code, I, the designee of the Mayor of the City of Bloomington, hereby waive the City Noise Ordinance for the above-mentioned event with the following conditions:

_____

_____

Vickie Renfrow, Corporation Counsel

_____

Date