CITY OF BLOOMINGTON
DEPARTMENT OF PUBLIC WORKS
2006 SIDEWALK IMPROVEMENTS

MAXWELL LANE
HIGHLAND AVENUE TO SHERIDAN DRIVE

INDEX OF DRAWINGS

A1	TITLE SHEET
B1	GENERAL NOTES, UTILITIES
B2	LEGEND, REFERENCE POINT DATA
D1	TYPICAL PAVEMENT DETAILS
D2	TYPICAL STORM SEWER DETAILS
M1	MAINTENANCE OF TRAFFIC AND EROSION CONTROL PLANS
P1 - P2	PLAN AND PROFILES
S1	STRUCTURE DATA TABLE AND PAVED SIDE DITCH DETAIL
X1 - X5	CROSS SECTIONS

PROJECT AREA

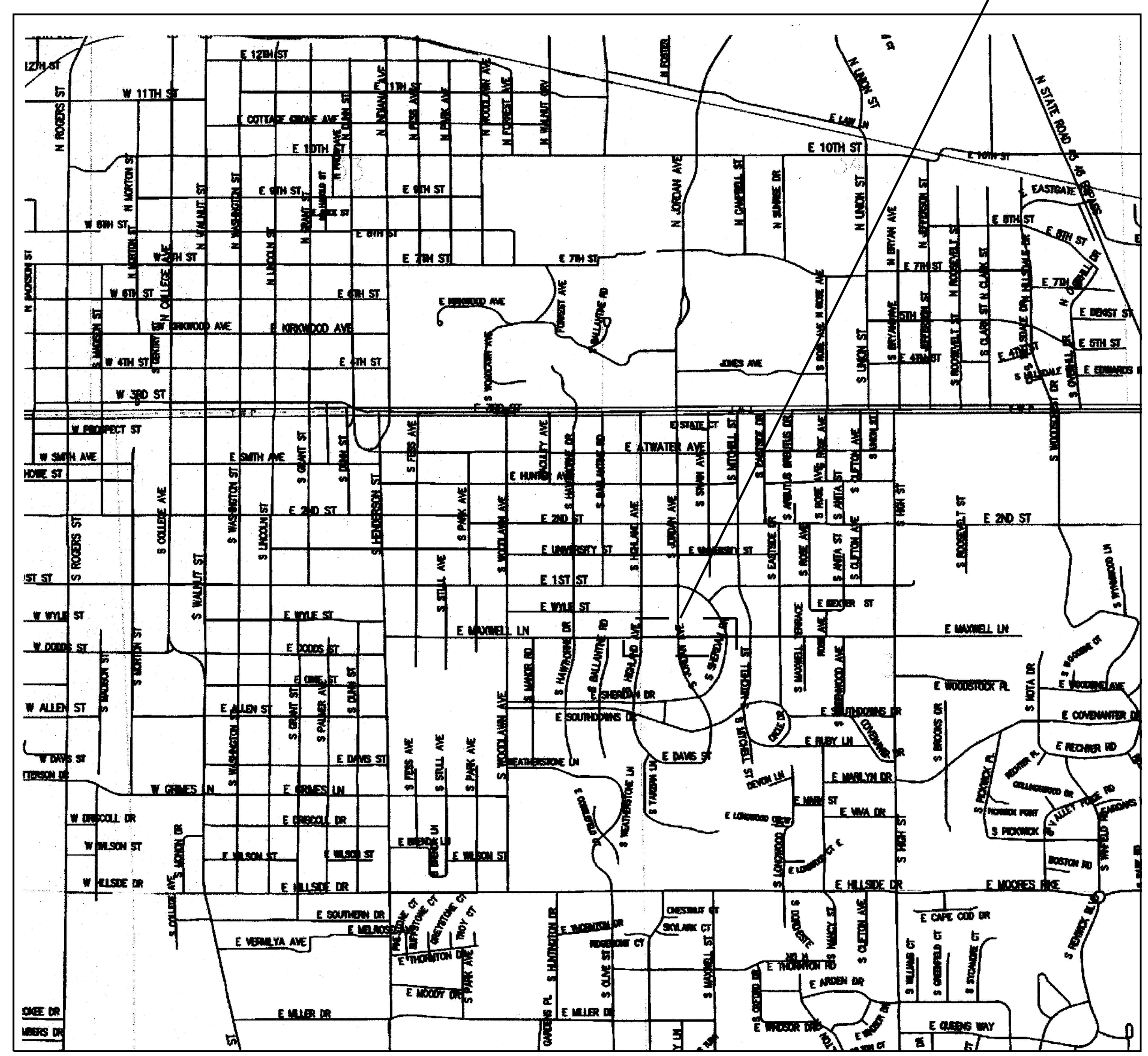

0 2000'

LOCATION MAP

BLOOMINGTON, INDIANA

BROCK RIDGWAY
REGISTERED
No. 19300092
STATE OF INDIANA
PROFESSIONAL ENGINEER

PREPARED BY:

EAGLE RIDGE
CIVIL ENGINEERING SERVICES, LLC

1321 Laurel Oak Drive
Avon, Indiana 46123
(317)370-9672

PROJECT NO.: 005
FILENAME:

REVISIONS	
DATE	DESCRIPTION

CITY OF BLOOMINGTON
DEPT. OF PUBLIC WORKS
2006 SIDEWALK IMPROVEMENTS

MAXWELL LANE

SHEET NO. A1

1/11/2012 9:47:21 PM c:\projects\10005\dgn\A1(Maxwell)\005to01_A1.dgn

UTILITY CONTACTS

CABLE TELEVISION
INSIGHT COMMUNICATIONS
ATTN: SCOTT TEMPLETON
2450 SOUTH HENDERSON ST.
BLOOMINGTON, IN 47401
(812) 332-6332

GAS
VECTREN ENERGY
ATTN: DOUG ANDERSON
205 SOUTH MADISON
BLOOMINGTON, IN 47404
(812) 330-4000
(812) 334-6762

FOR SERVICE RELOCATIONS
(48 HOUR NOTICE NEEDED)
ATTN: MELVIN WILLIAMS
(812) 330-4031

TELEPHONE
AT & T
ATTN: BRENT McCABE
4517 INDIANA BELL COURT
BLOOMINGTON, IN 47408
(812) 334-4521

ELECTRIC
DUKE ENERGY
ATTN: KERRY DUCKER
1100 WEST SECOND ST.
P.O. BOX 2448
BLOOMINGTON, IN 47403
(812) 337-3035

SEWER AND WATER
CITY OF BLOOMINGTON UTILITIES
ATTN: MIKE BENGTSON
1969 SOUTH HENDERSON ST.
BLOOMINGTON, IN 47401
(812) 349-3653

GENERAL NOTES

MAINTENANCE OF TRAFFIC AND ACCESS: THE MAINTENANCE OF TRAFFIC (VEHICULAR AND PEDESTRIAN) AND THE MAINTENANCE OF ACCESS (TO BUSINESSES AND TO RESIDENCES) ARE TO BE PROVIDED AT ALL TIMES AND BE CLEARLY MARKED. ANY INTERRUPTION MUST BE OF VERY SHORT DURATION AND BE COORDINATED WITH THE PROPERTY OWNER AT LEAST 48 HOURS IN ADVANCE.

INCIDENTAL WORK: ALL WORK SHOWN OR SPECIFIED IN THE CONTRACT DOCUMENTS AND OTHER WORK WHICH MAY BE INCIDENTAL TO THE DENOTED WORK SHALL BE CONSIDERED TO BE INCLUDED IN THE TOTAL CONTRACT LUMP SUM PRICE.

SIGNS: CONTRACTOR IS TO CONTACT CITY TRAFFIC DIVISION, DON PORTER AT (812)349-3452 TO HAVE CITY OWNED SIGNS REMOVED PRIOR TO WORK AND RESET AFTER WORK. CONTACT SHALL BE MADE AT LEAST 5 DAYS IN ADVANCE FOR REMOVAL. CONTRACTOR TO COORDINATE WITH CITY TO DETERMINE IF ANY SIGN SLEEVES ARE TO BE INSTALLED IN SIDEWALKS, AND PLACE IF SO DIRECTED.

USE OF INDOT STANDARD SPECIFICATIONS: MATERIALS AND WORKMANSHIP OF THE FOLLOWING WORK SHALL BE AS REQUIRED BY THE INDOT 2006 STANDARD SPECIFICATIONS. THE STANDARD SPECIFICATIONS WILL ALSO APPLY WHERE OTHER STANDARDS ARE NOT SPECIFIED.
BITUMINOUS PAVING SEC. #402
SIDEWALKS SEC. #604
SEEDING AND SODDING SEC. #621
EROSION CONTROL SEC. #205
CONCRETE PAVEMENTS SEC. #501
CURBS SEC. #605

COORDINATION OF DRAWINGS, TECHNICAL SPECIFICATIONS, CONSTRUCTION SPECIFICATIONS AND STANDARD SPECIFICATIONS: THE CONTRACT DOCUMENTS ARE INTENDED TO BE COMPLEMENTARY AND TO DESCRIBE AND PROVIDE FOR COMPLETE WORK. A REQUIREMENT APPEARING IN ONE IS BINDING AS THOUGH OCCURRING IN ALL. IN CASE OF DISCREPANCY, THE FOLLOWING ORDER OF PRECEDENCE WILL APPLY:
1. PERMITS ISSUED BY LOCAL, STATE AND FEDERAL REGULATORY AGENCIES,
2. TECHNICAL SPECIFICATIONS,
3. PROJECT DRAWINGS,
4. CONSTRUCTION SPECIFICATIONS FOR SANITARY, WATER, AND STORM PROJECTS, AS PUBLISHED BY CITY OF BLOOMINGTON UTILITIES (CURRENT EDITION),
5. STANDARD SPECIFICATIONS AS PUBLISHED BY THE INDIANA DEPARTMENT OF TRANSPORTATION, 2006, INCLUDING CURRENT SUPPLEMENTS.

PRESENCE OF UTILITIES: EXISTING UTILITIES SHOWN ON PLANS ARE APPROXIMATED IN ACCORDANCE WITH AVAILABLE RECORDS AND PHYSICAL EVIDENCE. OTHER UTILITIES MAY ALSO BE PRESENT. EXACT LOCATIONS AND ELEVATIONS ARE TO BE DETERMINED BY CONTRACTOR.

USE OF RIGHT OF WAY: CONTRACTOR IS ONLY ALLOWED TO USE THE AREAS SHOWN ON THE PLANS AS "RIGHT OF WAY" DURING CONSTRUCTION. HOWEVER, NO MATERIALS OR EQUIPMENT SHALL BE STORED IN A LOCATION OR MANNER WHICH PRESENTS A HAZARD TO THE PUBLIC OR THE ENVIRONMENT. THE SAFEGUARD OF MATERIALS REMAINING IN THESE AREAS IS THE RESPONSIBILITY OF THE CONTRACTOR. CONTRACTOR SHALL BE RESPONSIBLE FOR OBTAINING RIGHTS FOR ANY ADDITIONAL AREAS NEEDED. CONTRACTOR SHALL STAKE RIGHT OF WAY PRIOR TO COMMENCING WORK IN PROJECT AREA.

CURB RAMPS: ALL CURB RAMPS WILL BE PER INDOT STANDARDS FOR THE DESIGNATED TYPES, AND SHALL INCLUDE A DETECTABLE WARNING SURFACE OF TRUNCATED DOMES IN ACCORDANCE WITH STANDARD SPECIFICATIONS.

UTILITY SERVICE RELOCATIONS: RELOCATION OF WATER MAINS AND WATER SERVICES SHALL BE BY CITY UTILITIES (CBU). RELOCATION OF SANITARY LATERALS WILL BE PERFORMED BY CONTRACTOR. WORK ON SANITARY LATERALS WILL BE IN ACCORDANCE WITH THE CITY UTILITY'S CONSTRUCTION SPECIFICATIONS SECTION 4.5.2.1.5.1. RELOCATION OF OTHER UTILITIES SHALL BE BY THE RESPECTIVE UTILITY UNLESS OTHERWISE NOTED.

PERMITS: CONTRACTOR SHALL BE RESPONSIBLE FOR OBTAINING ANY LOCAL PERMITS TO COMPLETE THE WORK AS SHOWN, INCLUDING, BUT NOT LIMITED TO, THE RESTRICTION OR CLOSURE OF STREETS WHERE NEEDED. CONTRACTOR WILL BE REQUIRED TO OBTAIN ANY STATE OR FEDERAL PERMITS NOT PREVIOUSLY OBTAINED BY THE CITY OR THE ENGINEER OR TO COMPLETE THE APPLICATION OF SUCH PERMITS WHERE THE PERMIT COORDINATION OR APPLICATION IS NOT YET COMPLETE AT THE TIME OF BIDDING.

TREE TRIMMING: UNLESS OTHERWISE NOTED, CONTRACTOR IS TO TRIM TREES TO A HEIGHT OF 8' ABOVE FINISHED SIDEWALK GRADE. CONTRACTOR TO COORDINATE WITH URBAN FORESTER AND USE AN APPROVED TREE SEALANT.

STAKING: CONTRACTOR SHALL BE RESPONSIBLE FOR ALL STAKING.

SIGNS AND PAVEMENT MARKINGS: ALL SIGNS AND MARKINGS SHALL BE AS REQUIRED IN THE INDIANA MANUAL ON UNIFORM TRAFFIC CONTROL DEVICES, CURRENT EDITION.

STORM SEWER STRUCTURE CASTINGS AND FRAMES: SPECIAL NOTE SHALL BE MADE BY THE CONTRACTOR THAT THE CITY OF BLOOMINGTON UTILITIES REQUIRES THE USE OF CASTINGS AND FRAMES BY EAST JORDAN IRON WORKS.

GRADES: ALL SPOT GRADES AND CONTOURS PROVIDED ARE TO SURFACE OF GROUND (PAVEMENT SURFACE, TOP OF CASTING, FINISHED GRADE, ETC.) UNLESS OTHERWISE NOTED.

EXISTING LANDSCAPING IN CITY RIGHT-OF-WAY: CONTRACTOR IS TO GIVE ADJACENT PROPERTY OWNERS 48 HOURS NOTICE PRIOR TO REMOVING PLANTS, STONES OR OTHER LANDSCAPING FEATURES THAT ARE IN THE CITY'S RIGHT-OF-WAY. CONTRACTOR MAY ASSIST OWNER IN RECOVERING ITEMS BY GENTLY PLACING THEM JUST OFF THE RIGHT-OF-WAY (AT THE CONTRACTOR'S RISK), BUT ONLY AFTER COORDINATING WITH PROPERTY OWNER. ITEMS AND PLANTS NOT RECOVERED ARE TO BE REMOVED FROM THE SITE.

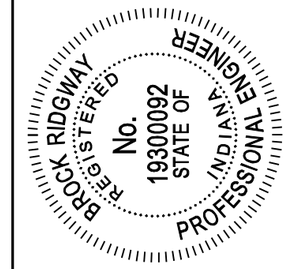

PREPARED BY:
EAGLE RIDGE
CIVIL ENGINEERING SERVICES, LLC
1321 Laurel Oak Drive
Avon, Indiana 46123
(317)370-9672

PROJECT NO.: 005
FILENAME:

REVISIONS	
DATE	DESCRIPTION

CITY OF BLOOMINGTON
DEPT. OF PUBLIC WORKS
2006 SIDEWALK IMPROVEMENTS

GENERAL INFORMATION

SHEET NO. B1

1/11/2012 9:47:26 PM c:\projects\10005\dgn\005to002.dgn

GENERAL LEGEND (EXISTING SCREENED, PROPOSED IN BOLD)

- UTILITY HAND HOLE
- LIGHT POLE
- WATER VALVE
- GAS VALVE
- INLETS
- HYDRANT
- TRAFFIC MANHOLE
- TRANSFORMER BOX
- TREES
- TELEPHONE MANHOLE
- FLAG POLE
- MAILBOX
- SIGN (1 OR 2 POST)
- SIGNAL POLE
- MANHOLE (STORM, SANITARY OR COMBINED)
- STORM SEWER
- SANITARY SEWER
- UNDERGROUND ELECTRIC
- GAS LINE
- UNDERGROUND TELEPHONE
- WATER LINE
- OVERHEAD ELECTRIC
- P.L. — PROPERTY/RIGHT-OF-WAY LINE
- XX.XX — PROPOSED SPOT GRADES
- XXX — PROPOSED CONTOURS
- DITCH FLOW
- FLOW DIRECTION
- D.S. — DOWNSPOUT

- (26) SODDED AREA, NURSERY SOD
- (AD) ASPHALT DRIVE AND PARKING LOT PAVEMENT
- (CD) CONCRETE DRIVE PAVEMENT
- (CG) CURB AND GUTTER
- (CL) PROPOSED CONSTRUCTION LIMITS
- (IC) INTEGRAL CURB AND WALK
- (MS) MULCH SEEDED AREAS
- (P) PAVEMENT PATCHING PER DETAILS
- (S) SIDEWALK, CONCRETE
- (SB) STOP BAR, 24" WIDE WHITE THERMOPLASTIC LINE
- (SC) STANDING CURB
- (SL) APPROXIMATE SANITARY LATERAL (IF IN CONFLICT, CONTRACTOR TO REPLACE)
- (W8) 8" WHITE THERMOPLASTIC LINE FOR CROSSWALKS
- (WS) APPROXIMATE WATER SERVICE (IF IN CONFLICT, CONTACT CBU, CBU WILL REPLACE)
- (H) CURB RAMP (LETTER DESIGNATES INDOT TYPE) PER INDOT STANDARD DRAWINGS
- (+) NEW TREES

MAINTENANCE OF TRAFFIC ITEMS

- INDOT STANDARD DRUM AT 20' SPACING (TYP.), 10' IN TAPERS
- BARRICADE
- WARNING SIGN ON STANDARD

EROSION CONTROL ITEMS

- 4' TALL TEMPORARY CONSTRUCTION FENCING
- SILT FENCING
- (IP) INLET PROTECTION

CONTROL POINTS AND TBM'S SHOWN ON SHEET P1 AND P2

TEMPORARY BENCH MARK:

RAILROAD SPIKE SET IN THE WEST SIDE OF A POWER POLE, 1' UP.
ELEV. = 855.71'

CP #121

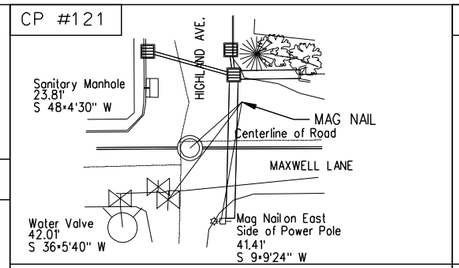

PK NAIL # 121, ELEV. = 816.28
N = 1424448.72, E = 3113157.34

CP #106

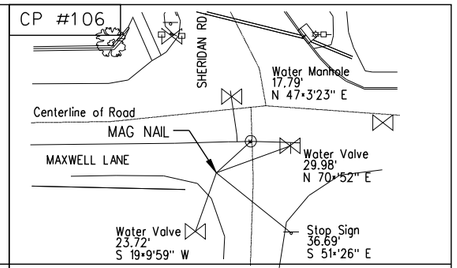

PK NAIL #106, ELEV. = 855.16
N = 1424416.85, E = 3114009.39

REGISTERED BROCK RIDGWAY No. 19300092 STATE OF INDIANA PROFESSIONAL ENGINEER

PREPARED BY:

EAGLE RIDGE
CIVIL ENGINEERING SERVICES, LLC
1321 Laurel Oak Drive
Avon, Indiana 46123
(317)370-9672

PROJECT NO.: 005
FILENAME:

REVISIONS	
DATE	DESCRIPTION

CITY OF BLOOMINGTON
DEPT. OF PUBLIC WORKS
2006 SIDEWALK IMPROVEMENTS

LEGEND, REFERENCE POINT DATA

SHEET NO. B2

1/11/2012 9:47:37 PM c:\projects\10005\dgn\All(Maxwell)\005tc003.A1.dgn

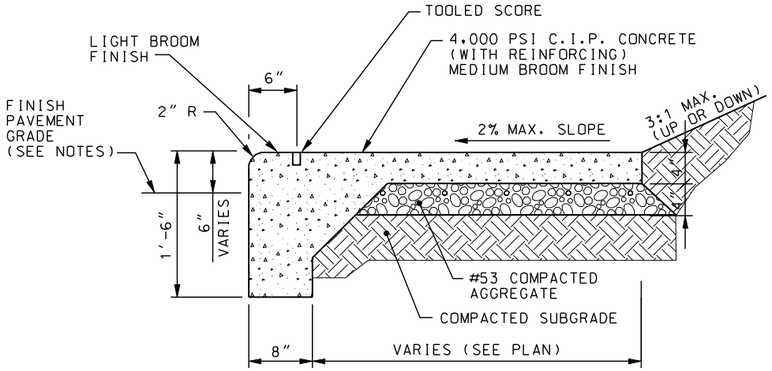

IC INTEGRAL CURB AND WALK

NTS

NOTES:
1. HAND FINISH CURB TO A 6" DEPTH (TYP.)
2. THIS DETAIL TO BE USED WHERE NEW CONCRETE WALKS ARE NEXT TO NEW CURBS.
3. USE IN CONJUNCTION WITH PAVEMENT PATCH DETAIL.

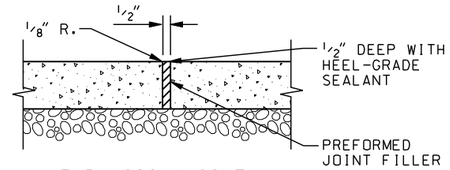

EXPANSION JOINT

EXPANSION JOINT MATERIAL SHALL BE "ZIP-STRIP" EXPANSION MATERIAL WITH REMOVABLE CAP BY GREENSTREAK OR APPROVED EQUAL.

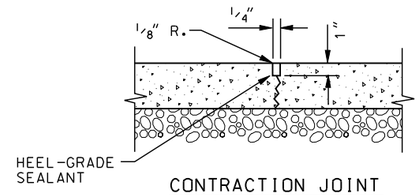

CONTRACTION JOINT

JOINT IN CONCRETE SIDEWALKS

NTS

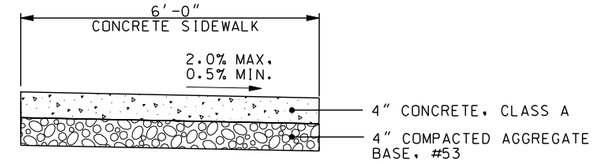

S TYPICAL SIDEWALK DETAIL

NTS

SIDEWALK JOINT NOTES:

1. INSTALL 1/2" PREFORMED JOINT FILLER BETWEEN SIDEWALKS AND ANY OTHER FIXED FEATURES (CURBS, STEPS, RAMPS, BUILDINGS, ETC.)
2. IN EACH SIDEWALK SEGMENT, TOOL CONSTRUCTION JOINTS AT EVEN SPACING BUT NO MORE THAN 6' MAXIMUM APART. INSTALL AN EXPANSION JOINT WITH 1/2" PREFORMED JOINT FILLER AT A MAXIMUM SPACING EVERY 30' IN SIDEWALKS, AND AT EACH SIDEWALK CONNECTION TO OTHER SIDEWALKS, AT CURBS, AND AT RAMPS.

CURB JOINTS NOTE:

1. ALL CURBS SHALL RECEIVE A FULL DEPTH EXPANSION JOINT FORMED WITH 1/2" PREFORMED JOINT FILLER AT THE FOLLOWING LOCATIONS:
   - EVERY EXPANSION JOINT IN ADJACENT SIDEWALKS OR MEDIAN BUFFER STRIP
   - AT EACH RADIUS POINT
   - ON EITHER SIDE OF CURB INLETS OR OTHER CASTINGS
   - AT SAWCUT, LIMITS OF REMOVAL TO ANY EXISTING CURB
   - AT 100' MAXIMUM INTERVALS, IF NO OTHER JOINTS NEEDED
2. CURBS & COMBINED CURB AND GUTTER SHALL RECEIVE A TOOLED CONTRACTION JOINT AT 20' MAXIMUM SPACING.

CURB RAMPS NOTES:

1. RAMPS TO BE CONSTRUCTED AT A MAXIMUM 12:1 SLOPE TO A LANDING AREA FOR ENTRY ONTO ROADWAY PER PLANS.
2. RAMPS ARE TO RECEIVE "TRUNCATED DOMES" PER INDOT STANDARD.

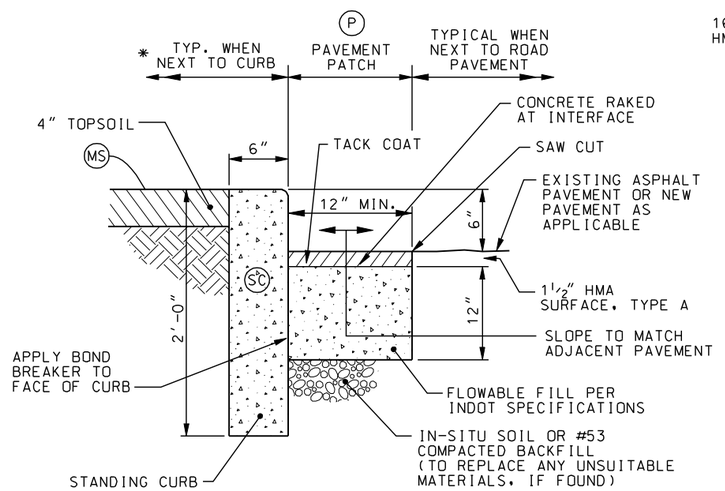

P PAVEMENT PATCH DETAIL

NTS

NOTES:

* 1. THIS AREA IS TO RECEIVE STANDING CURB AND 4" OF TOPSOIL AND MULCHED SEEDING (AS SHOWN ABOVE), OR INTEGRAL CURB AND WALK (DETAILED ELSEWHERE). TREATMENT AS SHOWN ON PLANS.

2. REFER TO CURB JOINTS NOTES FOR CURB JOINTING.
3. PAVEMENT PATCHING MAY NOT BE REQUIRED IF EXISTING PAVEMENT CAN BE REMOVED TO A CLEAN AND STRAIGHT EDGE AT FRONT OF PROPOSED CURB. CITY APPROVAL IS REQUIRED.
4. PAVEMENT PATCHING REQUIRED WHEREVER PAVEMENT IS CUT FOR PIPE WORK, AND WHERE EXISTING PAVEMENT IS DAMAGED TO COMPLETE THE REQUIRED CURB, DRIVE OR SIDEWALK WORK.

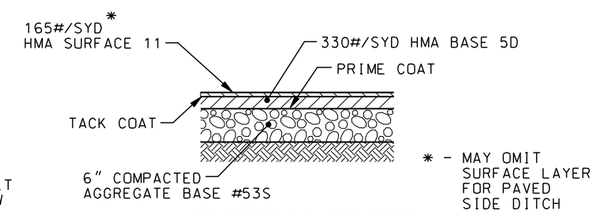

AD PARKING LOT AND ASPHALT DRIVE PAVEMENT

(WHERE NOTED ON PLANS)

NTS

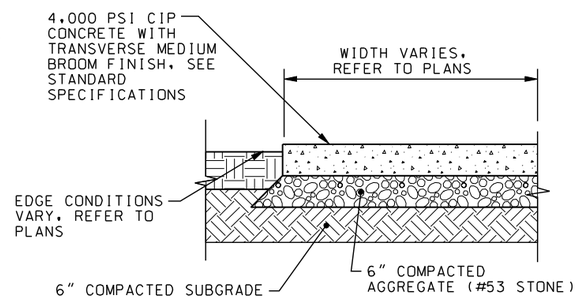

CD 6" CONCRETE PAVEMENT FOR CLASS I DRIVES

(FOR DRIVES AND ALLEYS)

NTS

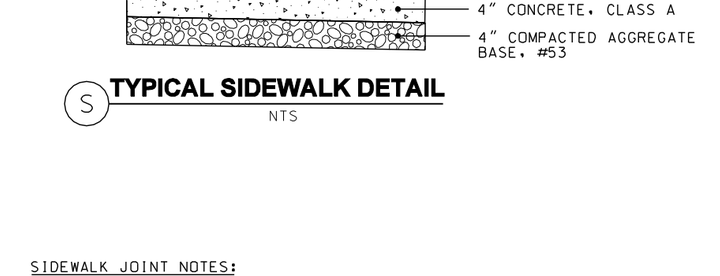

SLEEVE FOR FUTURE SIGN INSTALLATIONS IN SIDEWALKS

NTS

SIGN RELOCATION NOTES:

1. CONTRACTOR WILL COORDINATE WITH CITY TO HAVE EXISTING SIGNS REMOVED AT APPROPRIATE TIMES.
2. CONTRACTOR TO INSTALL PVC INSERTS IN SIDEWALKS AS SHOWN FOR OWNER'S USE IN RELOCATING SIGNS (OWNER TO DESIGNATE LOCATIONS).
3. ALL NEW AND EXISTING SIGNS WILL BE SET BY OWNER IN CONTRACTOR PROVIDED INSERTS UNLESS SHOWN OTHERWISE.
4. SIGN INSERTS WILL BE PLACED AT CONCRETE CONSTRUCTION JOINTS ONLY.

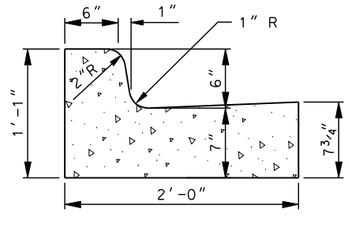

CG COMBINED CURB AND GUTTER DETAIL

NTS

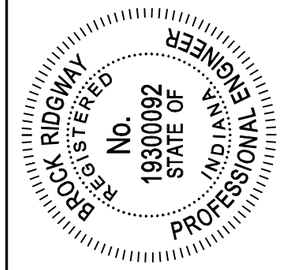

PREPARED BY:
EAGLE RIDGE
CIVIL ENGINEERING SERVICES, LLC
1321 Laurel Oak Drive
Avon, Indiana 46123
(317)370-9672

PROJECT NO.: 005

FILENAME:

REVISIONS	
DATE	DESCRIPTION

CITY OF BLOOMINGTON
DEPT. OF PUBLIC WORKS
2006 SIDEWALK IMPROVEMENTS

TYPICAL PAVEMENT DETAILS

SHEET NO. D1

1/11/2012 9:47:44 PM c:\projects\10005\dgn\005td001.dgn

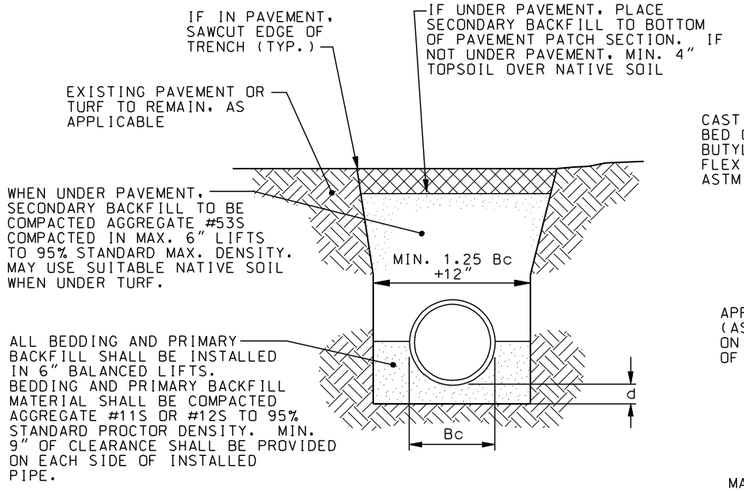

REINFORCED CONCRETE PIPE (RCP) TRENCH DETAIL

NTS

FOR RCP TRENCH DETAIL USE ONLY

DEPTH OF BEDDING MATERIAL BELOW PIPE	
D	(d) MIN.
ON SOIL	4" MIN.
ON ROCK	6" MIN.

LEGEND
Bc = OUTSIDE DIAMETER D = INSIDE DIAMETER d = DEPTH OF BEDDING MATERIAL BELOW PIPE

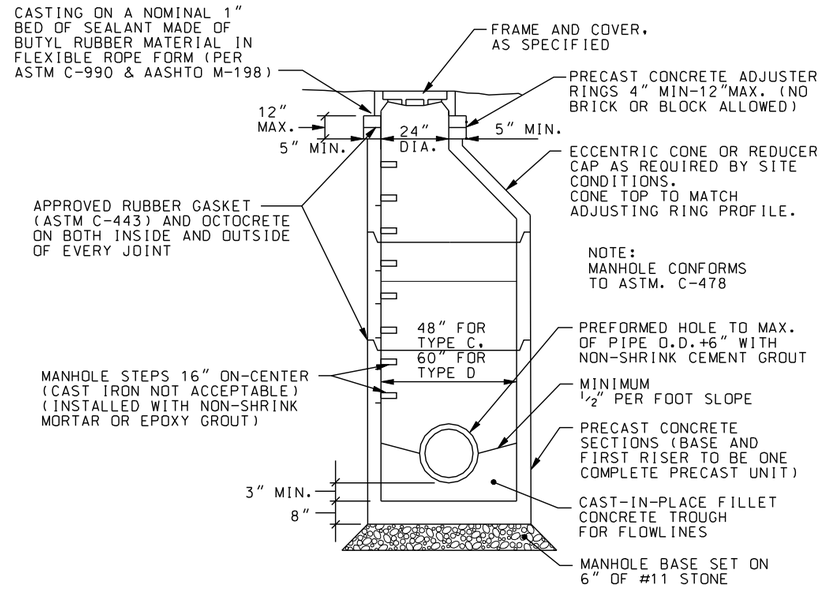

STANDARD STORM MANHOLE

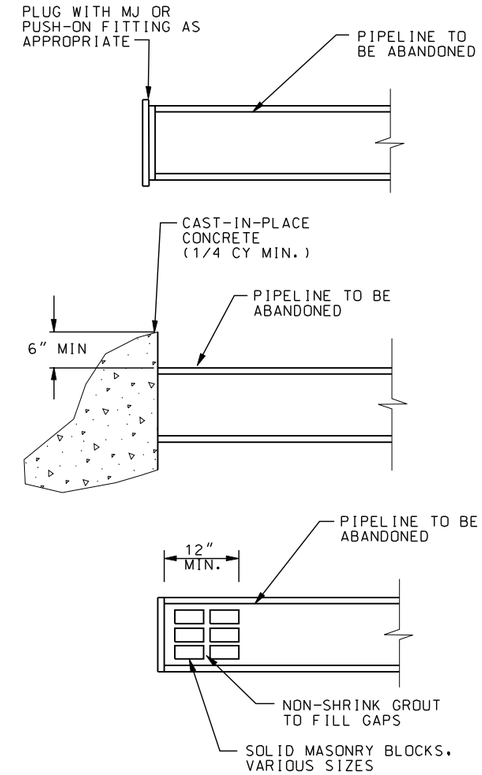

TYPICAL PIPE BULKHEADS

ALL EX. COMBINED SEWER PIPE TO BE ABANDONED IN PLACE ARE TO BE BULKHEADED AT DOWNSTREAM POINT OF ABANDONMENT OR AS SHOWN

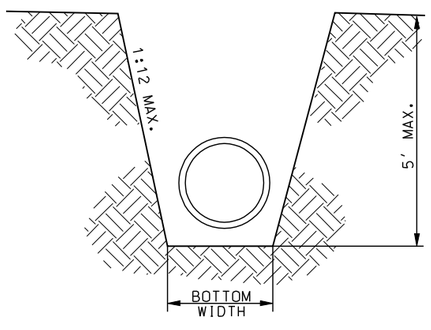

1.25 O.D. + 12" FOR < 42" DIA.
1.25 O.D. + 24" FOR > 42" DIA

MAXIMUM TRENCH WIDTH DETAIL

NO SCALE

5' OR LESS IN DEPTH

DETAIL SHALL BE USED IF EXCAVATIONS ARE LESS THAN 5 FEET IN DEPTH AND EXAMINATION OF THE GROUND BY A COMPETENT PERSON PROVIDES NO INDICATION OF A POTENTIAL CAVE-IN. THE DETERMINATION OF CAVE-IN POTENTIAL SHALL BE THE RESPONSIBILITY OF THE CONTRACTOR. IF CONTRACTOR DETERMINES A POTENTIAL CAVE-IN IS POSSIBLE, TRENCH PROTECTION SHALL BE PROVIDED PER OSHA STANDARDS. OSHA STANDARDS SHALL BE USED IN ALL CASES

SOIL TYPE	X
A	3/4
B	1
C	1 1/2

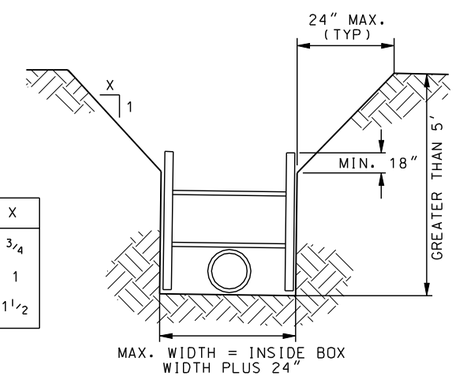

MAXIMUM TRENCH WIDTH DETAIL

NO SCALE

GREATER THAN 5' IN DEPTH

NOTE:
OTHER MEANS OF OSHA-APPROVED TRENCH PROTECTION ARE ACCEPTABLE PROVIDED THE MAXIMUM TRENCH WIDTH OF THIS DETAIL IS ADHERED TO.

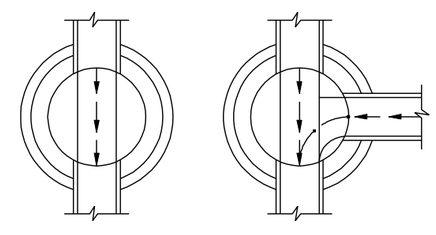

STANDARD MANHOLE BENCHES

STORM SEWER INLETS AND MANHOLES

THESE STRUCTURES SHALL BE IN ACCORDANCE WITH INDOT STANDARD SPECIFICATIONS (STANDARD DRAWING REFERENCED)

INLET R:	E720-INST-07
CASTING 13:	E720-ICCA-13
CASTING 4:	E720-MHCA-02
INLET J:	E720-INST-06
CATCH BASIN K:	E720-CBST-05
CASTING 10:	E720-ICCA-08/09/09A

BROCK RIDGWAY REGISTERED No. 19300092 STATE OF INDIANA PROFESSIONAL ENGINEER

PREPARED BY:
EAGLE RIDGE CIVIL ENGINEERING SERVICES, LLC
1321 Laurel Oak Drive
Avon, Indiana 46123
(317)370-9672

PROJECT NO.: 005
FILENAME:

REVISIONS	
DATE	DESCRIPTION

CITY OF BLOOMINGTON
DEPT. OF PUBLIC WORKS
2006 SIDEWALK IMPROVEMENTS

TYPICAL STORM SEWER DETAILS

SHEET NO. D2

1/11/2012 9:47:53 PM c:\projects\10005\dgn\005td002.dgn

CONSTRUCTION SIGN AND BARRICADE SUMMARY *		
W20-3	ROAD CLOSED 500 FT	1 EA
W1-7	TWO-DIRECTION ARROW	1 EA
R11-2	ROAD CLOSED	2 EA
W5-1	ROAD NARROWS	2 EA
W6-3	TWO-WAY TRAFFIC	2 EA
R9-9	SIDEWALK CLOSED	1 EA

* ESTIMATED ONLY-OTHER SIGNS MAY BE REQUIRED.

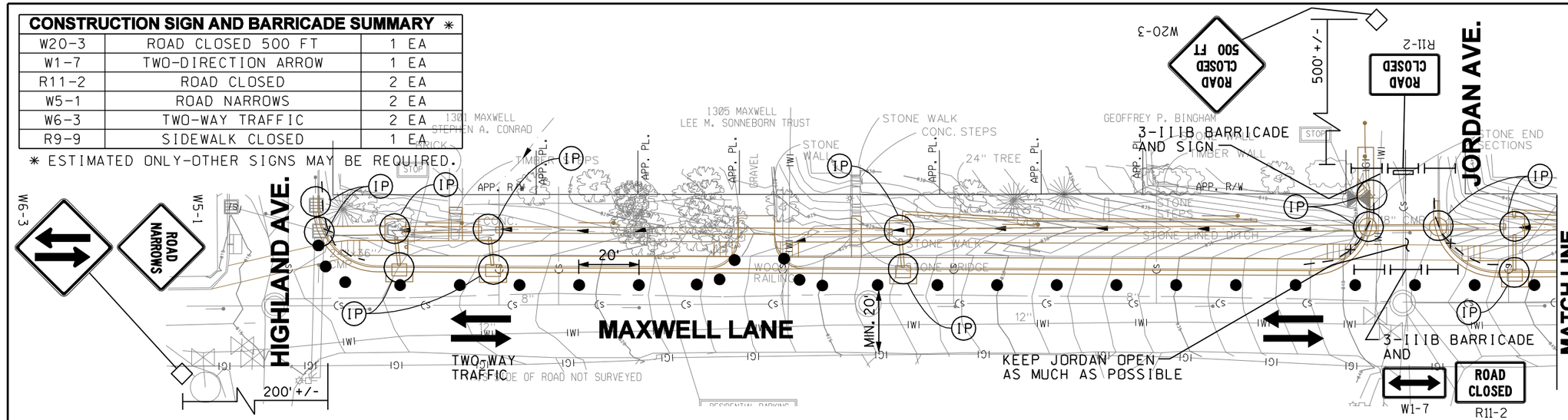

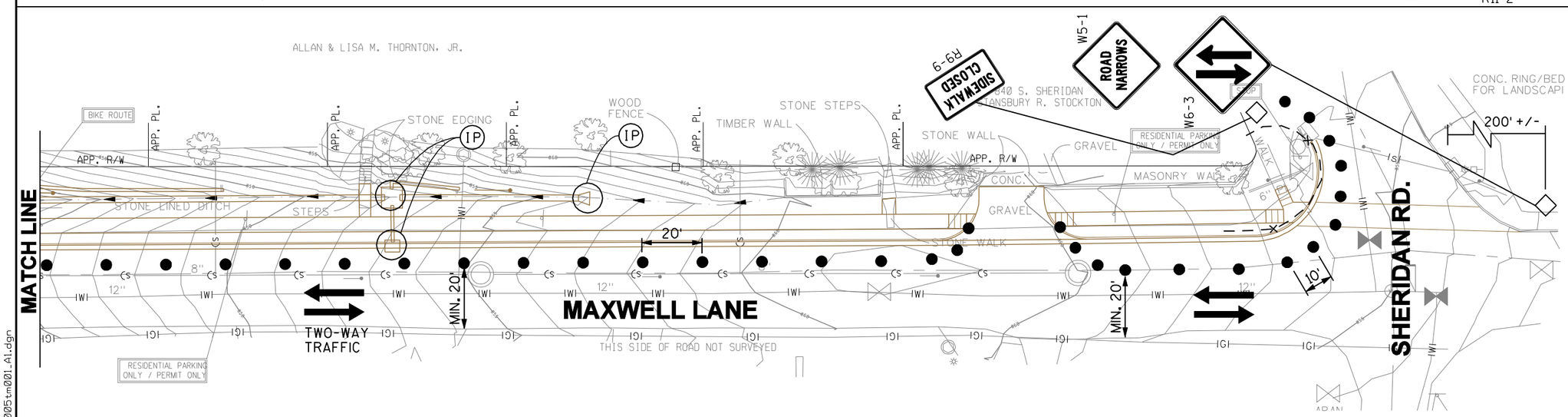

LEGEND

- ● INDOT STANDARD DRUM AT 20' SPACING (TYP.), 10' IN TAPERS
- 4' TALL TEMPORARY CONSTRUCTION FENCING
- SILT FENCING
- (IP) INLET PROTECTION*
- BARRICADE
- ◇ WARNING SIGN ON STANDARD

* INLET PROTECTION SHALL BE IN ACCORDANCE WITH INDOT STANDARD SPECIFICATIONS FOR "GRAVEL RING", "GEOTEXTILE BOX" OR OTHER METHOD APPROVED BY ENGINEER. INLET PROTECTION WILL BE USED UNTIL HMA PAVING IS PERFORMED AROUND STRUCTURE.

MAINTENANCE OF TRAFFIC REQUIREMENTS:

1. ROAD CLOSURESS ON MAXWELL STREET WILL NOT BE PERMITTED. JORDAN AVENUE MAY BE CLOSED, BUT ONLY DURING PIPE INSTALLATION ACTIVITIES.
2. LANE RESTRICTIONS ON MAXWELL STREET WILL BE ALLOWED FOR DRIVE REMOVAL AND SIDEWALK CONSTRUCTION, WITH PRIOR COORDINATION WITH PROPERTY OWNER.
3. FLAGGER OPERATIONS AND TEMPORARY SIGNAGE IN ACCORDANCE WITH INDIANA MANUAL OF UNIFORM TRAFFIC CONTROL DEVICES ARE REQUIRED FOR ALL LANE RESTRICTIONS.
4. ALL WORK MUST BE CONDUCTED SUCH THAT A USABLE ACCESS IS KEPT IN SERVICE TO EACH BUSINESS OR RESIDENCE (INCLUDING UPSTAIRS RESIDENCES). ANY INTERRUPTIONS OF ACCESS WILL BE COORDINATED WITH OWNERS TO OCCUR DURING NON-OPERATING HOURS, IF POSSIBLE. ACCESS WILL BE BY TEMPORARY SIDEWALKS OR RAILED WALKWAYS, IF NECESSARY, IN ACCORDANCE WITH LOCAL, STATE AND FEDERAL CODES.
5. ALL SIGNS TO BE MOUNTED ON STANDARDS.
6. ALL SIGNS IN ACCORDANCE WITH INDOT STANDARDS AND INDIANA MANUAL ON UNIFORM TRAFFIC CONTROL DEVICES.
7. ALL SIGNS, BARRICADES AND DRUMS TO BE MOUNTED WITH A TYPE C (STEADY BURN) WARNING LIGHT AND MAINTAINED DUSK TO DAWN.

EROSION CONTROL REQUIREMENTS:

1. INSTALL EROSION CONTROL MEASURES PRIOR TO ACTIVITIES UPSTREAM/UPSLOPE OF THAT PROTECTION.
2. INSPECT ADJACENT STREETS DAILY. CLEAN PUBLIC STREETS AS NEEDED OF ANY CONSTRUCTION DEBRIS OR SPILLAGE.
3. SEE TECHNICAL SPECIFICATION 01550 "PROTECTION OF ENVIRONMENT" FOR ADDITIONAL REQUIREMENTS.

0 40'

REGISTERED BROCK RIDGWAY No. 19300092 STATE OF INDIANA PROFESSIONAL ENGINEER

PREPARED BY:

EAGLE RIDGE
CIVIL ENGINEERING SERVICES, LLC
1321 Laurel Oak Drive
Avon, Indiana 46123
(317)370-9672

PROJECT NO.: 005
FILENAME:

REVISIONS	
DATE	DESCRIPTION

CITY OF BLOOMINGTON
DEPT. OF PUBLIC WORKS
2006 SIDEWALK IMPROVEMENTS

MAINTENANCE OF TRAFFIC AND EROSION CONTROL PLAN

SHEET NO. M1

1/11/2012 9:48:10 PM c:\projects\10005\dgn\Alt(Maxwell)\005tm001_A1.dgn

SANITARY SERVICE LATERAL:
SANITARY LATERALS SHOWN ARE APPROXIMATED FROM CITY GIS MAPPING. LOCATIONS ARE NOT CONFIRMED. CONTRACTOR IS REQUIRED TO REPLACE ANY LATERALS FOUND TO BE IN CONFLICT WITH NEW STORM SEWERS IN ACCORDANCE WITH CBU SPECIFICATIONS.

SIGN NOTE:
CONTRACTOR TO COORDINATE WITH CITY REGARDING SIGN RELOCATIONS NEEDED ON THIS STREET.

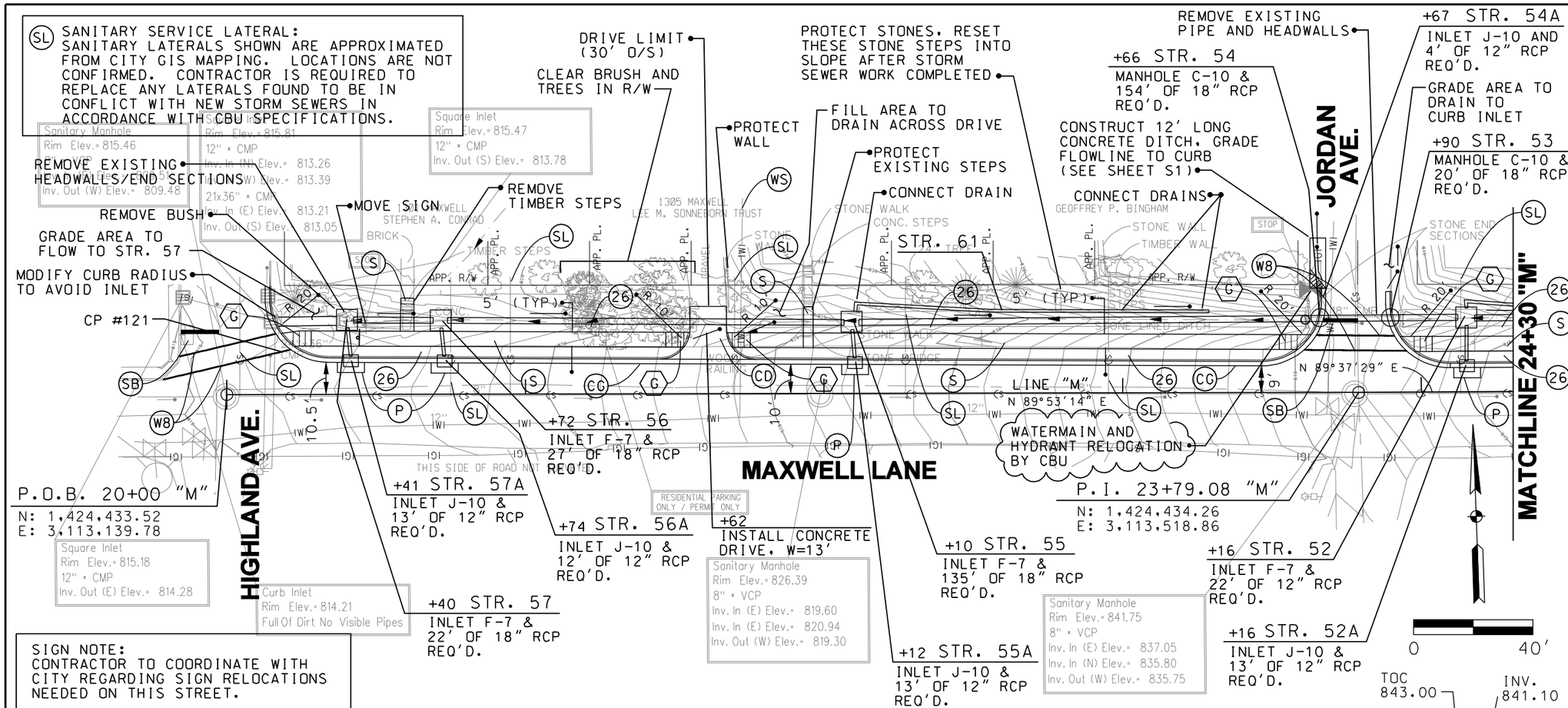

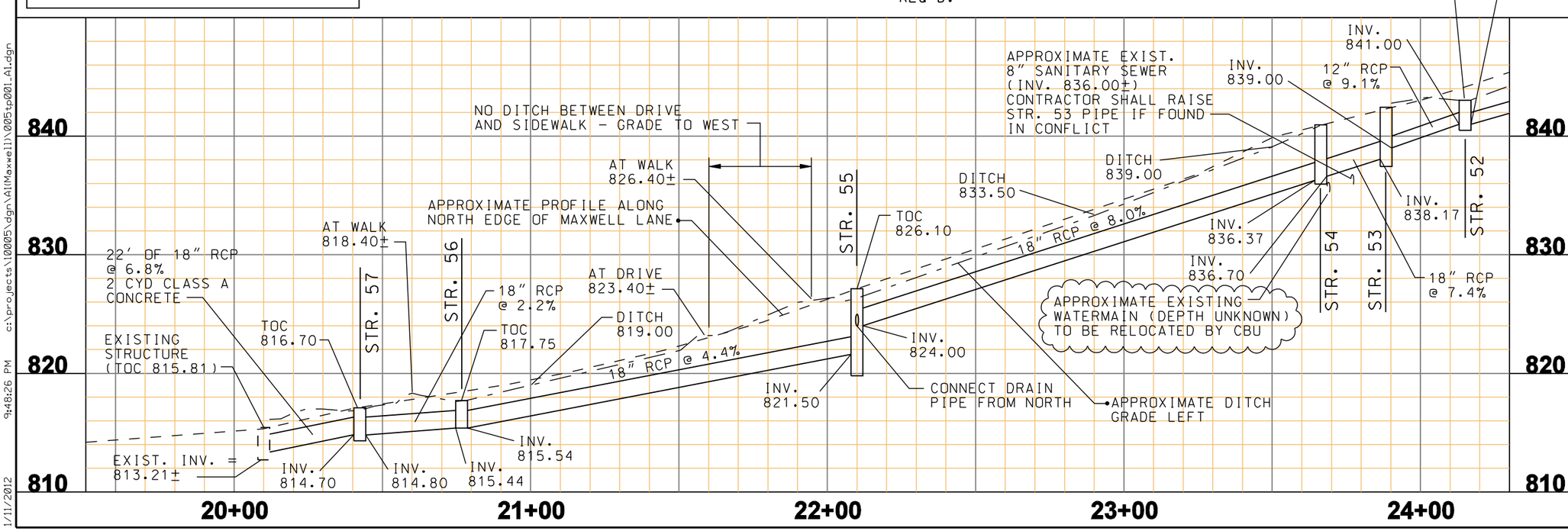

c:\projects\10005\dgn\A1(Maxwell)\005tp001.A1.dgn
9:48:26 PM
1/11/2012

REGISTERED BROCK RIDGWAY No. 19300092 STATE OF INDIANA PROFESSIONAL ENGINEER

PREPARED BY:

EAGLE RIDGE
CIVIL ENGINEERING SERVICES, LLC
1321 Laurel Oak Drive
Avon, Indiana 46123
(317)370-9672

PROJECT NO.: 005
FILENAME:

REVISIONS	
DATE	DESCRIPTION

CITY OF BLOOMINGTON
DEPT. OF PUBLIC WORKS
2006 SIDEWALK IMPROVEMENTS

PLAN AND PROFILE

SHEET NO. P1

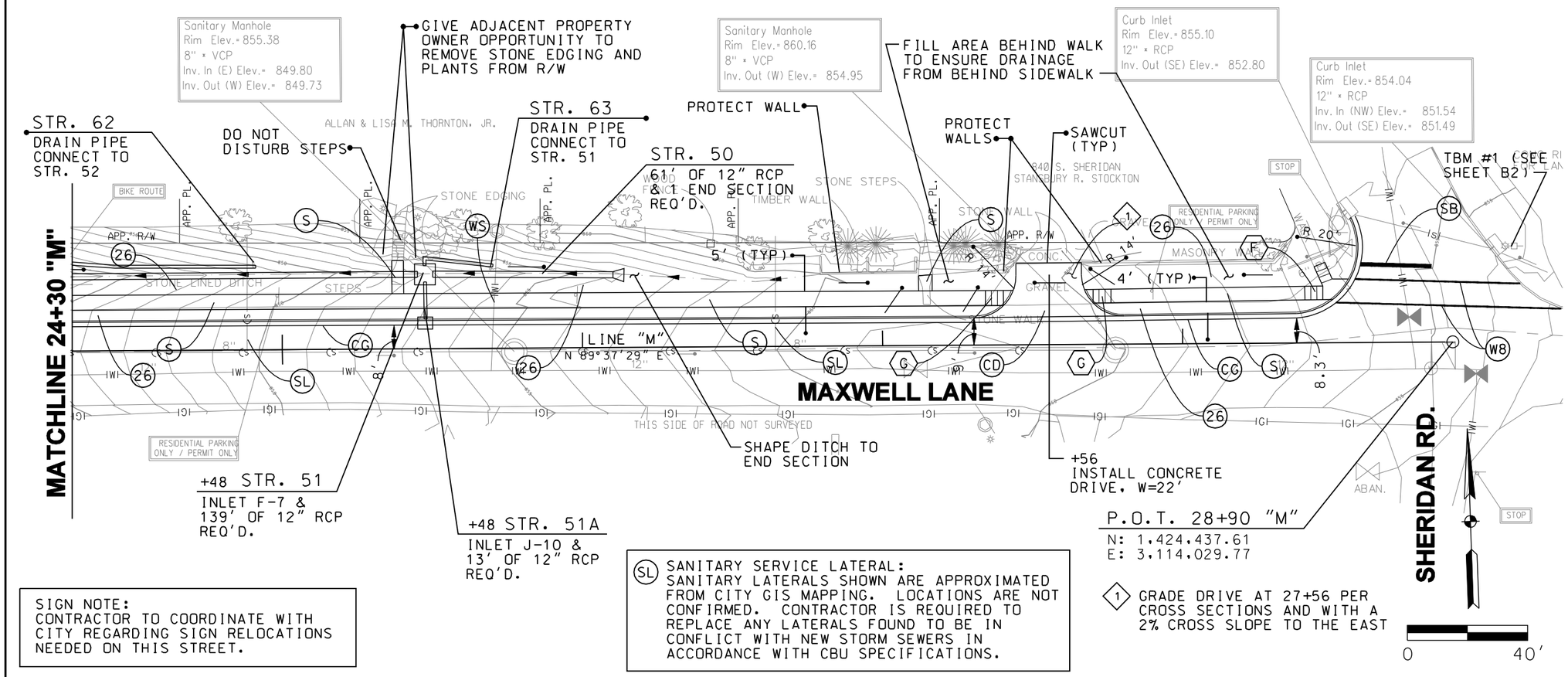

SIGN NOTE:
CONTRACTOR TO COORDINATE WITH CITY REGARDING SIGN RELOCATIONS NEEDED ON THIS STREET.

(SL) SANITARY SERVICE LATERAL:
SANITARY LATERALS SHOWN ARE APPROXIMATED FROM CITY GIS MAPPING. LOCATIONS ARE NOT CONFIRMED. CONTRACTOR IS REQUIRED TO REPLACE ANY LATERALS FOUND TO BE IN CONFLICT WITH NEW STORM SEWERS IN ACCORDANCE WITH CBU SPECIFICATIONS.

(1) GRADE DRIVE AT 27+56 PER CROSS SECTIONS AND WITH A 2% CROSS SLOPE TO THE EAST

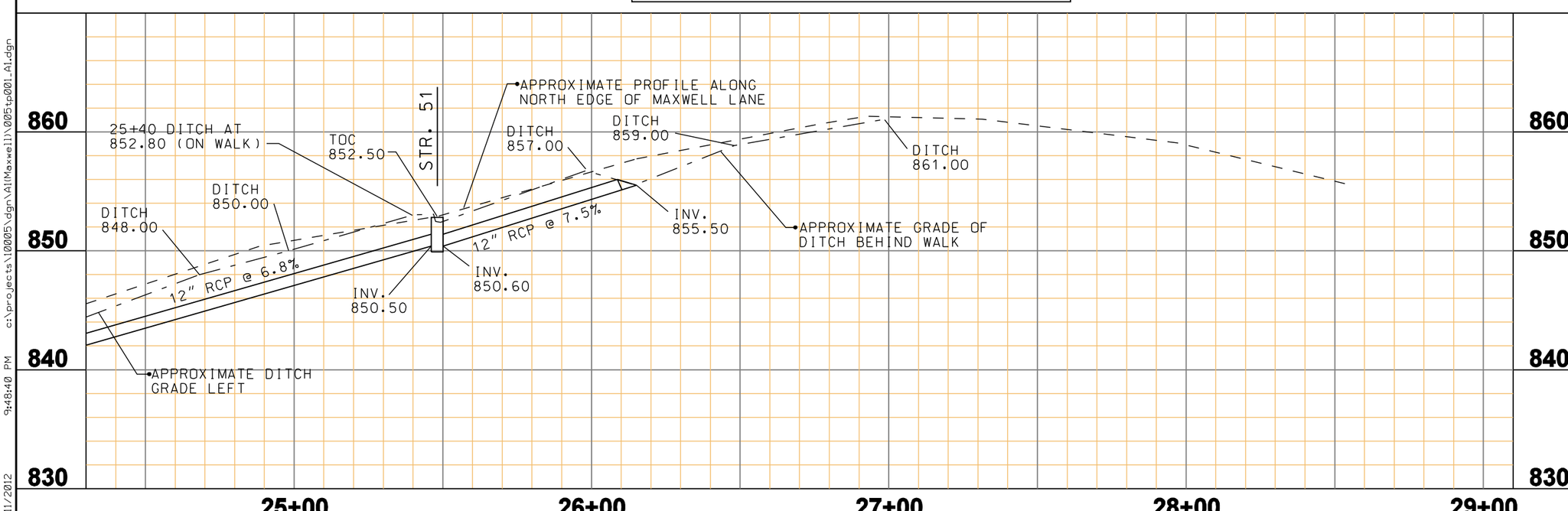

REGISTERED
BROCK RIDGWAY
No. 19300092
STATE OF INDIANA
PROFESSIONAL ENGINEER

PREPARED BY:

EAGLE RIDGE
CIVIL ENGINEERING SERVICES, LLC
1321 Laurel Oak Drive
Avon, Indiana 46123
(317)370-9672

PROJECT NO.: 005
FILENAME:

REVISIONS	
DATE	DESCRIPTION

CITY OF BLOOMINGTON
DEPT. OF PUBLIC WORKS
2006 SIDEWALK IMPROVEMENTS

PLAN AND PROFILE

SHEET NO. P2

c:\projects\10005\dgn\A1(Maxwell)\005tp001_A1.dgn 9:48:40 PM 1/11/2012

STRUCTURE DATA TABLE

NUMBER	MANHOLE, TYPE C, INLET CATCH BASIN, OR SPECIALTY STRUCTURE	EJIW CASTING NO. *	SIZE	PIPE MATERIAL	LENGTH	APPROX. COVER	TOP OF CASTING	FLOW LINE UP STREAM	FLOW LINE DOWN STREAM	CONCRETE CLASS A. FOR STRUCTURES	CONNECT TO STR. NO.	REMARKS
			in		ft	ft	elev	elev	elev	cy		
50	PIPE	-	12"	RCP CL. V	61	1.5	N/A	855.50	850.60	-	51	1 END SECTION REQ'D., (12" RCP)
51	INLET F-7	6610	12"	RCP CL. V	139	2.0	852.50	850.50	841.10	-	52	CONNECT DRAIN PIPE FROM N. SIDE (STR. 63)
51A	INLET J-10	7505	12"	RCP CL. V	13	1.5	853.10±	850.80	850.70	-	51	
52	INLET F-7	6610	12"	RCP CL. V	22	1.5	843.00±	841.00	839.00	-	53	CONNECT DRAIN PIPE FROM N. SIDE (STR. 62)
52A	INLET J-10	7505	12"	RCP CL. V	13	1.9	844.50±	841.30	841.20	-	52	
53	MANHOLE C-10	7505	18"	RCP CL. V	20	1.0	842.10±	838.17	836.70	-	54	
54	MANHOLE C-10	7505	18"	RCP CL. V	154	2.0	840.65±	836.37	824.00	-	55	
54A	INLET J-10	7505	12"	RCP CL. V	4	1.4	841.00±	838.10	838.00	-	54	
55	INLET F-7	6610	18"	RCP CL. V	135	VAR	826.10	821.50	815.54	-	56	CONNECT DRAIN PIPE FROM N. SIDE (STR. 61)
55A	INLET J-10	7505	12"	RCP CL. V	13	2.0	827.10±	824.20	824.10	-	55	
56	INLET F-7	6610	18"	RCP CL. V	27	1.0	817.75	815.44	814.80	-	57	
56A	INLET J-10	7505	12"	RCP CL. V	12	1.5	818.25±	815.60	815.50	-	56	
57	INLET F-7	6610	18"	RCP CL. V	22	1.0	816.70	814.70	EX. 813.21±	2.0	EX	REMOVE HEADWALLS. REPLACE EXISTING PIPE. CONNECT TO EXISTING STRUCTURE
57A	INLET J-10	7505	12"	RCP CL. V	13	1.5	817.00±	814.90	814.80	-	57	
61	DRAIN PIPE W/ CLEANOUT	2975	6"	PVC *	120	1.5±	+ +	+++	824.00	0.5	55	CONNECT 3 DRAIN PIPES. THEN RUN PARALLEL TO STR. 54 THEN INTO STR. 55
62	DRAIN PIPE W/ CLEANOUT	2975	6"	PVC *	78	1.5±	+ +	+++	841.50	0.5	52	CONNECT DRAIN PIPE. RUN PARALLEL TO STR. 51 THEN INTO STR. 52
63	DRAIN PIPE W/ CLEANOUT	2975	6"	PVC *	25	1.5±	+ +	+++	851.00	0.5	51	CONNECT DRAIN PIPE. RUN PARALLEL TO STR. 50 THEN INTO STR. 51

* ALL DRAIN PIPES SHALL BE IN ACCORDANCE WITH CBU SPECIFICATIONS FOR SANITARY LATERALS, WITH A CLEANOUT LOCATED AT EACH BEND OR JUNCTION.

+ + GRADE TO SLOPES

+++ MEET EXISTING DRAINS

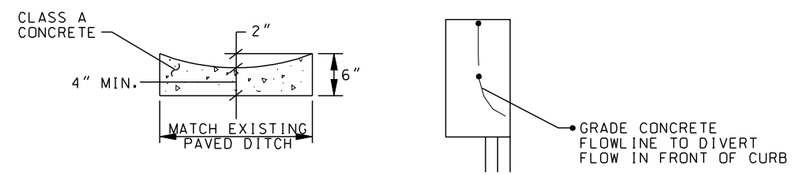

PAVED SIDE DITCH DETAIL

NTS

(FOR NORTHWEST CORNER OF MAXWELL/JORDAN)

REGISTERED BROCK RIDGWAY No. 19300092 STATE OF INDIANA PROFESSIONAL ENGINEER

PREPARED BY:

EAGLE RIDGE CIVIL ENGINEERING SERVICES, LLC

1321 Laurel Oak Drive
Avon, Indiana 46123
(317)370-9672

PROJECT NO.: 005

FILENAME:

REVISIONS	
DATE	DESCRIPTION

CITY OF BLOOMINGTON
DEPT. OF PUBLIC WORKS
2006 SIDEWALK IMPROVEMENTS

STRUCTURE DATA TABLE AND PAVED SIDE DITCH DETAIL

SHEET NO. S1

1/11/2012 9:48:46 PM c:\projects\10005\dgn\A1(Maxwell)\005tt001_A1.dgn

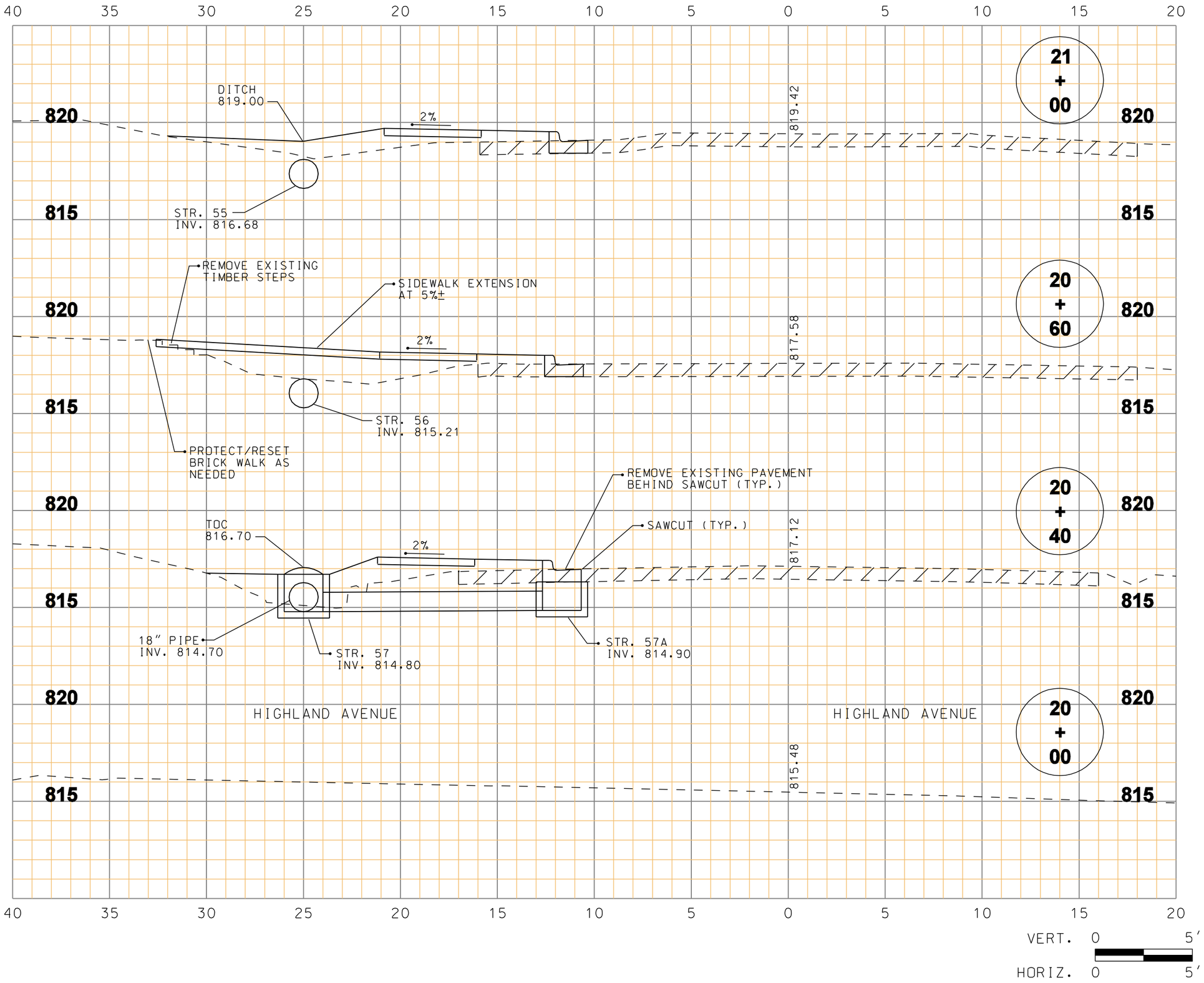

REGISTERED
BROCK RIDGWAY
No. 19300092
STATE OF INDIANA
PROFESSIONAL ENGINEER

PREPARED BY:

EAGLE RIDGE
CIVIL ENGINEERING SERVICES, LLC

1321 Laurel Oak Drive
Avon, Indiana 46123
(317)370-9672

PROJECT NO.: 005

FILENAME:

REVISIONS	
DATE	DESCRIPTION

CITY OF BLOOMINGTON
DEPT. OF PUBLIC WORKS
2006 SIDEWALK IMPROVEMENTS

CROSS SECTION

SHEET NO. X1

1/11/2012 9:48:55 PM c:\projects\10005\dgn\alfmaxwell\005xsheet_A1.dgn

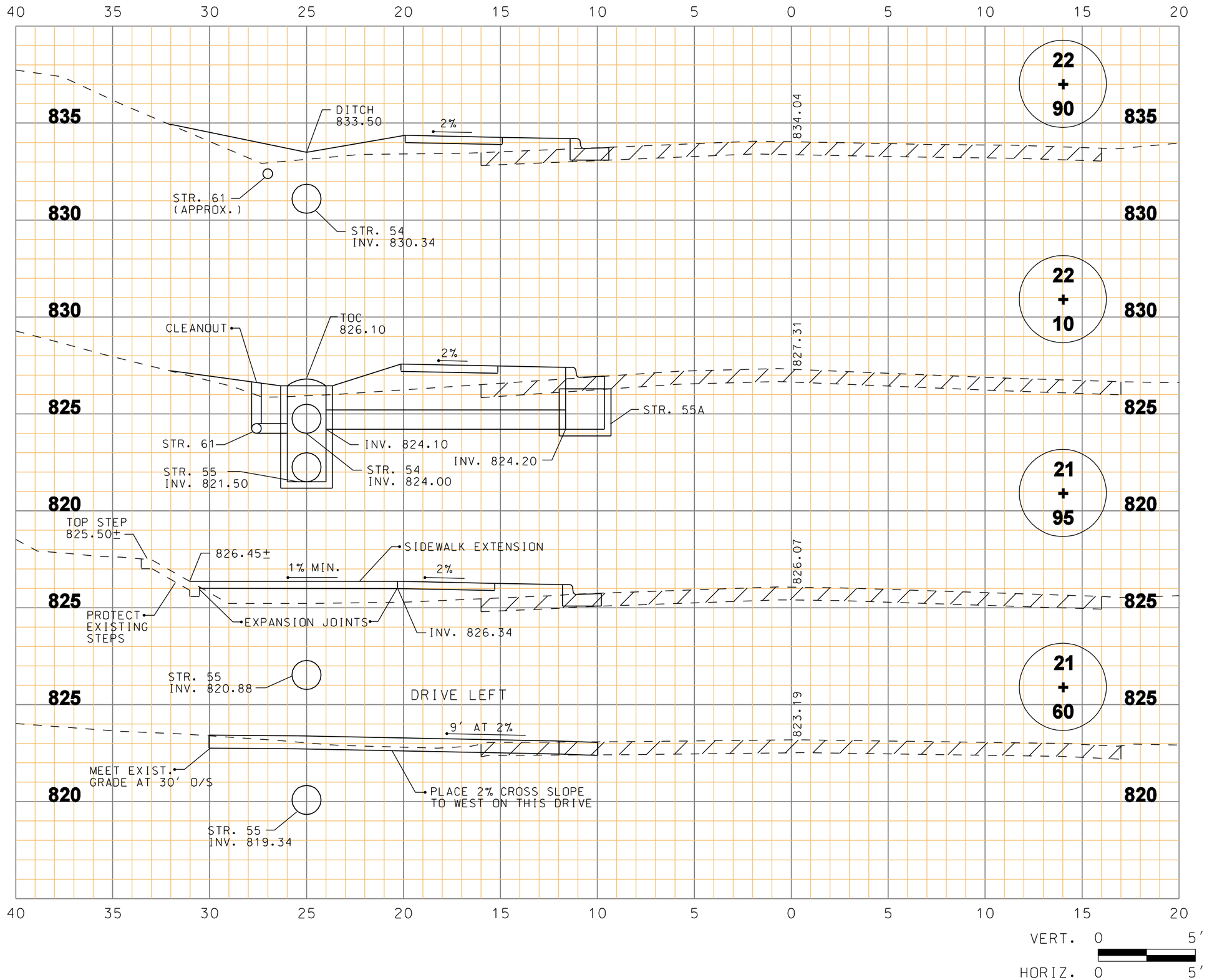

REGISTERED BROCK RIDGWAY No. 19300092 STATE OF INDIANA PROFESSIONAL ENGINEER

PREPARED BY:

EAGLE RIDGE
CIVIL ENGINEERING SERVICES, LLC
1321 Laurel Oak Drive
Avon, Indiana 46123
(317)370-9672

PROJECT NO.: 005
FILENAME:

REVISIONS	
DATE	DESCRIPTION

CITY OF BLOOMINGTON
DEPT. OF PUBLIC WORKS
2006 SIDEWALK IMPROVEMENTS

CROSS SECTION

SHEET NO. X2

c:\projects\10005\dgn\alimaxwell\005xsheet.A1.dgn 9:49:01 PM 1/11/2012

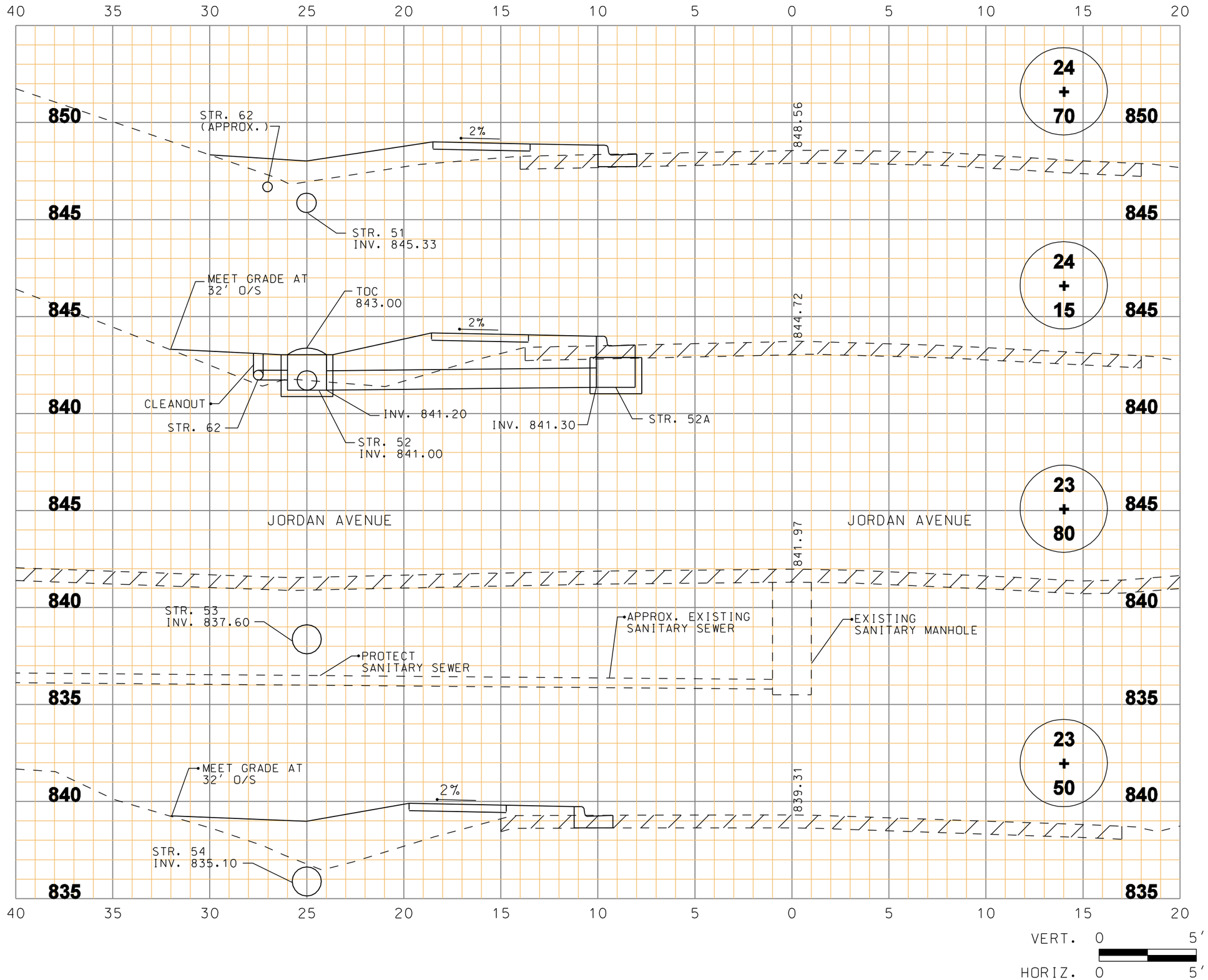

REGISTERED
BROCK RIDGWAY
No. 19300092
STATE OF INDIANA
PROFESSIONAL ENGINEER

PREPARED BY:

EAGLE RIDGE
CIVIL ENGINEERING SERVICES, LLC

1321 Laurel Oak Drive
Avon, Indiana 46123
(317)370-9672

PROJECT NO.: 005

FILENAME:

REVISIONS	
DATE	DESCRIPTION

CITY OF BLOOMINGTON
DEPT. OF PUBLIC WORKS
2006 SIDEWALK IMPROVEMENTS

CROSS SECTION

SHEET NO. X3

1/11/2012 9:49:07 PM c:\projects\10005\dgn\al(maxwell)\005xsheet.A1.dgn

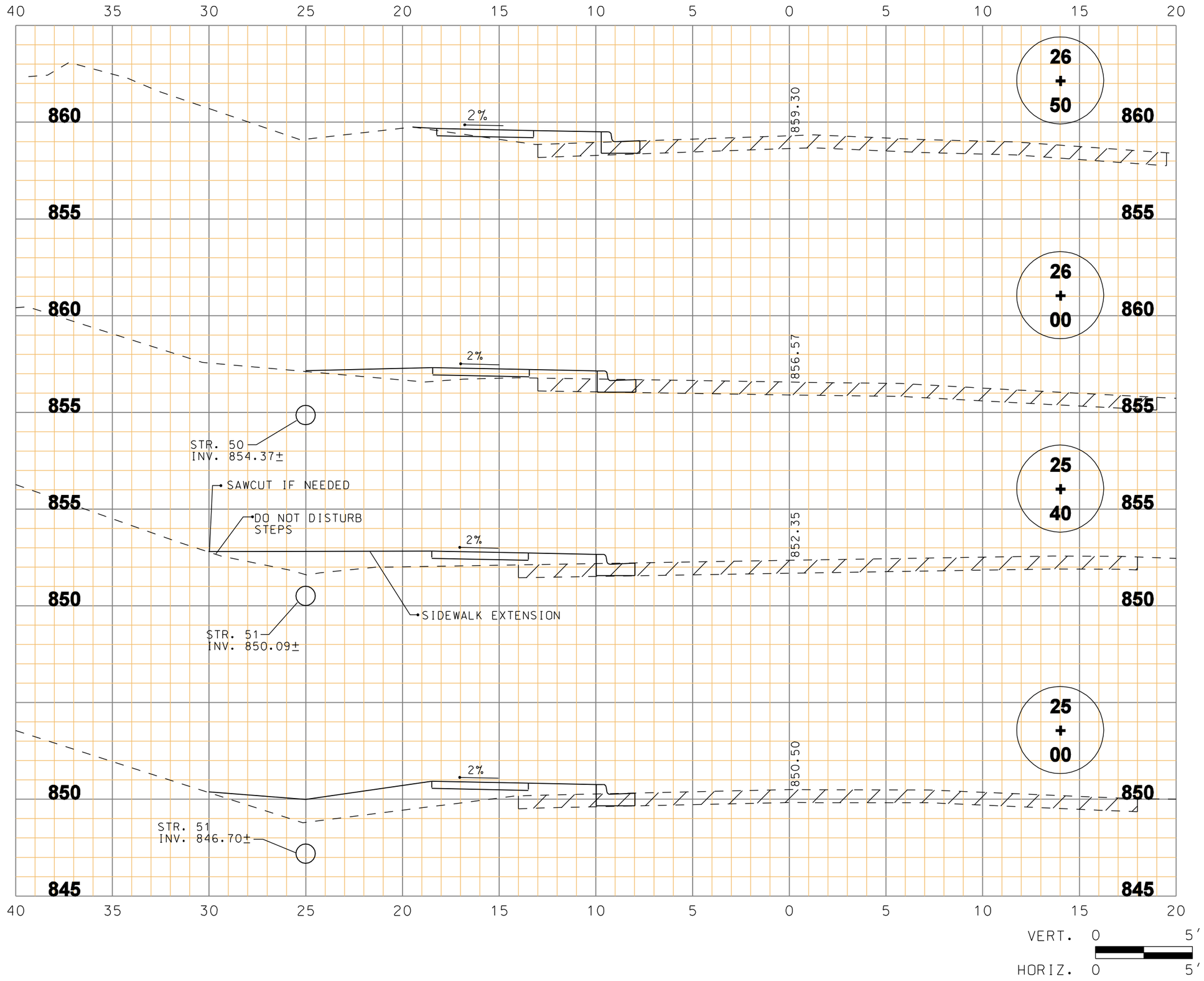

BROCK RIDGWAY
REGISTERED
No. 19300092
STATE OF INDIANA
PROFESSIONAL ENGINEER

PREPARED BY:

EAGLE RIDGE
CIVIL ENGINEERING SERVICES, LLC

1321 Laurel Oak Drive
Avon, Indiana 46123
(317)370-9672

PROJECT NO.: 005

FILENAME:

REVISIONS	
DATE	DESCRIPTION

CITY OF BLOOMINGTON
DEPT. OF PUBLIC WORKS
2006 SIDEWALK IMPROVEMENTS

CROSS SECTION

SHEET NO. X4

c:\projects\10005\dgn\alimaxwell\005xsheet_A1.dgn 9:49:12 PM 1/11/2012

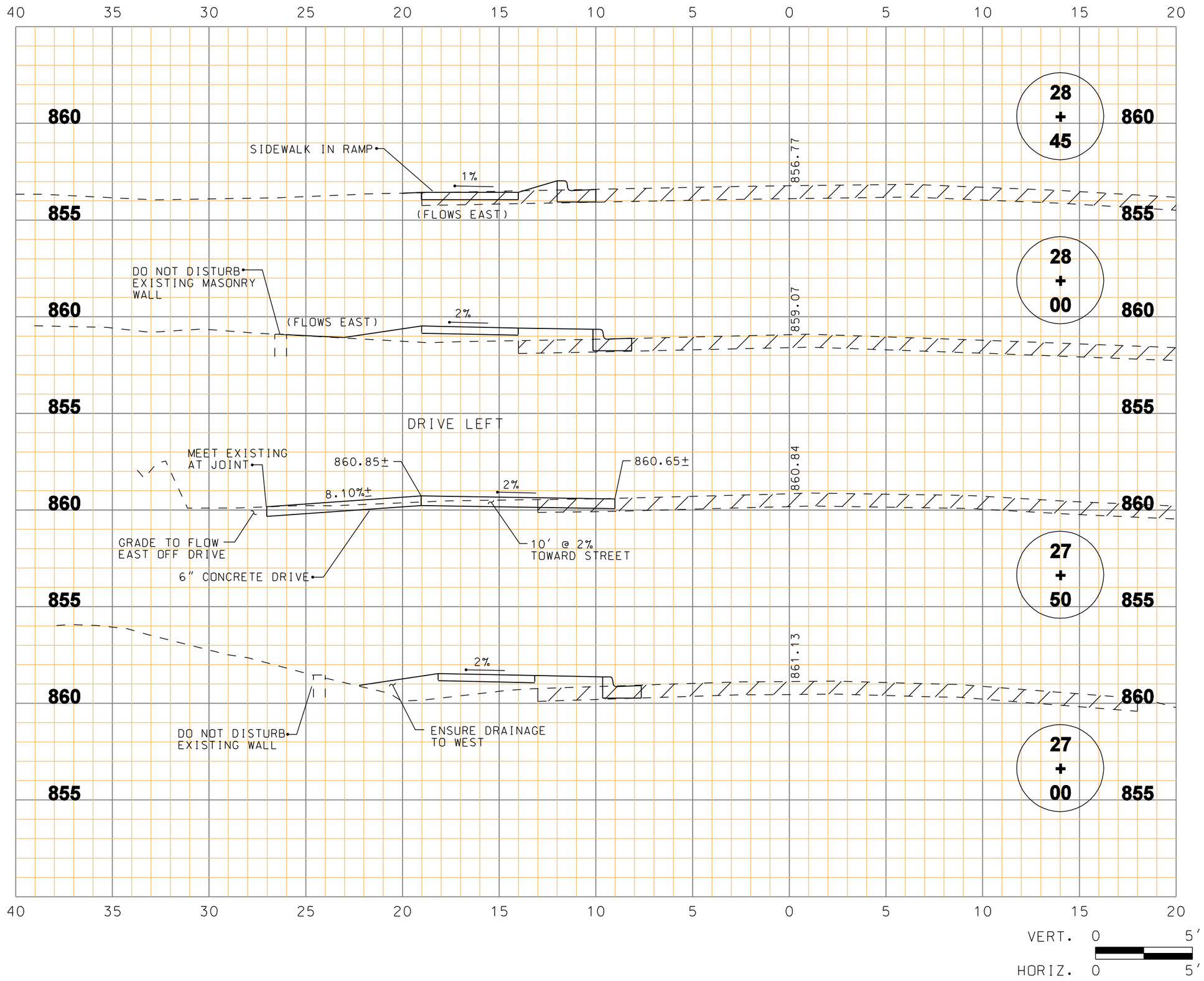

BROCK RIDGWAY
REGISTERED
No. 19300092
STATE OF INDIANA
PROFESSIONAL ENGINEER

PREPARED BY:

EAGLE RIDGE
CIVIL ENGINEERING SERVICES, LLC
1321 Laurel Oak Drive
Avon, Indiana 46123
(317)370-9672

PROJECT NO.: 005
FILENAME:

REVISIONS

DATE	DESCRIPTION

CITY OF BLOOMINGTON
DEPT. OF PUBLIC WORKS
2006 SIDEWALK IMPROVEMENTS

CROSS SECTION

SHEET NO. X5

1/11/2012 9:49:18 PM c:\projects\10005\dgn\alfmaxwell\005xsheet_A1.dgn