Appendix F – Details of Curb Construction

Detail **Page**

Combined Concrete Curb and Gutter 74

Concrete and Asphalt Curbs and Sawed Joints 75

Integral Concrete Curb 76

Transition of Earth Shoulder to Concrete Curb Section 77

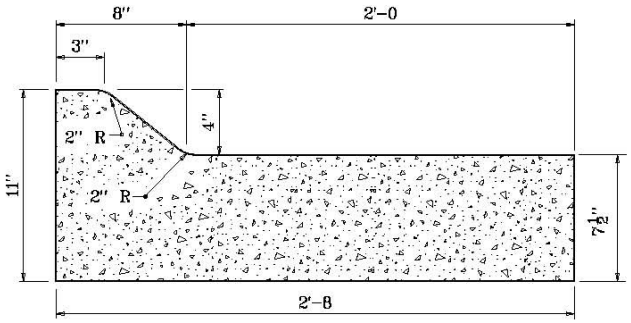

COMBINED CONCRETE CURB
AND GUTTER, TYPE B
(MOUNTABLE)

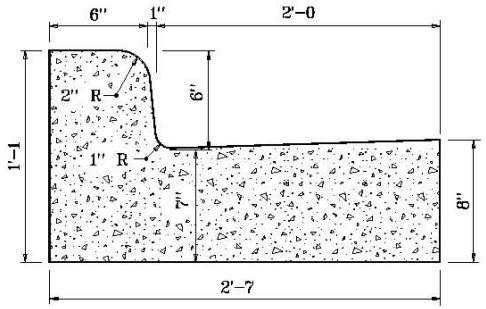

COMBINED CONCRETE CURB
AND GUTTER
(BARRIER)

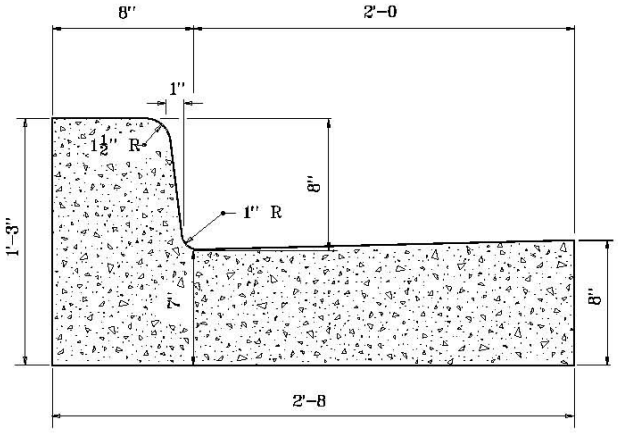

COMBINED CONCRETE CURB
AND GUTTER, TYPE C
(BARRIER)

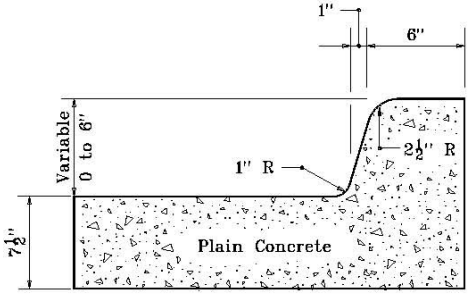

MONOLITHIC CURB

INDIANA DEPARTMENT OF TRANSPORTATION

COMBINED CONCRETE CURB AND GUTTER

SEPTEMBER 1999

STANDARD DRAWING NO. **E 605-CCCG-01**

ANTHONY L. UREMOVICH REGISTERED No. 18095 STATE OF INDIANA PROFESSIONAL ENGINEER

DESIGN STANDARDS ENGINEER

DETAILS PLACED IN THIS FORMAT 11-15-99

/s/ Anthony L. Uremovich 11-15-99
DESIGN STANDARDS ENGINEER DATE

/s/ Firooz Zandi 11-15-99
CHIEF HIGHWAY ENGINEER DATE

ORIGINALLY APPROVED 9-01-99

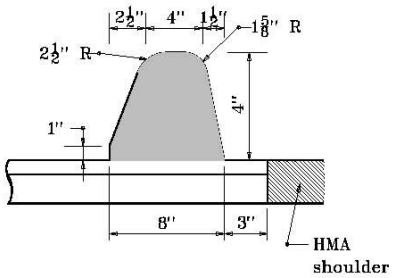

ASPHALT CURB
(MOUNTABLE)

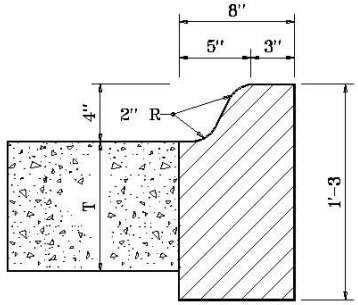

CONCRETE CURB
TYPE B
(MOUNTABLE)

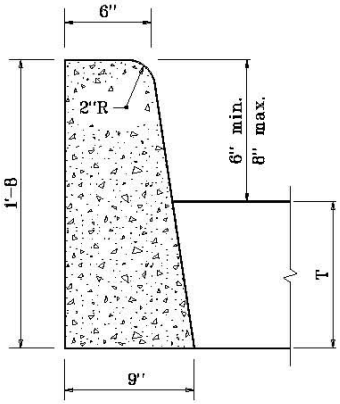

CONCRETE CURB
(BARRIER)

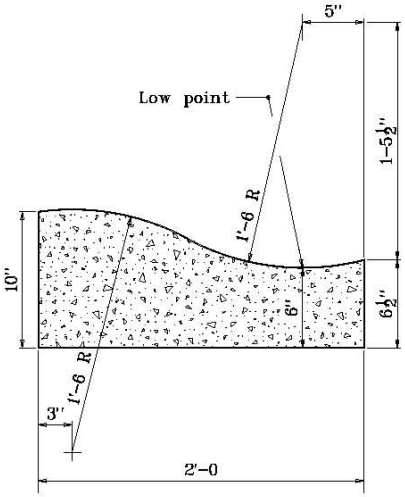

ROLLED CURB
(MOUNTABLE)

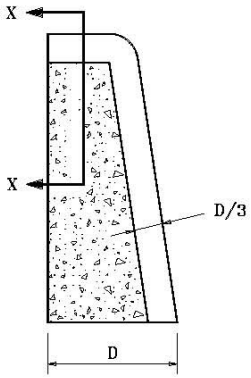

CURB

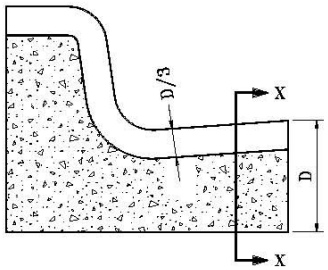

COMBINED CURB & GUTTER

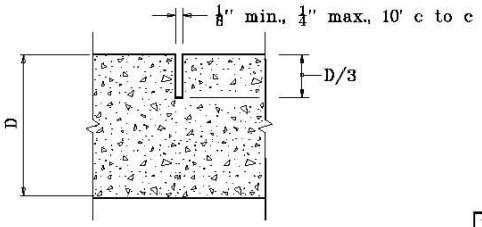

SECTION X-X

SAWED CONTRACTION JOINTS FOR CURB AND COMBINED CURB & GUTTER

INDIANA DEPARTMENT OF TRANSPORTATION

CONCRETE AND ASPHALT CURBS AND SAWED JOINTS

MAY 2000

STANDARD DRAWING NO. E 605-CCSJ-01

ANTHONY L. UREMOVICH REGISTERED No. 18095 STATE OF INDIANA PROFESSIONAL ENGINEER

DESIGN STANDARDS ENGINEER

/s/ Anthony L. Uremovich 5-01-00
DESIGN STANDARDS ENGINEER — DATE

/s/ Firooz Zandi 5-01-00
CHIEF HIGHWAY ENGINEER — DATE

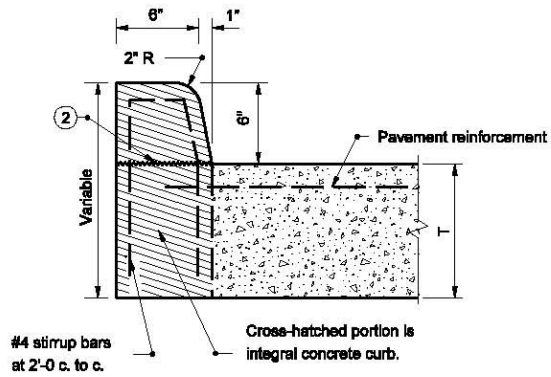

INTEGRAL CONCRETE CURB
(BARRIER)

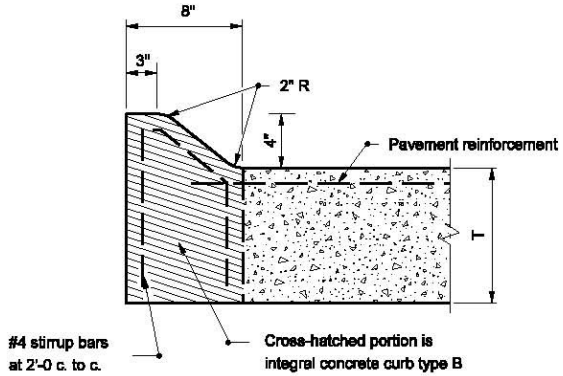

INTEGRAL CONCRETE CURB
TYPE B
(MOUNTABLE)

NOTES

1. 8" for integral concrete curb type B or C and 7" for integral concrete curb.
2. Concrete below this line may be poured with the pavement.

LEGEND

T = Nominal pavement thickness

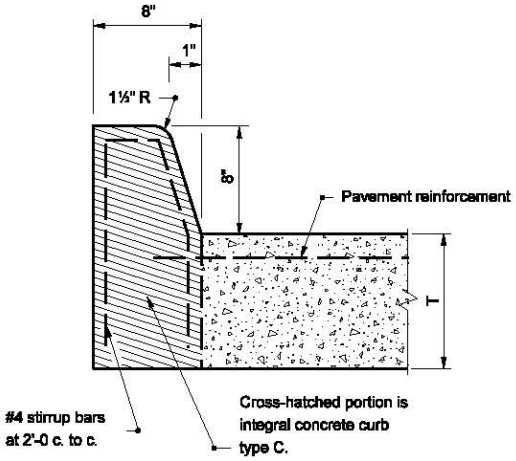

INTEGRAL CONCRETE CURB
TYPE C
(BARRIER)

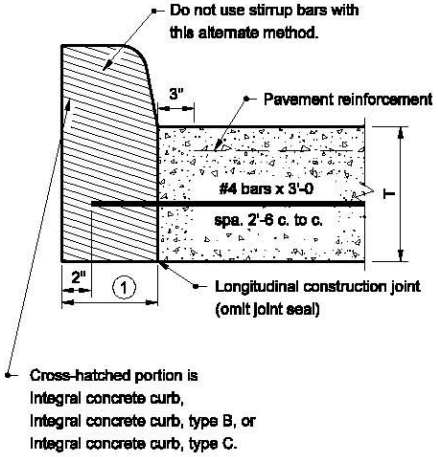

ALTERNATE METHOD
OF CONSTRUCTION FOR ALL TYPES
OF INTEGRAL CONCRETE CURB

INDIANA DEPARTMENT OF TRANSPORTATION

INTEGRAL CONCRETE CURB

SEPTEMBER 2004

STANDARD DRAWING NO. E 605-CCIN-01

RICHARD L. VanCLEAVE REGISTERED No. 9750 STATE OF INDIANA PROFESSIONAL ENGINEER

DESIGN STANDARDS ENGINEER

/s/ Richard L. VanCleave — 9-01-04
DESIGN STANDARDS ENGINEER — DATE

/s/ Richard K. Smutzer — 9-01-04
CHIEF HIGHWAY ENGINEER — DATE

LEGEND

(1) Longitudinal joint

(3) Longitudinal construction joint

T = Nominal pavement thickness

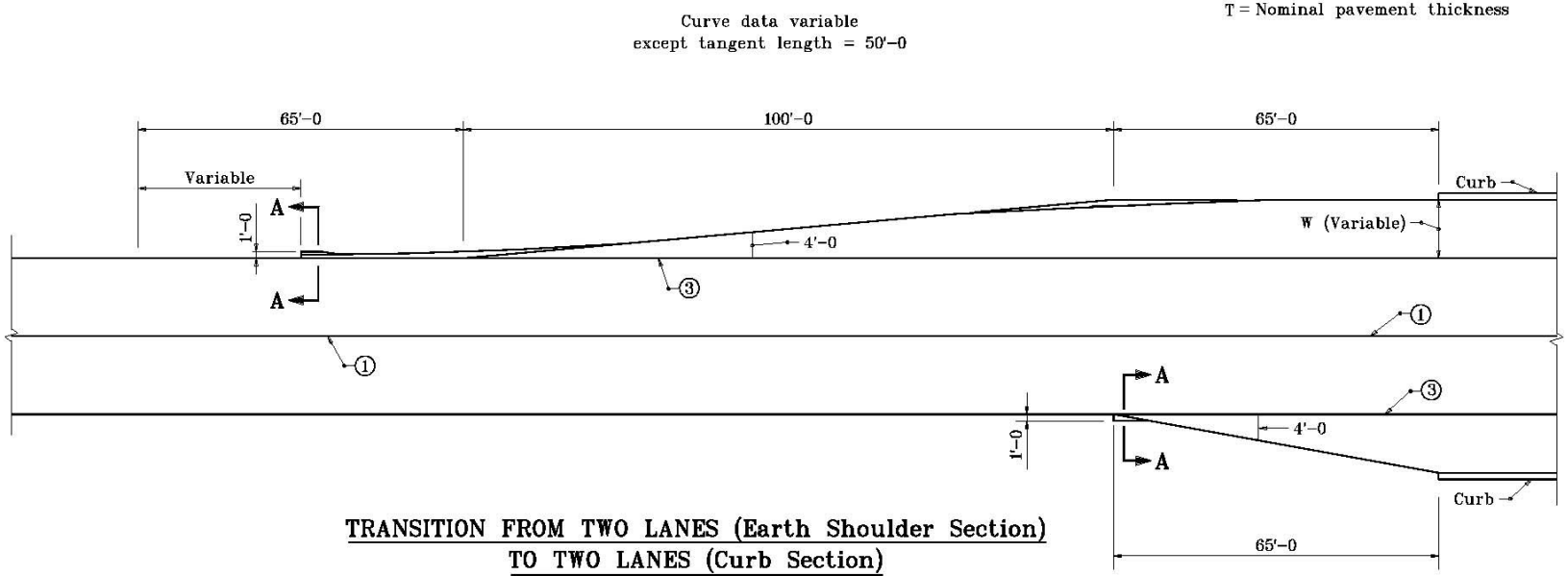

TRANSITION FROM TWO LANES (Earth Shoulder Section) TO TWO LANES (Curb Section)

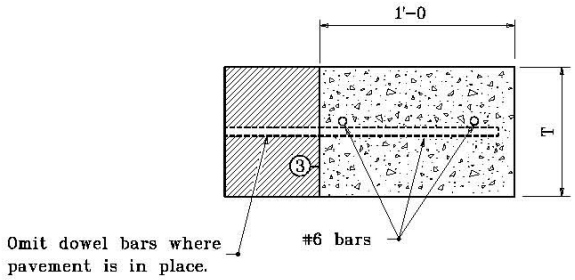

SECTION A-A

INDIANA DEPARTMENT OF TRANSPORTATION

TRANSITION OF EARTH SHOULDER TO CURB SECTION

SEPTEMBER 1997

STANDARD DRAWING NO. **E 605-TSCS-01**

ANTHONY L. UREMOVICH REGISTERED No. 18095 STATE OF INDIANA PROFESSIONAL ENGINEER

DESIGN STANDARDS ENGINEER

DETAILS PLACED IN THIS FORMAT	11-15-99
/s/ Anthony L. Uremovich DESIGN STANDARDS ENGINEER	11-15-99 DATE
/s/ Firoos Zandi CHIEF HIGHWAY ENGINEER	11-15-99 DATE
ORIGINALLY APPROVED	9-01-97