ADDENDUM NO. 2

TO THE
BIDDING DOCUMENTS
FOR
KIRKWOOD STREETSCAPE PHASE III
COLLEGE AVENUE TO ROGERS STREET
FOR THE
CITY OF BLOOMINGTON
DEPARTMENT OF PUBLIC WORKS
BLOOMINGTON INDIANA

DATE: February 17, 2010

BIDS CLOSE: February 23, at 2:00 p.m., Local Time

TO ALL BIDDERS BIDDING ON THE ABOVE PROJECT:

All Bidders submitting a Bid on the above Contract shall carefully read this Addendum and give it consideration in the preparation of their Bid.

Item 1. The following are revisions to Project Manual Section X Specifications:

1. The following revisions shall be made to SECTION 02580 – PAVEMENT MARKING:

   A. Add paragraph 1.06C as follows:

   "C. The thermoplastic pavement markings may be installed for the entire project at one time following completion of paving work in all 3 sections of work. Installation of temporary paint markings in sections reopened to traffic will not be required."

2. The following revisions shall be made to SECTION 02720 – STORM SEWERAGE:

   A. Modify paragraph 3.02D by adding the following sentence at the end of the paragraph:

   "The resulting connection between pipe and precast manhole or box inlet wall shall be soiltight in accordance with City of Bloomington Utility Standards."

Item 2 The following are revisions to the project Manual Section X Specifications under Additional Specifications for Kirkwood Phase III

1. The following revisions shall be made to SECTION 02810 – UNDERGROUND IRRIGATION SYSTEM:

   A. Delete paragraph 1.01B.1a and replace with the following:

   "a. Irrigation system including water meter setter and meter pit, backflow preventer, all piping, sleeves, and fittings from tap to meter, from meter to backflow preventer, and for the remainder of irrigation system, quickcoupler valves, valve boxes and accessories. Water main tap and water meter shall be provided by City of Bloomington Utilities."

   B. Delete paragraph 2.01C and replace with the following:

   "C. Main Line Piping

1. All main line piping downstream of the water meter assembly which is buried shall be Sch 40 PVC per ASTM D1785."

C. Delete paragraph 3.03D and replace with the following:

"D. Pavements, Walks, Etc.

1. All piping under pavements and walkways which are to remain will be bored or directional drilled with appropriate equipment and sleeving will not be required. Where pavements are to be removed and replaced the pipe will be installed inside a sleeve. Piping under walkways may be unsleeved.
2. All sleeves shall provide a minimum inside diameter of 2 times the outside diameter of the pipe to be sleeved."

Item 3 The following are revisions to the Drawings:

1. Sheet 2, Drawing G1:

A. In the general notes under paragraph 5 regarding Owner provided equipment and materials add the following at the end of the listing of Owner provided equipment and materials:

"OWNER provided equipment and materials to be installed by the Contractor shall be stored by the OWNER at the Bloomington Parks and Recreation Storage Area located at 345 South Adams Street in Bloomington. Contractor shall pick up materials and equipment between the hours of 7:30 AM and 3:00 PM Monday through Friday and provide documentation to OWNER each time Contractor takes delivery of various items. Documentation shall clearly state what items and how many of each were received by the Contractor."

B. In the general notes under paragraph 12 regarding installation of water and sewer service lines delete the last sentence of the paragraph and replace it with the following:

"All existing sewer service laterals are to be located and replaced even if they are not impacted by the new storm sewer or watermains. Sewer service laterals shall be 6-inch size unless the existing laterals are larger in which case the larger size should be used. Sewer service laterals shall be replaced to the right of way line and have a cleanout installed at the right of way line in accordance with City of Bloomington standard detail 19. The existing service tee or wye at the main may be reused if it is in good condition. If the tee or wye is in poor condition it should be repaired or replaced. The contractor should include the 11 known sanitary lateral replacements shown on the drawings in his bid price. Contractor shall verify together with City of Bloomington Utilities that all sanitary service laterals serving properties adjoining Kirkwood are replaced or served by sanitary sewers located off of Kirkwood.

2. Delete Sheet 4, Drawing P1, and from Addendum 1 drawings Sheet 5, Drawing P2, Sheet 6, Drawing P3, Sheet 7, Drawing P4, and Sheet 8, Drawing P5 and replace them with Sheet 4, Drawing P1, Sheet 5, Drawing P2, Sheet 6, Drawing P3, Sheet 7, Drawing P4, and Sheet 8 attached to this Addenda.

A. The revisions to Sheet 4 Drawing P1 pertain to revising the sanitary service laterals to show full replacement from the sanitary main to the right of way.

B. The revisions to Sheet 5 Drawing P2 pertain to:

1. Revising the sanitary service laterals to show full replacement from the sanitary main to the right of way

2. Identifying alternative Contractor work regarding the 3 watermain relocations along the Madison Street water main.

3. Adding an 8” line stop south of structure 26 to permit the watermain work on Madison Street. Isolation from the north will be with existing valves.

C. The revisions to Sheet 6 Drawing P3 pertain to:

1. Revising the sanitary service laterals to show full replacement from the sanitary main to the right of way.

2. To clearly indicate that the 2” lighting conduits in front of the Kirkwood Building where the existing walkway and trees are to remain is to be installed with directional drilling since it is outside the general limits of the construction work.

D. The revisions to Sheet 7 Drawing P4 pertain to:

1. Adding direction to the Contractor regarding the relocation of the 20” water main west of the B-Line Trail, and requiring the installation of 2 hydrostops to isolate the section to be relocated. If one or both hydrostops are not needed due to the ability to isolate the section with existing valves a credit is due to the Owner.

2. The City has been advised that demolition and renovation activities on lot 157 (222 West Kirkwood, Holden Music Store) are planned during the period when construction is planned. Contractor shall discuss, coordinate, and schedule his work with the property owner and City of Bloomington to minimize potential impacts and rework.

3. Relocation of the existing water main to be 18” under the proposed storm sewer from structure 48 may not be required if the storm and water pipes do not conflict and the storm sewer is constructed of watermain grade pipe between structure 48 and 49. Confirm if clearance exists and coordinate with City of Bloomington Utilities if use of water main grade piping is desired.

E. The revisions to Sheet 8 Drawing P5 pertain to:

1. Minor revisions to the locations of the irrigation quickconnects in the planters and the location of the water meter pit and backflow preventer.

2. Relocation of the existing water main to be 18” under the proposed storm sewer from structures 54 and 59 may not be required if the storm and water pipes do not conflict and the storm sewer is constructed of watermain grade pipe between structure 54 and 53, and 59 and 56. Confirm if clearance exists and coordinate with City of Bloomington Utilities if use of water main grade piping is desired.

3. Modify Sheets 17-21, Drawings R1 to R5 so that all references to pavement restoration type R2 are deleted and revised to pavement restoration type R1. This includes the reference in the restoration legend on Sheet 17, Drawing R1. A completely new pavement section is desired.

4. Modify Sheet 20, Drawing R4 by adding the following note:

Demolition and renovation activities on lot 157 (222 West Kirkwood, Holden Music Store) will be occurring during the period when construction is planned. Contractor shall discuss, coordinate, and schedule his work with the property owner and City of Bloomington. It is possible that revisions to the arrangement and placement of various features (brick pavers, trash cans, bench, bike loops, street light) may occur, but the quantities are anticipated to remain the same. Contractor shall include this effort in his bid price.

5. Delete Sheet 29 Drawing M1 and replace it with Sheet 29, Drawing M1 attached to this Addenda.

   A. Detail B2 related to heavy Duty Brick Pavers was revised and a note was added regarding the installation sequence and methodology for assuring that the asphalt pavement to brick paver joint remains at the same elevation after construction.

6. Delete Sheet 31 Drawing M3 and replace it with Sheet 31, Drawing M3 attached to this Addenda.

   A. Details for Final Street Surfacing and Asphalt Pavement Reconstruction were revised.

7. Modify Sheet 40 Drawing M12 as follows:

   A. Delete note 8 in the upper right corner.

   B. Revise the Reduced Pressure Assembly for Backflow Prevention to indicate that 2” x 1-1/2” reducers are to be installed immediately upstream and downstream of the reduced pressure assembly in the horizontal position and that the reduced pressure assembly should be 1-1/2” nominal size.

8. Modify Sheet 43 Drawing S2 as follows:

   A. In Section A add the following note:

      “The box culvert configuration shown is preferred. However a standard flat bottom 5 x 10 ft precast box section may also be provided at the Contractors option.”

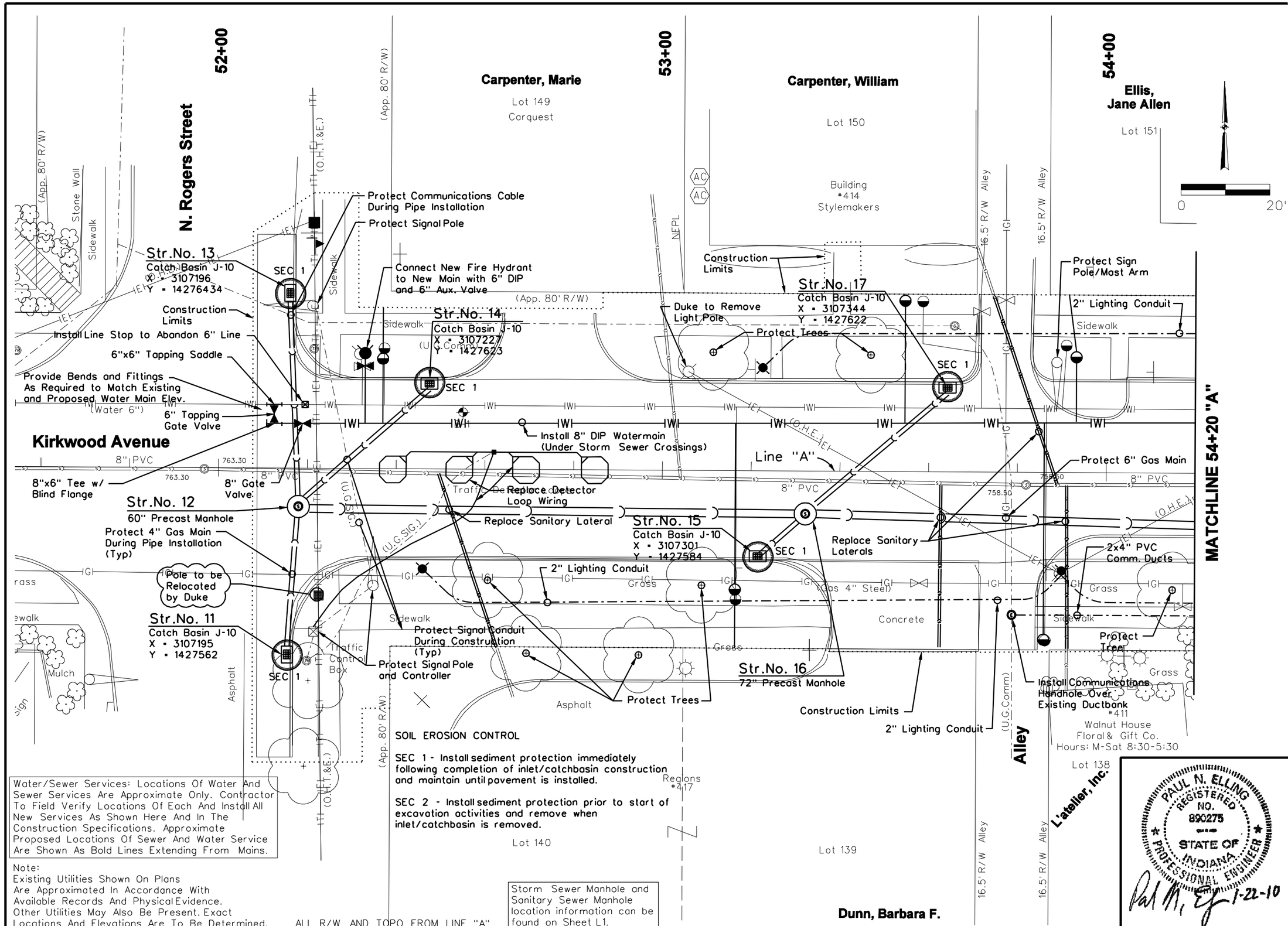

SOIL EROSION CONTROL

SEC 1 - Install sediment protection immediately following completion of inlet/catchbasin construction and maintain until pavement is installed.

SEC 2 - Install sediment protection prior to start of excavation activities and remove when inlet/catchbasin is removed.

Water/Sewer Services: Locations Of Water And Sewer Services Are Approximate Only. Contractor To Field Verify Locations Of Each And Install All New Services As Shown Here And In The Construction Specifications. Approximate Proposed Locations Of Sewer And Water Service Are Shown As Bold Lines Extending From Mains.

Note:
Existing Utilities Shown On Plans Are Approximated In Accordance With Available Records And Physical Evidence. Other Utilities May Also Be Present. Exact Locations And Elevations Are To Be Determined.

ALL R/W AND TOPO FROM LINE "A"

Storm Sewer Manhole and Sanitary Sewer Manhole location information can be found on Sheet L1.

PAUL N. ELLING
REGISTERED NO. 890275
STATE OF INDIANA
PROFESSIONAL ENGINEER
1-22-10

Revision Number	Revision Description	Drawn By	Checked By	Date
2	ADDENDUM 2 - MISC. ITEMS	PNE	PNE	02-16-10

Designed By	JAB
Drawn By	JAB
Checked By	TJM
Approved By	PNE
Filename	344TP01.DGN
Project No.	11715
Project Date	1/22/10

CITY OF BLOOMINGTON DEPT. OF PUBLIC WORKS
KIRKWOOD AVENUE STREETSCAPE PHASE III
COLLEGE AVENUE TO ROGERS STREET
BLOOMINGTON, INDIANA

UTILITY PLANS
SOIL EROSION CONTROL

DONOHUE & ASSOCIATES

Sheet No. 4

Drawing No. P1

$DATE$ $TIME$ $FILE$

...\Projects\11715\Dwg\344tp01.dgn 2/16/2010 1:23:13 PM

Ellis, Jane Allen
Lot 151
Building #406 City-County Land Titles Herbert L. Kilmer, Atty
Jane Allen Ellis Trust
Lot 152
Augenbergs, Uldis E. & Susan K.
Lot 153
55+00
56+00
N. Madison Street
(App. 80' R/W)
Contractor is advised that lowering the existing 8" WM on Madison accross the Kirkwood Intersection will be permitted instead of 3 individual relocations under the proposed Storm sewers at the contractors option. This action however may result in additional conflicts with the sanitary sewer, adjustments to the Kirkwood WM and rock excavation. No additional compensation will be provided for such work or relocations.
Relocate Watermain to 18" below Storm
Str.No. 23
Catch Basin J-10
X = 3107521
Y = 1427649
Str.No. 21
Catch Basin J-10
X = 3107493
Y = 1427623
Contractor to Identify if Manhole is Required and Coordinate with CBU. Remove if Not Required. Adjust Storm and Water Mains if Required.
Contractor to connect existing storm drains and downspouts to Str.No.21A
Connect New Hydrant to existing Main with 6" Tapping Saddle, 6" DIP and 6" Aux. Valve
Remove Existing Hydrant
Cap & Seal Ducts For Future Expansion
Gas Co. to Relocate Gas
Protect Tree
Str.No. 24
Catch Basin J-10
X = 3107559
Y = 1427657
Construction Limits
Landscape
Protect Tree
Str.No. 21A
Catch Basin J-10
X = 3107439
Y = 1427623
Install 2-8" 45° Bends
2x4" PVC Comm. Ducts
Remove Structure
Bulkhead Pipe, but Do Not Fill w/ Grout
2" Lighting Conduit
Duke Energy to Remove Light Pole
Str.No. 25
48" Precast Manhole
Connect 8" Water Main to Existing 8" Valve (Existing Configuration Unknown)
Install 6" Line Stop to Abandon 6" Line
Install 8" DIP Watermain
Duke Energy to Remove Pole
Replace Sanitary Lateral
Str.No. 19
48" Precast Manhole
Relocate Watermain to 18" below Storm
Gas Co. to Relocate Gas
Relocate Watermain to 18" below Storm
Kirkwood Avenue
2" Lighting Conduit
Contractor may reuse existing conduit if large enough and useable for layout shown
Line "A"
Str.No. 20
48" Precast Manhole
Str.No. 29
60" Precast Manhole
Protect Tree
Duke Energy to Remove Pole
Str.No. 22
Catch Basin J-10
X = 3107493
Y = 1427582
2" Lighting Conduit
2x4" PVC Comm. Ducts
2x4" PVC Comm. Ducts
Install Ducts By Directional Drilling Outside of Construction Limits
Replace Sanitary Lateral
Comm. Hand Hole
Str.No. 26
Catch Basin J-10
X = 3107521
Y = 1427554
Str.No. 27
Catch Basin J-10
X = 3107559
Y = 1427554
Protect Existing Historic Columns
Construction Limits
Protect Tree
Construction Limits
Relocate Watermain to 18" below Storm
Install temporary 8" Line Stop to isolate 8" Line together with existing valves
Gas Co. to Relocate Gas
Cap & Seal Ducts For Future Expansion
Gas Co. to Relocate Gas as Required
MATCHLINE 54+20 "A"
MATCHLINE 56+50 "A"
0 20'

SOIL EROSION CONTROL

SEC 1 - Install sediment protection immediately following completion of inlet/catchbasin construction and maintain until pavement is installed.

SEC 2 - Install sediment protection prior to start of excavation activities and remove when inlet/catchbasin is removed.

Storm Sewer Manhole and Sanitary Sewer Manhole location information can be found on Sheet L1.

Note:
Existing Utilities Shown On Plans Are Approximated In Accordance With Available Records And Physical Evidence. Other Utilities May Also Be Present. Exact Locations And Elevations Are To Be Determined.

ALL R/W AND TOPO FROM LINE "A"

Water/Sewer Services: Locations Of Water And Sewer Services Are Approximate Only. Contractor To Field Verify Locations Of Each And Install All New Services As Shown Here And In The Construction Specifications. Approximate Proposed Locations Of Sewer And Water Service Are Shown As Bold Lines Extending From Mains.

L'atelier, Inc.
Lot 138
Garrett, Nancy
Lot 137
Adams Crossing, LLC
Lot 136
*403 Historic Bldg The Garret (Batman House)

PAUL N. ELLING REGISTERED NO. 890275 STATE OF INDIANA PROFESSIONAL ENGINEER
1-22-10

Revision Number	Revision Description	Drawn By	Checked By	Date
2	ADDENDUM 2 - MISC ISSUES	PNE	PNE	02-16-10

Designed By	JAB
Drawn By	JAB
Checked By	TJM
Approved By	PNE
Filename	344TP02.DGN
Project No.	11715
Project Date	1/22/10

CITY OF BLOOMINGTON DEPT. OF PUBLIC WORKS
KIRKWOOD AVENUE STREETSCAPE PHASE III
COLLEGE AVENUE TO ROGERS STREET
BLOOMINGTON, INDIANA

UTILITY PLANS
SOIL EROSION CONTROL

DONOHUE & ASSOCIATES

Sheet No. 5
Drawing No. P2

$FILE$ $TIME$ $DATE$

...\Projects\11715\Dwg\344tp02.dgn 2/17/2010 10:25:25 AM

57+00

58+00

MATCHLINE 56+50 "A"

MATCHLINE 58+80 "A"

Install 4" PVC conduit to Duke pole in alley (150 ft +/-) Install and Terminate at pole per Duke requirements. Duke to install wire to service pedestal. Repair trench to match existing pavement

Proposed Storm Culvert
Dimensions - 10.0' x 5.0'
(5'-2" at Culvert ℄)
Length = 87.0'
Downstream Inv. = 750.25
Upstream Inv. = 750.86
Slope = 0.70%

SOIL EROSION CONTROL

SEC 1 - Install sediment protection immediately following completion of inlet/catchbasin construction and maintain until pavement is installed.

SEC 2 - Install sediment protection prior to start of excavation activities and remove when inlet/catchbasin is removed or construction is completed.

Augenbergs, Uldis E. & Susan K.

Lot 154

Construction Limits

Sta. 57+38.1 "A" 47.16' Left

Right Of Entry Needed

2" Lighting Conduit routed under culvert

Sta. 57+48.1 "A" 47.12' Left

Duke Energy to Remove Pole

Service Pedestal with 200 Amp Meter Base. Locate at ROW Line. See Drawing M13 for Information.

Str.No. 31A
2x6" PVC to Connect to Existing Area Inlet

Construction Limits

Install Sheet Pile To Protect Existing Building if required

2 Story Brick Building #314

Timbermakers

2" Lighting Conduit

Landscape Timbers

Flowers

Str.No. 35
Catch Basin A-2
Remove Exist. Str.
X = 3107714
Y = 1427621

Str.No. 34
Catch Basin C-15
X = 3107690
Y = 1427622

Protect Trees

Sidewalk

Potential Watermain Conflict

(O.H.E.)

SEC 1

Str.No. 31
Catch Basin J-10
X = 3107649
Y = 1427622

748.25

B-3

Remove Structure Bulkhead Pipe, But Do Not Fill w/ Grout

Replace Sanitary Lateral

6" PVC

754.73

754.63

8" PVC

Str.No. 33
60" Precast Manhole

SEC 2

Protect Trees

Flow Monitoring Sump Handhole

18" Steel

CONCRETE

2" Lighting Conduit

Brick

2x4" PVC Comm. Ducts

Install Ducts by Directional Drilling Outside of Construction limits

(App. 80' R/W)

LANDSCAPING

WALL

Construction Limits

PATIO

Install Sheet Pile To Protect Existing Building if required

Sta. 57+37.7 "A" 39.84' Right

Sta. 57+42.9 "A", 33' R
Install Flow Monitoring Sump Per Misc. Details

KIRKWOOD BUILDING

Lot 135

Adams Crossing, LLC

16.5' R/W Alley

Storm Tunnel 9.5' Wide x 5.7' High Concrete Box Section Natural Bottom

Storm Tunnel 9.2' Wide x 5' High Stone Arch Section Natural Bottom

Abandoned Sanitary Sewer

Install 8" Gate Valve and 2-45° Elbows

Sta. 57+37.9 "A"

3-2" Lighting and Power Conduits

Access Manhole To Culvert

24" RCP

751.51

751.81

18" RCP

Sta. 57+47.9 "A"

Place Bulkhead After Abandoning Sewer in Place Fill With 100 PSI Grout

Remove Structure

SEC 1

Comm Hand Hole

754.07

Install 2x4" PVC Comm. Ducts under culvert

750.08

CONCRETE

Sta. 57+47.7 "A" 39.88' Right

2-Billboards

Remove Existing Inlet and Connecting Pipe SEC 2

Right Of Entry Needed

Lot 134

Water/Sewer Services: Locations Of Water And Sewer Services Are Approximate Only. Contractor To Field Verify Locations Of Each And Install All New Services As Shown Here And In The Construction Specifications. Approximate Proposed Locations Of Sewer And Water Service Are Shown As Bold Lines Extending From Mains.

Storm Sewer Manhole and Sanitary Sewer Manhole location information can be found on Sheet L1.

Note:
Existing Utilities Shown On Plans Are Approximated In Accordance With Available Records And Physical Evidence. Other Utilities May Also Be Present, Exact Locations And Elevations Are To Be Determined.

ALL R/W AND TOPO FROM LINE "A"

Elmore Y Orrego, LLC

Lot 155

Lot 156

Building #304

Right Of Entry Needed

Protect Tree

Construction Limits

(App. 80' R/W)

Sidewalk

2" Lighting Conduit

Str.No. 39
Catch Basin A-2
X = 3107741
Y = 1427626

Asphalt

SEC 1

(Water 8")

Str.No. 40
Catch Basin J-10
X = 3107786
Y = 1427621

(Abandoned Water 6")

Str.No. 43
Catch Basin J-10
X = 3107848
Y = 1427621

Line "A"

Kirkwood Avenue

Relocate Watermain Under New Culvert Install 8" DIP Watermain in 20' of 20" Steel Casing

Remove Watermain If Encountered

Str.No. 41
72" Precast Manhole

Str.No. 42
72" Precast Manhole

B-4

Str.No. 38
Catch Basin J-10
X = 3107745
Y = 1427588

Protect Tree

Duke Energy to Remove Pole

Protect Tree

Conc.

CLF

Str.No. 37
Catch Basin A-2
X = 3107734
Y = 1427565

Grade Area To Drain From Lot To Area Inlet (Str. No. 37)

2" Lighting Conduit

Construction Limits

Asphalt

Notes: All Existing Sewers Abandoned By This Project Shall Be Bulkheaded At Each End And Filled w/ 100 psi Grout.

Excavation for culvert replacement adjacent to existing buildings shall only proceed to TOP of building footings prior to installing sheet piles. If Excavation must extend below top of building footings sheet pile shall be installed and shall extend to rock elevation and be braced to prevent movement.

Lot 157

CFC, Inc.,

Revision Number	Revision Description	Drawn By	Checked By	Date
1	ADDENDUM 1 - ST LIGHT DESIGN	JAB	PNE	02-02-10
2	ADDENDUM 2 - MISC. ISSUES	PNE	PNE	02-16-10

Designed By	JAB
Drawn By	JAB
Checked By	TJM
Approved By	PNE
Filename	344TP03.DGN
Project No.	11715
Project Date	1/22/10

CITY OF BLOOMINGTON DEPT. OF PUBLIC WORKS
KIRKWOOD AVENUE STREETSCAPE PHASE III
COLLEGE AVENUE TO ROGERS STREET
BLOOMINGTON, INDIANA

UTILITY PLANS
SOIL EROSION CONTROL

PAUL N. ELLING REGISTERED NO. 890275 STATE OF INDIANA PROFESSIONAL ENGINEER
1-22-10

DONOHUE & ASSOCIATES

Sheet No. 6

Drawing No. P3

$FILE$ $DATE$ $TIME$

...\Projects\11715\Dwg\344tp03.dgn 2/16/2010 12:50:26 PM

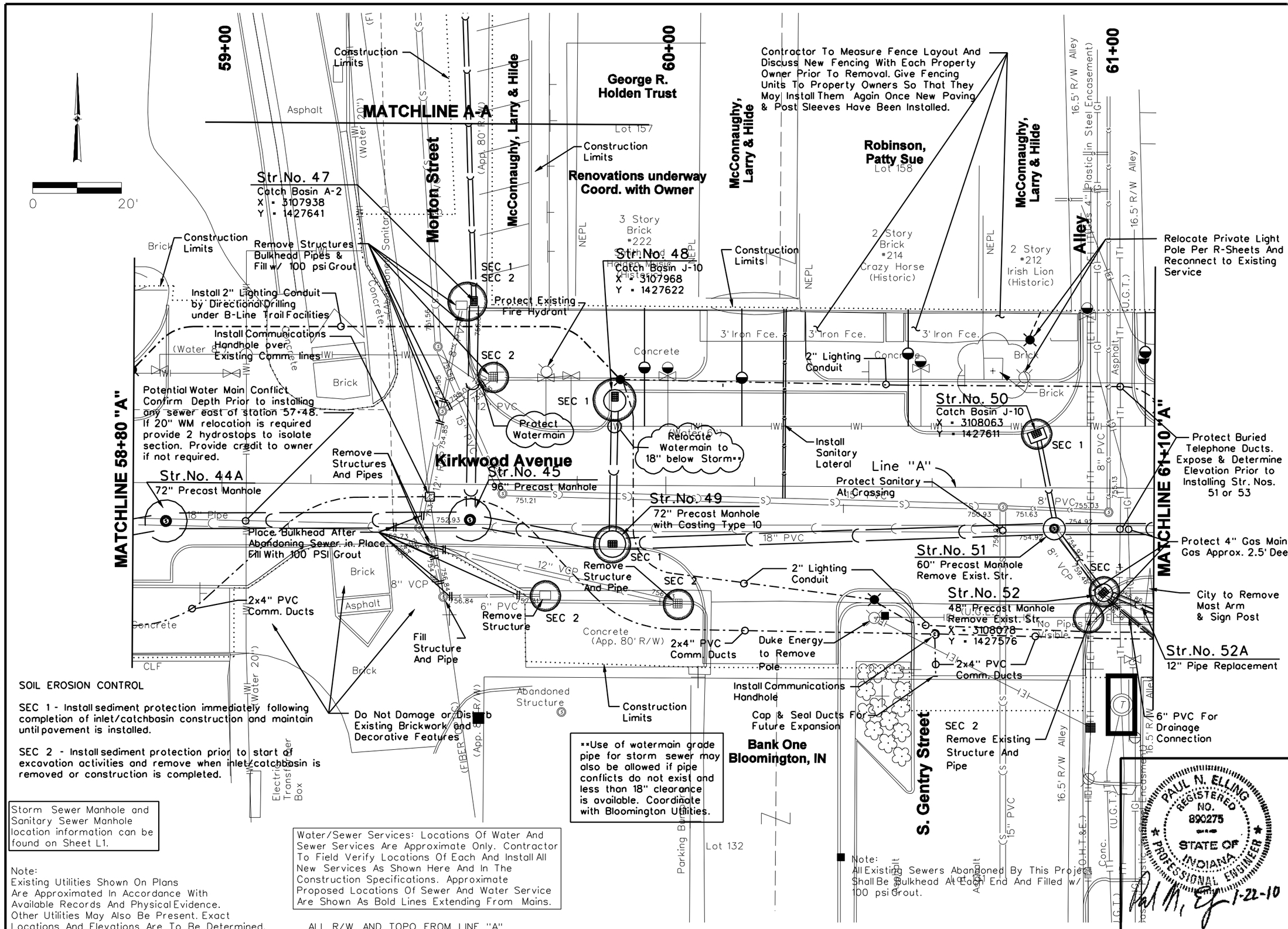

SOIL EROSION CONTROL

SEC 1 - Install sediment protection immediately following completion of inlet/catchbasin construction and maintain until pavement is installed.

SEC 2 - Install sediment protection prior to start of excavation activities and remove when inlet/catchbasin is removed or construction is completed.

**Use of watermain grade pipe for storm sewer may also be allowed if pipe conflicts do not exist and less than 18" clearance is available. Coordinate with Bloomington Utilities.

Storm Sewer Manhole and Sanitary Sewer Manhole location information can be found on Sheet L1.

Note:
Existing Utilities Shown On Plans Are Approximated In Accordance With Available Records And Physical Evidence. Other Utilities May Also Be Present. Exact Locations And Elevations Are To Be Determined.

Water/Sewer Services: Locations Of Water And Sewer Services Are Approximate Only. Contractor To Field Verify Locations Of Each And Install All New Services As Shown Here And In The Construction Specifications. Approximate Proposed Locations Of Sewer And Water Service Are Shown As Bold Lines Extending From Mains.

ALL R/W AND TOPO FROM LINE "A"

PAUL N. ELLING REGISTERED NO. 890275 STATE OF INDIANA PROFESSIONAL ENGINEER
1-22-10

Revision Number	Revision Description	Drawn By	Checked By	Date
2	ADDENDUM 2 - MISC. ISSUES	JAB	PNE	02-02-10

Designed By	JAB
Drawn By	JAB
Checked By	TJM
Approved By	PNE
Filename	344TP04.DGN
Project No.	11715
Project Date	1/22/10

CITY OF BLOOMINGTON DEPT. OF PUBLIC WORKS
KIRKWOOD AVENUE STREETSCAPE PHASE III
COLLEGE AVENUE TO ROGERS STREET
BLOOMINGTON, INDIANA

UTILITY PLANS
SOI; EROSION CONTROL

DONOHUE & ASSOCIATES

Sheet No. 7

Drawing No. P4

$TIME$ $DATE$ $FILE$

...\Projects\11715\Dwg\344tp04.dgn 2/17/2010 10:55:12 AM

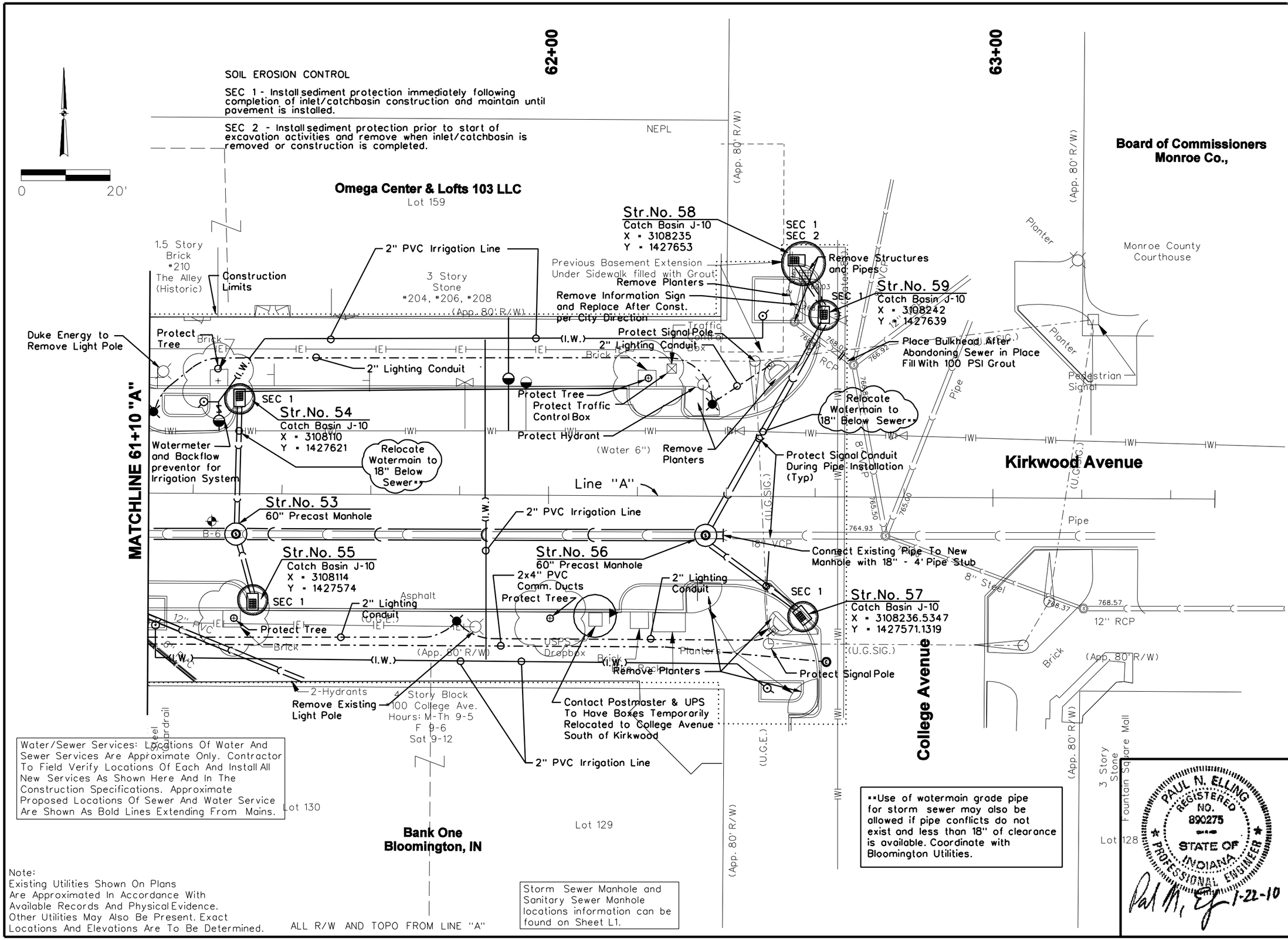

Revision Number	Revision Description	Drawn By	Checked By	Date
2	ADDENDUM 2 - MISC. ISSUES	PNE	PNE	02-16-10

Designed By	JAB
Drawn By	JAB
Checked By	TJM
Approved By	PNE
Filename	344TP05.DGN
Project No.	11715
Project Date	1/22/10

CITY OF BLOOMINGTON DEPT. OF PUBLIC WORKS
KIRKWOOD AVENUE STREETSCAPE PHASE III
COLLEGE AVENUE TO ROGERS STREET
BLOOMINGTON, INDIANA

UTILITY PLANS
SOIL EROSION CONTROL

DONOHUE & ASSOCIATES

Sheet No. 8

Drawing No. P5

$DATE$ $TIME$ $FILE$

...\Projects\11715\Dwg\344tp05.dgn 2/17/2010 11:01:29 AM

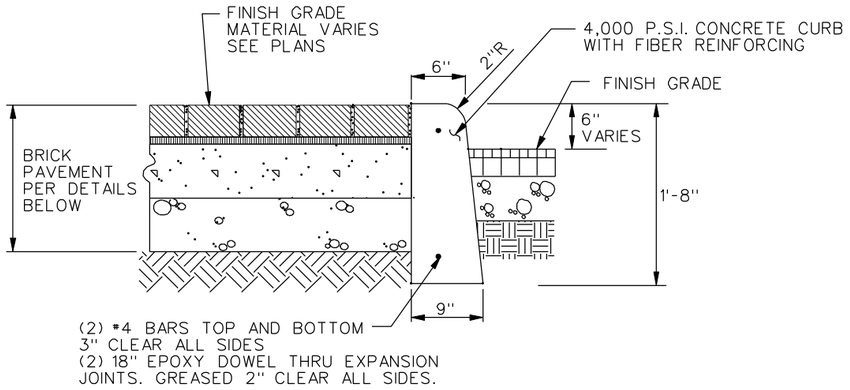

BRICK PAVING/CONCRETE CURB

NO SCALE

NOTES:
1. HAND FINISH CURB TO A 6" DEPTH (TYP.)
2. MACHINE FORMED CURB IS PERMISSIBLE WITH INDOT CLASS A CONCRETE IN LIEU OF REBARS, EXP.JT.DOWELS STILL REQUIRED.

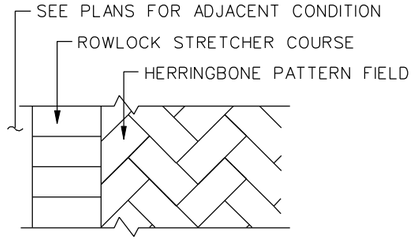

SIDEWALK BRICK LAYOUT

NOTE:
APPLIES WHERE BRICK PAVING IS TO BE CONSTRUCTED ADJACENT TO NEW CURB.

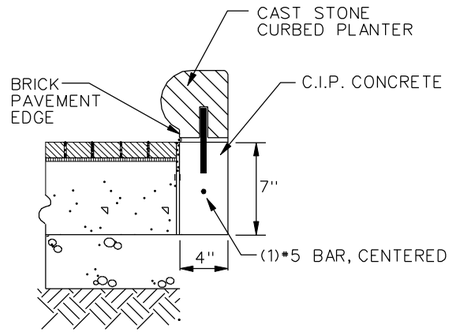

BRICK PAVEMENT EDGE AT PLANTER

NO SCALE

Note:

All Brick Pavers shall generally match the color and texture of the existing Brick Pavers on previously completed sections of Kirkwood between Walnut and Dunn Streets.

Brick Pavers shall be Pathway Full Range Red 4 x 8 x 2-1/4" thick Clay Solid (uncored) Brick Pavers by Pine Hall Brick Company or equal, complying with ASTM C902 in pedestrian areas and ASTM C1272 in vehicular areas.

Brick Pavers shall meet the absorbtion and freeze thaw requirements in the ASTM specifications without the use of sealers or products applied to the pavers.

Pine Hall Brick Company, Madison North Carolina 27025, www.pinehallbrick.com

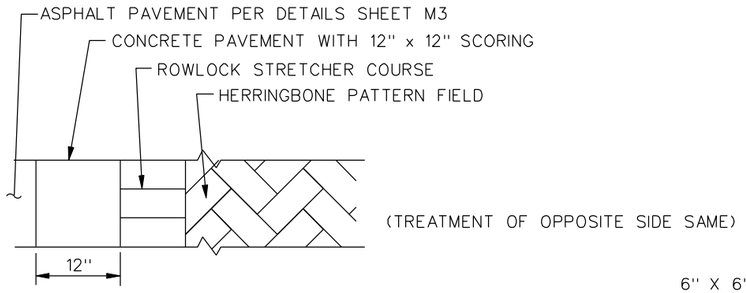

CROSSWALK BRICK LAYOUT

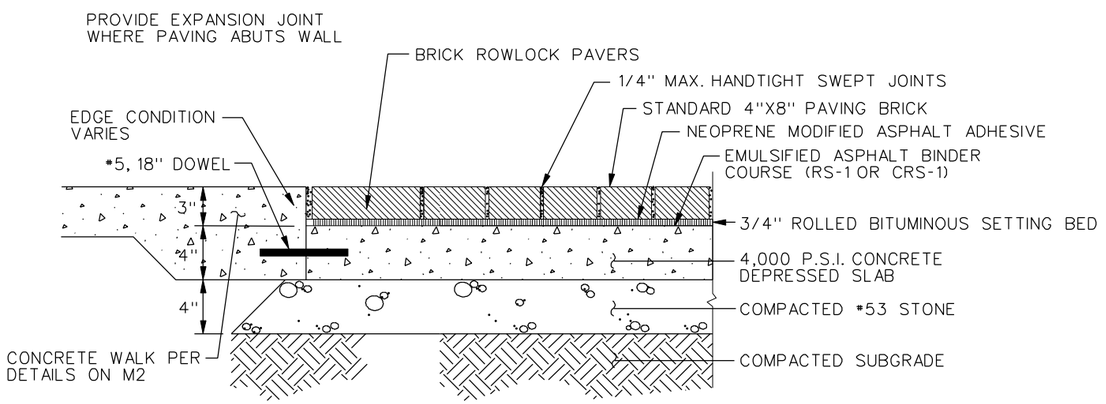

B1 BRICK PAVEMENT/ CONCRETE SIDEWALK

(PEDESTRIAN AREAS)
NO SCALE

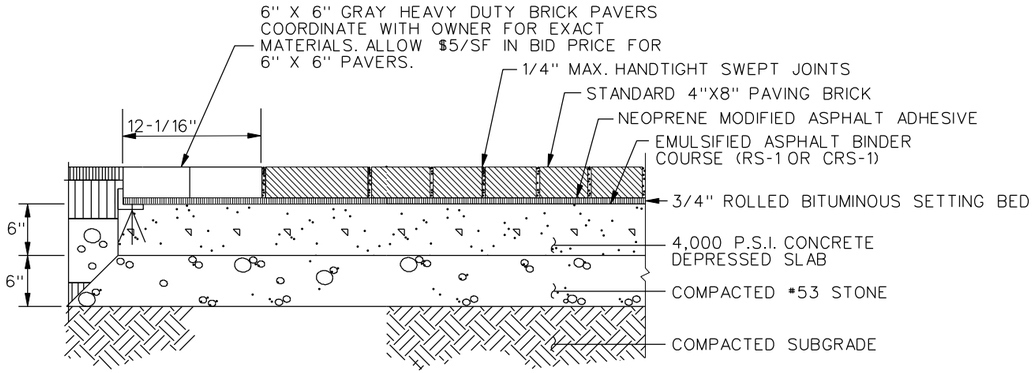

B2 HEAVY DUTY BRICK PAVEMENT

(CROSSWALKS IN STREETS AND DRIVES)
NO SCALE

NOTES:
PROVIDE EXPANSION JOINT WHERE PAVING ABUTS WALLS.

COORDINATE WITH OWNER FOR SPECIFIC INSTALLATION SEQUENCE TO ASSURE PAVEMENT/PAVER JOINT DOES NOT HAVE DIFFERING ELEVATIONS. SEQUENCE REQUIRES POURING CONCRETE BASE FIRST, PAVING UP TO AND OVER EDGE OF CONCRETE TO DEPTH OF PAVERS, SAWCUTTING PAVEMENT AT EDGE OF CONCRETE AND THEN INSTALLATION OF PAVERS OVER CONCRETE. WOOD BLOCKING OVER CONCRETE WILL BE REQUIRED TO MAINTAIN EXACT PAVEMENT DEPTH.

PAUL N. ELLING
REGISTERED
NO.
890275
STATE OF
INDIANA
PROFESSIONAL ENGINEER
1-22-10

Revision Number	Revision Description	Drawn By	Checked By	Date
2	ADDENDUM 2 - MISC. ITEMS	PNE	PNE	02-16-10

Designed By	ARS
Drawn By	ARS
Checked By	PNE
Approved By	BR
Filename	344TD01.DGN
Project No.	11715
Project Date	1/22/10

CITY OF BLOOMINGTON DEPT. OF PUBLIC WORKS
KIRKWOOD AVENUE STREETSCAPE PHASE III
COLLEGE AVENUE TO ROGERS STREET
BLOOMINGTON, INDIANA

BRICK PAVING DETAILS

DONOHUE & ASSOCIATES

Sheet No. 29

Drawing No. M1

$FILE$ $DATE$ $TIME$

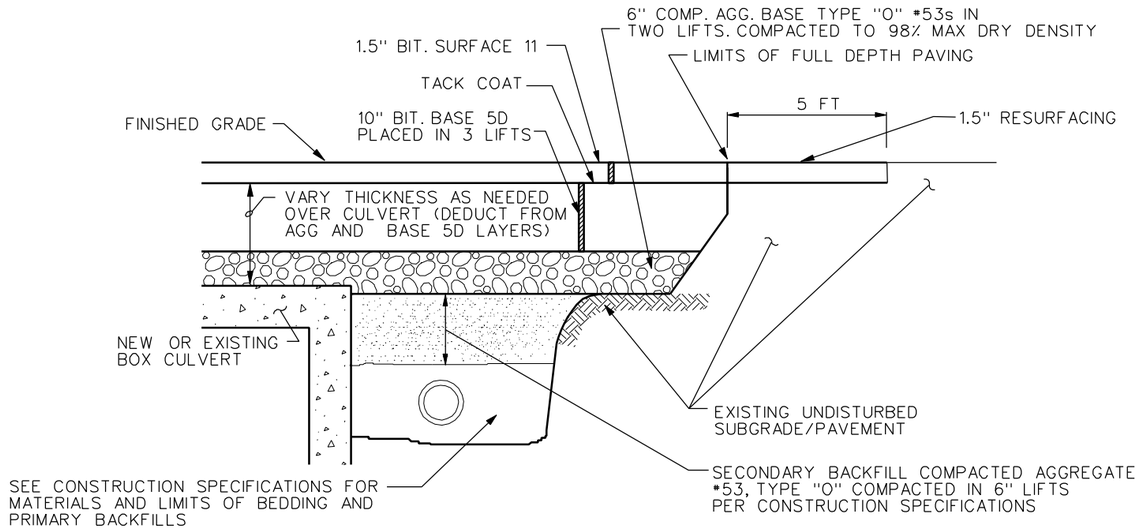

OVER BOX CULVERT OVER UTILITY TRENCH OTHER AREAS (TREATMENT OF JOINT TO EXISTING PAVEMENT)

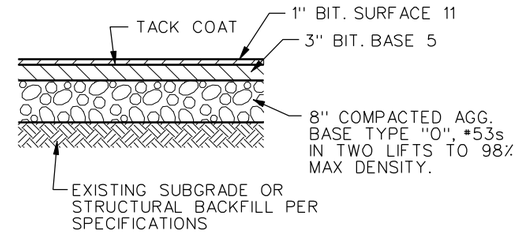

DRIVES AND ALLEYS

NOTES:
1. THIS DETAIL APPLIES IN ALL DRIVES AND ALLEYS TO RECEIVE ASPHALT PAVEMENT EXCEPT IN AREAS TO RECEIVE A CONCRETE AND BRICK INLAY. SEE PLANS FOR LOCATIONS AND SHEET M1 FOR DETAILS.

2. TREATMENT OVER UTILITY TRENCHES AND BOX CULVERTS AS SHOWN TO LEFT.

STREETS

ASPHALT PAVEMENT RECONSTRUCTION DETAIL

NO SCALE

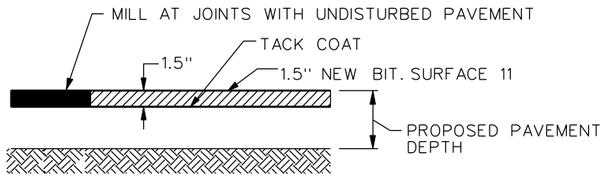

FINAL STREET SURFACING DETAILS

NO SCALE

NOTES:
1. MILL ADJOINING PAVEMENTS PRIOR INSTALLING FINAL PAVEMENT SURFACE.

2. ADJUST ALL CASTINGS TO PROPER FINISH GRADE PRIOR TO FINAL PAVING.

3. RECONSTRUCT PAVEMENT BELOW SURFACE PER PAVEMENT DETAILS ON THIS SHEET.

4. THIS DETAIL APPLIES IN ALL STREET AREAS TO RECEIVE ASPHALT PAVEMENT EXCEPT THOSE AREAS TO RECEIVE A CONCRETE AND BRICK INLAY. SEE PLANS FOR LOCATIONS AND SHEET M1 FOR DETAILS.

5. MINIMUM MILLING WIDTH OF 5 FT AT CONNECTIONS TO UNDISTURBED PAVEMENT.

PAUL N. ELLING REGISTERED NO. 890275 STATE OF INDIANA PROFESSIONAL ENGINEER
1-22-10

Revision Number	Revision Description	Drawn By	Checked By	Date
2	ADDENDUM 2 - MISC. ITEMS	PNE	PNE	02-16-10

Designed By	JAB
Drawn By	JAB
Checked By	TJM
Approved By	PNE
Filename	344TD03.DGN
Project No.	11715
Project Date	1/22/10

CITY OF BLOOMINGTON DEPT. OF PUBLIC WORKS
KIRKWOOD AVENUE STREETSCAPE PHASE III
COLLEGE AVENUE TO ROGERS STREET
BLOOMINGTON, INDIANA

ASPHALT PAVING DETAILS

DONOHUE & ASSOCIATES

Sheet No. 31

Drawing No. M3

$FILE$ $DATE$ $TIME$

...\Projects\11715\Dwg\344td03.dgn 2/17/2010 11:21:04 AM