TABLE OF CONTENTS

4. **CONSTRUCTION SPECIFICATIONS FOR SANITARY, WATER, AND STORM PROJECTS**.
4.1. **Scope.**
4.1.1. Description.
4.1.2. Order of Precedence.
4.1.3. Limits of Work.
4.1.3.1. On Private Property.
4.1.3.2. Work Within State Highway and Railroad Right-of-way.
4.1.3.3. Road Cut Permits.

4.2. **Project Requirements.**
4.2.1. Notification Procedures.
4.2.1.1. Utilities.
4.2.1.2. Protection of Underground Facilities.
4.2.2. (Intentionally Left Open)
4.2.3. Construction Schedule.
4.2.4. Unfavorable Construction Conditions.
4.2.5. Clean-Up Operations.

4.3. **Temporary Facilities.**
4.3.1. Water.
4.3.2. Power.
4.3.3. Maintenance of Traffic.
4.3.4. Barricades and Lights.
4.3.5. Protection of Public and Private Property.
4.3.6. Tree Protection.
4.3.7. Dust Control.
4.3.8. Temporary Drainage Provisions.
4.3.9. Erosion Control.
4.3.10. Pollution Control.

4.4. **Materials for Sewer and Water Projects.**
4.4.1. General.
4.4.1.1. Concrete.
4.4.1.1.1. Class A Concrete.
4.4.1.1.1.1. Reinforcing Steel.
4.4.1.1.2. Class B Concrete.
4.4.1.2. Forms.
4.4.2. **Materials for Gravity Sewers.**
4.4.2.1. Pipe for Gravity Sewers.
4.4.2.1.1. Plastic Pipe.
4.4.2.1.1.1. Polyvinyl Chloride (PVC) Pipe.
4.4.2.1.1.1.1. PVC Profile Pipe.
4.4.2.1.1.1.1.1. PVC Open Profile Pipe.
4.4.2.1.1.1.1.2. PVC Closed Profile Pipe.
4.4.2.1.1.1.2. Water-Grade PVC Pipe.
4.4.2.1.1.2. Polyethylene (PE) Pipe.
4.4.2.1.2. Vitrified Clay Pipe (VCP).
4.4.2.1.3. Ductile Iron Pipe (DIP).
4.4.2.1.4. Reinforced Concrete Pipe.
4.4.2.1.4.1. Portland Cement.
4.4.2.1.4.2. Aggregate.

4.4.2.1.4.3. Steel Reinforcement.
4.4.2.1.4.4. Lift Holes.
4.4.2.1.4.5. Joints.
4.4.2.1.4.6. Absorption Limit.
4.4.2.1.4.7. Markings.
4.4.2.1.5. Non-Shear Pipe Couplings.
4.4.2.2. Manholes.
4.4.2.2.1. General.
4.4.2.2.2. Manhole Bases.
4.4.2.2.3. Manhole Tops.
4.4.2.2.4. Manhole Barrels.
4.4.2.2.5. Manhole Gaskets and Boots.
4.4.2.2.6. Manhole Sealants.
4.4.2.2.7. Castings.
4.4.2.2.8. Steps.
4.4.3. **Material for Pressure Sewers.**
4.4.3.1. General.
4.4.3.2. Force Main Pipe and Fittings.
4.4.3.2.1. Polyvinyl Chloride (PVC).
4.4.3.2.1.1. Locator Wire and Signs.
4.4.3.2.2. Ductile Iron.
4.4.3.2.2.1. Pipe Joints.
4.4.3.2.2.2. Pipe Fittings.
4.4.3.2.3. High Density Polyethylene (HDPE) Pipe.
4.4.3.2.3.1. HDPE Fittings.
4.4.3.2.3.2. Joining of HDPE.
4.4.3.2.3.3. Locator Wire and Signs.
4.4.3.2.4. (Intentionally Left Open)
4.4.3.2.5. Valves.
4.4.3.2.5.1. Gate Valves.
4.4.3.2.5.2. Plug Valves.
4.4.3.2.5.3. Check Valves.
4.4.3.2.5.4. Air/Vacuum Valves.
4.4.3.3. Pump Station Specifications (separate packet).
4.4.4. **Materials for Water Mains.**
4.4.4.1. Water Pipes.
4.4.4.1.1. Ductile Iron.
4.4.4.1.1.1. D.I.P Joints.
4.4.4.1.1.2. D.I.P Fittings.
4.4.4.1.2. Polyvinyl Chloride (PVC).
4.4.4.1.2.1. Locator Wire and Signs.
4.4.4.1.3. Prestressed Concrete Cylinder Pipe.
4.4.4.1.4. Copper.
4.4.4.1.4.1. Fittings for Service Lines.
4.4.4.2. Valves.
4.4.4.2.1. Gate Valves.
4.4.4.2.2. Butterfly Valves.
4.4.4.2.3. Air Release Valves.
4.4.4.2.4. Tapping Valves.
4.4.4.2.5. Tapping Sleeves or Saddles.
4.4.4.3. Valve Markers.
4.4.4.4. Fire Hydrants.
4.4.4.5. Flush Hydrants.
4.4.5. **Materials for Storm Sewers.**

4.4.5.1. Pipe for Storm Sewers.
4.4.5.1.1. Ductile Iron Pipe (DIP).
4.4.5.1.1.1. Coatings and Linings.
4.4.5.1.1.2. Joints.
4.4.5.1.1.2.1. Slip Joints.
4.4.5.1.1.2.2. Mechanical Joints.
4.4.5.1.1.3. Fittings.
4.4.5.1.1.4. Markings.
4.4.5.1.2. High Density Polyethylene Pipe.
4.4.5.1.2.1. Joints.
4.4.5.1.2.2. Gaskets.
4.4.5.1.2.3. Nominal Pipe Stiffness.
4.4.5.1.2.4. Markings.
4.4.5.1.3. Polyvinyl Chloride (PVC) Pipe.
4.4.5.1.3.1. Joints.
4.4.5.1.3.2. Gaskets.
4.4.5.1.3.3. Markings.
4.4.5.1.4. Reinforced Concrete Pipe.
4.4.5.1.4.1. Portland Cement.
4.4.5.1.4.2. Aggregate.
4.4.5.1.4.3. Steel Reinforcement.
4.4.5.1.4.4. Lift Holes.
4.4.5.1.4.5. Joints.
4.4.5.1.4.6. Absorption Limit.
4.4.5.1.4.7. Markings.
4.4.5.1.5. Spiral Rib (Type I.R.) Metal Pipe (SRP).
4.4.5.1.5.1. Nominal Pipe Wall Thickness.
4.4.5.1.5.2. Joints.
4.4.5.1.5.3. Gaskets.
4.4.5.1.5.4. Installation.
4.4.5.1.5.5. Markings.
4.4.5.2. Precast and Cast-In-Place Box Culverts.
4.4.5.3. Open Channels.
4.4.5.4. Detention Ponds and Dams.
4.4.5.5. Storm Sewer Manholes, Inlets, and Catch Basins.
4.4.5.5.1. Storm Sewer Structures.
4.4.5.5.1.1. Cast-In-Place Storm Sewer Structures.
4.4.5.5.1.2. Precast Storm Sewer Manholes.
4.4.5.5.1.3. Precast Concrete Inlets and Catch Basins.
4.4.5.5.1.4. Concrete Bases, Inverts, and Flow Channels.
4.4.5.5.1.5. Adjustment of Frames and Covers.
4.4.5.5.1.5.1. Precast Manhole Adjusting Rings.
4.4.5.5.1.5.2. Precast Concrete Box Inlets and Spacers.
4.4.5.5.1.6. Castings, Frames, and Covers.
4.4.5.5.1.7. Manhole and Inlet Dimensions.
4.4.5.6. Steps.
4.4.5.7. Sewer Pipe to Storm Structure Connections.
4.4.5.8. Rejection of Precast Storm Structure Sections.

4.5. **Installation of Sanitary, Water, and Storm Mains.**
4.5.1. General.
4.5.1.1. Protection of the Site.
4.5.1.2. Trench Excavation.
4.5.1.2.1. Classification of Excavated Materials.

4.5.1.2.1.1. Earth Excavation.
4.5.1.2.1.2. Rock Excavation.
4.5.1.2.1.2.1. Rock Excavation for Placing Pipe.
4.5.1.2.1.2.2. Rock Excavation for Structures.
4.5.1.2.1.2.3. Blasting.
4.5.1.2.1.2.3.1. General.
4.5.1.2.1.2.3.2. Blasting Consultant.
4.5.1.2.1.2.3.3. Permits and Applicable Standards.
4.5.1.2.1.2.3.4. Blasting Plan.
4.5.1.2.1.2.3.5. Blasting Procedures.
4.5.1.2.1.2.3.6. Blast Monitoring.
4.5.1.2.1.2.3.7. Preblast Survey.
4.5.1.2.1.2.3.8. Postblast Survey.
4.5.1.2.1.2.4. Rock Excavation Pay Limits.
4.5.1.2.2. Stockpiling of Excavated Materials.
4.5.1.2.3. Disposal of Excess Excavated Materials.
4.5.1.2.4. Unauthorized Excavation.
4.5.1.2.5. Sheeting and Shoring.
4.5.1.2.6. Removal of Water.
4.5.1.2.7. Trench Maintenance.
4.5.1.3. Boring or Tunneling.
4.5.1.4. Bedding.
4.5.1.4.1. Beneath Pipe.
4.5.1.4.2. Beneath Structures.
4.5.1.5. Laying of Pipe.
4.5.1.6. Backfill.
4.5.1.6.1. Beneath Pavements, Surfacing and Driveways.
4.5.1.6.2. Under Highway Shoulders; Under Fills and Embankments.
4.5.1.6.3. In Unimproved Areas.
4.5.1.6.4. Around Structures.
4.5.1.7. Vertical Separation Between Utilities.
4.5.1.8. Horizontal Separation Between Utilities.
4.5.1.9. If Impossible to Maintain Proper Vertical or Horizontal Separation.
4.5.2. **Installation of Sanitary Mains.**
4.5.2.1. Installation of Gravity Sewers.
4.5.2.1.1. Installation of Plastic Pipe.
4.5.2.1.1.1. Field-Cutting Plastic Pipe.
4.5.2.1.1.1.1. Polyvinyl Chloride (PVC) Pipe.
4.5.2.1.1.1.1.1. PVC Profile Pipe.
4.5.2.1.1.1.2. Polyethylene (PE) Pipe.
4.5.2.1.1.2. Bedding and Backfill for Plastic Pipe.
4.5.2.1.1.2.1. PVC Pipe.
4.5.2.1.1.2.2. PE Pipe.
4.5.2.1.2. Installation of Vitrified Clay Pipe (VCP).
4.5.2.1.2.1. Bedding and Backfill for VCP.
4.5.2.1.3. Installation of Ductile Iron Pipe (DIP).
4.5.2.1.3.1. Field-Cutting DIP.
4.5.2.1.3.2. Bedding and Backfill for DIP.
4.5.2.1.4. Installation of Reinforced Concrete Pipe (R.C.P.).
4.5.2.1.4.1. Bedding and Backfill for Reinforced Concrete Pipe.
4.5.2.1.5. Service Connections.
4.5.2.1.5.1. Sanitary Laterals and Clean-outs.
4.5.2.1.5.2. Area Drains for Dumpster Pads.
4.5.2.1.6. Sewer Pipe to Manhole Connections.

4.5.2.1.7. Installation of Manholes.
4.5.2.1.7.1. Assembly of Manhole Base, Barrel, and Cone.
4.5.2.1.7.2. Installation of Table and Trough.
4.5.2.1.7.3. Installation of Manhole Steps.
4.5.2.1.7.4. Installation of Castings.
4.5.2.1.7.5. Manhole Sealants.
4.5.2.1.7.6. Cold Weather Installation of Manholes.
4.5.2.1.8. Sewer Cleaning.
4.5.2.1.9. Abandoning of Sewers.
4.5.2.2. Design and Installation of Force Mains.
4.5.2.2.1. Ductile Iron Pipe.
4.5.2.2.2. PVC Pipe.
4.5.2.2.3. High Density Polyethylene (HDPE) Pipe.
4.5.2.2.3.1. Joining of HDPE
4.5.2.2.3.2. Locator Wire
4.5.2.2.4. Force Main Fittings.
4.5.2.2.4.1. Air Release Valves.
4.5.2.2.5. Installation of Pump Stations (separate packet).
4.5.2.2.6. Installation of Wet Wells.
4.5.2.2.6.1. Pre-cast Wet Well Structures.
4.5.2.2.6.2. Poured-in-place Wet Well Structures.
4.5.2.2.6.3. Wet Well Sealants.
4.5.2.3. Design and Installation of Inverted Siphons.
4.5.2.4. Cured in Place Pipe (CIPP).
4.5.2.5. Pipe Bursting.
4.5.3. **Installation of Water Mains.**
4.5.3.1. General.
4.5.3.1.1. Maintaining Existing Water Services.
4.5.3.1.2. Inspection Before Installation.
4.5.3.1.3. Cleaning of Pipe and Fittings.
4.5.3.1.4. Bell Ends to Face Direction of Laying.
4.5.3.1.5. Permissible Deflection at Joints.
4.5.3.1.6. Crossing Existing Utilities.
4.5.3.1.7. Dead-End Water Mains.
4.5.3.2. Installation of Pipe.
4.5.3.2.1. Installation of Ductile Iron Pipe (DIP).
4.5.3.2.1.1. Push-On Joints.
4.5.3.2.1.2. Mechanical Joints.
4.5.3.2.1.3. Bedding and Backfill for DIP.
4.5.3.2.1.4. Field-Cutting DIP.
4.5.3.2.1.5. Different Metallic Pipe Materials.
4.5.3.2.2. Installation of PVC Pipe.
4.5.3.2.2.1. Field-Cutting PVC Pipe.
4.5.3.2.2.2. Bedding and Backfill for PVC Pipe.
4.5.3.2.2.2.1. PVC Pipe 6" and Larger in Diameter.
4.5.3.2.2.2.2. PVC Pipe Less Than 6" in Diameter.
4.5.3.2.3. Installation of Prestressed Concrete Cylinder Pipe.
4.5.3.3. Installation of Fire Lines.
4.5.3.4. Installation of Fittings and Appurtenances.
4.5.3.4.1. Thrust Restraint.
4.5.3.4.1.1. Thrust Blocks.
4.5.3.4.1.2. Restrained Joints.
4.5.3.4.2. Installation of Hydrants.
4.5.3.4.3. Installation of Flush Hydrants.

4.5.3.4.4. Installation of Valves.
4.5.3.4.5. Installation of Line Valves.
4.5.3.4.6. Installation of Tapping Valves.
4.5.3.4.7. Installation of Air Release Valves.
4.5.3.4.8. Installation of Valve Boxes.
4.5.3.4.9. Installation of Valve Markers.
4.5.3.5. Filling, Sterilization, and Flushing of Water Mains.
4.5.3.5.1. Filling, Sterilization, and Flushing Procedure.
4.5.3.6. Service Connections.
4.5.3.7. Installation of Domestic Meter, Yoke, and Pit.
4.5.4. **Installation of Storm Sewers.**
4.5.4.1. Line and Grade.
4.5.4.2. Laying of Pipe.
4.5.4.2.1. Laying of Pipe in Cold Weather.
4.5.4.2.2. Unstable Soil Conditions.
4.5.4.2.3. Dewatering and Control of Surface Water.
4.5.4.3. Bedding for Storm Sewers.
4.5.4.3.1. Beneath Pipe.
4.5.4.3.2. Beneath Structures.
4.5.4.4. Backfill for Storm Sewers.
4.5.4.4.1. Backfill over Pipes.
4.5.4.4.1.1. Primary Backfill.
4.5.4.4.1.2. Secondary Backfill.
4.5.4.4.2. Backfill around Structures.
4.5.4.5. Installation of Storm Structures.
4.5.4.5.1. Installation of Cast-In-Place Storm Structures.
4.5.4.5.2. Installation of Precast Storm Sewer Manholes.
4.5.4.5.3. Installation of Precast Concrete Inlets and Catch Basins.
4.5.4.6. Separation between Utilities.
4.5.4.7. Abandoning of Sewers.
4.5.4.8. Deflection Testing.
4.5.5. **Concrete Mixing and Placing.**
4.5.5.1. Cold Weather Concrete.
4.5.6. **Street Cut Repairs.**
4.5.6.1. General.
4.5.6.1.1. Cutting Street Opening.
4.5.6.1.2. Preparing the Trench for Paving.
4.5.6.2. Paving.
4.5.6.2.1. City of Bloomington Requirements.
4.5.6.2.1.1. Asphalt Street Repair.
4.5.6.2.1.2. Concrete Street Repair.
4.5.6.2.1.3. Temporary Street Repair.
4.5.6.2.1.4. Temporary Winter Patches.
4.5.6.2.2. Monroe County Requirements.
4.5.6.2.2.1. Asphalt Shoulder Repair.
4.5.6.2.2.2. Asphalt Pavement Repair.
4.5.7. **Miscellaneous Restoration and Clean-Up.**
4.5.8. **Testing of Sewer and Water Mains.**
4.5.8.1. Testing of Sewer Mains.
4.5.8.1.1. Testing of Gravity Sewers.
4.5.8.1.1.1. Exfiltration test.
4.5.8.1.1.2. Air Pressure Test.
4.5.8.1.1.3. Vacuum Test.
4.5.8.1.1.3.1. Vacuum Test for Manholes.

4.5.8.1.1.3.2. Vacuum Test for Sewer Pipes.
4.5.8.1.1.4. Deflection Test.
4.5.8.1.1.5. Smoke Test.
4.5.8.1.1.6. Television Inspection.
4.5.8.1.2. Testing of Force Mains.
4.5.8.1.2.1. AWWA Standard C600, Latest Update.
4.5.8.1.2.2. AWWA Standard C605, Latest Update.
4.5.8.1.3. Testing of Wet Wells.
4.5.8.2. Testing of Water Mains.
4.5.8.2.1. Pressure and Leakage Test.
4.5.8.2.1.1. Procedure.
4.5.8.2.2. Purification Test.
4.5.8.2.2.1. Rechlorination Procedures.

4. CONSTRUCTION SPECIFICATIONS FOR SANITARY, WATER, AND STORM PROJECTS.

4.1. SCOPE.

4.1.1. DESCRIPTION. These specifications are based on the Indiana Water Pollution Control Board Article 327 IAC and the Ten States Standards for sewer and water. They describe the procedures, methods and materials for installing gravity sewers, pressure sewers, water mains, and storm sewers, together with all necessary appurtenances and surface restoration. They are intended in specific for all sewer or water projects of the City of Bloomington Utilities Department, and shall supercede all other specifications for any sanitary, water, or storm construction taking place within the jurisdictional area of the City of Bloomington Utilities Department.

4.1.2. ORDER OF PRECEDENCE. These specifications are to be considered an integral part of the Construction Contract and shall be deemed to be inserted therein. The Construction Contract shall be read and enforced as though these specifications were included verbatim. Wherein conflicts of language are encountered between these Specifications and the other parts of the Contract Documents, the component part first enumerated shall govern over any other component part which follows it in this Order of Precedence:

1. Construction Contract
2. Addenda
3. Special Conditions
4. Supplementary Conditions
5. Construction Specifications
6. Contract Drawings
7. General Conditions
8. Standard Drawings
9. Instruction to Bidders
10. Advertisement for Bids
11. Contractor's Proposal (Bid Form)

4.1.3. LIMITS OF WORK. The Work shall be prosecuted entirely within the limits of right-of-way of the various roads, highways, and easements, as indicated on the drawings and on file in the office of the County Recorder. If soil conditions or other conditions should make it necessary to provide sheeting, shoring, or special excavation procedures, in order to confine the Work within the prescribed limits, the Contractor will be required to provide such protective measures at his own expense.

4.1.3.1. ON PRIVATE PROPERTY. Unless otherwise stated in the Contract Documents, easements across private property have been obtained when necessary by the Owner and are indicated on the drawings. The Contractor shall be responsible for determining the easements in the field and for setting stakes as he considers necessary to mark the boundaries.

The Contractor shall not enter, for any purpose, any private property outside the designated construction easement boundaries without written permission from the owner and the tenant of the property. This shall include, but not be limited to, delivery of pipe and materials, storage of equipment and materials, and storage of materials excavated from the trench.

4.1.3.2. WORK WITHIN STATE HIGHWAY AND RAILROAD RIGHT-OF-WAY. Unless otherwise stated in the Contract Documents, permits shall be obtained by Owner. All Work performed, and all operations of Contractor, his employees or Subcontractors, within the limits of railroad and highway rights-of-way, shall be in conformity with the requirements and be under the control (through the Owner) of the railroad or highway authority owning, or having jurisdiction over and control of, the right-of-way in each case.

4.1.3.3. ROAD CUT PERMITS. Unless otherwise stated in the Contract Documents, the Owner shall obtain permission for construction within the rights-of-way of the City and County roads; however, the Contractor shall be responsible for obtaining necessary permits from the City and County to cut any of their streets or curbs. The Contractor should be aware that some streets are designated "no-cut" streets, and should consult with the City or County Engineer concerning these. Street replacement and site restoration shall be approved by the appropriate agency before final acceptance of the job.

4.2. **PROJECT REQUIREMENTS.**

4.2.1. NOTIFICATION PROCEDURES. The Indiana Underground Utility Facilities Damage Prevention Act has been in effect since January 1, 1991. This law requires the Contractor, at least two working days before start of construction, to call the Indiana Underground Plant Protection Service (I.U.P.P.S.), commonly referred to as Holey Moley, 1-800-382-5544, and request location and marking of underground facilities in the construction area. Contractor shall also give at least forty-eight (48) hours notice to the agencies and persons indicated in the section of this Contract titled "Notification."

4.2.1.1. UTILITIES. The Owner shall notify all utilities of the extent of the project and shall indicate approximate locations of these utilities on the drawings. However, it is the responsibility of the Contractor to request field-marking of all utilities, as directed in Paragraph 4.2.1., well in advance of the start of construction, and compare field markings with utility locations indicated on the plan drawings. Contractor shall notify design engineers of any discrepancies and request correction of the plan drawings. Contractor shall give all utilities at least two (2) working days advance notice of the date of the start of construction to insure that all concerned utilities have the necessary time and access to locate and protect their facilities and to provide inspection during construction. Some utilities which must be notified are: gas, telephone, electric, cable TV, water, sanitary sewer, and storm sewer.

4.2.1.2. PROTECTION OF UNDERGROUND FACILITIES. Contractor shall observe Indiana Code 8-1 Chapter 26 (Damage to Underground Facilities) both prior to and during all excavation. Contractor shall be aware that IC 8-1-26-20 Section 2 states: *"If the clearance is less than two (2) feet, exposure of the underground facility may be accomplished only by the use of hand excavation, air cutting, or vacuum excavation."* The "hand digging" zone is two (2) feet each side of the mark or line indicated by marks or flags, if the size of the underground facility is not indicated. Otherwise, the "hand digging" zone is two (2) feet on each side of the structure.

4.2.2. (Intentionally Left Open)

4.2.3. CONSTRUCTION SCHEDULE. Before construction begins, a construction schedule shall be submitted estimating completion dates for the various portions and items of Work and number of crews or manpower on the job at various periods. This schedule must be posted and kept up to date. The Contractor shall submit a tentative Work schedule with his bid.

4.2.4. UNFAVORABLE CONSTRUCTION CONDITIONS. During unfavorable weather, or when unsuitable construction conditions are encountered, the Contractor shall confine his operations to Work which will not be affected adversely by such conditions. No portion of the Work shall be performed under conditions which would affect adversely the quality or efficiency thereof, unless special means or precautions are taken by the Contractor to perform the Work in a proper and satisfactory manner.

4.2.5. CLEAN-UP OPERATIONS. The entire project site shall be thoroughly cleaned by the Contractor at the completion of the Work or portions thereof. Clean-up operations at a minimum shall consist of the removal and disposal of all broken concrete, wood scraps, wire, packaging materials, forms, scaffolds, and other objectionable rubble created during construction operations. Clean-up shall also consist of washing and scrubbing areas which are dirtied by mud, sewage, oil, grease and dust, in order to return such areas to a clean and finished appearance.

4.2.5.1. DAILY CLEAN - UP. During construction the Contractor shall clean up all construction areas at the end of each working day. This clean-up operation shall include, but not be limited to, the collection and disposition of all material to be discarded, the removal of excavated material from any roadway, walk, or driveway, the disposal of all flammable materials, and the storage of construction tools, equipment, and unused construction materials in their proper storage place.

4.3. **TEMPORARY FACILITIES.**

4.3.1. WATER. All water required for and in connection with the Work to be performed and for any specified tests of piping, equipment, devices, etc., for inundation or settling of backfill material or for any other use as may be required for proper completion of the Work shall be provided by, and at the expense of, the Contractor. The only exception shall be the filling and flushing of water mains in accordance with 4.5.3.5.1. No separate payment for water used or required will be made and all costs in connection therewith shall be included in the other items.

4.3.2. POWER. Contractor shall provide all power for heating, lighting, operation of Contractor's plant or equipment, or for any other use by Contractor.

4.3.3. MAINTENANCE OF TRAFFIC. Contractor shall conduct his Work to minimize interference with public travel, whether vehicular or pedestrian. Contractor shall provide a Traffic Maintenance Plan in accordance with the Manual of Uniform Traffic Control Devices (MUTCD) which must be approved by the agency having jurisdiction. Whenever it is necessary to cross, obstruct, or close roads and driveways, whether public or private, Contractor shall provide and maintain suitable and safe bridges, detours, or other temporary expedients for the accommodation of public and private travel, and shall give reasonable notice to owners of private drives before interfering with them. Such maintenance of traffic will not be required when Contractor has obtained permission from the owner and tenant of private property, or from the authority having jurisdiction over public property involved, to obstruct traffic at the designated point.

In making open-cut road crossings, Contractor shall not block more than one-half of the road at a time. The Contractor shall furnish all flagmen, barricades, flashing lights, signs, and other protective devices to insure the safety of all vehicular and pedestrian traffic. Whenever possible, Contractor shall widen the shoulder on the opposite side to facilitate traffic flow. Temporary surfacing shall be provided as necessary on shoulders.

4.3.4. BARRICADES AND LIGHTS. All roads, highways, and other public thoroughfares which are closed to traffic shall be protected by effective barricades on which shall be placed acceptable warning signs. Barricades shall be located at the nearest intersecting public highway or road on each side of the blocked section.

All open trenches and other excavations shall have suitable barricades, signs, and lights to provide adequate protection to the public. Obstructions such as material piles and equipment shall be provided with similar warning signs and lights.

All barricades and obstructions shall be illuminated with warning lights from sunset to sunrise. Material storage and conduct of Work on or alongside public roads and highways shall cause minimal obstruction and inconvenience to the traveling public.

All barricades, signs, lights and other protective devices shall be installed and maintained in conformity with the requirements of the appropriate jurisdictional agency. All Work within the rights-of-way of any primary or secondary streets within the City shall be protected with flagmen, barricades, flashing lights, signs and other devices as required by the Indiana Department of Transportation. Work within the rights-of-way of all other streets shall be protected by flagmen, barricades, flashing lights, signs and other devices as required by the Utilities Engineer, City Engineer, County Engineer or their agents.

4.3.5. PROTECTION OF PUBLIC AND PRIVATE PROPERTY. Contractor shall observe Indiana Code 8-1 Chapter 26 (Damage to Underground Facilities) both prior to and during all excavation. Contractor shall protect, shore, brace, support and maintain all underground pipes, conduits, drains, and other underground construction uncovered or otherwise affected by his construction operations. All pavement, surfacing, driveways, utility poles, guy wires, fences and other surface structures affected by construction operations, shall be restored to their original condition. All replacements shall be made with new materials and under the supervision of the authority having jurisdiction.

Contractor shall be responsible for all damage to streets, roads, highways, shoulders, ditches, embankments, culverts, bridges, and other public or private property, regardless of location or character, which may be caused by transporting equipment, materials, or men from the Work or any part of the site thereof, whether by him or his Subcontractors. Contractor shall make satisfactory and acceptable arrangements with the owners of, or the agency of authority having jurisdiction over, the damaged property concerning its repair or replacement or payment of costs incurred in connection with the damage.

4.3.6. TREE PROTECTION. Trees and vegetation which must be removed to perform the Work shall be moved and disposed of by the Contractor; however, all other trees and vegetation shall be protected against injury from construction operations.

Contractor shall take extra measures to protect trees, such as erecting barricades, trimming to prevent damage from construction equipment, and installing pipe or other Work by means of hand excavation or tunneling methods. Such trees shall not be endangered by stockpiling excavated material within the dripline or storing equipment against the trunk.

4.3.7. DUST CONTROL. Contractor shall take reasonable measures to prevent unnecessary dust. Earth surfaces subject to dusting shall be kept moist with water or by application of an approved chemical dust inhibitor. Dusty materials in piles or in transit shall be covered when practical to prevent blowing.

Buildings or operating facilities which may be affected adversely by dust shall be adequately protected from dust. Machinery, motors, instrument panels, and similar equipment shall be included with dust screens.

4.3.8. TEMPORARY DRAINAGE PROVISIONS. Contractor shall provide for the drainage of stormwater and such water as may be applied or discharged on the site in the performance of the Work. Drainage facilities shall be adequate to prevent damage to the Work, the site, and adjacent property.

Existing drainage channels and conduits shall be cleaned, enlarged, or supplemented as necessary to carry all increased run-off attributable to Contractor's operations. Dikes shall be constructed as necessary to divert increased run-off from entering adjacent property (except in natural channels) to protect the Work, and to direct water to drainage channels or conduits.

Ponding shall be provided as necessary to prevent downstream flooding.

4.3.9. EROSION CONTROL. Contractor shall prevent erosion of soil on site and adjacent property resulting from his construction activities. Contractor's Erosion Control Plan must be approved by either the City or County Engineer, depending on jurisdiction. Effective measures shall be initiated prior to the commencement of clearing, grading, excavation, or other operation that will disturb the natural protection.

Work shall be scheduled to expose areas subject to erosion for the shortest possible time, and natural vegetation preserved to the greatest extent practicable. Temporary storage and construction buildings shall be located, and construction traffic routed, so as to minimize erosion. Temporary fast-growing vegetation or other suitable ground cover shall be provided as necessary to control run-off.

4.3.10. POLLUTION CONTROL. Contractor shall prevent the pollution of drains and water courses by sanitary wastes, debris, and other substances resulting from construction activities. No sanitary wastes will be permitted to enter any drain or watercourse other than sanitary sewers. No sediment, debris, or other substance will be permitted to enter sanitary sewers and reasonable measures will be taken to prevent such materials from entering any drain or watercourse.

4.4. **MATERIALS FOR SANITARY, WATER, AND STORM PROJECTS.**

4.4.1. GENERAL.

4.4.1.1. CONCRETE. Portland cement concrete shall be composed of Portland cement, fine and coarse aggregates, and water, proportioned and mixed as required to produce a smooth, workable mixture, and shall be designated by classes according to compressive strength. It shall have a minimum ultimate compressive strength for each class as determined by testing 6" X 12" cylinder samples of concrete in accordance with the requirements of the latest revision of ASTM C39, Standard Method of Test for Compressive Strength of Molded Concrete Cylinders. The aggregate shall be well-graded with a maximum size such that 100% passes a two-inch (2") mesh screen, unless otherwise specified.

4.4.1.1.1. CLASS A CONCRETE. Class A concrete shall have a 28-day compressive strength of 4,000 psi, and is intended for reinforced structures designed for strength and non-permeability. Unless otherwise specified, all reinforced concrete shall be Class A.

4.4.1.1.1.1. REINFORCING STEEL. Reinforcing steel shall conform to the latest revision of ASTM A615. Unless otherwise specified, bars for concrete reinforcement shall be deformed billet steel, grade 40 or 60.

4.4.1.1.2. CLASS B CONCRETE. Class B concrete shall have a 28-day compressive strength of 2,000 psi, and is intended principally for pipe cradles or encasements, for backfill of unauthorized excavation, and for locations where lower-strength concrete is indicated.

4.4.1.2. FORMS. Forms shall be used, whenever necessary, to confine the concrete and shape it to the required lines. All exposed concrete surfaces having slopes steeper than two (horizontal) to one (vertical) shall be formed. The forms shall have sufficient strength and rigidity to hold the concrete and withstand the necessary pressure, tamping, and vibration without deflecting from prescribed lines.

Surfaces of all forms in contact with the concrete shall be clean, rigid, tight, and smooth. Forms treated to prevent bond shall be coated with an approved compound which is not harmful to the concrete and which will nor discolor the finished surface.

Unless otherwise specified, forms for concrete surfaces that will be exposed to view shall be waterproof plywood, press board, or metal. Exposed edges and corners of concrete on the outside or inside of structures shall be chamfered at 45 degrees, such level being one inch (1") on a side unless otherwise specified.

4.4.2. **MATERIALS FOR GRAVITY SEWERS.** This section describes the materials to be used in construction of gravity sewers, including sewer pipe, manholes, castings, and other fittings and appurtenances.

4.4.2.1. PIPE FOR GRAVITY SEWERS.

4.4.2.1.1. PLASTIC PIPE. This subsection specifies the materials for gravity sewer pipe made of polyvinyl chloride or polyethylene plastic.

4.4.2.1.1.1. POLYVINYL CHLORIDE (PVC) PIPE. PVC gravity sewers 4"-15" in diameter shall conform to the latest revision of ASTM D-3034 SDR 35. The pipe shall be made of PVC having a

minimum cell classification of 12454-B, 12454-C, or 12364-C. Fittings for these diameters of PVC pipe shall also conform to the latest revision of ASTM D-3034 SDR 35 with a minimum cell classification of 12454-B, 12454-C, or 12364-C. Pipe shall have a minimum tensile strength of 34.50 Mpa as defined in ASTM D-1784. Tees and wyes for pipe up to 18" in diameter for service connections shall be factory-made in-line fittings.

PVC gravity sewer pipe 18"-27" in diameter shall conform to the latest revision of ASTM F-679. The pipe shall be made of PVC having a minimum cell classification of 12454-C or 12364-C. Fittings for F-679 PVC pipe shall also conform to the latest revision of ASTM D-3034 SDR 35 with a minimum cell classification of 12454-C or 12364-C. Pipe shall have a minimum tensile strength of 34.50 Mpa as defined in ASTM D-1784. Tees and wyes for pipe greater than 18" in diameter shall be either factory-made in-line fittings, Romac Industries “CB” sewer saddle, or Inserta-tees if Utilities Engineer permits.

All joints shall be of the elastomeric gasket type meeting ASTM F 477 and installed per the manufacturer's recommendations. Solvent cement joints shall not be used.

All pipe shall be provided with home marks to insure proper gasket seating. The home mark shall be situated so that, on a seated pipe, it is within one-half inch of the bell end of the previous pipe.

All pipe sections and fittings shall be clearly marked to indicate their conformity with the ASTM specifications.

4.4.2.1.1.1.1. PVC PROFILE PIPE. All PVC profile pipe shall meet ASTM F794. PVC profile pipe is separated into two categories, open profile pipe and closed profile pipe. The former is strengthened by some type of external ribs, I-beams, or corrugations. The latter, in addition to such ribs or I-beams, has an additional external wall.

4.4.2.1.1.1.1.1. PVC OPEN PROFILE PIPE. PVC open profile pipe shall be J-M PERMA-LOC, ETI ULTRA RIB or CONTECH A-2000 pipe, or pre-approved equivalent, and shall include all pipe diameters produced by each manufacturer. ETI ULTRA RIB may only be used in certain applications and requires written permission of the Utilities Engineer.

Unless approval to the contrary is given by the Utilities Engineer, all fittings as noted on the plans shall be factory-made by the pipe manufacturer of material which conforms to the same specifications as the pipe material.

4.4.2.1.1.1.1.2. PVC CLOSED PROFILE PIPE. All large diameter PVC closed profile pipe shall be in accordance with ASTM F 1803 and shall be LAMSON VYLON pipe or pre-approved equivalent. Only pipe diameters of 21 through 48 inches may be used without written approval of the Utilities Engineer.

Unless approval to the contrary is given by the Utilities Engineer, all fittings as noted on the plans shall be factory-made by the pipe manufacturer of material which conforms to the same specifications as the pipe material.

4.4.2.1.1.1.2. WATER-GRADE PVC PIPE. In certain conditions, use of water-grade PVC pipe meeting AWWA Standard C900 may be required for gravity sewers with diameters of 8" to 12". For diameters of 14" to 24", pipe meeting AWWA Standard C905 may be required. Wyes for pipe diameters 8″ through 12″ shall be HARCO (www.harcofittings.com), sized for C900 on the run and SDR-35 on the branch. Larger diameter pipe shall use C900 tees; the lateral may transition to SDR-35 PVC pipe by using a properly sized HARCO C900 to SDR-35 Adapter.

4.4.2.1.1.2. POLYETHYLENE (PE) PIPE. PE pipe may be used for gravity sewers with diameters between 18" and 60". The pipe material shall conform to the latest revision of ASTM D-1248 Standard Specification for Polyethylene Plastics Molding and Extrusion Materials, Type II, Class C, Category 5,

Grade P-34 and shall be Spirolite brand as manufactured by the Spirolite Corporation, a division of Chevron Company. Any other brand must be approved by the Engineer prior to the bid date.

All joints used with PE pipe must be bell and spigot type with a gasket designed to meet the latest revision of ASTM C-443.

Any special fittings as noted on the plans shall be made with material which conforms to the same specifications as the pipe material.

4.4.2.1.2. VITRIFIED CLAY PIPE (VCP). VCP is NOT an approved material for construction of sanitary sewers within the City of Bloomington jurisdictional area without the express written approval of the Utilities Engineer. VCP shall be manufactured of surface clay, fire clay, shale, or a combination of these materials as specified in the ASTM Specifications. Unless otherwise specified in the Special Conditions or the Drawings, double-strength clay pipe as described in ASTM C-700 shall be used. Pipe shall be free from fracture, large or deep cracks, and surface roughness. The planes at the ends of the pipe shall be perpendicular to the longitudinal axis.

All pipe joints must meet the requirements of ASTM C-425. A PVC or Fiberglas collar instead of a clay bell may be used, but must also conform to ASTM D-1784, Class 12454-B. The type of joint to be used (plain mortar, cement hump, plastic, hot-poured, or any other) shall be submitted to the Engineer for his approval.

All pipe sections and fittings shall be marked as required by the ASTM Specifications.

4.4.2.1.3. DUCTILE IRON PIPE (DIP). Where it is impossible to maintain minimum cover over pipe, Ductile Iron Pipe with an especially resistant lining may be required. DIP shall be manufactured in accordance with the latest revision of ANSI A21.51 and AWWA C151. For sanitary sewer application, DIP shall have either a ceramic epoxy lining, minimum thickness 40 mils, and shall be **Protecto 401**, as manufactured by Induron Protective Coatings, or a calcium aluminate lining, minimum thickness 0.125 inches for 6-inch through 12-inch pipe and 0.1875 inches for 14-inch through 24-inch pipe, and shall be **SewperCoat**, as manufactured by Griffin Pipe Products Company (www.griffinpipe.com).

4.4.2.1.4. REINFORCED CONCRETE PIPE. All reinforced concrete pipe shall be Class III, IV, or V in accordance with the latest edition of ASTM C 76, wall thickness “B” or “C” as per site conditions. Pipe shall be manufactured from Portland Cement and aggregate as specified herein.

4.4.2.1.4.1. PORTLAND CEMENT. Portland Cement for manufacture of concrete pipe and fittings shall be Type I or Type III and shall conform to ASTM C 150. Upon request, the Contractor shall furnish manufacturer’s certificate stating the type of cement used in the manufacture of the pipe furnished.

4.4.2.1.4.2. AGGREGATE. Aggregate for manufacture of concrete pipe and fittings shall conform to ASTM C 33 except that the requirement for gradation shall not apply. Upon request, the Contractor shall furnish manufacturer’s certificate stating the type of aggregate used in the manufacture of the pipe furnished.

4.4.2.1.4.3. STEEL REINFORCEMENT. Steel reinforcement shall be in accordance with requirements of the applicable table in ASTM C 76. Reinforcement shall extend full into bell and spigot ends for pipes 36 inch and larger, and shall extend full into the bell of rubber gasket pipes 12 inch and larger. Elliptical reinforcement shall not be permitted. Longitudinal reinforcement shall be continuous, and all reinforcement shall have a minimum concrete cover of 1 inch.

4.4.2.1.4.4. LIFT HOLES. Lift holes shall not be permitted for concrete pipe less than 36 inches in diameter. A maximum of two lift holes may be provided for each section of reinforced concrete pipe 36 inches in diameter and larger. Lift holes shall be formed, tapered, or drilled. Lift holes shall be repaired in a clean, workmanlike manner using a conical shaped precast plug, properly sealed in place using a

non-shrink cement grout or an expanding Portland Cement mixture such as OCTOCRETE (IPA Systems, Inc.) (www.ipasystems.com) in accordance with manufacturer's application instructions. Mastic sealant shall not be used for lift hole repair.

4.4.2.1.4.5. JOINTS. Concrete pipe shall be furnished with joints using either concrete bell and spigot or zinc coated steel bell and spigot rings, or rubber seal and rings (Anderson Seal or approved equal). All types of joints shall have a groove on the spigot for a rubber "O" ring gasket. Pipe joints using concrete bell and spigot or zinc coated steel bell and spigot rings shall conform to ASTM C 361 except that the gaskets shall be as specified hereinafter. Pipe joints using rubber gaskets shall conform to ASTM C 443 so that the joint will remain watertight for all soil types and groundwater conditions. The steel bell shall be welded to the longitudinal reinforcing, and a steel skirt (minimum 5.75 inches in length and fabricated from 16 gauge metal) shall be continuously welded to the inside face of the steel spigot ring and to the longitudinal reinforcement.

Profile gasket type joints using a self-lubricated gasket (Forsheda Style 138 or approved equal) on a single offset spigot and formed bell are acceptable. Joints shall be sealed with a profile rubber gasket conforming to ASTM C 443 so that the joint will remain watertight under all conditions of service. On request, the joint shall demonstrate the ability to pass a 2 psi pressure test without leakage.

Only one style of joint system will be permitted from structure to structure in a single run of pipe.

Mastic sealer shall not be used to seal reinforced concrete pipe joints.

4.4.2.1.4.6. ABSORPTION LIMIT. Absorption by the reinforced concrete pipe shall not exceed 6% of its dry weight.

4.4.2.1.4.7. MARKINGS. The date of manufacture, class of pipe, and specification designation, size of pipe, name or trademark of the manufacturer, and identification of plant shall be legibly marked on each section of pipe per the ASTM requirement.

4.4.2.1.5. NON-SHEAR PIPE COUPLINGS**.** When connecting one cut section of pipe to another and the gasketed bell-and-spigot system cannot be used, whether pipes are of similar or dissimilar material and size, Contractor shall make this connection by utilizing an approved non-shear coupling or non-shear adapter coupling correctly sized for this purpose. Acceptable non-shear couplings are DFW non-shear coupling by NDS (www.ndspro.com), Cascade Style CSST transition clamp coupling (www.cascademfg.com), and Mission 56 Series ARC coupling. All others must be approved by the Utilities Engineer before installation. For pipes of identical size and material, Contractor may also use a sleeve type repair coupling, as manufactured by HARCO (The Harrington Corporation) (www.harcofittings.com), or prior-approved equal.

4.4.2.2. MANHOLES. Manholes shall be constructed of pre-cast concrete meeting the requirements of ASTM C-478. All manhole sections, including the cone or flat-top, shall be wet-cast; dry-cast sections are not acceptable. The following chart indicates minimum manhole diameters for sanitary sewers entering/exiting a manhole at various ranges of angles:

	MANHOLE DIAMETERS	
PIPE SIZE	Pipes Entering/ Leaving at 0-45 Degree Bend	Pipes entering/ Leaving at 45-90 Degree Bend
8"-21"	48"	48"
24"	48"	60"
27"-30"	60"	60"
33"-36"	60"	72"

Minimum manhole diameter shall also be determined by the number of pipes entering and exiting the structure, as well as pipe diameters and angles. To preserve structural integrity, there shall in no case be less than a span of six inches (6″), measured at the narrowest interval, between any two pipes connecting to a manhole. This measurement shall exclude gasket or boot width. Anything smaller than a six inch span will require written acceptance of responsibility from the manhole manufacturer, as well as written permission form the Utilities Engineer.

4.4.2.2.1. GENERAL. The Contractor shall construct all manholes at the locations and of the materials indicated on the drawings and as specified. Manholes shall be designed and constructed to have no more than one foot of fall from invert in to invert out. Greater than one foot of fall will require construction of an outside drop. During sewer design, the Design Engineer shall determine if there will be adequate vertical space to construct the outside drop of the proper diameter pipe in accordance with CBU Standard Detail #2. If he determines that there is not adequate vertical space, the Design Engineer shall adjust the slope of the incoming pipe to leave maximum one foot of fall through the manhole so that an outside drop is not required.

The Design Engineer shall also be aware that, for manholes having more than one inlet pipe, there shall be no more than 0.3 foot difference between invert elevations of the inlet pipes. This will preserve flow characteristics through the manhole and facilitate construction of table and troughs.

4.4.2.2.2. MANHOLE BASES. The manhole base and first riser section shall be one complete pre-cast unit. The invert of all pipe openings shall be at least three inches above the base slab to provide for installation of table and trough. Sewers shall enter and exit the manhole walls as indicated in the Standard Drawings. Openings for these sewers shall either be formed in the casting process, or core-drilled. Openings shall be equipped with an elastomeric gasket or boot as specified in 4.4.2.2.5.

Openings shall be provided in manholes at locations shown on the plans for future connections. All such openings shall have an approved gasket, and shall be temporarily closed by installing a short section of appropriately sized pipe and a cap or plug.

For manholes on a completely new reach of sanitary sewer, the table and trough may be cast as a part of the base unit, or constructed of masonry brick and non-shrink mortar in accordance with 4.5.2.1.7.2. with written permission of the Utilities Engineer. For replacement manholes to which one or more existing pipes must be connected, openings in the base unit shall be core-drilled on site after removing the old

structure and shooting elevations of existing pipe(s) to assure accuracy; table and trough shall be installed on site and constructed of masonry brick and non-shrink mortar in accordance with 4.5.2.1.7.2. In both cases the invert channels shall be smooth with a semi-circular bottom and vertical sides extending upward to the height of the pipe crown. In the latter case, both table and invert channel shall receive two coats of Drycon (IPA Systems, Inc.) (www.ipasystems.com). Changes of flow direction within manholes shall be made by a smooth curve having as large a radius as possible. The manhole table shall be smooth and slope towards the channel not less than one inch (1") per foot.

4.4.2.2.3. MANHOLE TOPS. Manholes six feet or more in depth shall have eccentric cone tops. Flattops shall be used if indicated on the drawings or when manhole is less than six feet deep. No brick or block shall be used to adjust the elevation of the frame and cover without permission of the Engineer. Cones or flattops shall be set so that no more than 12" of reinforced concrete rings will be required to adjust the top of the manhole casting to grade. All pre-cast tops and riser rings shall meet the requirements in the latest edition of ASTM C-478.

4.4.2.2.4. MANHOLE BARRELS. Pre-cast manhole barrels shall be reinforced concrete conforming to ASTM C-478. Joints between the barrels, between the barrels and the base unit, and between the barrels and the cone or flattop shall be sealed by using an approved rubber gasket in accordance with ASTM C-443, latest edition.

4.4.2.2.5. MANHOLE GASKETS AND BOOTS. To connect a sanitary sewer to a manhole, either a flexible boot KOR-N-SEAL 1 or 2 flexible connector (www.npc.com), cast-in-place Dura-Seal gasket (www.duratech.com), "A"-Lock or “Z”-Lok gaskets (www.a-lok.com) or an approved equal shall be used. Connections to an existing manhole shall be a flexible boot KOR-N-SEAL or approved equal (www.npc.com).

All flexible connectors shall conform to ASTM C-923, and shall be resistant to ozone, weather elements, chemicals including acids and alkalis, animal and vegetable fats, oils and petroleum products.

The stainless steel elements of the connector shall be totally non-magnetic Series 305 stainless steel. The stainless steel clamp shall be capable of sustaining applied torque in excess of eighty (80) inch-pounds.

It shall be the responsibility of the Contractor to submit details of the proposed connection to the Engineer for approval. Connections not approved by the Engineer shall be subject to removal and replacement with an approved connector.

4.4.2.2.6. MANHOLE SEALANTS. There are two acceptable methods of assuring water-tight manhole construction. Method #1 is strongly preferred; Method #2 may be used only with written permission of the Utilities Engineer. Regardless of which waterproofing method is used, Contractor shall plug all lift holes and seal all section joints both internally and externally with a non-shrink grout or an expanding Portland Cement mixture such as OCTOCRETE (IPA Systems, Inc.) (www.ipasystems.com) in accordance with manufacturer's application instructions.

Method #1: The manhole manufacturer shall give written conformation that all reinforced precast concrete manhole sections contain the inorganic copolymer waterproofing admixture IPANEX, manufactured by IPA Systems, Inc. (www.ipasystems.com), in compliance with manufacturer's dosage and mixing instructions.

Method #2: (Only with written permission of the Utilities Engineer) Before assembly, the entire outer surface of the manhole, including the underside of the manhole base, shall receive a minimum of two coats of FARBERTITE (IPA Systems, Inc.) (www.ipasystems.com) in accordance with manufacturer's application instructions. After assembly (sealing all joints between manhole sections and plugging all lift holes as indicated above), Contractor shall apply a minimum of two

coats of DRYCON (IPA Systems, Inc.) (www.ipasystems.com) to the entire manhole interior in accordance with manufacturer's mixing and application instructions.

4.4.2.2.7. CASTINGS. Manhole frames and covers shall be East Jordan Iron Works castings, catalogue number 1020 or 1022 or approved equivalent. Catalog numbers 1037 or 1050 or equivalent may be used with the permission of the Engineer. Lids shall be Gasket Seal Cover catalog number 1020A, heavy duty, or approved equivalent. The words "SANITARY SEWER" shall be cast in each manhole cover. All castings and lids shall be coated. No type of casting or cover other than East Jordan will be used unless written approval is granted by the Engineer. Castings shall be set in a nominal 1" bed (approximately 0.75"× 1.05") of sealant made of butyl rubber material in flexible rope form. Sealant shall meet all requirements of ASTM C-990 and AASHTO M-198. Sealant shall be PRO-STIK, as manufactured by Press-Seal Gasket Corporation (www.press-seal.com), or pre-approved equivalent.

4.4.2.2.8. STEPS. Manhole steps shall be polypropylene, polypropylene coated steel reinforcing, or an approved non-corrosive fiberglass material. The copolymer polypropylene shall meet the requirements of ASTM D 4101, reinforced with deformed 3/8 of an inch minimum diameter reinforcing steel conforming to ASTM A 615, Grade 60. Cast iron steps are not acceptable.

4.4.3. **MATERIAL FOR PRESSURE SEWERS.**

4.4.3.1. GENERAL. The following section governs the materials for force main pipe and fittings. Any deviation from these specifications must be approved in writing by the Utilities Engineer. All materials for sewage force mains and appurtenances shall conform to these specifications. Where particular brands or manufacturers are mentioned, the materials must be furnished as so named. If a brand is listed and followed by "or approved equal," the Contractor may substitute materials of similar quality, if approved in writing by the Utilities Engineer.

4.4.3.2. FORCE MAIN PIPE AND FITTINGS.

4.4.3.2.1. POLYVINYL CHLORIDE (PVC). PVC pressure pipe may be used in construction of force mains. Pipe shall be SDR-21 (PR200), ETI ULTRA BLUE, or C900 (DR-18).

ULTRA BLUE shall conform to ASTM F 1483, and ASTM D 2241, and shall have a cell classification of 12454-B in conformance with ASTM D 1784. The gasketed joint system shall conform to ASTM D3139. Both SDR-21 and C900 shall have a cell classification of 12454-A or 12454-B according to ASTM D1784. The minimum allowable material shall be PVC 1120. SDR-21 shall be PR200 and conform to ASTM D2241 and D3139. C900 shall have DR=18, 150 psi. All types shall have push-on joints. Solvent cement joints will not be allowed. Elastomeric gaskets shall be manufactured to conform with ASTM F477.

All fittings shall be the same material as the force main pipe. For C900, fittings may also be ductile iron in conformance with ANSI/AWWA C110/A21.10, cement-lined and coated in accordance with the latest revision of ANSI/AWWA C104/A21.4. Valves shall be as listed in 4.4.3.2.5. and following, and must be for wastewater application.

4.4.3.2.1.1. LOCATOR WIRE AND SIGNS. A #10 insulated solid copper wire shall be wrapped around the pipe so that one revolution is made at least every pipe joint. Splices are to be made with an approved connector, and are to be suitably protected against corrosion.

Where the main is laid off the road, the wire is to be brought to the surface approximately every 500 feet to an air/vacuum valve vault, a sign post, and a valve box. Where the main is laid in the street, the wire is to be brought into a valve box approximately every 500 feet. Sign post shall be furnished by the Utilities Department; valve boxes to be furnished by Contractor.

4.4.3.2.2. DUCTILE IRON. Ductile iron pipe shall be manufactured in accordance with the latest revision of ANSI A21.51 and AWWA C151. For 3-inch through 12-inch diameter DIP, Pressure Class shall be 350. For DIP with a diameter larger than 12 inches, Pressure Class shall be determined by the Utilities Engineer on a case by case basis.

For sanitary sewer application, DIP shall have either a ceramic epoxy lining, minimum thickness 40 mils, and shall be **Protecto 401**, as manufactured by Induron Protective Coatings, or a calcium aluminate lining, minimum thickness 0.125 inches for 6-inch through 12-inch pipe and 0.1875 inches for 14-inch through 24-inch pipe, and shall be **SewperCoat**, as manufactured by Griffin Pipe Products Company (www.griffinpipe.com).

4.4.3.2.2.1. PIPE JOINTS. Mechanical joints, slip or flanged joints shall be provided. Mechanical joints and accessories shall conform to AWWA C111, ANSI A21.11. Bolts and nuts shall be corrosive resistant high-strength alloy steel. Slip joints with rubber O-ring gaskets shall comply with AWWA C111, ANSI A21.11. Flanged joints shall be manufactured with laying dimensions, facing and flanges detailed in accordance with AWWA C115, ANSI A21.15.

4.4.3.2.2.2. PIPE FITTINGS. The material and construction of fittings shall be similar to those of the pipes. Fittings with mechanical joints, bell and spigot joints, and flange joints, shall conform to the dimensions and weights in accordance with the latest revisions of ANSI A21.10 and AWWA C110. Fittings shall be cement-lined and coated in accordance with the latest revision of ANSI/AWWA C104/A21.4.

4.4.3.2.3. HIGH DENSITY POLYETHYLENE (HDPE) PIPE. HDPE pipe for force main use shall be 4-inch and larger and shall have a nominal IPS (Iron Pipe Size) O.D. HDPE pipe used in open-cut installations shall have a minimum DR of 11. The pipe shall be produced from a HDPE pipe grade resin meeting the specifications of ASTM D 3350 with a minimum cell classification of 345464C. Pipe shall be made to the dimensions and tolerances specified in the latest version of ASTM F 714, Standard Specification for Polyethylene (PE) Plastic Pipe (SDR-21) Based on Outside Diameter.

4.4.3.2.3.1. HDPE FITTINGS. HDPE fittings shall be in accordance with ASTM D 3261 and shall be manufactured by injection molding, a combination of extrusion and machining, or fabrication from HDPE pipe conforming to this specification; they shall be manufactured from the same resin type and cell classification as the pipe itself. The fittings shall be fully pressure rated and provide a working pressure equal to that of the pipe with an included 2:1 safety factor.

4.4.3.2.3.2. JOINING OF HDPE. Sections of HDPE pipe shall be joined by the butt fusion process into a continuous length of pipe at the job site. The joining process shall be the heat fusion method and shall be performed in strict accordance with the pipe manufacturer's recommendations, including pipe temperature, alignment, and fusion pressure. The heat fusion equipment used in the joining procedures shall be capable of meeting all conditions recommended by the pipe manufacturer. Extrusion welding or hot gas welding of HDPE shall not be used. Mechanical joint adapters or flanges may be used to mechanically connect HDPE pipe to transition points. This joining method shall also be performed in strict accordance with the pipe manufacturer's recommendations.

4.4.3.2.3.3. LOCATOR WIRE AND SIGNS. A #10 insulated solid copper wire shall be wrapped around the pipe so that one revolution is made at least every 10 feet. Splices are to be made with an approved connector, and are to be suitably protected against corrosion.

Where the force main is laid off the road, the wire is to be brought to the surface approximately every 500 feet to an air/vacuum valve vault, a sign post, and a valve box. Where the force main is laid in the street, the wire is to be brought into a valve box approximately every 500 feet. Sign post shall be furnished by the Utilities Department; valve boxes to be furnished by Contractor.

4.4.3.2.4. (INTENTIONALLY LEFT OPEN)

4.4.3.2.5. VALVES. All valves other than air/vacuum shall be manufactured by M & H Valve Company (www.mh-valve.com), American Flow Control (www.acipco.com), Kennedy Valve Company (www.kennedyvalve.com), Mueller Company (www.muellersales.com), or U.S. Pipe and Foundry Company (www.uspipe.com).

Valves shall be for direct burial service. Valves shall be for vertical setting with two inch (2") tee wrench nut, shall open counter-clockwise, and shall have "O" ring-type packing. All valves not requiring a vault shall have two-piece cast iron valve box, Models 562-S or 662-S, as manufactured by Tyler Pipe, or approved equivalent. Valve box shall be equipped with a cast iron lid imprinted “SEWER”.

Vendor shall furnish to the Owner an affidavit of compliance with all provisions of the standard, including testing.

4.4.3.2.5.1. GATE VALVES. Gate valves shall be cast iron body, fully bronze mounted, double-disk type with non-rising stem in accordance with the latest revision of AWWA C509, and shall be designed for use in wastewater applications.

4.4.3.2.5.2. PLUG VALVES. Plug valves shall be cast iron body, eccentric type with flanged ends and designed for use in wastewater applications. Hydrostatic shell test rating shall be 350 psi and seal test rating shall be 175 psi for valves 3" through 12". Hydrostatic shell test rating shall be 300 psi and seal test rating shall be 150 psi for valves 14" and larger.

4.4.3.2.5.3. CHECK VALVES. Check valves shall be cast iron body, bronze mounted, external weight and lever arm, with flanged ends, and designed for use in wastewater applications. Hydrostatic test pressure rating shall be 350 psi and working pressure rating shall be 175 psi for check valves 2.5" through 12". Hydrostatic test pressure rating shall be 300 psi and working pressure rating shall be 150 psi for check valves 14" or larger.

4.4.3.2.5.4. AIR/VACUUM VALVES. Air/vacuum valves for force mains shall be constructed for sanitary sewer use. A Combination valve shall be installed to exhaust large quantities of air during the filling of a main and allow air to re-enter during draining or when a negative pressure occurs. An air release valve shall be installed at high points to permit small quantities of air to escape from the pipe. The inlet and outlet of the valves shall have the same cross-sectional area. The floats shall be guided by a stainless steel guide shaft and seat against a synthetic seat. Valves sized 1/2" through 3" shall have N.P.T. inlets and outlets. Valves sized 4" and larger shall be flanged inlets with plain outlets and protective hoods to prevent debris and foreign matter from entering the valves. All air/vacuum valves shall be constructed of cast iron with stainless steel trim and Buna-N seating. Valves shall be as manufactured by Val-Matic Valve and Mfg. Corp (www.val-matic.com) or approved equal.

Air/vacuum valves must be sized by the design engineer according to volume of main and maximum operating pressure. Valve size must be approved by Utilities Engineer.

Air/vacuum valves are to be installed in an air/vacuum valve vault as detailed in Standard Detail #3.

4.4.3.3. PUMP STATION SPECIFICATIONS. Specifications for pump stations, pumps, wet wells, valve pits, etc. are available in a separate packet in the office of the Utilities Engineer, 1969 South Henderson Street.

4.4.4. **MATERIALS FOR WATER MAINS.** This section describes the materials to be used in construction of water mains, including water pipe, valves, and other fittings and appurtenances. Any deviation from these specifications must be approved in writing by the Utilities Engineer.

4.4.4.1. WATER PIPES.

4.4.4.1.1. DUCTILE IRON. Ductile iron pipe shall be manufactured in accordance with the latest revision of ANSI A21.51 and AWWA C151. For 3-inch through 12-inch diameter DIP, Pressure Class shall be 350. For DIP with a diameter larger than 12 inches, Pressure Class shall be determined by the Utilities Engineer on a case by case basis.

The pipe shall be lined with an approved thin Portland Cement spun lining and a bituminous seal in accordance with the latest revision of ANSI/AWWA C104/A21.

4.4.4.1.1.1. D.I.P. JOINTS. Mechanical joints, slip or flanged joints shall be provided. Mechanical joints and accessories shall conform to the latest revision of AWWA C111, ANSI A21.11. Bolts and nuts shall be corrosive-resistant, high-strength, low alloy steel. Slip joints with rubber O-ring gaskets shall comply with AWWA C111, ANSI A21.11. Flanged joints shall be manufactured with laying dimensions, facing and flanges detailed in accordance with AWWA C115, ANSI A21.15.

4.4.4.1.1.2. D.I.P. FITTINGS. The material and construction of fittings shall be similar to those of the pipes. Fittings with mechanical joints, bell and spigot joints, and flange joints, shall conform to the dimensions and weights in accordance with the latest revisions of AWWA C110 and ANSI A21.10. Fittings shall be cement-lined and coated as stated in 4.4.4.1.1., or may be coated with a 6 to 8 mil nominal thickness fusion-bonded epoxy coating conforming to ANSI/AWWA C550 and C116/A21.16.

4.4.4.1.2. POLYVINYL CHLORIDE (PVC). PVC pipe is NOT an approved material for construction of 6" and larger water mains within the City of Bloomington water jurisdiction. In special instances the Utilities Engineer may give written permission to utilize PVC pipe in construction of water mains which are to remain private. This will be done on a case by case basis.

PVC pressure pipe may be used in construction of 2-inch or 4-inch water mains to be taken over and maintained by City of Bloomington Utilities. In such case the 2-inch pipe shall be SDR-21 (PR200), and the 4-inch pipe may be either SDR-21 (PR200) or C900 (DR-14). All service lines connecting to 2-inch PVC mains shall be 1-inch type K copper and shall connect by means of a self-tapping unit with compression connector outlet. Self-tapping unit shall be **FastTap**, as manufactured by **Continental Water Products**, or pre-approved equal. Meter setup shall be in conformance with City of Bloomington Utilities Standard Detail Number 15.

Both SDR-21 and C900 shall have a cell classification of 12454-A or 12454-B according to ASTM D1784. The minimum allowable material shall be PVC 1120. SDR-21 shall be PR200 and conform to ASTM D2241 and D3139. C900 shall have DR=14, 200 psi. Both types shall have push-on joints. Solvent cement joints will not be allowed. All fittings shall be of the type and material recommended by the manufacturer. Elastomeric gaskets shall be manufactured to conform with ASTM F477.

4.4.4.1.2.1. LOCATOR WIRE AND SIGNS. A #10 insulated solid copper wire shall be wrapped around the pipe so that one revolution is made at least every pipe joint. Splices are to be made with an approved connector, and are to be suitably protected against corrosion.

Where the main is laid off the road, the wire is to be brought to the surface approximately every 500 feet to an air valve vault, a sign post, and a valve box. Where the main is laid in the street, the wire is to be brought into a valve box approximately every 500 feet. Sign post shall be furnished by the Utilities Department; valve boxes to be furnished by Contractor.

4.4.4.1.3. PRESTRESSED CONCRETE CYLINDER PIPE. Prestressed Concrete Cylinder Pipe with I.D. 24" and larger may be used for water transmission mains requiring relatively few taps. Pipe and fittings

shall be furnished in accordance with AWWA C301. Exact pipe and fitting materials and design pressures must be approved by the Utilities Engineer.

4.4.4.1.4. COPPER. All service lines from the main to the meter shall be Type K copper with flared ends in conformance with ASTM B88. Compression or solder joints will not be allowed on any service line between the main and the meter.

4.4.4.1.4.1. FITTINGS FOR SERVICE LINES. All fittings shall be in conformance with ANSI/AWWA C800. Both corporation stops and curb stops shall be ball valve type, brass-bodied, full-port, with a Teflon coated ball. The corp stop shall have a single O-ring and the curb stop double O-rings. The curb stop shall be fitted with a female iron thread for later attachment to yoke. Only flared fittings will be permitted.

4.4.4.2. VALVES. All valves other than air release valves and tapping valves shall be manufactured by American AVK Company (www.americanavk.com), M & H Valve Company (www.mh-valve.com), American Flow Control (www.acipco.com), Kennedy Valve Company (www.kennedyvalve.com), Mueller Company (www.muellersales.com), or U.S. Pipe and Foundry Company (www.uspipe.com). No other valves will be considered.

Valves shall be for direct burial service. Valves shall be for vertical setting with two inch (2") tee wrench nut, shall open counter-clockwise, and shall have "O" ring-type packing. All valves not requiring a vault shall have two-piece cast iron valve box, Models 562-S or 662-S, as manufactured by Tyler Pipe, or approved equivalent. Valve box shall be equipped with a cast iron lid imprinted “WATER”.

Vendor shall furnish an affidavit to the Owner assuring compliance with all provisions of the standard, including testing.

4.4.4.2.1. GATE VALVES. All gate valves four inch (4″) through fourteen inch (14″) shall be resilient wedge type with either a cast or ductile iron body and a non-rising stem. The wedge shall be either cast or ductile iron encapsulated with rubber, shall be symmetrical, and seal equally well with the flow in either direction. Gate valves shall be in compliance with the latest version of either AWWA C509 or AWWA C515. Bolting materials shall be stainless steel with the bolting strength required by ASTM A307 and may have either square or hexagonal heads with dimensions conforming to ANSI B18.2.1. Operating nut shall have four flats at the stem connection to assure even input torque to the stem.

4.4.4.2.2. BUTTERFLY VALVES. All water mains of 16 inches or larger diameter shall require the use of resilient seat butterfly valves in accordance with ANSI/AWWA C504.

All butterfly valves shall be installed in a precast concrete manhole having a minimum interior diameter of five feet, and in accordance with 4.5.3.4.4. The dimensions of larger valves may require 6-foot I.D. manholes. Manhole casting shall be East Jordan 1020 series with a self-sealing, non-rocking lid imprinted with the word "WATER".

4.4.4.2.3. AIR RELEASE VALVES. Air release valves shall be Val-Matic, model numbers 15, 22, 25 or 38 or approved equal (www.val-matic.com), and shall incorporate the optional vacuum-check feature. All air release valves must be sized by the design engineer according to system capacity and operating pressure, and size must be approved by the Utilities Engineer. Air release valves are to be installed in an air valve vault as detailed in the Standard Drawings.

4.4.4.2.4. TAPPING VALVES. A tapping valve is a special gate valve designed with end connections and an unobstructed waterway to provide proper alignment and positioning when assembling a tapping sleeve, valve, and machine for tapping pipe dry or under pressure. The connecting flange of the tapping valve mating with the tapping machine must be parallel and concentric with the waterway to provide proper alignment for the tapping operation. The size of the valve waterway shall include appropriate

clearance for the diameter of the tapping machine cutter recommended by the valve manufacturer. All tapping valves shall be cast iron body, fully bronze mounted, with a resilient seat and a non-rising stem in accordance with the latest revision of AWWA C509. All tapping valves shall be open left, and shall be furnished with a 2-inch cast iron operating nut. Tapping valves shall have mechanical joint ends, with one end flanged with raised face to match the groove in the tapping machine outlet. All tapping valves shall be manufactured by American AVK Company (www.americanavk.com), Kennedy Valve Company (www.kennedyvalve.com), Mueller Company (www.muellersales.com), or U.S. Pipe (www.uspipe.com).

4.4.4.2.5. TAPPING SLEEVES OR SADDLES. Mechanical joint tapping sleeves shall be used to connect a tapping valve to an existing pressurized main to make a tap where conditions make it impractical to interrupt service to the existing main. The tapping sleeve body consists of two main parts, a back section and a throat section. These are coupled around the existing main by bolts and nuts and sealed to the main by a gasket. The tapping sleeve body shall be fabricated of carbon steel, stainless steel, cast iron, or ductile iron. The body shall be provided with a test plug for pressurization of the sleeve, valve, and tapping machine assembly just before the cut is made. Bolts and nuts shall be either corrosion resistant, high-strength, low alloy steel, in accordance with AWWA C111, or 18-8 stainless steel. Gaskets shall be Buna-N (Nitrile) in accordance with ASTM D2000 BA508, or pre-approved equal. For all instances where the tap is at least one pipe size smaller than the pipe to be tapped, contractor shall use one of the following sleeves: Ford Style FTS, FTSC, or FTSS; Smith-Blair 622; Romac SST; JCM 412-ESS. For size-on-size taps (where the tap is the same size as the pipe to be tapped) where pipe diameter is 12-inches or less, contractor shall use one of the following: Tyler/Union Ductile Iron MJ Tapping Sleeve; Mueller H-615 MJ Tapping Sleeve. Size-on-size taps for pipe diameters larger than 12-inches will be reviewed by the Utilities Engineer on a case-by-case basis.

4.4.4.3. VALVE MARKERS. A valve marker pipe, as detailed in the Standard Drawings, is to be set near each sectionalizing valve and air release valve. No extra payment will be made for valve markers; the price of each valve marker is to be included in that of the valve it locates.

4.4.4.4. FIRE HYDRANTS. Fire hydrants shall conform to the latest revision of ANSI/AWWA C502.

All hydrants shall be American AVK Series 2780 (www.americanavk.com), Kennedy Guardian (www.kennedyvalve.com) or Mueller Centurion (www.muellersales.com). No other hydrants will be considered. Hydrants to be taken over and maintained by CBU shall receive a single, thorough coat of silver metallic paint; hydrants to be taken over and maintained by Indiana University shall receive a single, thorough coat of red paint; hydrants to be privately owned and maintained shall receive a single, thorough coat of yellow paint. The vendor shall furnish a certificate that each hydrant has been tested in accordance with the AWWA Standard.

4.4.4.5. FLUSH HYDRANTS. All flush hydrants, whether installed in grassy areas or in pavement, shall be **Gil model Aquarius 101 GHS, 2-inch Slim Line Hidden Hydrant**, or **Kupferle Model TF500 Flush Hydrant** (www.hydrants.com). All flush hydrants shall be installed in a traffic-rated six-inch valve box with lid. A 2-inch, brass-bodied, double O-ring, full-port valve with a Teflon coated ball shall be installed immediately before either type of flush hydrant. Valve shall be equipped with road type valve box.

4.4.5. **MATERIALS FOR STORM SEWERS.** This section describes materials to be used in design and construction of storm sewers, including pipes, manholes, inlets, catch basins, castings, frames, and covers. Inlets, catch basins, concrete curbs and gutters along all streets, and storm sewers, shall be designed to accommodate peak discharge produced by the ten (10) year design interval storm. All structures shall be protected from the one-hundred (100) year design interval storm, and shall be consistent with the capacity of downstream storm sewer facilities. Storm sewer systems shall be designed using the Rainfall Intensity-Duration-Frequency Curves (IDF Curves) for Bloomington, Indiana. The IDF Curves are developed by CBU utilizing the latest information from the National Weather Service, and are shown on CBU Standard Detail Number 16. Rainfall duration shall be equal to time of concentration. Hydraulic calculations for each run of pipe shall accompany all storm sewer plans

submitted to CBU for review. Hydraulic calculations must be prepared by a licensed professional engineer registered in the State of Indiana and engaged in storm drainage design.

4.4.5.1. PIPE FOR STORM SEWERS.

4.4.5.1.1. DUCTILE IRON PIPE (DIP). Ductile Iron Pipe shall be centrifugally cast and shall conform to ANSI A21.51 and AWWA C-151, latest revision. Ductile Iron Pipe shall be Pressure Class 350, 300, 250, 200 or 150. Old pressure classes 50 through 56 will also be allowed when required due to deep burial or high loading. Pressure class shall be determined by the Utilities Engineer on a case-by-case basis.

4.4.5.1.1.1. COATINGS AND LININGS. DIP shall be standard cement lined with an approved bituminous seal coat in accordance with AWWA C-104, ANSI A21.4. Pipe shall be installed within am 8 mil high-density cross-linked polyethylene encasement material, inclusive of fittings. The material shall be furnished and installed in accordance with AWWA C-105, ANSI A21.5 to provide the pipe with a protective enclosure.

4.4.5.1.1.2. JOINTS. Joints may be either slip joints or mechanical.

4.4.5.1.1.2.1. SLIP JOINTS. The O-ring gaskets sealing the slip joint shall be made of rubber of special composition having a texture to assure a soil-tight, permanent seal, and shall be the product of a manufacturer having at least five (5) years experience in the manufacture of rubber gaskets for pipe joints. The gasket shall be a continuous ring of flexible joint rubber of a composition and texture resistant to common ingredients of sewage, industrial wastes, and surface runoff, and which will be very highly resistant to conditions likely to be imposed by this service. The gasket shall conform to AWWA C-111, ANSI A 21.11.

4.4.5.1.1.2.2. MECHANICAL JOINTS. Mechanical joints are also acceptable and may be required by the Utilities Engineer in certain circumstances. Mechanical joints and accessories shall conform to AWWA C-110. The nuts and bolts shall be corrosion resistant high-strength low alloy steel.

4.4.5.1.1.3. FITTINGS. Fittings shall be standardized for the type of pipe and joint specified, and shall comply with AWWA C-110, ANSI A 21.10, and AWWA C-153, ANSI A 21.53. Fittings shall be cement lined and seal coated in accordance with 4.5.1.1.1.

4.4.5.1.1.4. MARKINGS. The class designations for the various classes of pipes and fittings shall be cast into fittings in raised letters and numerals, and cast or stamped on the outside of each joint of pipe.

4.4.5.1.2. HIGH DENSITY POLYETHYLENE (HDPE) PIPE. HDPE pipe shall be bell and spigot type with smooth interior walls. The pipe and fittings shall be made from virgin PE compounds which conform to the current edition of the AASHTO Material Specifications for cell classification as defined and described in ASTM D3350. All HDPE pipe shall meet requirements of the current issue of AASHTO M252 and M294 (4″- 60″ diameters).

Manufactured wyes, tees, bends or adapters will only be allowed in place of precast storm sewer manholes, inlets, or catch basins when written permission has been given by the Utilities Engineer

4.4.5.1.2.1. JOINTS. Flexible gasket joints shall be compression type so that, when assembled, the gasket on the pipe end shall be compressed radially in the pipe bell to form a soil-tight seal for all soil types and groundwater conditions.

4.4.5.1.2.2. GASKETS. Gaskets for HDPE shall be of an elastomeric o-ring composition having a texture to assure a soil-tight and permanent seal. The gasket shall be a continuous ring of flexible joint rubber of a composition and texture to restrain common ingredients of sewage, industrial waste, and surface runoff, and which will be highly resistant to conditions likely to be imposed by this service. Gaskets shall conform to all requirements of ASTM F477.

4.4.5.1.2.3. NOMINAL PIPE STIFFNESS. Minimum parallel plate stiffness values for HDPE storm sewer pipe, when tested in accordance with ASTM D2412, shall be as follows: 4″ through 12″ = 49 pii, 15″ = 42 pii, 18″ = 40 pii, 24″ = 34 pii, 30″ = 28 pii, 36″ = 22 pii, 42″ = 20 pii, 48″ = 18 pii, 60″ = 14 pii.

4.4.5.1.2.4. MARKINGS. Each length of HDPE storm sewer pipe shall be clearly marked with the manufacturer's name, trademark, nominal pipe size, production or extrusion code, material cell classification, and ASTM or AASHTO number.

4.4.5.1.3. POLYVINYL CHLORIDE (PVC) PIPE. PVC pipe may only be used for storm sewer construction with written permission of the Utilities Engineer. When approved, it shall conform to the following: PVC storm pipe shall be the integral wall bell and spigot type with elastomeric seal joints and smooth inner walls. Pipe shall meet one of the following standards and related cell classifications:

ASTM D 3034	12454B or C, 13364B
ASTM F 789	12164B
ASTM F 679	12364C, 12454C
ASTM F 794	12364A
ASTM F 949	12454B or C
AASHTO M304	12454C, 12364C

All PVC storm sewer pipe shall have a minimum pipe stiffness of 46 psi when measured at 5% vertical ring deflection and tested in accordance with ASTM D 2412.

4.4.5.1.3.1. JOINTS. Flexible gasket joints shall be compression type so that, when assembled, the gasket inside the machined groove on the pipe spigot shall be compressed radially in the pipe bell to form a soiltight seal for all soil types and groundwater conditions. The assembly of joints shall be in accordance with the pipe manufacturer's recommendations and ASTM D 3212.

4.4.5.1.3.2. GASKETS. Gaskets for PVC shall be made of rubber of special composition having a texture to assure a watertight, permanent seal, and shall be the product of a manufacturer having at least five (5) years experience in the manufacture of rubber gaskets for pipe joints. The gasket shall be a continuous ring of flexible joint rubber of a composition and texture resistant to common ingredients of sewage, industrial wastes, and surface runoff, and which will be very highly resistant to conditions likely to be imposed by this service. Gaskets shall conform to all requirements of ASTM F 477.

4.4.5.1.3.3. MARKINGS. The date of manufacture, class of pipe, and specification designation, size of pipe, name or trademark of the manufacturer, and identification of plant shall be legibly marked on each section of pipe per the ASTM requirement.

4.4.5.1.4. REINFORCED CONCRETE PIPE. All reinforced concrete pipe shall be Class III, IV, or V in accordance with the latest edition of ASTM C 76, wall thickness "B" or "C" as per site conditions. Pipe shall be manufactured from Portland Cement and aggregate as specified herein.

4.4.5.1.4.1. PORTLAND CEMENT. Portland Cement for manufacture of concrete pipe and fittings shall be Type I or Type III and shall conform to ASTM C 150. Upon request, the Contractor shall furnish manufacturer's certificate stating the type of cement used in the manufacture of the pipe furnished.

4.4.5.1.4.2. AGGREGATE. Aggregate for manufacture of concrete pipe and fittings shall conform to ASTM C 33 except that the requirement for gradation shall not apply. Upon request, the Contractor shall furnish manufacturer's certificate stating the type of aggregate used in the manufacture of the pipe furnished.

4.4.5.1.4.3. STEEL REINFORCEMENT. Steel reinforcement shall be in accordance with requirements of the applicable table in ASTM C 76. Reinforcement shall extend full into bell and spigot ends for pipes 36 inch and larger, and shall extend full into the bell of rubber gasket pipes 12 inch and larger. Elliptical

reinforcement shall not be permitted. Longitudinal reinforcement shall be continuous, and all reinforcement shall have a minimum concrete cover of 1 inch.

4.4.5.1.4.4. LIFT HOLES. Lift holes shall not be permitted for concrete pipe less than 36 inches in diameter. A maximum of two lift holes may be provided for each section of reinforced concrete pipe 36 inches in diameter and larger. Lift holes shall be formed, tapered, or drilled. Lift holes shall be repaired in a clean, workmanlike manner using a conical shaped precast plug, properly sealed in place using a non-shrink cement grout or an expanding Portland Cement mixture such as OCTOCRETE (IPA Systems, Inc.) (www.ipasystems.com) in accordance with manufacturer's application instructions. Mastic sealant shall not be used for lift hole repair.

4.4.5.1.4.5. JOINTS. Concrete pipe shall be furnished with joints using either concrete bell and spigot or zinc coated steel bell and spigot rings, or rubber seal and rings (Anderson Seal or approved equal). All types of joints shall have a groove on the spigot for a rubber "O" ring gasket. Pipe joints using concrete bell and spigot or zinc coated steel bell and spigot rings shall conform to ASTM C 361 except that the gaskets shall be as specified hereinafter. Pipe joints using rubber gaskets shall conform to ASTM C 443 so that the joint will remain soiltight for all soil types and groundwater conditions. The steel bell shall be welded to the longitudinal reinforcing, and a steel skirt (minimum 5.75 inches in length and fabricated from 16 gauge metal) shall be continuously welded to the inside face of the steel spigot ring and to the longitudinal reinforcement.

Profile gasket type joints using a self-lubricated gasket (Forsheda Style 138 or approved equal) on a single offset spigot and formed bell are acceptable. Joints shall be sealed with a profile rubber gasket conforming to ASTM C 443 so that the joint will remain soiltight under all conditions of service.

Only one style of joint system will be permitted from structure to structure in a single run of pipe.

Mastic sealer shall not be used to seal reinforced concrete pipe joints.

4.4.5.1.4.6. ABSORPTION LIMIT. Absorption by the reinforced concrete pipe shall not exceed 6% of its dry weight.

4.4.5.1.4.7. MARKINGS. The date of manufacture, class of pipe, and specification designation, size of pipe, name or trademark of the manufacturer, and identification of plant shall be legibly marked on each section of pipe per the ASTM requirement.

4.4.5.1.5. SPIRAL RIB (TYPE I.R.) METAL PIPE (SRP). Spiral Rib Pipe may be used on a case-by-case basis with written approval of the Utilities Engineer after review of hydraulic calculations. All Spiral Rib (Type I.R.) metal pipe fabricated under this specification shall be formed from aluminum coated Type 2 sheet conforming to AASHTO M274 (ASTM A 929).

The manufacture of Spiral Rib (Type I.R.) pipe shall be in accordance with the applicable section of AASHTO M36, ASTM A 760. In addition, a 1/8″ diameter rubber cord shall be placed in the lockseam during the manufacturing process.

4.4.5.1.5.1. NOMINAL PIPE WALL THICKNESS. All Spiral Rib pipe provided under this specification shall have wall sectional properties that meet the design requirements of AASHTO Standard Specification for Highway Bridges - Section 12 (ASTM A 796).

4.4.5.1.5.2. JOINTS. External coupling bands will be accepted for use with Spiral Rib pipe. All coupling bands shall be fabricated of the same material type as the pipe and shall be fabricated to overlap an equal amount of each adjoining pipe section. Each pipe end shall be formed to have a minimum of two annular corrugations. Each joint shall utilize closed-cell expanded rubber gaskets. The coupling bands shall be fully corrugated 5-C annular bands with a double-bolted bar-and-strap connector and a nominal 12 inch wide gasket.

4.4.5.1.5.3. GASKETS. The closed-cell expanded rubber gaskets shall be approximately 12 inches wide and approximately 3/8″ thick. The gaskets shall conform to ASTM D 1056, Grade SCE-43-L.

4.4.5.1.5.4. INSTALLATION. Installation of Spiral Rib pipe shall be in conformance with ASTM A 798 - Standard Practice for Installing Factory-made Corrugated Pipe for Sewers.

4.4.5.1.5.5. MARKINGS. The date of manufacture, trademark of the manufacturer, and identification of plant location shall be legibly marked on the outside of each pipe section in accordance with the required Standards.

4.4.5.2. PRECAST AND CAST-IN-PLACE BOX CULVERTS: For both precast and cast-in-place structures, shop drawings showing at a minimum the concrete mix, wall thickness, steel reinforcement details, pipe connections, and structure dimensions, shall be submitted for approval of each structure to be built. The shop drawings must be reviewed and certified by a registered Professional Engineer prior to submittal. Such shop drawings will be reviewed by CBU on a case-by-case basis.

4.4.5.3. OPEN CHANNELS: All open channel design shall conform to the standards set forth in the latest issue of the Monroe County Storm Water Design Ordinance. CBU reserves the right to modify said standards on a case-by-case basis as deemed necessary by the Utilities Engineer. Plans for repair and replacement of existing open channel structures within the CBU jurisdictional area must be reviewed and certified by a registered Professional Engineer prior to submittal. Such plans will then be reviewed by CBU on a case-by-case basis.

4.4.5.4. DETENTION PONDS AND DAMS. Design of detention ponds and dams shall be in accordance with the standards set forth in the latest issue of the Monroe County Storm Water Design Ordinance. CBU reserves the right to modify said standards on a case-by-case basis as deemed necessary by the Utilities Engineer. Plans for detention ponds and dams within the CBU jurisdictional area must be reviewed and certified by a registered Professional Engineer prior to submittal. Such plans will then be reviewed by CBU on a case-by-case basis.

4.4.5.5. STORM SEWER MANHOLES, INLETS, AND CATCH BASINS. Storm sewer manholes, inlets, and catch basins shall be installed at the locations and elevations shown on the plans. Manholes or inlets are required at the following locations: at the end of each line segment; at all changes in alignment, grade, size, and pipe material; and at all pipe intersections. Catch basins may be constructed using manholes or inlets having the outlet pipe installed minimum 30 inches above the structure base so that sediment and debris may be trapped before entering the storm sewer pipe system. Catch basins shall also control solids or floatable matter by use of hoods, traps, and submerged discharges.

4.4.5.5.1. STORM SEWER STRUCTURES. Structures for storm sewers may be cast-in-place or precast.

4.4.5.5.1.1. CAST-IN-PLACE STORM SEWER STRUCTURES. For cast-in-place structures, shop drawings showing at a minimum the concrete mix, wall thickness, steel reinforcement details, pipe connections, and structure dimensions, shall be submitted for approval of each structure to be built. The shop drawings must be reviewed and certified by a registered Professional Engineer prior to submittal.

4.4.5.5.1.2. PRECAST STORM SEWER MANHOLES. See Sanitary Sewer Manholes, Sections 4.4.2.2.2. through 4.4.2.2.4. and Sections 4.5.2.1.7.1. through 4.5.2.1.7.4. Storm manholes will not be restricted to one foot of fall through the structure, nor will outside drops be required. Sealing or waterproofing of storm manholes will not be required.

4.4.5.5.1.3. PRECAST CONCRETE INLETS AND CATCH BASINS. Precast concrete box inlets and catch basins shall be constructed in accordance with Indiana Department of Transportation (INDOT) Standard Specifications. Only inlet Type “A”, Type “A” Modified, Type “C”, Type “E”, and Type “J”, and catch basin Type “A”, Type “J”, and Type “W” may be used.

Alternative precast or monolithic box inlets will be accepted provided all standard specifications of INDOT are met or exceeded.

The structural design of precast concrete box inlets and catch basins shall be in full conformance with the requirements of ASTM C 890.

A maximum depth of four feet from the bottom of the casting to outlet pipe invert will be allowed for Type "A" or Type "A" (modified) box inlet structures.

4.4.5.5.1.4. CONCRETE BASES, INVERTS, AND FLOW CHANNELS. Monolithic or precast bases shall be minimum 6 inches thick for 4 foot diameter and minimum 8 inches thick for larger diameter manholes, and shall be constructed of Class A Concrete having a minimum compressive strength of 4,000 psi.

The wall and base thickness of precast box inlet and catch basin structures shall be as specified by the INDOT Standard Specifications and shall be constructed of Class A Concrete having a minimum compressive strength of 4,000 psi.

Manhole table and trough shall be in accordance with Section 4.5.2.1.7.2.

When Contractor is connecting a new pipe to an existing storm structure, the table and trough of the existing structure shall be rebuilt to conform to the standards of a new structure.

4.4.5.5.1.5. ADJUSTMENT OF FRAMES AND COVERS.

4.4.5.5.1.5.1. PRECAST MANHOLE ADJUSTING RINGS. Final adjustments to the elevation of the frame and cover shall be made only by the use of precast concrete adjusting rings conforming to ASTM C 478. Rings shall be of a nominal thickness of not less than two (2) inches. No more than two adjusting rings will be permitted, and not more than twelve (12) inches total of adjusting rings shall be used to adjust the elevation of a frame and cover.

A soiltight seal shall be provided between the cone or flattop and riser ring, and between adjoining riser rings, by use of waterproof, non-shrink mortar.

4.4.5.5.1.5.2. PRECAST CONCRETE BOX INLETS AND SPACERS. For precast concrete box inlets, the adjustment of casting and grate shall be accomplished using precast concrete spacers of a minimal nominal thickness of six (6) inches. The maximum number of spacers allowed will be four (4). A soiltight seal shall be provided between each component of the precast box inlet and precast concrete spacers by use of non-shrink waterproof mortar or non-asphaltic mastic material.

Adjustment of casting elevation for precast box inlets may be accomplished by using solid concrete brick and mortar to a maximum height of six (6) inches. This type of casting adjustment shall be accomplished in conformance with the following:

1. Solid pre-cast Class A concrete bricks of a nominal thickness of two (2) inches in conformance with ASTM C 139 shall be used.

2. No joint shall exceed 3/8 of an inch in width, and as nearly as practicable, adjoining courses shall break joints at one-half unit intervals.

3. Minimum constructed wall thickness shall be six (6) inches.

4. Mortar for laying bricks shall be composed of one (1) part masonry cement and two (2) parts mortar sand.

5. Both the inside and the outside of the adjustment area shall be plastered to at least ½ of an inch thickness using the mortar mix as in Item 4 above, or a mixture composed of one (1) part of a combination of Portland Cement and hydrated lime and two (2) parts sand. The lime portion of this mix shall not exceed ten percent (10%) of the sand. Plaster coats shall be smooth, clean, and watertight.

4.4.5.5.1.6. CASTINGS, FRAMES, AND COVERS. The plans shall show the use and placement of each casting type. Type of casting shall consider the required square footage of open area needed to convey the estimated stormwater flow. "Bicycle safe" and "pedestrian safe" grates shall be used where deemed necessary by the Utilities Engineer.

Manhole frames and covers shall be East Jordan Iron Works castings, catalogue number 1020 or 1022 or approved equivalent. Catalogue numbers 1037 or 1050 or approved equivalents may be used with the permission of the Utilities Engineer. Lids shall be Gasket Seal Cover catalogue number 1020A, heavy duty, or approved equivalent. The words "STORM SEWER" shall be cast in each manhole cover.

All castings, frames, grates, and lids shall be coated. All inlet and catch basin frames shall be imprinted with the words: "DUMP NO WASTE – DRAINS TO RIVER". No type of casting, frame, grate, or cover other than East Jordan shall be used unless written approval is granted by the Utilities Engineer.

All castings shall conform to the requirements of ASTM and following:

1. Castings shall be of uniform quality, free from blow holes, porosity, hard spots, shrinkage, distortion, or other defects. Castings shall be smooth and well-cleaned by shot blasting or other approved method.

2. All castings shall be manufactured true to pattern; component parts shall fit together in a satisfactory manner. Round frames and covers shall be of non-rocking design or shall have machined horizontal bearing services to prevent rocking and rattling under traffic. All castings used for the same application shall be fully interchangeable.

3. All weights shall not deviate from the tolerances permitted by ASTM Standards (i.e., ASTM A 48-83 "Standard Specifications for Gray Iron Castings").

4. All castings shall be manufactured in accordance with ASTM A 48-83 Class 35B, and shall have a minimum tensile strength of 35,000 psi.

4.4.5.5.1.7. MANHOLE AND INLET DIMENSIONS. The following are minimum manhole diameters for storm sewers entering or exiting a manhole at the following range of angles:

	MANHOLE DIAMETERS	
PIPE SIZE	Pipes Entering/ Leaving at 0-45 Degree Bend	Pipes entering/ Leaving at 45-90 Degree Bend
12"-21"	48"	48"
24"	48"	60"
27"-30"	60"	60"
33"-36"	60"	72"

Manholes for pipe sizes greater than 36 inches shall be reviewed by the Utilities Engineer on a case-by-case basis.

The following are maximum pipe inside diameters for precast inlets and catch basins:

MAXIMUM INSIDE DIAMETERS FOR INLETS AND CATCH BASINS

Structure Type	**Straight Connection** (See Note 1 below)		**Skew / Corner Connection** (See Note 2 below)	
A	15″		12”	
A Modified	18″		15″	
	Long Wall	**Short Wall**	**Long Wall**	**Short Wall**
B	36″	24″	24″	15″
C	36″	24″	24″	15″
E	24″	24″	15″	15″
J	27″	18″	18″	15″

Note 1: Straight-out connections should not be made to either precast inlet wall touched by a skew / corner connection unless sufficient box inlet wall area remains on each side of the connecting pipe to assure structural integrity of the precast unit.

Note 2: A maximum of two (2) skew / corner connections will be permitted for each precast inlet.

The number and entrance angle of pipe connections, with consideration given to outside pipe diameter(s), shall be as stated above to ensure maintenance of structural integrity of the manhole or inlet structure. If the structural integrity of the manhole or inlet cannot be maintained, a cast-in-place structure will be required. Shop drawings for cast-in-place structures showing at a minimum the concrete mix, steel reinforcement details, pipe connections, and structure dimensions, shall be submitted for approval of each structure to be built. The shop drawings must be reviewed and certified by a registered Professional Engineer prior to submittal.

With written permission of the Utilities Engineer, a standard manhole structure, fit with a standard inlet casting, may be used in place of a cast-in-place structure to overcome skew problems with

interconnecting pipes. Such use of standard manhole structures will be reviewed on a case-by-case basis.

4.4.5.6. STEPS. Manhole steps shall be provided in all storm sewer structures 48 inches in diameter and larger as required to allow access for inspection, cleaning, and repairs. Steps shall only be required above the maximum flow line in each sewer, and essentially only in the risers and cone sections above large box structures.

Manhole steps shall be polypropylene, polypropylene coated steel reinforcing, or an approved non-corrosive fiberglass material. The copolymer polypropylene shall meet the requirements of ASTM D 4101, reinforced with deformed 3/8 of an inch minimum diameter reinforcing steel conforming to ASTM A 615, Grade 60. Cast iron steps are not acceptable.

4.4.5.7. SEWER PIPE TO STORM STRUCTURE CONNECTIONS. Inlet and outlet pipes shall extend through the inlet or outlet walls a sufficient distance to allow placement of grouting material around the pipe diameter both inside and outside the structure wall, preventing leakage around the pipe's outer surface. Inlet and outlet pipes shall not extend through the structure wall to the point that flow is obstructed.

Holes for connection of storm sewer pipes shall be pre-formed by the manufacturer, or by core-drilling the structure. At no time shall the pipe hole exceed pipe outer diameter plus six (6) inches (O.D. + 6″), to ensure proper connection is achieved. Structures with pre-formed thin-wall "knock-outs" will not be permitted.

For Reinforced Concrete Pipe, the annular space between the pipe and the precast structure wall shall be filled inside and out with a waterproof, non-shrink mortar such as OCTOCRETE (IPA Systems, Inc.) (www.ipasystems.com), or approved equal, in accordance with the manufacturer's instructions.

PVC pipe, HDPE pipe, DIP, and SRP pipe shall connect to a structure by use of a flexible boot KOR-N-SEAL 1 or 2 flexible connector (www.npc.com), cast-in-place Dura-Seal gasket (www.duratech.com), "A"-Lok or "Z"-Lok gasket (www.a-lok.com), or Fernco Waterstop gasket (www.4-fernco.com), or approved equals.

4.4.5.8. REJECTION OF PRECAST STORM STRUCTURE SECTIONS. Precast reinforced concrete manholes, risers, inlets, catch basins, and tops shall be subject to rejection for failure to conform to any of the following specification requirements:

1. Fractures or cracks passing through the shell, except for a single crack that does not exceed the depth of the joint.
2. Defects that indicate imperfect proportioning, mixing, and molding.
3. Surface defects indicating honeycombed or open texture.
4. Damaged ends, where such damage would prevent making a satisfactory joint.
5. The internal diameter of the manhole section shall not vary more than one percent (1%) from the nominal diameter.
6. Structure having visible reinforcing steel along the inside or outside surface, except for reinforcement stirrups or spacers used to position the cage or form during manufacture.

4.5. INSTALLATION OF SANITARY, WATER, AND STORM MAINS.

4.5.1. **GENERAL.** This section covers excavation work and pipe installation which include the following: clearing, grubbing, and preparation of the site; removal and disposal of all debris; excavation and trenching; handling, storage, transportation, and disposal of all excavated material; sheeting, shoring, and protection; preparation of subgrades; pumping and dewatering; protection of adjacent property; pipe embedment; laying of pipe; excavation for structures; bedding; backfilling; construction of fills and embankments; surface restoration and regrading; other appurtenant work.

Before commencement of any on-site activity, the Contractor shall verify that a copy of the State Construction Permit is on file in the Office of the Utilities Engineer.

The Contractor shall indicate to the Utilities Inspector, during his initial visit to the site, the nature and storage place of any and all hazardous substances. This shall be updated as necessary.

The Contractor is responsible for ensuring that safe working conditions exist and safety procedures are being followed at the Work site, and shall maintain a trench safety system in compliance with OSHA Part 1926 of the Code of Federal Regulations. The Utilities Department's inspector is NOT responsible for policing the Contractor's safety program. If, in the course of routine inspection, an unsafe condition is noted, the inspector will notify the Contractor of this condition and report it to the Engineer. If the condition continues to exist, the inspector shall again notify the Engineer, document the unsafe condition in writing and through a photograph, and leave the job site. The Engineer will contact IOSHA and request that they dispatch an inspector immediately.

Bedding, backfilling, construction fills, and embankments shall not be done during freezing weather except by permission of the Engineer. No backfill, fill, or embankment materials shall be installed on frozen surfaces, nor shall frozen materials, snow, or ice be placed in any backfill, fill, or embankment.

4.5.1.1. PROTECTION OF THE SITE. Before any excavation is started, adequate protection shall be provided for all lawns, trees, shrubs, landscape work, fences, hydrants, wells, sidewalks and curbs, and other objects that are to remain in place. Such protection shall be maintained as long as necessary to prevent damage from the Contractor's operations. Any damage that may occur shall be repaired to original condition or replaced by the Contractor at no expense to the Owner.

4.5.1.2. TRENCH EXCAVATION. Where pipe grades or elevations are not definitely fixed by the contract drawings, trenches shall be excavated to a depth sufficient to provide a minimum depth of backfill cover over the top of the pipe of 48" except as otherwise ordered or approved by the Utilities Engineer.

When unstable soil conditions are encountered and the trench bottom is not firm, all soft and compressible material shall be excavated and replaced with #1 or #2 crushed stone before placement of the bedding material. As an alternative, with written permission of the Utilities Engineer, an acceptable geo-fabric may be used beneath the bedding material to stabilize the trench bottom.

Trenches shall be excavated to a width which will provide adequate working space for proper pipe installation, jointing, and embedment. However, the minimum trench width between the installed pipe and either trench wall shall be seven inches (7"). The stipulated minimum clearances are not minimum average clearances, but the minimum clear distances which will be permitted between any part of the pipe as laid, and any part, projection, or point of rock, stone, or boulder.

Where necessary to reduce the earth load on trench banks to prevent sliding and caving, the banks may be cut back on slopes which shall not extend lower than one foot (1') above the top of the pipe.

4.5.1.2.1. CLASSIFICATION OF EXCAVATED MATERIALS. Excavated materials shall be classified as earth excavation or rock excavation and shall include whatever materials are encountered, to the depths required, as directed by the Engineer.

4.5.1.2.1.1. EARTH EXCAVATION. Earth excavation shall include earth, all rocks or boulders less than one-half (1/2) cubic yard in volume, all rock which may be removed by scarification by excavator or backhoe, asphalt, and all concrete or masonry structures which, in the opinion of the Engineer, do not require drilling or blasting, or use of hoe-ram for removal.

4.5.1.2.1.2. ROCK EXCAVATION. Rock excavation shall include ledge rock, all boulders exceeding one-half (1/2) cubic yard in volume, and concrete or masonry structures or any other material which, in the opinion of the Engineer, requires drilling and blasting or use of hoe-ram for removal.

4.5.1.2.1.2.1. ROCK EXCAVATION FOR PLACING PIPE. Where rock is encountered in the trench, the Contractor shall open the trench to full depth for sufficient distance to lay one length of pipe. The rock shall be excavated a minimum of six inches (6") below the outside surface of the pipe bell, and at least seven inches (7") from the outside of the pipe bell on each side. For rock depths greater than four feet, rock quantities shall be calculated as in 4.5.1.2.1.2.4. Each section of pipe shall be backfilled immediately after laying. The exposed end of the last pipe shall be covered with sandbags to protect it from damage by flying debris.

4.5.1.2.1.2.2. ROCK EXCAVATION FOR STRUCTURES. For cast-in-place structures, rock excavation shall be no larger than is necessary to facilitate construction and removal of formwork. When precast structures are used, a minimum six inch (6") clearance will be maintained between the structure and any rock. For rock depths greater than four feet, rock quantities shall be calculated as in 4.5.1.2.1.2.4.

4.5.1.2.1.2.3. BLASTING. Blasting will **not be permitted in any circumstances** without written permission of the Utilities Engineer

4.5.1.2.1.2.3.1. GENERAL. The Contractor shall comply with all local, state, and federal laws, ordinances, applicable safety code requirements, and regulations relative to the handling, storage, and use of explosives and the protection of life and property. Suitable methods shall be employed to minimize fly rock. Blasting practices, at the minimum, shall follow the applicable requirements and recommendations of the National Fire Protection Association "NFPA 495-Code for the Manufacture, Transportation, Storage, and Use of Explosives and Blasting Agents", unless local and state requirements are more stringent. The Contractor shall be responsible for obtaining all blasting permits required by all regulating agencies.

Contractor shall erect signboards of adequate size stating that blasting operations are taking place in the area, and such signs shall be clearly visible at all points of access to the area. Contractor shall coordinate the configuration of these signboards with local regulations. Contractor shall utilize a reliable audible warning system to ensure that any personnel in the area are forewarned of the impending detonation of explosives.

Contractor shall be solely responsible for the safety and stability of the excavation slopes for the entire duration of the work. Excavation work and discretionary support methods shall be the responsibility of Contractor. Blasting technique and pattern shall be best suited to the nature of the rock and the particular excavation.

Discretionary support shall be provided by Contractor to maintain safety and stability of the excavation slopes. Discretionary support is likely to be needed depending on several factors, including commonly occurring variability in the subsurface conditions; structure of rock, such as orientation of joints, location of bedding planes, and lithology; and results of blasting. Support may include sheeting and shoring, rock bolts or dowels, concrete, shotcrete, mesh, strapping, and other similar items commonly used in the work of this nature.

The Contractor shall be responsible for all damage caused by his blasting operations.

4.5.1.2.1.2.3.2. BLASTING CONSULTANT. The Contractor shall employ personnel experienced in blasting techniques, and shall retain the services of an independent blasting consultant who shall determine optimum blasting patterns and shall advise Contractor's blasting supervisor. Blasting shall be done under the direct supervision of the blasting consultant. The Contractor shall provide written documentation that the blasting consultant and the person conducting the blast has at least 10 years of

experience in design and implementation of rock excavation using controlled blasting methods for similar construction.

The blasting consultant shall maintain a professional liability insurance in the amount of $1,000,000. The evidence of such insurance and the blasting consultant's qualification shall be submitted to the Utilities Engineer at least 14 days in advance of commencing blasting operations.

All drilling and blasting shall be done in a manner which will minimize the disturbance to material outside the required excavation limits. Care shall be taken to ensure against blasts which might damage previously completed portions of the excavation.

4.5.1.2.1.2.3.3. PERMITS AND APPLICABLE STANDARDS**.** All required federal, state, and local permits for blasting and explosives shall be obtained and paid for by the Contractor. Copies of such permits shall be furnished to the Utilities Engineer before any blasting operations may be started.

All blasters and blasting foremen shall be properly licensed in accordance with the applicable laws and regulations of federal, state, and local agencies.

4.5.1.2.1.2.3.4. BLASTING PLAN. At least 14 days before commencing blasting operations, Contractor shall reproduce for record purposes and shall forward to the Utilities Engineer for review, a detailed two part conceptual blasting plan which has been prepared by the independent blasting consultant and reviewed and approved by the Contractor or his safety engineer. After approval by the Utilities Engineer, this blasting plan shall be posted onsite. The plan shall include qualifications of monitoring personnel. Storage and use of explosives at the project site will not be allowed until the blasting plan is approved by the Utilities Engineer.

Part 1 of the conceptual plan shall include a complete summary of proposed transportation, handling, storage, and use of explosives. Part 2 of the conceptual plan shall include the proposed general concept for the blasting and for the control of noise, dust, fly rock, airblast, and vibrations. Test blast planned by Contractor shall be included in Part 2.

In addition to the conceptual plan, individual shot plans shall be reproduced, for record purposes, on a day-to-day basis, and submitted to the Utilities Engineer. Submittal shall be timely so that the plans are received by the Utilities Engineer at least 24 hours before the scheduled time for blasting provided for in the plan. The individual shot plans shall be prepared by the blasting consultant and shall bear his signature. Individual shot plans shall include, but shall not be limited to, the following information:

Drilling patterns

Number, location, inclination, diameter, and depth of drilled holes

Amount, type, and distribution of explosives per hole

Powder factor; time delays; weight of explosives in each delay

Sequence of firing

Time of blast

Total pounds of explosive

Any other pertinent data indicating Contractor’s intent and purpose to produce smooth and sound surfaces of excavation and to project adjacent facilities.

The blast plan shall be revised if the results of blasting do not conform to the overall project objectives and technical requirements of these specifications.

After acceptable standard drilling and blasting procedures have been developed, the individual plan need contain only as a minimum the location, date, time of round detonation, foreman's name, and reference with the drawing number of previously submitted individual plan. All loading deviations from the previous individual plan shall be noted to provide an accurate record of blasting operations. If conditions change, requiring modifications to the plan, a revised individual plan shall be submitted to the Utilities Engineer for review. After receiving his approval, the modified plan shall be posted onsite.

Contractor shall assume complete responsibility for protecting the existing facilities and the Work under construction. The Utilities Engineer's receipt of the Contractor's blasting plans and procedures shall not relieve the Contractor of his responsibility to perform the Work in accordance with the Contract Documents and to protect life, property, and the Work under construction. All damage resulting from the blasting operations shall be repaired at the Contractor's expense.

4.5.1.2.1.2.3.5. BLASTING PROCEDURES. Selection of blasting procedures is the responsibility of the Contractor and the blasting consultant. All blasting shall be performed in accordance with the best modern practice, using methods and techniques that will preserve the unexcavated rock face and excavation bottom in the best and most stable condition and which will reduce overbreak to a minimum. Shattering or splitting of unexcavated rock or the opening up of any seams in rock not excavated, and the disturbance of rock outside the excavation lines, shall be avoided. All rock damaged by blasting shall be removed. The Utilities Engineer, at his discretion, may require replacement of said damaged and removed rock with crushed stone or concrete.

4.5.1.2.1.2.3.6. BLAST MONITORING**.** At the Utilities Engineer's discretion, certain projects may require blast monitoring as part of the Contractor's blasting plan. If blast monitoring is required, Contractor shall perform the following procedures.

Contractor shall measure baseline ground vibrations at the facilities nearest to the blast areas prior to the start of blasting procedures. Seismographs shall be used to monitor ground vibrations, frequency content of vibration, and peak particle velocity components in three mutually perpendicular directions. A minimum of three seismographs shall be provided. Seismographs shall be calibrated within 90 days of using on the project. Calibration of each seismograph shall be submitted to the Utilities Engineer for review of certification of calibration and the date of calibration before any blasting is performed. Seismographs shall be the type that provide a hard copy printout.

Monitoring shall be performed at three structures nearest the location of the individual blasts (or as directed by the Utilities Engineer).

For vibration frequencies equal to or less than 40 Hz (cycles per second), the peak particle velocity, defined as the maximum of the three velocity components of vibration, at any location shall be less than 1 inch per second. For vibration frequencies greater than 40 Hz the peak particle velocity at any location shall not exceed 2 inches per second and the displacement shall be less than 0.004 inches. In addition, Contractor shall measure air overpressure at the location of the monitors. Air overpressure in each case shall not exceed 0.02 psi. The blasting consultant shall examine these limits of peak particle velocity, displacement, and air overpressure in view of the blast design and condition, proximity of the structures and pipeline, and shall determine further restrictions as necessary to eliminate the risk of damage to these facilities.

Contractor shall monitor vibration frequencies, peak particle velocities, displacements, and air overpressures for any facility for any blast which may create vibrations, displacements, and air overpressure levels more than 25 percent of these limits, as determined by measurements on trial blasts and early production blasting near each affected facility.

Blasting parameters recorded by seismographs shall be analyzed after each shot. Limiting parameters of these specifications or more restrictive limits set by the blasting consultant shall not be exceeded. If monitoring indicates that the limits have been exceeded, critical areas of the site shall be examined for

damage and assessments for repairs shall be immediately undertaken. There shall be no further blasting until charges are adjusted to limit the vibration levels allowed by these specifications and/or to prevent damage to facilities.

Copies of measurement records shall be submitted to the Utilities Engineer within 4 hours after each blast.

Any damage to existing structures resulting from the Contractor's operations shall be repaired to the satisfaction of the Utilities Engineer at the Contractor's expense.

4.5.1.2.1.2.3.7. PREBLAST SURVEY. Contractor shall perform a preblast survey of all facilities within five hundred feet of the area to be blasted to determine and document the structural condition of each facility. Video and photographic documentation of all facilities shall be included with the preblast survey report. The video and photographs shall be of sufficient detail to discern any existing cracks or defects. Contractor shall submit the preblast survey report to the Utilities Engineer.

4.5.1.2.1.2.3.8. POSTBLAST SURVEY. Contractor shall perform a postblast survey of the same facilities surveyed in the preblast survey to determine the effect of blasting operations. Contractor shall submit postblast survey report to the Engineer within 30 days of completing the blasting operations.

4.5.1.2.1.2.4. ROCK EXCAVATION PAY LIMITS. Rock quantities will be calculated from measurements taken in the field by the Engineer or his representative, in consultation with the Contractor or his representative. *Only rock that has been so measured will be paid for as rock excavation under this item*. Rock will be paid to the following limits: six inches (6") below all pipes and structures; seven inches (7") horizontal distance outside all pipes, and six inches (6") horizontal distance outside all structures. ***For rock depths of four feet or less, the trench width for payment purposes shall be outside diameter of the pipe plus 14 inches.*** For rock depths greater than four feet, the pay limit shall be ***outside diameter of the pipe plus 14 inches*** up to one foot above the top of the pipe, then increasing one foot in width on each side of the trench for every three feet of increased depth. All calculation of rock pay quantities for claims shall be done in this exact manner. Any rock removed at the direction of the Engineer or his representative will also be measured for payment. No payment will be made for rock that can be removed by scarification using the bucket of a backhoe or excavator.

Contractor will be paid for rock quantities calculated from the field measurements described above at the rate listed on a schedule included in the bid form.

4.5.1.2.2. STOCKPILING OF EXCAVATED MATERIALS. Excavated materials suitable and required for backfilling shall be stored in a neat pile adjacent to the excavation in a manner which causes a minimum of interference with traffic and ensures a maximum of safety for workers in the trench. Excavated materials shall not be placed with sufficient height or proximity to excavation so as to endanger workers due to earth slides or upheavals.

4.5.1.2.3. DISPOSAL OF EXCESS EXCAVATED MATERIALS. All suitable excess excavated material shall be disposed of in a manner and at such locations as approved by the Engineer, and at the Contractor's expense. All unsuitable excavated material, together with all debris, junk, stone, logs, stumps, and roots, shall be removed from the site and disposed of by, and at the expense of, the Contractor.

4.5.1.2.4. UNAUTHORIZED EXCAVATION. Excavation below grade shall be filled with either #11 or #12 crushed stone bedding as directed by the Engineer at no additional cost to the Owner.

4.5.1.2.5. SHEETING AND SHORING. IOSHA regulations 29 C.F.R. 1926, Subpart P, for trench safety systems, shall be considered incorporated into this section. Excavation shall be adequately sheeted and braced to prevent damage to the line, to adjacent structures, utilities, pavements or walks, and to prevent

injury to workmen or others. No extra payment to the Contractor shall be made by reason of the Engineer's order to strengthen support for the protection of the Work or workers.

4.5.1.2.6. REMOVAL OF WATER. The Contractor shall provide and maintain adequate dewatering equipment to remove and dispose of surface and ground water entering the excavation.

Excavation shall be maintained in a condition that will permit installation of the pipe without flotation or damage. Surface water shall be diverted or otherwise prevented, to the greatest extent practicable, from causing damage to adjacent property.

If the bottom of the excavation is unsuitable for pipe installation, it shall be further excavated and prepared as the Engineer may direct. Such authorized work shall be paid for as extra work.

4.5.1.2.7. TRENCH MAINTENANCE. The Contractor shall be responsible for all settlement of backfill which may occur within a period of one year after the date of final inspection and acceptance. The Contractor shall make, or cause to be made, all necessary backfill and repairs or replacements appurtenant thereto, within 30 days after notice by the Engineer or Owner.

4.5.1.3. BORING OR TUNNELING. As required in the drawings, or by State Highway Permits, concrete or steel pipe casing shall be bored and jacked under the highway with allowance made for grade and/or cover. A suitable lubricant, such as bentonite, may be applied to the outside surface of the jacked pipe to reduce friction.

If an obstruction that stops progress of the pipe is encountered during installation, the cause of stoppage shall be determined and the installation method modified to best suit the conditions encountered, except that line and grade may not be changed. If the Contractor proposes abandonment of in-place piping and initiation of another attempt at an alternate location, the stymied pipe shall be left in place and filled with grout. Any alternate location must be approved by the Engineer.

After casing is installed, Contractor shall push successive lengths of pipe through to make connection to the open-trenched main. Pipe shall be positioned within casing by use of Cascade stainless steel casing spacers, manufactured by Cascade Waterworks Mfg. Company (www.cascademfg.com), APS stainless steel casing spacers, APS carbon steel casing spacers with fusion-bonded epoxy coating, or, for PVC pipe only, APS polyethylene casing spacers, all as manufactured by Advance Products and Systems, Inc. (www.avprod.com). All casing spacers shall be installed in compliance with manufacturer's instructions. After pipe has been tested for leakage, both ends of casing shall be sealed with solid concrete brick and non-shrink mortar. A suitable rubber gasket, such as Fernco Waterstop (www.4-fernco.com), shall be installed around all PVC pipe at point where casing is sealed.

The unit price per lineal foot of casing required as herein described shall include all such extra work and materials required in tunneling. Payment for the carrier pipe will be made in addition to the unit price for the footage of the casing. ***Any rock encountered and removed in the actual act of boring, i.e., the calculated volume of the casing pipe, will be paid for at the unit price for conventional rock excavation.***

4.5.1.4. BEDDING. The Contractor shall provide the bedding material as noted below and as indicated on the plans. The cost for bedding material shall be included in the bid price for the main, and is not a separate pay item. Bedding shall be either #11 or #12 crushed stone.

4.5.1.4.1. BENEATH PIPE. All pipe shall be bedded on four inches (4") of either #11 or #12 crushed stone when in soil, and on six inches (6") when the pipe is laid in rock. The stone shall be spread and the surface graded to provide a uniform and continuous support beneath the pipe at all points between pipe joints. It will be permissible to slightly disturb the finished bedding surface by withdrawal of pipe slings or other lifting tackle. After each pipe has been placed, sufficient pipe embedment material shall be

deposited and shovel-sliced beneath the haunches of the pipe up to the spring line to hold the pipe in proper position during subsequent operations. This shall be done uniformly and simultaneously on each side of the pipe to prevent lateral displacement of the pipe.

4.5.1.4.2. BENEATH STRUCTURES. Bedding shall be a minimum of 4" of either #11 or #12 crushed stone in soil and 6" in rock. All over-excavation shall be filled with either #11 or #12 crushed stone or Class D Concrete, as ordered by the Engineer, to achieve elevations indicated on the plans.

4.5.1.5. LAYING OF PIPE. Anchors shall be required for stabilization of any pipe having a slope of 20% or greater.

Every precaution shall be taken to prevent foreign material from entering the pipe during installation. If this proves ineffective, the Engineer may require that, before lowering the pipe into the trench, a heavy, tightly-woven canvas bag of suitable size be placed over each pipe end and left there until connection is to be made to the adjacent pipe.

Each length of pipe shall be inspected while suspended above the trench immediately before installation, with special attention being given to pipe ends and gaskets. Defective pipe or fittings shall be laid aside for inspection by the Engineer, who will prescribe corrective repairs or rejection.

4.5.1.6. BACKFILL. Backfill materials shall be placed and compacted in uniform lifts and shall have a moisture content to assure that maximum density will be obtained with compaction. All trench backfill above pipe embedment shall conform to the following requirements:

4.5.1.6.1. BENEATH PAVEMENTS, SURFACING, AND DRIVEWAYS. Backfill shall be full-depth #53 stone compacted in six-inch (6") lifts.

4.5.1.6.2. UNDER HIGHWAY SHOULDERS; UNDER FILLS OR EMBANKMENTS. Backfill shall be compacted in six-inch lifts to full depth of trench. Full-depth #53 stone backfill is required if nearest trench edge is within five feet of pavement.

4.5.1.6.3. IN UNIMPROVED AREAS. Backfill may be the same materials as excavated, but may contain no stone larger than six inches (6") in its greatest dimension.

4.5.1.6.4. AROUND STRUCTURES. Backfill shall be placed and compacted in uniform lifts not to exceed twelve inches (12") in depth.

4.5.1.7. SEPARATION BETWEEN UTILITIES.

4.5.1.7.1. VERTICAL SEPARATION BETWEEN UTILITIES. A minimum of 18 inches vertical separation shall be maintained between all utilities unless otherwise indicated on the Plans or in the Special Conditions, or unless written permission is given by the Engineer.

Sewers crossing water mains shall be laid to maintain a minimum vertical distance of 18 inches between the outside of the water main and the outside of the sewer main. This shall be the case whether the water main is above or below the sewer. The crossing shall be arranged so that the joints in the sewer main will be equidistant and as far as possible from the joints in the water main. The crossing must be at a minimum angle of forty-five degrees (45°) measured from the centerlines of the sanitary sewer and water main. Where a water main crosses under a sewer, adequate structural support shall be provided for the sewer to maintain line and grade.

4.5.1.7.2. HORIZONTAL SEPARATION BETWEEN UTILITIES. A minimum of 10 feet horizontal separation shall be maintained between all utilities unless otherwise indicated on the Plans or in the Special Conditions, or unless written permission is given by the Engineer.

4.5.1.7.3. IF IMPOSSIBLE TO MAINTAIN PROPER VERTICAL OR HORIZONTAL SEPARATION. When it is impossible to maintain proper vertical or horizontal separation as stipulated above, the following construction methods shall apply:

A. The sewer shall be designed and constructed equal to water pipe with minimum 200 psi pressure rating. Actual leakage testing shall be that of normal sanitary sewer pipe.

B. Sanitary sewer and water mains shall not be in direct contact.

C. In crossing, all joints in the sanitary sewer main shall be of compression type and placed equidistantly and as far as possible from the water main.

D. In parallelism, the sanitary sewer and water mains shall be laid on separate trench shelves.

4.5.1.8. SEPARATION BETWEEN CBU MAINS AND TREES OR PERMANENT STRUCTURES. Sanitary, water, or storm mains or appurtenances to be taken over and maintained by CBU shall not be constructed within ten (10) feet of any tree or permanent structure, nor shall any tree or permanent structure be placed within ten (10) feet of any existing or proposed CBU main or appurtenance without written permission of the Utilities Engineer. A minimum of eight (8) feet of separation shall be maintained between sanitary manholes and water mains, measured from outside of manhole to outside of pipe. Permanent structures shall include, but not be limited to, buildings, sheds, retaining walls, planters, business signs, power poles, anchor wires, light standards, flag poles, other utility lines or appurtenances, or any object of a more or less permanent nature which would hinder or preclude excavation to repair CBU infrastructure.

4.5.2. **INSTALLATION OF SANITARY MAINS.** This section describes the specific methods and general practices to be used in installation of sanitary sewer mains.

4.5.2.1. INSTALLATION OF GRAVITY SEWERS. All gravity sewer pipe shall be installed at the grade indicated on the plans by using an automatic pipe laser and appropriate target matched to the diameter of the pipe being installed. Gravity sewers, when flowing full, shall be designed and constructed with slopes that shall result in average flow velocities of not less than two (2) feet per second in accordance with the following table:

Pipe Diameter (inches)	Minimum Slope (percent)
8	0.40
10	0.28
12	0.22
14	0.17
15	0.15
16	0.14
18	0.12
21	0.10
24	0.08
27	0.067
30	0.058
33	0.052
36	0.046
39	0.041
42	0.037

Pipes may not be oversized solely in order to justify using decreased slopes; volume of flow must justify pipe diameter. Both slope and direction shall remain uniform between manholes. All gravity sewer

installation shall begin at the farthest downstream point and proceed upstream with the bell ends facing upstream. Anchors shall be required for stabilization on all pipe having a slope greater than 20%: slopes from 20% to 34% require anchors spaced no more than thirty-six (36) feet on center; from 35% to 49% require anchors spaced no more than twenty-four (24) feet on center; greater than 50% require anchors spaced no more than sixteen (16) feet on center.

During laying operations, no debris, tools, clothing, or other materials shall be placed in the pipe. As each length of pipe is placed in the trench, both the spigot end of the pipe being laid and the gasket of the last pipe laid shall receive a coating of approved pipe lubricant. The spigot end shall be centered in the bell and the pipe forced home and brought to appropriate alignment and grade. The pipe shall be secured in place with appropriate backfill material tamped over it. Precautions shall be taken to prevent any material from entering the pipe.

Contractor shall be responsible for taking adequate measures to prevent inflow of surface run-off or groundwater into the City's sanitary sewer system during construction.

New Sanitary Sewer: At the start of installation of new sanitary sewer, Contractor shall place a plug in the spigot end of the first new pipe to be placed. This shall be a pneumatic plug with a sealing length greater than the diameter of the pipe. The plug shall be checked periodically and shall remain in place at all times until the sewer is complete and ready for testing.

Sanitary Sewer Replacement: During sanitary sewer replacement projects, Contractor shall make a water-tight, temporary connection between the existing pipe and the new pipe at the end of each work day or whenever inclement weather forces a temporary stop in the work.

If the Contractor fails to take adequate measures to prevent such inflow, the result could be surcharging and backup of sewage into homes and businesses downflow from the project area. If the resulting damages are attributable to negligence on the part of the Contractor, the Contractor shall be held liable for those damages.

4.5.2.1.1. INSTALLATION OF PLASTIC PIPE. This subsection specifies installation methods for pipes made of polyvinyl chloride and polyethylene plastic. ASTM D2321 or AWWA C605 and manufacturer's recommended installation procedures shall be followed. All plastic pipe shall be handled with a canvas or nylon sling.

4.5.2.1.1.1. FIELD-CUTTING PLASTIC PIPE.

4.5.2.1.1.1.1. POLYVINYL CHLORIDE (PVC) PIPE. PVC pipe shall be field-cut with an acceptable saw so as to leave a smooth end at right angles to the axis of the pipe. For SDR-35 PVC pipe the cut end shall be beveled with a hand or power tool for insertion into gasketed joint.

4.5.2.1.1.1.1.1. PVC PROFILE PIPE. Each type of PVC profile pipe shall be field-cut in accordance with the manufacturer's recommendations. Gasket replacement (on spigot end) varies with type of pipe. Some types also require special manufactured fittings for entering and exiting manholes.

4.5.2.1.1.1.2. POLYETHYLENE (PE) PIPE. Spirolite PE pipe is made up in two different configurations: profile pipe and corewall pipe. Profile (spiral-ribbed) pipe cannot be field-cut. Adjustments in length are made with corewall (smooth-wall) pipe, which is used only for connecting to manholes. Corewall pipe is to be cut and beveled in the same manner as PVC pipe.

A push-plate will be required in seating P.E. pipe. The push-plate must fit neatly inside the bell and provide a sturdy, flat surface to prevent damage to the bell when pushing with the excavator bucket to seat the pipe. Pipe may also be seated by use of a come-along, and a come-along must always be used when seating curved manufactured fittings.

4.5.2.1.1.2. BEDDING AND BACKFILL FOR PLASTIC PIPE. Since all flexible pipe receives a high degree of its bearing strength from the surrounding material, type of bedding and backfill material and their compaction are very important.

4.5.2.1.1.2.1. PVC PIPE. For SDR-35, F679, C900, and C905 PVC pipe, bedding to be as stated in 4.5.1.4.1. For profile pipe of all types and diameters, bedding shall be six inches of #11 or #12 crushed stone. Primary backfill for all PVC pipe shall be #11 or #12 crushed stone to a point 12 inches above top of pipe. Backfill above this point (secondary backfill) shall be as stated in 4.5.1.6. and following.

4.5.2.1.1.2.2. PE PIPE. Bedding shall be either #11 or #12 crushed stone, 1/8th of pipe diameter (4" minimum) on suitable soils, 1/8th of pipe diameter (6" minimum) over rock. Additional foundation for bedding may be needed if the trench bottom is unstable. Primary backfill shall extend to at least 12 inches above the pipe crown and shall be evenly placed on both sides of the pipe in lifts not exceeding 12 inches. Primary backfill shall be shovel-sliced beneath haunches of pipe and shall be mechanically compacted with a vibratory compactor to at least 90% Standard Proctor Density. Secondary backfill shall be as stated in 4.5.1.6. and following.

4.5.2.1.2. INSTALLATION OF VITRIFIED CLAY PIPE (VCP). All VCP shall be installed (with written permission of Utilities Engineer) in accordance with ASTM C-12.

4.5.2.1.2.1. BEDDING AND BACKFILL FOR VITRIFIED CLAY PIPE. Bedding to be as stated in 4.5.1.4.1. Backfill to be as stated in 4.5.1.6. and following.

4.5.2.1.3. INSTALLATION OF DUCTILE IRON PIPE (DIP). All installation of DIP shall conform to the latest revision of AWWA C600. DIP shall always be handled with canvas or nylon straps (no chains) to avoid damage to external coating. Any such damage must be repaired by Contractor at no additional cost to Owner.

4.5.2.1.3.1. FIELD-CUTTING DIP. DIP which has been field-cut must beveled for insertion into gasketed joints.

4.5.2.1.3.2. BEDDING AND BACKFILL FOR DIP. Bedding to be as stated in 4.5.1.4.1. Backfill to be as stated in 4.5.1.6. and following.

4.5.2.1.4. INSTALLATION OF REINFORCED CONCRETE PIPE (R.C.P.).

4.5.2.1.4.1. BEDDING AND BACKFILL FOR REINFORCED CONCRETE PIPE. Bedding shall be as stated in 4.5.1.4.1. Backfill shall be as stated in 4.5.1.6. through 4.5.1.6.3.

4.5.2.1.5. SERVICE CONNECTIONS. Wyes with six inch (6") laterals and being of the same size and material as the main, shall be installed for each property, developed or undeveloped, or as indicated on the Plans. House service wyes shall be located no more than 10 feet from the downstream side of the vacant lots unless topography obviously indicates otherwise. In the case of occupied lots, it shall be the Contractor's responsibility to determine the location preferred by the property owner.

The use of tee or wye saddles will be permitted only if those of the factory-made, in-line type cannot be used, as determined by the Engineer. Such tee or wye saddles must be fitted with a rubber gasket which seals against the main, and must use stainless steel straps for mounting. Fitting and joint material shall be the same as used for the main.

All wyes, unless otherwise specified, shall be inclined upward at an angle not less than 25 degrees nor greater than 45 degrees from the horizontal. Each wye shall be securely sealed by a cap or plug of the same material as the pipe in such a manner that the cap may be removed without injuring the bell or

gasket at such time as the house service sewer is installed. Contractor shall place a two-by-four or four-by-four extending vertically from the branch of the wye in the trench to a point at least two feet above finished grade to facilitate future location.

4.5.2.1.5.1. SANITARY LATERALS AND CLEAN-OUTS. If the sewer main is laid along one side of the road right-of-way, the service connections for those properties located on the opposite side of the road shall be run to the opposite edge of the pavement, maintaining minimum four feet of cover over the 6-inch lateral, and acceptably plugged or capped. Contractor shall place a two-by-four or four-by-four extending vertically from the end of the service line in the trench to a point at least two feet above finished grade to facilitate future location. This marker shall be painted green to indicate "sewer". In special instances the Utilities Engineer may give written permission for the Contractor to place two laterals in a common trench. In such instances, minimum two feet horizontal separation must be maintained between the two pipes at all points. The Contractor shall include in his bid the costs of all labor, materials, and equipment to install all service connections required. These costs shall include the cost of pipe, bedding, backfill, and road restoration.

When a Contractor is installing a sanitary service lateral between a residence or place of business and a lateral stub-out or a City main, the installation shall be in accordance with Uniform Plumbing Code, Section 409(a). This section states that whenever the elevation of the lowest floor to be served is lower than the casting elevation of the upstream manhole on the main where connection is to be made, a check valve will be required on the sanitary lateral. All horizontal in-line check valves 6″ or smaller shall be PVC and shall be as manufactured by CANPLAS Industries Ltd (www.canplas.com) or Plastic Oddities (www.plasticoddities.com), Inc., or pre-approved equivalent. Since check valves may be blocked open by solid particles, Utilities Engineering recommends that the check valve be installed in the basement or in a pit to facilitate periodic clearing of the valve, or removal and replacement if necessary.

All sanitary laterals shall have a clean-out at least every 90 feet. All clean-outs, whether in grassy areas or in pavement, shall be sub-surface and protected by a suitable metal casting such as East Jordan Catalogue No. 2975 or Neenah Catalogue No. R-1974-A. In grassy areas, the casting shall be provided with a circular concrete collar flush with the top of the casting and the ground surface. The collar shall be minimum 6 inches thick and shall extend at least 8 inches beyond the outside of the casting on all sides. In pavement, the top of casting shall be flush with the surrounding pavement. Top of clean-out shall be no more than 3 inches below the top of the casting.

4.5.2.1.5.2. AREA DRAINS FOR DUMPSTER PADS. All area drains for dumpster pads must connect to the sanitary sewer. To prevent inflow of surface run-off, the drain intake must be equipped with a traffic-rated floor drain with a solid, ductile iron cover, hinged, with locking device to assure positive closure. Casting shall also have a free-standing sediment bucket with lift bar. Casting shall be Traffic Floor Drains Figure Number 2410, as manufactured by Jay R. Smith Mfg. Co. (www.jrsmith.com) or pre-approved equivalent, installed in accordance with manufacturer's instructions.

4.5.2.1.6. SEWER PIPE TO MANHOLE CONNECTIONS. To connect a sanitary sewer to a manhole, either a flexible boot KOR-N-SEAL 1 or 2 flexible connector (www.npc.com), cast-in-place Dura-Seal gasket (www.duratech.com), "A"-Lok or "Z" Lok gasket (www.a-lok.com), or approved equal shall be used. Connections to an existing manhole shall be by core-drilling the opening and insertion of KOR-N-SEAL or approved equal (www.npc.com).

If the flexible boot connection is used, it shall be placed in the reinforced concrete manhole base and secured to the pipe by a stainless steel clamp.

All connections shall provide for a watertight seal between the pipe and manhole. The connector shall be the sole element relied upon to assure a watertight seal of the pipe to the manhole.

4.5.2.1.7. INSTALLATION OF MANHOLES. The Contractor shall construct all manholes at the locations and of the materials indicated on the drawings and as specified. Manholes shall be designed and constructed to have no more than one foot of fall from invert in to invert out. Greater than one foot of fall will require construction of an outside drop. During sewer design, the Design Engineer shall determine if there will be adequate vertical space to construct the outside drop of the proper diameter pipe in accordance with CBU Standard Detail #2. If he determines that there is not adequate vertical space, the Design Engineer shall adjust the slope of the incoming pipe to leave maximum one foot of fall through the manhole so that an outside drop is not required.

The Design Engineer shall also be aware that, for manholes having more than one inlet pipe, there shall be no more than 0.3 foot difference between invert elevations of the inlet pipes. This will preserve flow characteristics through the manhole and facilitate construction of table and troughs.

4.5.2.1.7.1. ASSEMBLY OF MANHOLE BASE, BARREL, AND CONE. Base and first riser section shall be one complete precast unit. Joints between the barrels, between the barrels and the base unit, and between the barrels and cone or flattop shall be sealed by using an approved rubber gasket in accordance with ASTM C443, latest revision, and Octocrete on both the inside and outside of the joint, in accordance with 4.4.2.2.6. and 4.5.2.1.7.5.

4.5.2.1.7.2. INSTALLATION OF TABLE AND TROUGH. The invert of all pipe openings shall be at least three inches above the base to provide for installation of table and trough. For manholes on a completely new reach of sanitary sewer, the table and trough may be cast as a part of the base unit, or constructed of masonry brick and non-shrink mortar with written permission of the Utilities Engineer. For replacement manholes to which one or more existing pipes must be connected, openings in the base unit shall be core-drilled on site after removing the old structure and shooting elevations of existing pipe(s) to assure accuracy; table and trough shall be installed on site and constructed of masonry brick and non-shrink mortar. In both cases the invert channels shall be smooth with a semi-circular bottom and vertical sides extending upward to the height of the pipe crown. In the latter case, both table and invert channel shall receive two coats of Drycon (IPA Systems, Inc.) (www.ipasystems.com). Changes of flow direction within manholes shall be made by a smooth curve having as large a radius as possible. The manhole table shall be smooth and slope towards the channel not less than one inch (1") per foot.

4.5.2.1.7.3. INSTALLATION OF MANHOLE STEPS. Manhole steps shall *not* be situated directly above the inlet or outlet pipes, but to one side of the manhole, granting access to the table. Steps shall be installed with non-shrink mortar or epoxy grout.

4.5.2.1.7.4. INSTALLATION OF CASTINGS. Castings shall be set in a nominal 1" bed (approximately 0.75"× 1.05") of sealant made of butyl rubber material in flexible rope form. Sealant shall meet all requirements of ASTM C-990 and AASHTO M-198. Sealant shall be PRO-STIK, as manufactured by Press-Seal Gasket Corporation (www.press-seal.com), or pre-approved equivalent. In paved areas, top of casting shall match finished grade; in unpaved/grassy areas, castings shall be installed so that the top extends a minimum of three inches above finished grade, and surface shall be graded to provide positive surface drainage away from manhole.

No brick or block shall be used to adjust the elevation of the frame and cover without permission of the Utilities Engineer. Cones and flattops shall be set so that no more than 12" of reinforced concrete rings will be required to adjust the top of the manhole casting to grade.

4.5.2.1.7.5. MANHOLE SEALANTS. There are two acceptable methods of assuring water-tight manhole construction. Method #1 is strongly preferred; Method #2 may be used only with written permission of the Utilities Engineer. Regardless of which waterproofing method is used, Contractor shall plug all lift holes and seal all section joints both internally and externally with a non-shrink grout or an expanding Portland Cement mixture such as OCTOCRETE (IPA Systems, Inc.) (www.ipasystems.com) in accordance with manufacturer's application instructions.

Method #1: The manhole manufacturer shall give written conformation that all reinforced precast concrete manhole sections contain the inorganic copolymer waterproofing admixture IPANEX, manufactured by IPA Systems, Inc. (www.ipasystems.com), in compliance with manufacturer's dosage and mixing instructions.

Method #2: (Only with written permission of the Utilities Engineer) Before assembly, the entire outer surface of the manhole, including the underside of the manhole base, shall receive a minimum of two coats of FARBERTITE (IPA Systems, Inc.) (www.ipasystems.com) in accordance with manufacturer's application instructions. After assembly (sealing all joints between manhole sections and plugging all lift holes as indicated above), Contractor shall apply a minimum of two coats of DRYCON (IPA Systems, Inc.) (www.ipasystems.com) to the entire manhole interior in accordance with manufacturer's mixing and application instructions.

4.5.2.1.7.6. COLD WEATHER INSTALLATION OF MANHOLES: Whenever the atmospheric temperature is 35° F or below, or whenever the atmospheric temperature may fall below 35° F within the curing period, certain phases of manhole installation shall require the written permission of the Utilities Engineer. These critical phases are: sealing of joints between manhole sections, construction of table and trough, waterproofing of manholes (both inside and out), and installation of castings. Contractor must have the approval of the Utilities Engineer for proposed procedures to maintain temperature of grout, mortar, or sealant at a minimum temperature of 50° F while maintaining adequate moisture in the air throughout the curing period. Cold weather installation shall be performed at the risk of the Contractor and shall be removed and replaced at his expense if grout, mortar, or sealant becomes frozen or otherwise damaged due to low temperature.

4.5.2.1.8. SEWER CLEANING. If televising indicates an inordinate amount of silt, stone, or other debris in the new sewer lines, Contractor shall jet-clean those lines with a high-pressure water jetting unit. The Contractor, at no additional expense to the Owner, shall provide all necessary labor and equipment to jet-clean sewers and to remove and dispose of the collected debris. The Contractor shall also be responsible for providing sufficient water and an appropriate disposal site for debris.

4.5.2.1.9. ABANDONING OF SEWERS. Gravity sanitary sewers which are to be abandoned shall be filled with a thin concrete mix and bulkheaded with a six-inch (6") thick masonry brick and non-shrink, waterproof mortar wall. Manholes to be abandoned shall have the top section removed and shall be filled with #53 stone, compacted in lifts of not more than one foot.

4.5.2.2. DESIGN AND INSTALLATION OF FORCE MAINS. Sanitary force mains shall be designed to avoid the need for air/vacuum release valves. Whenever possible, force mains shall be designed without high points and with the top of the force main below the hydraulic grade line at the minimum pumping rate so that air/vacuum valves will not be needed. If high points in the force main cannot be avoided, an air/vacuum valve or combination valve shall be installed at each significant high point where air could become trapped. A high point shall be considered significant if it is two feet or more above the minimum hydraulic grade line, or, when pumping is intermittent, above the static head line.

Force mains shall incorporate joint restraint to resist thrusts that develop at fittings such as valves, tees, bends, plugs, etc. in the force main pipe. A restrained joint is a special mechanical joint or device that is designed to mechanically couple a calculated number of adjacent joints of pipe together. The entire restrained unit of pipe is then able to transfer thrust forces to the surrounding backfill by friction. Use of joint restraints will be required for all sanitary force main projects within the CBU sewer jurisdictional area. The engineer who designs a force main shall be responsible for incorporating a comprehensive thrust restraint design into his plans. It will not be sufficient to simply include a thrust restraint design table in the detail sheet. Anchorage design at force main fittings shall be based on pipeline pressures at least 25 percent greater than the maximum pump design shut-off head plus a water hammer allowance with an appropriate factor of safety. The design engineer shall make clear to the contractor in the plan and profile

drawings exactly which joints shall be restrained, and which mechanical joint restraints are suitable for each application. The thrust restraint design will be reviewed as a part of standard plan review by CBU Engineering, but the design engineer shall be ultimately responsible for the accuracy and effectiveness of his thrust restraint design for each project. The following mechanical restraints are acceptable for use as listed:

For Restraining Mechanical Joint Fittings:
EBAA Series 1100 for DIP
EBAA Series 2000PV for C900 PVC, and SDR 21 PR200 PVC
Uni-Flange Series 1300-C for C900 PVC
Uni-Flange Series 1300-S for SDR-21 PR200 PVC
Uni-Flange Series 1400 for DIP

For Restraining Push-on C900 PVC Fittings:
EBAA Series 2500
Uni-Flange Series 1360-C

For Restraining Push-on C900 PVC Pipe Joints:
EBAA Series 1600 (4″ through 12″)
EBAA Series 2800 (14″ through 30″)
Uni-Flange Series 1350-C
Uni-Flange Series 1390-C

For Restraining Push-on SDR-21 PR200 PVC Pipe Joints:
EBAA Series 6600 (3″ through 12″)
Uni-Flange Series 1350-S
Uni-Flange Series 1390-S

For Restraining Push-on DIP Joints:
EBAA Series 1100 HD
EBAA Series 1700
Uni-Flange Series 1450

For Restraining Mechanical DIP Joints:
EBAA Megalug
EBAA Series 1100
Uni-Flange Series 1400

4.5.2.2.1. DUCTILE IRON PIPE. See 4.5.3.2.1. and following.

4.5.2.2.2. PVC PIPE. See 4.5.3.2.2. and following.

PVC pipe for construction of force mains shall be SDR-21 (PR200), ETI ULTRA BLUE, or C900 (DR-14).

A #10 insulated solid copper wire shall be wrapped around the pipe so that one revolution is made at least every pipe joint. Splices are to be made with an approved connector, and are to be suitably protected against corrosion.

Where the main is laid off the road, the wire is to be brought to the surface approximately every 500 feet to an air/vacuum valve vault, a sign post, and a valve box. Where the main is laid in the street, the wire is to be brought into a valve box approximately every 500 feet. Sign post shall be furnished by the Utilities Department; valve boxes to be furnished by Contractor.

4.5.2.2.3. HIGH DENSITY POLYETHYLENE (HDPE) PIPE. For pipe material see 4.4.3.2.3. For bedding see 4.5.4.3.1. For primary backfill see 4.5.4.4.1.1. For secondary backfill see Sections 4.5.1.6.1. through 4.5.1.6.3.

4.5.2.2.3.1. JOINING OF HDPE. Sections of HDPE pipe shall be joined by the butt fusion process into a continuous length of pipe at the job site. The joining process shall be the heat fusion method and shall be performed in strict accordance with the pipe manufacturer's recommendations, including pipe temperature, alignment, and fusion pressure. The heat fusion equipment used in the joining procedures shall be capable of meeting all conditions recommended by the pipe manufacturer. Extrusion welding or hot gas welding of HDPE shall not be used. Mechanical joint adapters or flanges may be used to mechanically connect HDPE pipe to transition points. This joining method shall also be performed in strict accordance with the pipe manufacturer's recommendations.

4.5.2.2.3.2. LOCATOR WIRE AND SIGNS. A #10 insulated solid copper wire shall be wrapped around the pipe so that one revolution is made at least every 10 feet. Splices are to be made with an approved connector, and are to be suitably protected against corrosion.

Where the force main is laid off the road, the wire is to be brought to the surface approximately every 500 feet to an air/vacuum valve vault, a sign post, and a valve box. Where the force main is laid in the street, the wire is to be brought into a valve box approximately every 500 feet. Sign post shall be furnished by the Utilities Department; valve boxes to be furnished by Contractor.

4.5.2.2.4. FORCE MAIN FITTINGS. All force main fittings shall be as recommended by the pipe manufacturer and shall be installed in accordance with manufacturers' recommendations.

4.5.2.2.4.1. AIR RELEASE VALVES. Air release valves, air/vacuum valves or, combination valves shall be designed for sewer use and shall be installed in a vertical position at significant high points on a force main (see 4.5.2.2.). A saddle with a two-inch (2") tapping corporation shall be installed on the top of the force main at the high point formed by sloping two adjacent joints to a summit. Installations on PVC pipe will require a brace or support to prevent undesired torque on pipe. Air valves are to be installed in an adequately drained and vented air/vacuum valve vault as shown in Standard Detail #3.

4.5.2.2.5. INSTALLATION OF PUMP STATIONS. Specifications for pump stations are available in a separate packet in the office of the Utilities Engineer, 1969 South Henderson Street.

4.5.2.2.6. INSTALLATION OF WET WELLS. Wet wells may be pre-cast or poured-in-place structures. Sewer pipes shall connect to the wet well by use of either a flexible boot KOR-N-SEAL 1 OR 2 flexible connector (www.npc.com), cast-in-place Dura-Seal gasket (www.duratech.com), "A"-Lok or "Z" Lok gasket www.a-lok.com), or a pre-approved equal. No more than one pipe may connect to a wet well. All other pipes shall connect to a common manhole adjacent to the wet well to facilitate future elimination of the lift station.

4.5.2.2.6.1. PRE-CAST WET WELL STRUCTURES. All pre-cast wet well structures shall be round, and shall be identical to a sanitary sewer manhole. At the discretion of the Utilities Engineer, deep wet wells may require a base wider than the wet well to provide stability. Joints between sections shall be sealed by using an approved rubber gasket in accordance with ASTM C-443, latest edition. In addition, all joints shall be sealed, both internally and externally, with a non-shrink grout or an expanding Portland Cement mixture such as Octocrete (IPA Systems, Inc.) (www.ipasystems.com) in accordance with the manufacturer's application instructions.

4.5.2.2.6.2. POURED-IN-PLACE WET WELL STRUCTURES. Thickness of base and walls, as well as reinforcement, shall depend on size of the structure and will be reviewed on a case-by-case basis. All joints between separate pours shall be keyed and doweled, and shall be sealed with VOLCLAY

WATERSTOP RX, as manufactured by CETCO (www.cetco.com), 1350 W. Shure Drive, Arlington Heights, IL 60004, or pre-approved equal.

4.5.2.2.6.3. WET WELL SEALANTS. There are two acceptable methods of assuring water-tight wet well construction. Method #1 is strongly preferred for pre-cast wet wells, and is always required for poured-in-place wet wells; Method #2 may be used only for pre-cast wet wells and requires written permission of the Utilities Engineer. Regardless of which waterproofing method is used, Contractor shall plug all voids and lift holes and seal all section joints both internally and externally with a non-shrink grout or an expanding Portland Cement mixture such as OCTOCRETE (IPA Systems, Inc.) (www.ipasystems.com) in accordance with manufacturer's application instructions.

Method #1: The wet well manufacturer shall give written conformation that each reinforced precast concrete wet well section, or the concrete used to form the poured-in-place wet well, contains the inorganic copolymer waterproofing admixture IPANEX, manufactured by IPA Systems, Inc. (www.ipasystems.com), in compliance with manufacturer's dosage and mixing instructions.

Method #2: (Only for pre-cast wet wells ; requires written permission of the Utilities Engineer) Before assembly, the entire outer surface of the wet well, including the underside of the wet well base, shall receive a minimum of two coats of FARBERTITE (IPA Systems, Inc.) (www.ipasystems.com) in accordance with manufacturer's application instructions. After assembly (sealing all joints between wet well sections and plugging all lift holes as indicated above), Contractor shall apply a minimum of two coats of DRYCON (IPA Systems, Inc.) (www.ipasystems.com) to the entire wet well interior in accordance with manufacturer's mixing and application instructions.

4.5.2.3. DESIGN AND INSTALLATION OF INVERTED SIPHONS: An inverted siphon refers to a "depressed sewer" which would stand full, even with no flow. The purpose of an inverted siphon is to carry sewage flow under an obstruction such as a stream or waterway and regain as much elevation as possible after the obstruction has been passed. Inverted siphons shall have at least two barrels, which shall be minimum 6-inch DIP. All pipe and fittings shall be provided with a calcium aluminate lining, minimum thickness 0.125 inch for 6-inch through 12-inch pipe and 0.1875 inches for 14-inch through 24-inch pipe. The two pipes shall be positioned parallel, with one pipe, often of smaller diameter, designated as the primary barrel. A lateral overflow weir shall be constructed in the inlet structure to direct the maximum dry-weather flow into the primary barrel. The primary barrel shall be designed with appropriate pipe size, slope, and head to achieve scouring velocities of at least 3.0 feet per second for design average flows. During significant rain events, increased flows will overflow the weir, and be carried by the secondary barrel, which shall be designed to handle the maximum anticipated wet-weather flow. Both the inlet and discharge structures, as well as all pipe and fittings, shall accommodate the nozzle and hose of a jet-rodder to facilitate periodic cleaning. Siphons having large diameter barrels may require an "air jumper" pipe. Such a pipe is approximately one-half the diameter of the primary barrel, and is designed to transport the air set in motion by the moving sewage from the inlet structure to the discharge structure. When both barrels are full, the air cannot be carried through the siphon and will inevitably find an exit from the inlet structure and cause odor problems. In ideal circumstances, the air jumper pipe can be suspended above the hydraulic grade line of the sewer, but in most cases it must run parallel to the siphon, requiring that some provision be made for dewatering the condensate. Under most conditions the Utilities Engineer will require that the entire pipe assembly, or at least some portion thereof, shall be encased in Class B Concrete, minimum cover one foot on all sides. All designs for inverted siphons shall be reviewed on a case-by-case basis by the Utilities Engineer.

4.5.2.4. **CURED IN PLACE PIPE (CIPP).**

4.5.2.4.1. INTENT. It is the intent of this section to describe acceptable materials and installation methods for Cured In Place Pipe (CIPP) rehabilitation of sanitary sewers located within the City of Bloomington Utilities (CBU) Sanitary Sewer Jurisdictional Area. These specifications are based on

materials and processes developed by Insituform of North America, Inc. and FirstLiner USA, Inc. to install a flexible felt tube, impregnated with a thermosetting resin, into an existing sanitary sewer. Circulating hot water is used to cure the resin into a hard, impermeable, cured-in-place pipe, extending from manhole to manhole in a continuous, tight fitting, watertight pipe-within-a-pipe.

4.5.2.4.1.1. SCOPE OF THE WORK**.** Scope of the work shall be as defined in the Contract, Bid Form and Special Conditions for each individual project.

4.5.2.4.1.2. REFERENCE SPECIFICATIONS AND MANUFACTURER'S STANDARDS. This specification references standard specifications of the American Society for Testing and Materials (ASTM), Insituform of North America, Inc. (INA), and FirstLiner USA, Inc. or CBU approved equal. The latest edition and revision of the manufacturer's standards are made a part of this document by such reference.

4.5.2.4.2. GENERAL REQUIREMENTS.

4.5.2.4.2.1. CORROSION REQUIREMENTS. The CIPP shall meet the chemical resistance requirements of ASTM F1216, Appendix X2.

4.5.2.4.2.2. HYDRAULIC CAPACITY. On request, Contractor shall supply calculations to verify that the CIPP shall have at least 100% of the full-flow capacity of the original pipe before rehabilitation. Calculated capacities may be derived using a commonly accepted roughness coefficient for the original pipe material. A typical roughness coefficient for the CIPP shall be as verified by third-party test data.

4.5.2.4.2.3. CIRCUMFERENTIAL SIZING. The felt-fiber tube shall be fabricated to a size that, when installed, will neatly fit the internal circumference of the existing sanitary sewer pipe as specified by CBU. Allowance for circumferential stretching during insertion shall be made in accordance with manufacturer's standards.

4.5.2.4.2.4. LENGTH. The length of the tube shall be as deemed necessary by Contractor to effectively carry out the insertion from inlet to outlet points. Contractor shall verify the lengths in the field. Individual installation runs can be made over one or more access points as determined in the field by Contractor and approved by CBU.

4.5.2.4.2.5. PHYSICAL PROPERTIES OF MATERIALS. The felt-fiber tubing, including the polyurethane or polyvinyl chloride cover, shall meet the requirements of ASTM F1216, section 5.1. The thermosetting resin system shall meet the requirements of ASTM F1216, section 5.2. The cured pipe shall conform to the minimum structural standards as listed below:

Cured Pipe	**Standard**	**Results**
Tensile Stress	ASTM D-638	3,000 psi
Flexural Stress	ASTM D-790	4,000 psi
Modulus of Elasticity	ASTM D-790	200,000-300,000 psi

If so directed, Contractor shall furnish, prior to use of the materials, satisfactory written certification of his compliance with the manufacturer's standards for all materials and conformance with methods of the manufacturer's process.

4.5.2.4.2.6. DEVIATIONS. The deterioration of a sanitary sewer is an ongoing process. Should pre-lining inspections reveal the pipes to be in substantially different conditions from those stated in the design considerations, the Contractor shall request a change in thickness, supporting such request with design data in accordance with manufacturer's standard design policies. The deviation, if approved, shall be reflected by the appropriate addition or reduction in the unit cost for that size as shown in the optional portion of the proposal.

4.5.2.4.3. PRE-INSTALLATION PROCEDURES. The following pre-installation procedures shall be utilized unless otherwise approved by the Utilities Engineer.

4.5.2.4.3.1. SAFETY. Contractor shall carry out his operations in strict accordance with all IOSHA and manufacturer's safety requirements. Particular attention is drawn to those safety requirements involving working with scaffolding and entering confined spaces.

4.5.2.4.3.2. CLEANING OF SANITARY SEWERS. Prior to reconstruction of any pipe, it will be the responsibility of City of Bloomington Utilities (CBU) to remove internal deposits from the pipe. If condition of pipe is unsatisfactory, Contractor shall inform CBU, and a decision will be made at that time whether CBU or Contractor shall be responsible for correcting the condition. If it is decided that Contractor shall clean the pipe, additional payment will be made by change order at the rate established on the bid form for Intensive Cleaning.

4.5.2.4.3.3. INSPECTION OF SANITARY SEWERS. Inspection will be performed by experienced CBU personnel trained in locating breaks, obstacles, and service connections by closed circuit television. The interior of the sewer pipe will be carefully inspected to determine the location and extent of any structural failures. The location of any conditions that may prevent proper installation of CIPP into the pipelines will be noted so that these conditions can be corrected. CBU will provide a video tape and suitable log in the office of the Utilities Engineer, 501 N. Morton Street, Bloomington, Indiana, so that the Contractor may review and comment on the target sewer lines before he makes his own television inspection and records.

4.5.2.4.3.4. LINE OBSTRUCTIONS. It will be the responsibility of CBU to clear the pipe of obstructions such as roots, solids, dropped joints or broken pipe that would prevent the insertion of cured-in-place pipe. If inspection reveals an obstruction that cannot be removed by conventional cleaning equipment, then CBU personnel will make a point repair excavation, uncover and remove or repair the obstruction.

4.5.2.4.3.5. BYPASSING FLOW. Contractor, when required, shall provide for the transfer of flow around the section or sections of pipe designated for CIPP. The bypass shall be made by diversion of the flow at an existing upstream manhole or other access point and directing the flow around the section to be taken from service. Bypass lines and pumps, if necessary, shall be of adequate capacity and size to handle the flow. When available, flow volumes of the target sewer will be provided to Contractor by CBU. The proposed bypassing system must be approved in advance by CBU.

4.5.2.4.4. INSTALLATION OF CURED-IN-PLACE PIPE: CIPP installation shall be in accordance with ASTM F1216, section 7.

4.5.2.4.4.1. PREPARATION. Contractor shall allow CBU to inspect the materials and "wet-out" procedure. Contractor shall designate a location where the uncured resin in the original containers and the unimpregnated felt-fiber tube will be vacuum impregnated prior to installation. A roller system shall be used to uniformly distribute the resin throughout the tube. The quantities of liquid thermosetting materials shall be in accordance with manufacturer's standards to provide the lining thickness specified. Quantities shall be sufficient to fill the volume of air voids in the tube, with additional allowances for polymerization shrinkage and the loss of resin through cracks and irregularities in the original pipe wall.

4.5.2.4.4.2. INSERTION. The wet-out, felt-fiber tube shall be inserted through an existing manhole or other approved access. The manufacturer's standards shall be closely followed during the elevated curing temperatures so as not to overstress the felt-fiber and cause damage or failure prior to cure.

4.5.2.4.4.3. CURING. After installation of wet-out felt tube is completed, Contractor shall supply a suitable heat source and water recirculation equipment. The equipment shall be capable of delivering hot water to the far end of the pipe section through a hose, which has been perforated in accordance with manufacturer's recommendations, to uniformly raise the water temperature in the pipe section above the temperature required to affect a cure of the resin. This temperature shall be determined by the resin/catalyst system employed.

4.5.2.4.4.4. TEMPERATURE MONITORING. The heat source shall be fitted with suitable monitors to gauge the temperature of the incoming and outgoing water circulated by the heat exchanger. Another such gauge shall be placed between the impregnated tube and the invert at the far access point to determine the temperature and time of exotherm. Water temperature in the pipe during the cure period shall not be less than 150° F or more than 200° F, as measured at the heat exchanger return line.

4.5.2.4.4.5. COMPLETION OF INITIAL CURE. Initial cure shall be deemed to be completed when inspection of the exposed portions of CIPP indicate that it is hard and sound and the thermocouples indicate than an exotherm has occurred. The cure period shall be of a duration recommended by the resin manufacturer, as modified for the CIPP process being used, during which time the recirculation of the water and cycling of the heat exchanger continue in order to maintain the required temperature.

4.5.2.4.4.6. COOL DOWN. Contractor shall cool the finished CIPP to a temperature below 100° F before relieving the static head in the inversion standpipe. Cool-down may be accomplished by the introduction of cool water into the standpipe, replacing warmer water being drained from the downstream end. Care shall be taken in the release of the static head that a vacuum is not developed that could damage the newly installed CIPP.

4.5.2.4.5. FINISH. The finished CIPP shall be continuous over the entire length of the insertion run and shall be as free as commercially practicable from significant defects, such as foreign inclusions, dry spots, pinholes and delamination. Any defects that will affect the integrity or strength of the CIPP, whether during the warranty period or in the future beyond the warranty period, shall be repaired at the Contractor's expense, in a manner mutually agreeable to both CBU and Contractor.

4.5.2.4.5.1. SEALING THE ENDS. If, due to broken or misaligned pipe at the access points, CIPP fails to make a tight seal, Contractor shall apply a seal at that point. The seal shall be of a resin mixture compatible with the CIPP.

4.5.2.4.5.2. REINSTATEMENT OF SERVICE CONNECTIONS. If Contractor's television inspection indicates that service connection repairs are necessary, all such work will be performed by CBU personnel in advance of CIPP installation. After CIPP has been installed, Contractor shall reinstate all active service connections as designated by CBU. This shall generally be done from the interior of the newly installed CIPP by means of a television camera and a cutting device that reestablishes service connections to minimum 90 percent of previous capacity. If this method should prove impossible, CBU personnel will assist in point-digging and installing an Inserta-Tee to reconnect the service lateral in question. Personnel shall ***never*** physically enter a pipe to reestablish service connections.

4.5.2.4.5.3. TESTING. CIPP samples shall be prepared and tested in accordance with ASTM F1216, section 8.1. The water-tightness of CIPP shall be gauged while curing and under positive head. CIPP products in which the pipe wall is cured while not in direct contact with the pressurizing fluid must be tested by an alternate method acceptable to CBU.

4.5.2.4.5.4. INSPECTION. Visual inspection shall be in accordance with ASTM F1216, section 8.4. Contractor shall televise each run of sewer before start of work. After the work is completed, Contractor shall televise and record the new CIPP, including the restored connections, on the same tape in order to compare and contrast conditions before and after installation. Said tape shall be submitted to the Utilities Engineer for his review and approval and shall thereafter become the property of CBU.

4.5.2.4.5.5. CLEAN-UP. Upon completion of installation and testing, Contractor shall reinstate the project area affected by his operation to the satisfaction of property owners and CBU.

4.5.2.4.6. MISCELLANEOUS ITEMS.

4.5.2.4.6.1. WATER. All water used for prosecution of the Work as defined in the Contract Documents will be supplied by CBU at no charge to Contractor.

4.5.2.4.6.2. COORDINATION AND COOPERATION WITH CUSTOMERS. At least 48 hours prior to installation of the CIPP, Contractor shall notify each affected resident of the exact start-time that his lateral will be out of service. After installation of the CIPP, Contractor shall promptly reinstate all service laterals as designated by CBU, using the techniques specified herein. Immediately after reinstatement of laterals, Contractor shall notify each resident that his lateral is back in service. Any and all damages arising from failure to promptly reinstate a service lateral as designated by CBU shall be the sole responsibility of the Contractor.

Contractor shall provide at least 48 hours notice to any and all homeowners whose properties he must cross to access easement areas, or whose properties abut easement areas where work is designated to be performed. Contractor shall be responsible for securing the appropriate Right-of-Entry from said homeowners.

It shall be the responsibility of the Contractor to give CBU adequate advance notice of any private property (fences, sheds, clothes lines, shrubbery, etc.) located within easements which might interfere with prosecution of the work by the Contractor. CBU personnel will be responsible for timely removal and replacement of any such obstruction.

4.5.2.4.6.3. PATENTS. Contractor shall warrant and indemnify CBU, the Utilities Service Board, and the City of Bloomington against all claims for patent infringement and any loss thereof.

4.5.2.4.6.4. PAYMENT. Payment for the work as described in the Bid Form, Contract, and Special Conditions, shall be in accordance with the General Conditions, Section GC-49, of the CBU Specifications.

4.5.2.4.6.5. TRAFFIC CONTROL. All traffic maintenance necessary for this project, including but not limited to signage, signalization, barricades, and flagmen, shall be the responsibility of the Contractor. Contractor shall submit his traffic maintenance plan to City Engineering Management minimum ten working days before start of work for their review and approval. No additional payment will be made for this item; it shall be part of the lump-sum bid.

4.5.2.4.6.6. PERMITS. Contractor shall be responsible for obtaining any and all permits necessary for carrying out this project. No additional payment will be made for this item; it shall be part of the lump-sum bid.

4.5.2.5. **PIPE BURSTING.**

4.5.2.5.1. GENERAL. It is the intent of this section to describe acceptable materials and methodologies for rehabilitation of existing sanitary sewers in the City of Bloomington Utilities (CBU) jurisdictional area through the use of a pipe bursting system. This specification is based on the draft "Specification for Mainline Sewer Replacement by Pipe Bursting" currently under development by the International Pipe Bursting Association, a division of NASSCO (National Association of Sewer Service Contractors).

Pipe bursting is a process by which a bursting unit splits or fractures an existing pipe while simultaneously installing a new pipe, usually high-density polyethylene (HDPE), of the same or larger size into the annular space created by the bursting tool's forward movement. The most common methods are referred to as **static**, **impact**, and **dynamic**. The primary difference among these methods is the manner in which the force is generated and transferred to the host pipe during the bursting operation. Static systems are hydraulic, impact systems generally utilize a combination of pneumatic and hydraulic technology, and dynamic systems are based on the use of a horizontal directional drill in combination with either a pneumatic or mechanical bursting tool.

The pipe bursting process is highly dependent on soil conditions, existing pipe material, and the condition of the existing pipe. Burst length, soil conditions, line depth, and new pipe diameter are all critical factors to be considered when planning the pipe bursting process.

The International Pipe Bursting Association (IPBA) normally assigns pipe bursting work to one of three classifications. These classifications are intended for use as general guidelines when considering replacement of existing pipe by bursting techniques.

Project Design Classifications:

4.5.2.5.2. SCOPE OF THE WORK.

Classification	Pipe Depth	Existing Pipe Diameter	New Pipe Diameter Options	Burst Length
A - Routine	<12 ft	4-12 in	Size for Size to 1 Up size	0-350 ft
B – Challenging to Moderately Difficult	>12 ft <18 ft	12-20 in	2 Up Size	350-450 ft
C – Difficult to Extremely Difficult	>18 ft	20-36 in	3 or More Up Sizes	>450 ft

4.5.2.5.2.1. OWNER'S RESPONSIBILITY. The Utilities Engineer shall provide a description of the work to be performed by the Contractor in a Request for Quote or an Invitation to Bid. The Utilities Engineer shall also make available to qualified contractors a copy of a videotape of the pipe to be burst.

4.5.2.5.2.2. BIDDER'S RESPONSIBILITY. The Contractor shall submit a quote or bid for the specified work based on a written and/or graphic description provided by the Utilities Engineer. A quote or bid shall be submitted by the Contractor in the format specified by the Utilities Engineer.

4.5.2.5.3. REFERENCE STANDARDS. American Society for Testing Materials (ASTM), West Conshohocken, PA 14428.

A. ASTM D 1238-99
B. ASTM D 1505 98
C. ASTM D 790-00
D. ASTM D 638-99
E. ASTM D 1693-00
F. ASTM D 3350-99
G. ASTM D 618-99
H. ASTM D 2837-98a
I. ASTM 575

4.5.2.5.4. QUALIFICATIONS OF CONTRACTOR. The Contractor's personnel shall be certified by the system manufacturer as fully trained in utilization of the proposed pipe bursting system. The Utilities Engineer may require the Contractor to provide certificates of training for any employee directly involved in the supervision or operation of the pipe bursting system.

Polyethylene pipe jointing shall be performed by personnel trained in the use of butt-fusion equipment and recommended methods for new pipe connections. Personnel directly involved with new pipe installation shall receive training in the proper methods for handling and installing polyethylene pipe. Such training shall be conducted by a qualified representative of the fusion equipment manufacturer. Installation of other materials shall also be performed by personnel qualified by the specific product manufacturer.

The Contractor shall hold CBU and its agents wholly harmless in any legal action resulting from patent infringements.

CBU will utilize the following chart as a guideline in pre-qualifying Contractor experience requirements:

Job Classification	Job Value	Minimum Requirements
A - Routine	$500,000 or less	Verification by the manufacturer that Contractor's personnel are trained in the use of the equipment.
B – Challenging to Moderately Difficult	$1,000,000 or less	Verification by the manufacturer that Contractor personnel are trained in the use of the equipment. A minimum of 5,000 feet of experience in Class A or more difficult jobs.
C – Challenging to Moderately Difficult	$1,000,000 or more	Verification by the manufacturer that Contractor's personnel are trained in the use of the equipment. A minimum of 5,000 feet of experience in Class A or more difficult jobs. Cumulative Class A and B Income of $1,000,000.
C – Difficult to Extremely Difficult	$1,000,000 or less	Verification by the manufacturer that Contractor's personnel are trained in the use of the equipment. A minimum of 10,000 feet of experience on Class B jobs, to include 3,000 feet of 20" or larger diameter.
C – Difficult to Extremely Difficult	$1,000,000 or more	Verification by the manufacturer that Contractor's personnel are trained in the use of the equipment. A minimum of 10,000 feet of experience on Class B jobs, to include 3,000 feet of 20" or larger diameter. Cumulative Class B and C Income of $1,000,000.

4.5.2.5.5. QUALITY ASSURANCE. The Contractor shall be solely responsible for quality assurance throughout the project. The Contractor shall also be responsible for any costs associated with corrective measures required to replace or repair items not meeting the quality standards specified by CBU.

4.5.2.5.6. SUBMITTALS. The Contractor shall submit the following items for review and approval of the Utilities Engineer in accordance with the Contract Documents. Contractor shall obtain written approval of the submittals by the Utilities Engineer before ordering pipe materials or initiating the pipe replacement process.

A. Verifications of training by the pipe bursting systems manufacturer stating that the operators have been fully trained in the use of the proposed pipe bursting equipment by an authorized representative of the equipment.

B. Evidence of license issued to the Contractor by British Gas or an authorized British Gas sub-licensee.

C. Verification from the pipe manufacturer of training Contractor's personnel in the proper methods for handling and installing new pipe.

D. Verifications of training by the pipe fusion equipment manufacturer that the operators have been fully trained in the use of the fusion equipment by an authorized representative of the equipment manufacturer.

E. Detailed construction procedures including layout plans to include sequence of construction.

F. Locations, sizes, and construction methods for the service reconnection pits.

G. Methods of construction, reconnection, and restoration of existing service laterals.

H. Methods of modification, if required, for existing manholes.

I. Detailed procedures for the installation and bedding of pipe in launching and receiving pits.

J. Bypass pumping plans, including methods and a list of equipment to be utilized.

K. Description of method to remove and dispose of the host pipe, if required.

L. Safety plan in conformance with the Contract Documents and IOSHA regulations.

M. Manufacturer's technical data containing complete information on material composition, physical properties and dimensions of the new pipe and fittings. Manufacturer's recommendations for transport, handling, storage, and repair of pipe and fittings shall be included.

N. Traffic control plans (Must be submitted to City Engineering Management for review and approval minimum 10 working days before start of work).

O. Project Schedule, including schedule of values.

P. Contingency plans for the following conditions:

1. Unforeseen obstruction causes burst stoppage, such as unanticipated changes in host pipe material, repair sections, concrete encasement or cradle, buried or abandoned manhole, or change in direction not depicted on maps provided by CBU.

2. Substantial surface heaving occurring due to depth of the existing pipe vs. the amount of upsizing.

3. Damage to existing service connections and replacement pipe's structural integrity including methods of repair.

4. Damage to other existing utilities.

5. Loss of, and return to, line and grade.

6. Unexpected soil heaving or settlement.

4.5.2.5.7. CONSTRUCTION AND TESTING.

4.5.2.5.7.1. DELIVERY, STORAGE, AND HANDLING OF PIPE AND MATERIALS.

A. The Contractor shall transport, handle, and store pipe and fittings in accordance with the manufacturer's recommendations.

B. New pipe and fittings that are damaged before or during installation shall be repaired or replaced, as recommended by the manufacturer and approved by the Utilities Engineer. The costs of such repair or replacement shall be borne by the Contractor and shall be accomplished prior to installation. Pipe and fittings damaged during or after installation shall be repaired or replaced in accordance with instructions from the Utilities Engineer.

C. The Contractor shall deliver, handle, and store other materials as required to prevent damage. Materials that are damaged or lost shall be repaired or replaced by the Contractor at no additional cost to CBU.

4.5.2.5.7.2. METHODS OF PIPE BURSTING. The most commonly used methods for pipe bursting use static or impact force. Static systems are hydraulic, while impact systems generally involve a combination of pneumatic and hydraulic technology. The primary difference between these methods is the manner in which the force is generated and transferred to the host pipe during the bursting operation.

The pipe bursting tool shall be designed and manufactured to force its way through existing pipe materials by fragmenting the host pipe and compressing the broken pipe sections into the surrounding soil as it progresses. The bursting unit shall generate sufficient force to burst and compact the existing pipeline. See manufacturer's specifications for tool sizes recommended for various pipe diameters as well as parameters associated with tool sizes for allowable upsize percentages.

The pipe bursting tool shall be pulled through the sewer by a cable or rods located at the machine pit. The bursting unit shall pull the polyethylene (PE) pipe behind it as it moves forward from the insertion pit. The bursting head shall incorporate a shield/expander to prevent collapse of the hole ahead of the new pipe insertion. The pipe bursting unit shall be remotely controlled. Sectional replacement pipe shall be pushed as well as pulled behind the bursting head.

The following are different types of pipe bursting equipment:

A. **On-line Pipe Bursting:** On-line pipe bursting is done by creating an impact load in the pipe by applying a "hoop" stress into the pipe and causing it to burst in tension. The dynamic Bursting System consists of a 24,000, 33,000, 50,000 class Horizontal Directional Drill and a Pneumatic (Air Impactor™) or Mechanical (Rotary Impactor™) bursting tool. Both the Air and Mechanical Impactor rely on percussive hammering action to fragment the host pipe through which the tool travels. Simultaneously, the new replacement pipe is installed into the space created by the bursting tool. The Horizontal Directional Drill is used to drill from the surface down to and through the section(s) of pipe to be replaced, then back to the surface where the appropriate bursting tool is attached to the drill rod. The Horizontal Directional Drill then pulls the bursting tool into the old pipe providing a constant tension pulling force and maintaining correct line and grade while the tool bursts the pipe. The technique is aimed at the replacement of gravity pipes as well as pressure pipes, and has been used in diameters ranging from 4 inches to 54 inches and larger.

B. **Pneumatic Pipe Bursting:** Pneumatic pipe bursting is done by creating an impact load in the pipe by applying a "hoop" stress into the pipe causing it to burst in tension. This technique uses a pneumatic bursting head with a properly sized expander and relies on percussive hammering action to break up the old pipe through which the tool travels. Simultaneously, the new pipe is installed into the space created by the pneumatic bursting head and expander. A winch cable is attached to the nose of the bursting head to maintain correct line and grade by providing

constant pulling tension and enhancing the percussive force. Winching forces up to 20 tons are typical for this method. This technique is mainly aimed at the replacement of gravity pipes as well as pressure pipes, and has been used in diameters ranging from 4 inches to 54 inches and larger.

C. **Hydraulic Pipe Bursting:** Rather than the pipe being burst from the transfer of pulling or hammering radial force into the plane of the pipe diameter, the bursting head diameter expands, fragmenting the pipe from the inside. The bursting head is equipped with "petals" which open and close under hydraulic pressure. Using hydraulic cylinders, the bursting head first expands to crack the host pipe, then contracts to allow the winch to pull the pipe string forward, while tension is applied to the nose of the head using a winch cable to maintain directional stability. Hydraulic bursting is primarily used for in-line replacement of gravity sewers 6 inches to 20 inches in diameter or larger.

D. **Static Pipe Bursting:** In static pipe bursting a pulling force is applied to a tapered or blunt-nosed bursting head through steel rods, chain, or cable, and new pipe is new pipe is pulled behind the bursting head through the fragmented host pipe. In this process, the host pipe fails in tension created by the radial force applied to the pipe wall from the bursting head. As the bursting head advances, the host pipe is fragmented and compressed into the adjacent soil, and the new pipe is simultaneously installed into the void. The static pipe bursting winch equipment is modeled after high-powered hydraulic jacks, mounted horizontally, or a high-tension drum type of winch. Pulling forces of up to 225 tons are typical for this method. This method is used in pipes 4 inches to 40 inches in diameter and larger.

4.5.2.5.7.3. REPLACEMENT PIPE MATERIALS. Replacement pipe materials shall be as specified in the Special Conditions and Contract Documents and shall be one of the following:

A. **Polyethylene Plastic Pipe:** Polyethylene Plastic Pipe shall be high-density and meet the applicable requirements of ASTM F714 Polyethylene (PE) Plastic Pipe (SDR-PR) Based on Outside Diameter or AWWA C906, ASTM D1248 and ASTM D3350.

B. **Ductile Iron Pipe:** Ductile Iron Micro-Tunneling Pipe shall meet the requirements of AWWA C110 and shall be specifically designed for jacking by the pipe manufacturer.

C. **Polyvinyl Chloride (PVC) Pipe:** Polyvinyl Chloride Pipe shall be a restrained joining type such as Certa-Lok™ or Yelomine™ and conform to the requirements of ASTM D2241 and/or AWWA C900 or C905, with a DR 11 rating.

4.5.2.5.7.4. LOCATING UTILITIES. CBU will furnish the Contractor with all available documents relevant to the location of all known utilities adjacent to the pipe to be replaced. Prior to commencing work, the Contractor shall field-verify the location of all adjacent utilities and shall expose all interfering and crossing utilities by spot excavating or "pot-holing" at the planar intersection of utilities with the pipe to be replaced and removing the soil from around the utility. The cost of exposing these utilities shall be included in the lump-sum bid.

4.5.2.5.7.5. SUB-SURFACE CONDITIONS. CBU will furnish to the Contractor all available information regarding sub-surface conditions. The Contractor shall verify this information in the field. All additional sub-surface investigations deemed necessary by the Contractor must be approved in advance and in writing by the Utilities Engineer, and shall be included in the Quote or Bid Proposal at no additional cost to CBU. Settlement or heaving of the ground surface during or after construction will not be permitted. The Contractor shall be solely responsible for the costs of repairing any surface heaving or any damages resulting therefrom. However, at the discretion of the Utilities Engineer, if soil conditions are not favorable and pipe up-sizing is required, a minimal amount of ground heaving may be allowed.

4.5.2.5.7.6. LOCATING SERVICE CONNECTIONS. In order to expedite reconnection of services, the Contractor shall locate and expose all sanitary sewer service connections prior to pipe insertion. The

Contractor shall exercise due diligence in excavating the existing pipe sufficiently to allow for uniform circumferential expansion of the existing pipe through the service connection pit. Upon commencement of the bursting process, pipe insertion shall be continuous and without interruption from one entry point to another, except as approved by the Utilities Engineer. Upon completion of insertion of the new pipe, the Contractor shall expedite the reconnection of all services to minimize inconvenience to the customers.

4.5.2.5.7.7. PIPE JOINING. The polyethylene pipe (HDPE) shall be assembled and joined at the site using the butt-fusion method to provide a leak-proof joint. Threaded or solvent cement joints are not permitted. Fusion shall be performed by technicians certified by a manufacturer of pipe fusion equipment. The butt-fused joint shall be in true alignment and shall have uniform roll-back beads resulting from the proper use of temperature and pressure. The joint shall be allowed adequate cooling time before removal of pressure. The fused joint shall be watertight and shall have tensile strength equal to or greater than that of the pipe. All joints shall be subject to review and approval by a CBU inspector prior to insertion. The Contractor shall cut out and replace defective joints at no additional cost to CBU. Any section of pipe with obvious deleterious faults may be rejected in its entirety by the Utilities Inspector. However, a defective area of the pipe may be cut out and the joint fused in accordance with the processes stated above.

4.5.2.5.7.8. BYPASSING OF FLOWS. During execution of the work, the Contractor shall be responsible for continuity of sanitary sewer service to each facility connected to the affected section(s) of sanitary sewer main, and shall bypass the flow around the section(s) of pipe to be replaced. The pumps and bypass lines shall be of adequate capacity and size to handle all flows without overflows or backups of sewage to private properties. The Contractor shall be solely responsible for clean-up, repair, property damage costs, and claims resulting from failure of the diversion system.

The Contractor shall present a detailed bypass pumping plan to the Utilities Engineer for his review and approval. This shall include specifications for all pumping equipment, as well as all backup pumping equipment to be held in reserve on the job site. Pumps and by-pass lines shall be of sufficient capacity and size to handle all flows.

All costs for by-pass pumping required during the installation of the pipe and reinstatement of laterals shall be included in the Quote or Bid Proposal at no additional cost to CBU.

4.5.2.5.7.9. PARAMETERS AND CONDITIONS.

4.5.2.5.7.9.1 HOST PIPES SUITABLE FOR BURSTING. CBU will identify the host pipe material and size in the Special Conditions and Contract Documents. Host pipe will be one of the following:

A. **Vitrified Clay Pipe** (VCP) in the 4 inch to 42 inch diameters commonly used in sanitary sewers is very brittle and can be readily burst. The ability to fracture the pipe and compact the fragments into the surrounding soil make it an ideal host pipe. It should be noted that concrete encased point repairs, and concrete adjacent to manholes or structures, may interfere with, or even halt, the bursting process.

B. **Concrete Pipe** of all sizes has been commonly used in sanitary sewers, and may or may not contain steel reinforcement. Normally, 12 inch diameter and smaller is non-reinforced concrete pipe and fractures similarly to VCP. The amount of reinforcement, i.e. single or double cage, will normally dictate the burst type selection and success.

C. **Cast Iron Pipe** (CIP) has been used in sanitary sewers and can be very brittle, but slightly different from VCP. Although it fractures easily, it requires special leading equipment to protect the winch rope from damage. Bell and spigot type joints for CIP require a blade-type nose extension to help crack the relatively large cross-section of material contained in the joint, i.e. lead, jute or hemp, asphalt and/or elastomeric materials. A new HDPE pipe being installed in CIP should have a DR 17 or lower to prevent sharp fragments from damaging the pipe.

D. **Asbestos Cement** (AC) pipe has been used in all utilities and exhibits good bursting features similar to VCP. AC pipe contains asbestos material, which is carcinogenic. Therefore, pipe bursting is much safer than direct excavation and replacement.

E. **Plastic Pipes** (i.e. PVC, PE, ABS, et al) all possess varying material characteristics. Most plastics must be split longitudinally using special cutting blades on nose extensions. This may not permit sufficient soil expansion and create higher levels of friction on the new pipe being pulled in. Normally the fragments are strips and do not cause damage to the new pipe.

F. **Steel and Ductile Iron Pipe** (DIP) must be split by blades. This process is used in lieu of ripping, bursting, or tearing the metal pipe.

4.5.2.5.7.9.2. HOST PIPE SIZE. Host pipe size will effect both hammer/expander combinations and winch selection. Small diameter pipe in difficult soil conditions can present problems because a larger, more powerful hammer will not fit inside the host pipe. Special nose tools may be adapted to solve these problems.

4.5.2.5.7.9.3. HOST PIPE DEPTH. The depth of the host pipe affects the bursting process in a number of ways, such as:

A. Existence of groundwater or greater groundwater depth requires dewatering, or additional dewatering.

B. Soil expansion subsequent to the pipe burst may become more difficult due to the additional soil weight.

C. Depending on the type of soil, upsizing new pipe may require additional soil expansion.

D. Entrance and exit pits will require additional shoring due to required safety procedures.

E. The magnitude of an allowable bend in alignment may require reduction due to the additional soil load.

4.5.2.5.7.9.4. SURROUNDING SOIL TYPES. The type of soil surrounding the host pipe should be identified. Some soil types are easily expanded and may remain in the expanded diameter permitting relative ease of new pipe pull-in. Other soils may be loose and/or running, and may require the use of Bentonite or polymers that provide some structural support, permitting new pipe pull-in. Very weak soils may not support the weight of the pipe bursting equipment, and should be avoided.

4.5.2.5.7.9.5. NEW PIPE AND SIZE. Most pipe bursting projects utilize fused lengths of HDPE pipe. The wall thickness of HDPE is identified by its dimensional ratio (DR) for a given size. The lower the DR the greater the wall thickness. Required pipe DR for a project will be clearly stated in the Special Conditions or Bid Documents.

The ability to upsize or install a new pipe larger in diameter than the host pipe is unique to pipe bursting. The amount of upsize is limited by a combination of all the host pipe parameters, and generally upsizing by one or two sizes can be accomplished (e.g., 6-inch to 8-inch or 6-inch to 10-inch, constituting a 33% to 67% increase in diameter).

4.5.2.5.7.9.6. SERVICE EXCAVATIONS. Contractor shall locate all service laterals in advance by CCTV inspection of the host pipe. All service connections shall be exposed prior to bursting to prevent damage and facilitate and expedite service reinstatement. Excavation of service lateral pits shall allow for equal 360° expansion of the host pipe during bursting.

4.5.2.5.7.9.7. LAUNCHING AND EXIT PITS. Whenever possible, pits shall be located outside traffic areas and generally near manholes to permit gradual entry of the bursting equipment and the new pipe

into the host pipe. Length of launch pit should generally be 2.5 times the depth of the existing pipe. Steep entries may put excessive strain and friction on the new pipe. Exit pits must be sized to permit removal of pipe bursting equipment and to allow connection of the new pipe to the manhole. The pipe shall be installed and bedded to correct line and grade within the launching and exit pits.

4.5.2.5.7.9.8. BURST LENGTH. Most proposed sewer burst lengths are from manhole to manhole. Longer bursts are possible, but are heavily dependent on the diameter of the host pipe, amount of upsizing, depth, and soil conditions. The use of lubricants is usually recommended as a means of facilitating longer burst lengths.

4.5.2.5.7.9.9. MANHOLE PREPARATION. Entry and exit holes in the manhole must be enlarged to permit the pipe bursting equipment and the new pipe to pass through and remain on grade. This may also necessitate modifications to manhole table and trough.

4.5.2.5.7.9.10. GENERAL GUIDELINES FOR USE OF LUBRICANTS.

A. When new pipe is equal to, or greater than, two times the diameter of the host pipe.

B. When burst length exceeds 300 feet.

C. When diameter of new pipe exceeds 12 inches.

D. When host pipe is below the water table.

E. When free-flowing soil conditions exist.

F. When recommended by the manufacturer of the pipe bursting equipment.

4.5.2.5.7.9.11. PROJECT CONSIDERATIONS. The following variables shall be considered when determining the method and length of run of a pipe bursting project:

A. Consider the depth of the existing pipe and the replacement pipe. The minimum depth of cover over the host pipe shall be two to three times the diameter of the new pipe, or four feet, whichever is greater. With written approval of the Utilities Engineer, the minimum depth of cover may be reduced.

B. Consider material and present condition of the host pipe. A CCTV inspection must be made.

C. Consider the diameter and profile of the host pipe.

D. Consider condition and type of surrounding soil.

E. Consider topography of the ground surface above the host pipe.

F. Consider adjoining utilities and services. Minimum horizontal clearance from other utilities shall be five feet or greater, and minimum vertical clearance shall be two feet or greater. With written approval of the Utilities Engineer, these minimum clearances may be reduced. All interfering and crossing utilities must be carefully located and may need to be exposed prior to pipe bursting.

G. Consider service excavations.

H. Consider material and wall thickness of the new pipe.

4.5.2.5.7.10. RECONNECTION OF SERVICES. After a suitable pipe relaxation period, as approved by the Utilities Engineer, the Contractor shall reconnect all services to the newly installed main. The newly

installed pipe shall be allowed the manufacturer's recommended period of time for cooling and relaxation due to tensile stressing prior to reconnection of service lines. Service lines shall be reconnected to the new pipe by using connectors approved by the pipe manufacturer and the Utilities Engineer, and in conformance with the specified installation procedures. Service connections shall be cast or ductile iron with stainless steel strap and elastomeric gasket, or electro fusion. Submittals for connectors will be reviewed and approved by the Utilities Engineer. Connections to the existing service line shall utilize non-shear couplings.

4.5.2.5.7.11. RESTORATION.

4.5.2.5.7.11.1. RESTORATION OF MANHOLES. The Contractor shall restore all manholes and associated surface areas to their original condition or as required by CBU and specified in the description of work. Prior to restoring manholes, the installed pipe shall be allowed the manufacturer's recommended amount of time, but not less than four (4) hours, for cooling and relaxation due to tensile stressing, prior to sealing the annulus or backfilling the insertion pit. Sufficient excess of pipe, but not less than two (2) to four (4) inches, shall be allowed to protrude into the manhole to provide for occurrence. Restraint of pipe ends within the manhole shall be achieved by means of Central Plastics Electro Fusion coupling, or approved equal. The electro fusion couplings shall be slipped over the protruding pipe ends to rest against the manhole wall and fused in place. Installation of electro fusion couplings shall be done in accordance with the manufacturer's recommended procedures. The annular space shall then be sealed with OCTOCRETE non-shrink waterproof mortar (IPA Systems, Inc.).

Restoration of tables and troughs shall be as follows: Unless otherwise instructed in the Special Conditions, Contractor shall renovate trough and table so that the invert channel has a semi-circular bottom and vertical sides extending upwards to the pipe crown. The table shall be smooth and slope towards the channel not less than one inch (1″) per foot. For restorations up to three inches (3″) thick, Contractor shall use a grout mix exceeding 500 psi compressive strength at 28 days. For restorations greater than three inches thick, concrete brick and non-shrink mortar shall be used. Finished surface of both table and trough shall receive two coats of DRYCON (IPA Systems, Inc.).

4.5.2.5.7.11.2. RESTORATION OF PITS. Contractor shall restore all lateral pits, launching pits, and other areas disturbed by construction, to their original conditions or as specified in the Special Conditions. Prior to backfilling lateral and launching pits, the Contractor shall ensure that #11 or #12 crushed stone bedding is shovel-sliced beneath the new pipe to provide support and prevent sagging after backfill and compaction. #11 or #12 crushed stone backfill shall extend minimum 12 inches above the pipe crown.

4.5.2.5.7.12. CCTV INSPECTION. The Contractor shall perform post-installation closed circuit color television inspection of the newly installed pipe. A video tape of this inspection including audio description and printed stationing of all defects and service laterals shall be made by the Contractor. All such inspections shall be made by personnel trained to locate and identify deficiencies, breaks, obstacles, and service laterals. Said post-construction video tapes shall be presented to CBU for review prior to final payment. Should any portion of the inspection tapes be of inadequate quality or coverage as determined by the Utilities Engineer, the Contractor shall re-inspect the unacceptable portion at no additional expense to CBU. All submitted video tapes shall remain the property of CBU. The Contractor may, at the discretion of CBU, retain a second copy.

4.5.2.5.8. MEASUREMENT AND PAYMENT. Application for partial payment shall normally be submitted no more than once a month for work accomplished up to the cut-off date supplied by CBU. Payment shall be based on a Schedule of Payments supplied in advance of construction by the Contractor and approved by the Utilities Engineer, and shall be made in accordance with the terms and conditions of the contract. The price per foot of installed pipe as specified shall include full compensation for furnishing all labor, materials, tools, equipment, and back-up equipment necessary for carrying out the pipe bursting activity and all associated tasks as described in the Special Conditions and Contract Documents. Pipe shall be measured along the longitudinal axis between the manhole centerlines. Replacement and modification of manhole troughs and tables shall be considered part of the pipe bursting process, and no

additional compensation will be made for this work unless otherwise addressed in the Special Conditions and Contract Documents.

Alternately, payment may be based on a payments schedule developed by the Design Engineer and the Utilities Engineer and included in the Request for Quote or Invitation to Bid.

4.5.3. **INSTALLATION OF WATER MAINS.** This section describes the specific methods and general practices to be used in installation of water mains. Water mains shall be laid in accordance with the latest revision of AWWA C600 or AWWA M23.

4.5.3.1. GENERAL.

4.5.3.1.1. MAINTAINING EXISTING WATER SERVICES Contractor shall provide for non-interruption of existing services at all times during the project, except when service line transfers are being performed. With the bid proposal, Contractor shall enumerate in detail the measures proposed for providing non-interruption of existing services.

4.5.3.1.2. INSPECTION BEFORE INSTALLATION. All pipe and fittings shall be carefully examined for cracks and other defects while suspended above the trench immediately before installation. Spigot ends shall be examined with particular care, as they are most vulnerable to damage from handling. All gaskets shall be examined for tears or irregularities.

4.5.3.1.3. CLEANING OF PIPE AND FITTINGS. Both the spigot and the inside of the bell shall be wiped clean and dry and free from dirt, oil and grease before lubricant is applied and the pipe is laid.

4.5.3.1.4. BELL ENDS TO FACE DIRECTION OF LAYING. Pipe shall be laid with bell-ends facing in direction of laying unless otherwise directed by the Engineer. Where pipe is laid on a grade of 10 percent (10%) or greater, the laying shall start at the bottom and shall proceed upward with the bell-ends of the pipe facing upgrade. Anchors shall be required for stabilization on all pipe having a slope greater than 20%.

4.5.3.1.5. PERMISSIBLE DEFLECTION AT JOINTS. Wherever it is necessary to deflect pipe from a straight line, either in the vertical or horizontal plane, to avoid obstructions or to plumb stems, or where long-radius curves are permitted, the amount of deflection allowed shall not exceed that allowed by the pipe manufacturer.

4.5.3.1.6. CROSSING EXISTING UTILITIES. Where the new main crosses existing utilities, the main shall be laid *under* the existing pipe where necessary to obtain minimum cover (48").

4.5.3.1.7. DEAD-END WATER MAINS. The Contractor shall install a gate valve and one length of pipe at the end of any dead-end line which might obviously be extended. The pipe shall be capped or plugged and anchored with a metal clamp and concrete collar at the midpoint as indicated in the Standard Drawings.

4.5.3.2. INSTALLATION OF PIPE. This subsection specifies installation methods for pipes made of ductile iron and polyvinyl chloride.

4.5.3.2.1. INSTALLATION OF DUCTILE IRON PIPE (DIP). All installation of DIP shall conform to the latest revision of AWWA C600. DIP shall always be handled with straps (no chains) to avoid damage to external coating. Any such damage must be repaired by Contractor at no additional cost to Owner.

4.5.3.2.1.1. PUSH-ON JOINTS. Push-on joints shall be assembled in accordance with the instructions and recommendations of the manufacturer. Each spigot end shall be suitably beveled to facilitate

assembly. Approved pipe lubricant shall be applied to joint surfaces immediately before seating. Lubricant shall be stored in closed containers to maintain cleanliness.

4.5.3.2.1.2. MECHANICAL JOINTS. Mechanical joints shall be assembled in accordance with the manufacturer's recommendations. If effective sealing is not achieved, the joint shall be disassembled, thoroughly cleaned, and reassembled. Overtightening of bolts to compensate for poor installation practice will not be permitted.

4.5.3.2.1.3. BEDDING AND BACKFILL FOR DIP. Bedding to be as stated in 4.5.1.4.1. Backfill to be as stated in 4.5.1.6. and following.

4.5.3.2.1.4. FIELD-CUTTING DIP. See 4.5.2.1.3.1.

4.5.3.2.1.5. DIFFERENT METALLIC PIPE MATERIALS. Wherever it is necessary to join DIP with pipe of a dissimilar metal, the Contractor shall provide a method of insulating against the passage of electric current to be approved by the Engineer.

4.5.3.2.2. INSTALLATION OF POLYVINYL CHLORIDE (PVC) PIPE. PVC pipe is NOT an approved material for construction of 6” and larger water mains within the City of Bloomington water jurisdiction. In special instances the Utilities Engineer may give written permission to utilize PVC pipe in construction of water mains which are to remain private. This will be done on a case by case basis. In no case shall pressure class be less than 200 psi.

PVC pressure pipe may be used in construction of 2-inch or 4-inch water mains to be taken over and maintained by City of Bloomington Utilities. In such case the 2-inch pipe shall be SDR-21 (PR200), and the 4-inch pipe may be either SDR-21 (PR200) or C900 (DR-14).

2-inch PVC water mains shall be connected to existing water mains by mounting a 2-inch tapping saddle on the main to be tapped and connecting a 2-inch corporation stop to the saddle. After the tap has been made, Contractor shall install an iron pipe to flared copper fitting (corporation nut) on the corporation stop. Contractor shall then thread one end of a 6-inch long, 2-inch diameter brass nipple into the corporation nut. Contractor shall connect a 2-inch brass-bodied, full-port IPS ball valve with a Teflon coated ball to the other end of the nipple, then connect another 6-inch long, 2-inch diameter brass nipple into the other side of the ball valve. Contractor shall then connect a PVC or brass compression coupling to the other end of the nipple. The compression coupling shall connect to the new 2-inch SDR-21 PVC pipe. Pipe restraint shall employ Uni-Flange Series 1300, 1350, or 1390 pipe restraints. All service lines connecting to 2-inch PVC mains shall be 1-inch type K copper and shall connect by means of a self-tapping unit with compression connector outlet. Self-tapping unit shall be **FastTap**, as manufactured by **Continental Water Products**, or pre-approved equal.

4-inch PVC water mains shall be connected to existing water mains by means of a 4-inch tapping saddle and a 4-inch tapping valve in accordance with 4.4.4.2.4. and 4.4.4.2.5. When the tap has been made, Contractor shall connect the new 4-inch SDR-21 PR200 or C900 DR-14 PVC pipe to the valve by using an EBAA Series 3100 or Uni-Flange Series 1300 pipe restraint. A transition gasket is required when connecting SDR-21 pipe to the valve. Additional mechanical restraint on the new main shall be in accordance with 4.5.3.4.1.2.

Both 2-inch and 4-inch valves shall be equipped with road type valve boxes. Meter setup for 2-inch mains shall be in conformance with City of Bloomington Utilities Standard Detail Number 15.

A #10 insulated solid copper wire shall be wrapped around all PVC pipe so that one revolution is made at least every pipe joint. Splices are to be made with an approved connector, and are to be suitably protected against corrosion. Where the main is laid off the road, the wire is to be brought to the surface approximately every 500 feet to an air valve vault, a metal sign post, or a valve box. Where the main is

laid in the street, the wire is to be brought into a valve box approximately every 500 feet. Sign and metal post shall be furnished by the Utilities Department; valve boxes to be furnished by Contractor.

4.5.3.2.2.1. FIELD-CUTTING PVC PIPE. See 4.5.2.1.1.1.1.

4.5.3.2.2.2. BEDDING AND BACKFILL FOR PVC PIPE.

4.5.3.2.2.2.1. PVC PIPE 6" AND LARGER IN DIAMETER. Bedding to be as stated in 4.5.1.4.1. Backfill to be as stated in 4.5.1.6. and following.

4.5.3.2.2.2.2. PVC PIPE LESS THAN 6" IN DIAMETER. Pipe shall be bedded on 4" of fill sand, and fill sand shall extend 4" above the top of pipe.

4.5.3.2.3. INSTALLATION OF PRESTRESSED CONCRETE CYLINDER PIPE. Installation shall be as directed in AWWA Manual M9, **Concrete Pressure Pipe**.

4.5.3.3. INSTALLATION OF FIRE LINES. Owner or Contractor must contact Utilities Engineering and complete an Application Request for Fire Line Connection before start of construction. All fire lines shall remain private, from the tap on the City main to the extremity. Pipe material shall be ductile iron unless special permission for use of other pipe material is given by the Utilities Engineer. All fire lines shall be equipped with a check valve and a bypass detector meter. The check valve shall be AMES Silver Bullet, Model 3000ss double check detector assembly. Check valve, bypass detector meter, and piping shall all be sized by a fire system designer according to fire flow demands and area system pressure and flow. This assembly shall be located as close to the City main as possible, and shall be installed in a pit in accordance with CBU Standard Detail Number 7. The exact location of pit must be approved in advance by Meter Services. Pit shall be provided with an aluminum door, minimum 3' by 3', hinged, latching, locking when specified, brand and model to be approved by the Utilities Engineer. Door to be centered over the meter or meters to facilitate reading. All fire lines shall terminate in an MJ by flanged gate valve at the base of the riser. No connection shall be made to any fire line until successful completion of both pressure and purification tests.

If a fire line is tapped for domestic service, the tap must be made ***before*** the detector check assembly and a valve must be provided between the tap and the assembly to permit work on the assembly without interruption of service. The domestic meter may be placed in the same pit with the check assembly. If a fire line is ***not*** tapped for domestic service, and the check assembly is ***not*** adjacent to the City main, a second check valve may be required adjacent to the City main.

It is the responsibility of the system designer to verify all existing conditions of flow, pressure, pipe size, and number and configuration of fittings. This shall be clearly stated in design calculations to be submitted with the Application for Service. Any changes in the field must be approved in writing by the system designer. Contractor shall pressure test all fire lines at 200 psi for two hours, in accordance with the State Fire Marshall's code. All fire lines shall be sterilized (see 4.5.3.5.1.), and purification tested (see 4.5.8.2.2.) by the Contractor. All tests on fire lines shall be monitored and supervised by a CBU inspector.

4.5.3.4. INSTALLATION OF FITTINGS AND APPURTENANCES.

4.5.3.4.1. THRUST RESTRAINT. The configuration of a water main results in unbalanced hydrostatic or hydrodynamic forces which, unless restrained, can result in joint separation. All fittings such as valves, tees, bends, plugs, etc. must be adequately restrained against thrust forces. There are two common methods of transferring thrust forces to the soil surrounding the pipe, thrust blocks ("kickers") and joint restraint.

4.5.3.4.1.1. THRUST BLOCKS. The use of thrust blocks as a means of thrust restraint on water mains will be permitted only on a case-by-case basis with written permission of the Utilities Engineer. The only exception shall be the concrete thrust block placed on the opposite side of an existing water main when making a hot-tap. Instead of thrust blocks, mechanical joint restraints shall be used.

4.5.3.4.1.2. RESTRAINED JOINTS. A restrained joint is a special mechanical joint or device that is designed to mechanically couple a calculated number of adjacent joints of pipe together. The entire restrained unit of pipe is then able to transfer thrust forces to the surrounding backfill by friction. Use of joint restraints will be required for all water projects within the CBU water jurisdictional area. Design of a joint restraint system consists of determining the length of pipe that must be restrained on each side of the focus of a thrust force. This will be determined by pipe size, design pressure, depth of cover, and the characteristics of the soil surrounding the pipe. The engineer who designs a water main shall be responsible for incorporating a comprehensive thrust restraint design into his plans. It will not be sufficient to simply include a thrust restraint design table in the detail sheet. The design engineer shall make clear to the contractor in the plan and profile drawings exactly which joints shall be restrained, and which mechanical joint restraints are suitable for each application. The thrust restraint design will be reviewed as a part of standard plan review by CBU Engineering, but the design engineer shall be ultimately responsible for the accuracy and effectiveness of his thrust restraint design for each project.

The following mechanical restraints are acceptable for use as listed so long as they have a **minimum pressure rating of 200 psi**:

For Restraining Mechanical Joint Fittings:
EBAA Series 1100 for DIP
EBAA Series 2000PV for C900 PVC, and SDR 21 PR200 PVC
Uni-Flange Series 1300-C for C900 PVC
Uni-Flange Series 1300-S for SDR-21 PR200 PVC
Uni-Flange Series 1400 for DIP

For Restraining Push-on C900 PVC Fittings:
EBAA Series 2500
Uni-Flange Series 1360-C

For Restraining Push-on C900 PVC Pipe Joints:
EBAA Series 1600 (4″ through 12″)
EBAA Series 2800 (14″ through 30″)
Uni-Flange Series 1350-C
Uni-Flange Series 1390-C

For Restraining Push-on SDR-21 PR200 PVC Pipe Joints:
EBAA Series 6600 (3″ through 12″)
Uni-Flange Series 1350-S
Uni-Flange Series 1390-S

For Restraining Push-on DIP Joints:
EBAA Series 1100 HD
EBAA Series 1700
Uni-Flange Series 1450

For Restraining Mechanical DIP Joints:
EBAA Megalug
EBAA Series 1100
Uni-Flange Series 1400

4.5.3.4.2. INSTALLATION OF HYDRANTS. Connection of fire hydrant arm to new main shall be made by using a mechanical joint tee in the main line. The line valve on the hydrant arm shall be connected directly to this tee by use of an anchor coupling. The hydrant shall be connected to the other end of the fire arm by a mega-lug gland, and the hydrant shall be rigidly blocked and braced against thrust. For connection to existing mains, a tapping sleeve and valve may be substituted for the tee/anchor coupling/gate valve assembly. Any deviation from these two methods requires prior approval from the Utilities Engineer and shall be indicated on the plan drawings.

Contractor shall provide a generous envelope of #5 stone around the drain ports to assure barrel drainage of hydrants. Envelope is to be minimum two feet (2') in diameter and six inches (6") above ports.

Contractor shall set ground line mark on hydrant two inches (2") above finished grade.

4.5.3.4.3. INSTALLATION OF FLUSH HYDRANTS. All flush hydrants, whether installed in grassy areas or pavement, shall be **Gil model Aquarius 101 GHS, 2-inch Slim Line Hidden Hydrant**, or **Kupferle Model TF500 Flush Hydrant** (www.hydrants.com). All flush hydrants shall be installed in a traffic-rated six-inch valve box with lid. A 2-inch, brass-bodied, double O-ring, full-port valve with a Teflon coated ball shall be installed immediately before either type of flush hydrant. Valve shall be equipped with road type valve box.

4.5.3.4.4. INSTALLATION OF VALVES. All valves shall be properly restrained, as detailed in the Standard Drawings.

Butterfly and gate valves shall be set vertically. Flanged valves shall be securely bolted utilizing red rubber gaskets and high-strength rustproof steel bolts and nuts. In all areas where system static pressure is greater than 90 psi, cloth insert gaskets as manufactured by BILTRITE or approved equivalent shall be used.

All gate valves shall be buried and have road boxes unless otherwise specified.

All butterfly valves shall be installed in a precast concrete manhole with a minimum interior diameter of 5 feet. The dimensions of larger valves may require 6-foot I.D. manholes. Manhole base shall be minimum 6 inch poured in place Class A concrete having a minimum compressive strength of 4,000 psi, over minimum 4 inches of either #11 or #12 stone bedding. Base shall be provided with a minimum 1' by 1' drain. Manhole casting shall be East Jordan 1020 series with a self-sealing, non-rocking lid imprinted with the word "WATER".

4.5.3.4.5. INSTALLATION OF LINE VALVES. When installing a line valve adjacent to a junction with a new main, a mechanical joint tee shall be installed in that new main, and the line valve shall be connected directly to that tee by an anchor coupling. For connection to existing mains, a tapping sleeve and valve may be substituted for the tee/anchor coupling/gate valve assembly. Any deviation from these two methods requires prior approval from the Utilities Engineer and shall be indicated on the plan drawings.

4.5.3.4.6. INSTALLATION OF TAPPING VALVES. Tapping valves shall be installed by the Contractor and the tap made by City Utilities. Tapping valve connections to existing mains shall be made at the locations shown on the plans. Exact locations of existing mains shall be verified in the field by the Contractor. Contractor shall position tapping valve at best location as determined in the field by the Engineer or his agent, and no extra payment will be made for any relocation.

Tapping valve and sleeve installation shall be made in accordance with the detail in the Standard Drawings. Valves shall be securely supported in vertical position during the tapping operation. Backfill material shall be thoroughly tamped around and under valve after installation. Valve shall be checked for leaks before backfilling. Thrust restraint shall be provided at all appropriate locations.

4.5.3.4.7. INSTALLATION OF AIR RELEASE VALVES. Air release valves and appurtenances shall be installed in a manhole as shown in Standard Detail #3. A saddle with a two-inch (2") tapping corporation shall be installed on the top of the main at the high point formed by sloping two adjacent joints to a summit.

4.5.3.4.8. INSTALLATION OF VALVE BOXES. Valve boxes shall be set squarely over the wrench nut and in a vertical position. Tops shall be flush with the finished grade and readjusted as necessary to conform to the surface until final settlement or paving is complete.

All valve boxes which are *not* in pavement shall be centered in a six inch thick concrete pad, measuring 18 inches on each side.

4.5.3.4.9. INSTALLATION OF VALVE MARKERS. At each sectionalizing valve, a marker pipe shall be set at the right-of-way line laterally adjacent to the valve. If this is not possible due to some conflict, the marker shall be set where directed by the Engineer. A marker will also be required at each air release valve vault. Setting of markers shall be as detailed in the Standard Drawings. No extra payment will be made for markers or their setting; such cost must be included in the price of the valves.

4.5.3.5. FILLING, STERILIZATION, AND FLUSHING OF WATER MAINS. Contractor shall fill, sterilize, and flush all new mains, leads, and appurtenances in accordance with the latest revisions of AWWA C600, C601, and C651.

4.5.3.5.1. FILLING, STERILIZATION, AND FLUSHING PROCEDURE. As each length of pipe is laid, Contractor shall affix an appropriate number of 5 gram Hypochlorite tablets inside the top of the pipe barrel using Permatex #1 adhesive or approved equivalent. There shall be no adhesive on the tablet except on the broad side attached to the surface of the pipe. Pipe must be installed with tablets at the top. The following table indicates the number of 5 gram Hypochlorite tablets required per pipe section as indicated in the latest revision of AWWA C651.

		Length of Pipe Section in Feet (m)				
		13 (4.0) or less	**18 (5.5)**	**20 (6.1)**	**30 (9.1)**	**40 (12.2)**
Pipe Diameter						
in inches	**(in mm)**		**Number of 5-g Hypochlorite Tablets**			
4	(100)	1	1	1	1	1
6	(150)	1	1	1	2	2
8	(200)	1	2	2	3	4
10	(250)	2	3	3	4	5
12	(300)	3	4	4	6	7
16	(400)	4	6	7	10	13

Also, one such tablet shall be placed in each hydrant, hydrant branch, and other appurtenance.

The main shall then be slowly filled with water from the City distribution system at a velocity no greater than one foot per second. Air shall be expelled from the main as it is filled, by use of air valves or hydrants at the high point of the main. Where such vents are not available, Contractor shall install a

corporation cock at the high point to assure air removal. When tablets have dissolved, a chlorine residual of not less than 10ppm shall remain in the water after the 48-hour disinfection period has passed.

Valves shall be manipulated so that the strong chlorine solution in the line being treated is not allowed to flow back into the City distribution system. Following chlorination, all treated water shall be flushed from the new main at its extremity, for a period of time determined by the Utilities Engineer, so that the water quality matches that in the City distribution system. All valves shall then be closed until bacterial testing is performed. If for some reason additional flushing is required, City of Bloomington Utilities Department reserves the right to charge Contractor for the water at the standard rate.

If this water is flushed into the sanitary sewer system, the Utilities Department reserves the right to charge the Contractor a sewage treatment fee for that volume of water. Flushing into the sanitary sewer system is never to be performed during wet-weather conditions.

Before the new main is put into use, the City must test the water from the main for bacterial contamination, and monitor the Contractor's pressure and leakage test. All testing is to be completed within one week after construction is finished. No connections to the main will be permitted until *all* testing is complete.

4.5.3.6. SERVICE CONNECTIONS.

4.5.3.6.1. Contractor will *not* be permitted to tap *existing* water mains; this must be done by City of Bloomington Utilities.

4.5.3.6.2. The Contractor is authorized to make taps on his newly-installed mains which have passed both pressure and purification tests. However, the Contractor *must* consult the Superintendent of Operations, Transmission and Distribution, in the Utilities Service Center, for approval of all methods and materials used in tapping the main and running services.

Also, the Contractor *must* consult the Utilities Engineer regarding required diameter of service lines in consideration of system pressure and flow in project area. Service lines shall be 1", 1-1/2", or 2" type K copper in conformance with ASTM B88. Only flared fittings will be permitted.

The Contractor shall install service lines in the following manner:

For 1" service lines, a threaded tap shall be made on the main at a 45 degree to 90 degree angle from vertical, and a single O-ring, full-port, Teflon-coated, brass corporation stop installed; saddle taps will *not* be permitted for 1" services.

For service lines 1-1/2" or 2" in diameter, the tap shall be made by installing an approved non-corrosive saddle with stainless steel mounting bolts and a corporation stop as stated above.

A type K copper service line of appropriate diameter shall be run to the property line. At this point a double O-ring, full-port, Teflon-coated, ball valve curb stop shall be installed. The curb stop shall be fitted with a female iron thread for later attachment to yoke. This opening shall be fitted with a temporary plastic plug, or covered with duct tape. Contractor shall place a two-by-four or four-by-four extending vertically from the end of the service line in the trench to a point at least two feet above finished grade to facilitate future location. This marker shall be painted blue to indicate "water".

The service line shall be bedded on 4" of fill sand, and shall receive 4" of sand cover over the pipe. The remainder of backfill shall be as required in 4.5.1.6. and following. Street cut repairs shall be in accordance with 4.5.6. and following.

4.5.3.7. INSTALLATION OF DOMESTIC METER, YOKE, AND PIT. Contractor shall deliver a plat indicating addresses and stub-out locations to the office of the Utilities Engineer prior to application for meter sets. Domestic meters, service yokes, and pits shall be purchased from City of Bloomington Utilities and shall be installed by CBU personnel. Contact New Services, Utilities Service Center, 1969 S. Henderson Street, at least 48 hours in advance to make arrangements.

Finished grade shall be established and marked at the proposed pit location, and the meter pit shall be installed and backfilled prior to installation of meter. Top of yoke shall be set minimum 18" and maximum 24" below surface grade. Where yokes are not set within this range of depth, City of Bloomington Utilities personnel may refuse to set meters until yokes are properly adjusted.

Dual service setups shall be served by 1-1/2" diameter or larger type K copper service line unless special permission is given by the Utilities Engineer.

Prices for meters, meter sets, taps, etc. will be evaluated and established periodically. For current prices contact New Services, as listed above.

4.5.4. **INSTALLATION OF STORM SEWERS.** This section describes the specific methods and general practices to be used in installation of storm sewers.

4.5.4.1. LINE AND GRADE. Bench marks shall be set in strategic locations of the project by either the Design Engineer or the Utilities Engineering Department before start of construction. The Contractor shall be responsible for furnishing additional bench marks or reestablishing obscured bench marks, and shall furnish and set all line and grade stakes. The laser method of installation shall be used to set the grade of all sewer pipe. Any other method must first be approved in writing by the Utilities Engineer. Contractor shall constantly check alignment and grade of pipe.

4.5.4.2. LAYING OF PIPE. The point of commencement for laying storm sewer pipe shall be the lowest point in the proposed storm sewer line. Pipe shall be laid with the bell end of bell and spigot pipe, or the receiving groove end of tongue and groove pipe, pointing upgrade. Each pipe shall be placed on firm, evenly raked bedding material. All pipe shall be homed as per manufacturer's instructions. Any other procedure shall require written permission of the Utilities Engineer.

4.5.4.2.1. LAYING OF PIPE IN COLD WEATHER. Contractor shall discontinue pipe installation whenever there is danger of the quality of work being impaired because of cold weather. Contractor shall be responsible for heating pipe and jointing material to prevent freezing of joints. No pipe shall be laid on frozen ground, and no pipe shall be laid when the air temperature is less than 32° F unless proper precautions, as per the manufacturer's recommendations, are followed.

4.5.4.2.2. UNSTABLE SOIL CONDITIONS: When unstable soil conditions are encountered and the trench bottom is not firm, all soft and compressible material shall be excavated and replaced with #1 or #2 crushed stone before placement of the bedding material. As an alternative, with written permission of the Utilities Engineer, an acceptable geo-fabric may be used beneath the bedding material to stabilize the trench bottom.

4.5.4.2.3. DEWATERING AND CONTROL OF SURFACE WATER. Whenever groundwater is encountered, Contractor shall make every practical effort to secure a dry trench bottom before laying pipe. Contractor shall provide, install, and operate sufficient trenches, sumps, pumps, hoses, piping, well points, etc. to depress and maintain the groundwater level below the base of the excavation. If Contractor is unable to remove the standing water in the trench, Contractor shall over-excavate the proposed grade of the sewer bedding and place not less than three (3) inches of #2 or #3 crushed stone in the over-excavated area at no additional cost to the Owner.

Contractor shall keep the site free of surface water at all times and shall install drainage ditches, dikes, pumps, and perform other work necessary to divert or remove rainfall and other accumulation of surface

water from excavations. The diversion and removal of surface and/or groundwater shall be performed in a manner which will prevent the accumulation of water within the construction area.

Under no circumstances shall surface water and/or groundwater be discharged to, disposed of or allowed to flow into an active sanitary sewer system.

4.5.4.3. BEDDING FOR STORM SEWERS. Contractor shall provide bedding material as noted below and as indicated on the plans. The cost for bedding material shall be included in the bid price for the main, and is not a separate pay item. Bedding shall conform to ASTM D 2321 and shall be #11 or #12 crushed stone.

4.5.4.3.1. BENEATH PIPE. All pipe shall be bedded on minimum 4″ of #11 or #12 crushed stone when in soil and 6″ when the pipe is laid in rock, or 1/6 pipe O.D. up to 8-inch maximum thickness, whichever is greater. The stone shall be spread and the surface graded to provide a uniform and continuous support beneath the pipe at all points between pipe joints. Bedding material shall be removed for bells so the entire length of the pipe rests evenly on the bedding.

4.5.4.3.2. BENEATH STRUCTURES. Bedding shall be minimum four inches (4″) of either #11 or #12 crushed stone in soil and six inches (6″) in rock. All over-excavation shall be filled with either #11 or #12 crushed stone or flowable backfill, as directed by the Utilities Engineer, to achieve elevations indicated on the plan drawings.

4.5.4.4. BACKFILL FOR STORM SEWERS. Contractor shall provide backfill material as noted below and as indicated on the plans. The cost for backfill material shall be included in the bid price for the main, and is not a separate pay item. Backfill materials shall be placed and compacted in uniform lifts and shall have a moisture content sufficient to assure that maximum density will be obtained with compaction.

4.5.4.4.1. BACKFILL OVER PIPES. Backfill over pipes shall be divided into two categories: Primary Backfill and Secondary Backfill.

4.5.4.4.1.1. PRIMARY BACKFILL. Primary backfill shall be #11 crushed stone. The stone shall be shovel-sliced beneath the haunches of the pipe. For rigid pipe (DIP, RCP), primary backfill shall extend to springline of pipe. For flexible pipe, primary backfill shall extend to a point 12″ above the crown of the pipe.

4.5.4.4.1.2. SECONDARY BACKFILL. Secondary backfill shall be as stated in Sections 4.5.1.6.1. through 4.5.1.6.3.

4.5.4.4.2. BACKFILL AROUND STRUCTURES. Backfill around structures shall be as stated in Sections 4.5.1.6.1. through 4.5.1.6.4.

4.5.4.5. INSTALLATION OF STORM STRUCTURES. Structures shall be placed and aligned to provide vertical sides within a tolerance not to exceed two inches (2″) up to 16 feet in depth, plus 1/8 inch per foot over 16 feet in depth. Tolerance shall be checked with a plumb line. The completed structure shall be rigid, true to dimensions, and watertight.

4.5.4.5.1. INSTALLATION OF CAST-IN-PLACE STORM STRUCTURES. Cast-in-place storm structures shall be constructed at the locations and elevations shown on the plan drawings, and in accordance with the shop drawings, as noted in Section 4.4.5.5.1.1.

4.5.4.5.2. INSTALLATION OF PRECAST STORM SEWER MANHOLES. Precast storm sewer manholes shall be installed in accordance with Sections 4.5.2.1.7.1. through 4.5.2.1.7.4.

4.5.4.5.3. INSTALLATION OF PRECAST CONCRETE INLETS AND CATCH BASINS. Precast concrete inlets and catch basins shall be constructed at the locations and elevations shown on the plan drawings, and in accordance with Section 4.4.5.5.1.3.

4.5.4.6. SEPARATION BETWEEN UTILITIES. Horizontal and vertical separation between utilities shall be as stated in Sections 4.5.1.7. through 4.5.1.9.

4.5.4.7. ABANDONING OF SEWERS. Storm sewers which are to be abandoned shall be filled with a thin concrete mix or flowable backfill and closed either by means of a cap or plug of the same material as the pipe, or bulkheaded with a six inch (6″) thick masonry brick and non-shrink waterproof mortar wall.

Unless otherwise specified, all abandoned manholes, catch basins, and inlets shall be removed to a depth of three feet (3′) below the proposed or established grade or existing street grade, whichever is lower, and filled with granular material.

4.5.4.8. DEFLECTION TESTING. All storm sewer mains constructed of flexible pipe (PVC, HDPE, and SRP) and having manholes at each end of the pipe run, shall be deflection tested. Deflection testing shall not be required for pipe runs having an inlet or catch basin on one end.

Pipe sizes 36-inch and smaller diameter shall be mandrelled with a rigid device. For any vertical or horizontal deflection test, the pipe failure shall be defined as a five percent (5%) or greater deflection of the internal pipe diameter when testing with a rigid ball or mandrel of no less than 95% of the base inside diameter of the pipe being tested. The Contractor shall be required to perform a deflection test of all flexible pipe after the final backfill has been in place for at least thirty (30) days. The following pipe types are considered *non-flexible* and do *not* require deflection testing: vitrified clay pipe, ductile or cast iron pipe, concrete pipe, asbestos-cement pipe. Test methods and equipment shall be subject to the Engineer's approval. The test must be conducted in the presence of the Engineer or his representative, and the test results must be reviewed and certified by the Engineer or his representative prior to final acceptance of the sewer. The test is a go/no-go procedure in which the mandrel must be hand-pulled without any type of mechanical assistance. Any pipe which is found to have failed by deflection within the warranty period shall be replaced by the Contractor at no additional cost to the Owner.

Pipe sizes larger than 36-inch shall be deflection tested based on a method agreeable to both the Utilities Engineer and the Contractor.

4.5.5. **CONCRETE MIXING AND PLACING.** Mixing and placing of concrete shall conform to the latest revision of ACI 614. Ready-mixed concrete shall conform to the latest revision of ASTM C94, and shall be as specified in the Special Conditions.

4.5.5.1. COLD WEATHER CONCRETE: Whenever the atmospheric temperature is 35° F or below, or whenever the atmospheric temperature may fall below 35° F within the curing period, concrete may not be placed without the written permission of the Utilities Engineer. Contractor must have the approval of the Utilities Engineer for proposed procedures to maintain temperature of freshly-poured concrete at a minimum temperature of 50° F while maintaining adequate moisture in the air throughout the curing period. Cold weather concrete shall be placed at the risk of the Contractor and shall be removed and replaced at his expense if it becomes frozen or otherwise damaged due to low temperature.

4.5.6. **STREET CUT REPAIRS.**

4.5.6.1. GENERAL. This section covers street cut repair procedures, including saw-cuts, preparation of the trench for paving, type of material to be used for asphalt or concrete street repair, and the specifications for City and County street cut repairs. Contractor shall be responsible for obtaining a street cut permit from the proper jurisdictional agency.

4.5.6.1.1. CUTTING STREET OPENING. The openings in both asphalt and concrete pavement shall be saw-cut with straight, neat, vertical edges and square corners. The paving contractor shall saw-cut the existing pavement a minimum of eight inches (8") from either edge of trench and remove the existing pavement to expose a ledge of undisturbed soil on all sides of the trench at the appropriate depth for paving.

No opening shall have a dimension of less than 18 inches unless authorized by the Engineer or his representative.

The work methods employed in repairing the street cut shall not cause damage to adjacent pavement or property.

4.5.6.1.2. PREPARING THE TRENCH FOR PAVING. Existing backfill in the trench must be removed to the appropriate depth for paving and must be disposed of by the Contractor at his expense.

The remaining backfill shall be compacted by mechanical or hand tamping before paving.

4.5.6.2. PAVING. The Contractor shall be aware that several different specifications exist depending on the agency having jurisdiction over the street cut repair. It is the Contractor's responsibility to determine the agency having jurisdiction in the project area. This section lists these various specifications.

4.5.6.2.1. CITY OF BLOOMINGTON REQUIREMENTS. The Bloomington Municipal Code requires that repair of all primary and secondary arterial streets shall be completed within 48 hours after the subgrade work is finished. Street cut repair on all other streets shall be repaired within five days after the completion of all subgrade work.

All street cut repairs shall be guaranteed by the Contractor for a period of two (2) years from the date of final inspection and acceptance of the project.

4.5.6.2.1.1. ASPHALT STREET REPAIR. All bituminous street cut repairs shall consist of a minimum of nine inches of Class A concrete with a scarified surface and a minimum of two inches of hot bituminous surface coat, sealed along all cut edges with bituminous sealer, and compacted by a roller.

4.5.6.2.1.2. CONCRETE STREET REPAIR. All concrete street cut repairs shall consist of a minimum of ten inches of Class A concrete with a broom-finished surface. Contractor shall consult City Engineer to determine if doweling will be required.

4.5.6.2.1.3. TEMPORARY STREET REPAIR. All street cuts on primary or secondary arterial streets within the City limits shall receive at least three inches of hot mix asphalt surface within 24 hours after the cut is made. This surface shall be maintained to the satisfaction of the City Engineer until all subgrade work is completed and a permanent street repair can be made.

4.5.6.2.1.4. TEMPORARY WINTER PATCHES. Only temporary winter patches are to be used during those months of late fall and winter when concrete cannot be poured and hot bituminous asphalt mix is not available. All preliminary excavation shall be done as indicated in 4.5.6.1.2. Four inches of bituminous asphalt cold mix shall be placed and compacted in the trench in two inch lifts. Contractor shall check and maintain this temporary patch on a regular basis. All temporary patches are to be replaced with concrete and permanent asphalt by June 1st of any given year.

4.5.6.2.2. MONROE COUNTY REQUIREMENTS. The following specifications govern the street repairs within the jurisdiction of the Monroe County Highway Department.

4.5.6.2.2.1. ASPHALT SHOULDER REPAIR. Asphalt shoulder repair shall consist of a minimum of four inches of hot bituminous base, compacted with a roller, and a minimum of two inches of hot bituminous surface coat, compacted by a roller.

4.5.6.2.2.2. ASPHALT PAVEMENT REPAIR. Asphalt pavement repair shall consist of a minimum of seven inches of Class A concrete with a scarified surface and a minimum of two inches of hot bituminous surface, compacted by a roller.

4.5.7. **MISCELLANEOUS RESTORATION AND CLEAN-UP.** After completion of the Work, the Contractor shall restore all fences, shrubs, lawns, culverts, walks, etc., disturbed by his operations. All excess materials, construction debris, trash, etc., resulting from the Work shall be removed from the site and disposed of by the Contractor.

Any existing sewers, culverts, field tiles, or other conduits encountered in the trenching operation shall be left intact. If cut or removed during construction, they shall be replaced to the satisfaction of the Owner and Engineer without extra payment.

After backfilling trenches in areas outside pavement and shoulders, the excess excavated material shall be windrowed along the top of trenches until sufficient settlement has occurred. After sufficient settlement, trenches shall be graded to match surrounding topography and all excess materials disposed of by the Contractor. All areas shall be restored to original or better condition. No extra payment will be made for replacement of shrubs, fences, mailboxes, crushed stone drives, sidewalks, or curbs, or any other items not provided for as a pay item in the proposal.

4.5.8. **TESTING OF SEWER AND WATER MAINS.**

4.5.8.1. TESTING OF SEWER MAINS. Each section of sewer shall meet the requirements of the following tests. All defects exposed by these tests and by inspection shall be repaired by the Contractor to the satisfaction of the Engineer at no cost to the Owner. The Contractor shall be required to provide all materials, equipment, and labor required in the performance of these tests including, but not limited to, water, pumps, cleaning of pipes, etc.

4.5.8.1.1. TESTING OF GRAVITY SEWERS. New gravity sewers shall be required to pass either an air pressure test, or an exfiltration test. The air pressure test shall be the standard, and the exfiltration test may only be conducted with written approval of the Utilities Engineer. All new manholes must pass a vacuum test.

Methods used during all tests shall be subject to the approval of the Engineer. The completed sewer shall be tested for leakage, and inspected for damaged materials and improper installation including straightness of line *before any services are connected to the sewer*.

No additional payment will be made for the performance of these tests.

4.5.8.1.1.1. EXFILTRATION TEST. An exfiltration test shall be performed by closing all other openings in the upper manhole and plugging the line where it enters the lower manhole of the section to be tested, filling the line and the upper manhole to the top with water and measuring the water required to keep the manhole full.

The total exfiltration shall not exceed 100 gallons per inch of nominal diameter per mile of pipe per day for each section tested. For determining maximum allowable leakage, manholes shall be considered as sections of pipe of equal inside diameter. The exfiltration tests shall be maintained on each section for at least one hour, and as much longer as the Engineer considers necessary to locate all leaks. If the leakage in any section exceeds the allowable maximum, it shall be retested after the leaks are repaired.

4.5.8.1.1.2. AIR PRESSURE TEST: The Contractor may choose to conduct a test on PVC pipe using low-pressure air in place of exfiltration testing. Air pressure test shall conform to ASTM F-1417-92. The section of sewer to be tested shall be isolated with pneumatic plugs that have a sealing length greater than the diameter of the pipe and are capable of resisting test pressure without external bracing or blocking. The sewer shall be pressurized to 4 psi gauge greater than the average back pressure of any ground water over the pipe. This pressure shall be maintained until the temperature of the pipe and the air have equalized, but not less than two minutes. After the temperature has stabilized, the air supply shall be disconnected and the pressure allowed to drop. The time in minutes required for the pressure to drop from 3.5 psi to 2.5 psi shall not be less than as calculated using the following chart:

MINIMUM SPECIFIED TIME REQUIRED FOR A 1.0 PSIG PRESSURE DROP AND MULTIPLIER FOR CALCULATING TIME BY LENGTH OF PIPE (L)

Pipe Diameter (inches)	Minimum Time (min:sec)	Maximum Length for Minimum Time (feet)	Time for Longer Length (seconds)
4	3:46	597	0.380 L
6	5:40	398	0.854 L
8	7:34	298	1.520 L
10	9:26	239	2.374 L
12	11:20	199	3.418 L
15	14:10	159	5.342 L
18	17:00	133	7.692 L
21	19:50	114	10.470 L
24	22:40	99	13.674 L
27	25:30	88	17.306 L
30	28:20	80	21.366 L
33	31:10	72	25.852 L
36	34:00	66	30.768 L

Column 1 is the diameter of the pipe to be tested. Column 2 is the minimum time permitted for any length of pipe up to and including the length listed in column 3. If the length of the pipe to be tested is greater than the length listed in column 3, multiply the length of the pipe to be tested by the number in column 4. The result is the test time in seconds.

4.5.8.1.1.3. VACUUM TEST. All sanitary manholes must be vacuum tested. The vacuum tester shall be as manufactured by P. A. Glazier, Inc. or approved equivalent.

4.5.8.1.1.3.1. VACUUM TEST FOR MANHOLES. Manholes shall be air tested in accordance with ASTM C1244-93, Standard Test Method for Concrete Sewer Manholes by the Negative Air Pressure (Vacuum) Test. Testing shall be done after complete assembly of manhole, including the manhole frame and, when pertinent, any outside drop connections. Testing prior to backfilling is highly recommended to facilitate corrective measures in case of test failure. Contractor shall plug all pipe openings, taking care to securely brace both the plugs and the pipes. The test head shall be placed at the top of the manhole in accordance with the manufacturer's recommendations. A vacuum of 10 inches of mercury shall be drawn on the manhole, the valve on the vacuum line of the test head closed, and the vacuum pump shut off. The time shall be measured for the vacuum to drop to 9 inches of mercury. The manhole shall pass if the time for the vacuum reading to drop from 10 inches of mercury to 9 inches of mercury meets or exceeds

the values indicated in the following table, ***or one and one-half (1.5) minutes, whichever is greater. If the inspector finds a noticible leak, he may immediately declare the test to have failed.***

Minimum Test Times for Various Manhole Diameters in Seconds

	Diameter (in.)								
	30	33	36	42	48	54	60	66	72
Depth (ft.)	Time (sec.)								
8	11	12	14	17	20	23	26	29	33
10	14	15	18	21	25	29	33	36	41
12	17	18	21	25	30	35	39	43	49
14	20	21	25	30	35	41	46	51	57
16	22	24	29	34	40	46	52	58	67
18	25	27	32	38	45	52	59	65	73
20	28	30	35	42	50	53	65	72	81
22	31	33	39	46	55	64	72	79	89
24	33	36	42	51	59	64	78	87	97
26	36	39	46	55	64	75	85	94	105
28	39	42	49	59	69	81	91	101	113
30	42	45	53	63	74	87	98	108	121

If the manhole fails the initial test, necessary repairs shall be made by an approved method. The manhole shall then be retested until a satisfactory test is obtained.

4.5.8.1.1.3.2. VACUUM TEST FOR SEWER PIPES. Vacuum testing of gravity sewer pipe is no longer an acceptable alternative in the CBU jurisdictional area.

4.5.8.1.1.4. DEFLECTION TEST. For any vertical or horizontal deflection test, the pipe failure shall be defined as a five percent (5%) or greater deflection of the internal pipe diameter when testing with a rigid ball or mandrel of no less than 95% of the base inside diameter of the pipe being tested. The Contractor shall be required to perform a deflection test of all flexible pipe after the final backfill has been in place for at least thirty (30) days. The following pipe types are considered *non-flexible* and do *not* require deflection testing: vitrified clay pipe, ductile or cast iron pipe, concrete pipe, asbestos-cement pipe. Test methods and equipment shall be subject to the Engineer's approval. The test must be conducted in the presence of the Engineer or his representative, and the test results must be reviewed and certified by the Engineer or his representative prior to final acceptance of the sewer. The test is a go/no-go procedure in which the mandrel must be hand-pulled without any type of mechanical assistance. Any pipe which is found to have failed by deflection within the warranty period shall be replaced by the Contractor at no additional cost to the Owner.

4.5.8.1.1.5. SMOKE TEST. The Owner shall reserve the right to supplement sewer tests with a pressure smoke test when it is considered necessary or desirable by the Owner or Engineer.

4.5.8.1.1.6. TELEVISION INSPECTION. Before final acceptance, all new gravity sewers shall be televised by the City of Bloomington Utilities Department.

The first televising run shall be conducted after all other testing and jet-cleaning is complete. Contractor must give at least 72 hours prior notice (not including weekends or holidays) to the Utilities Department when scheduling televising.

A second televising run shall be conducted 11 months after the date of final acceptance. Both televising runs shall determine wye locations, defective joints, and deformed or cracked pipe or fittings. Both runs will be done by City Utilities without charge to the Contractor. Any additional runs that are considered necessary to reinspect defective pipes, wyes, joints, etc., shall be charged to the Contractor at a rate to be determined by the City of Bloomington Utilities Department.

4.5.8.1.2. TESTING OF FORCE MAINS. All force mains shall be pressure and leak tested in accordance with one (1) of the following methods. If an AWWA standard is not available for the particular installation, the installation and test procedure recommended by the manufacturer shall be followed. Contractor shall supply pump with suitable pressure gauge and acceptable means of connecting to main. Utilities Inspector will monitor all tests.

4.5.8.1.2.1. AWWA STANDARD C600, LATEST UPDATE: Installation of Ductile Iron Water Mains and Their Appurtenances (see 4.5.8.2.1.1.).

4.5.8.1.2.2. AWWA Standard C605, LATEST UPDATE: Underground Installation of Polyvinyl Chloride (PVC) Pressure Pipe and Fittings for Water.

With a Utilities Inspector present, a combined hydrostatic pressure and leakage test shall be performed. The line shall be properly filled with water, flushed, and purged of air by means of an air valve or blow-off. The specified test pressure shall be applied by means of an approved pumping assembly. Test pressure shall be 150% of the working pressure (pump shut-off head) at the point of test, but not less than 125% of the normal working pressure at the highest elevation of the line. Duration of the test shall be two (2) hours. Leakage shall be defined as the quantity of water that must be supplied into the pipe section being tested to maintain a pressure within 5 psi of the specified leakage test pressure after the pipe has been filled with water and the air has been expelled.

The following table indicates allowable leakage per 50 joints of PVC pipe in gallons per hour:

Average Test Pressure, psi	**Nominal Pipe diameter, inches**										
	4	**6**	**8**	**10**	**12**	**14**	**16**	**18**	**20**	**24**	**30**
300	0.47	0.70	0.94	1.17	1.40	1.64	1.87	2.11	2.34	2.81	3.51
275	0.45	0.67	0.90	1.12	1.38	1.57	1.79	2.02	2.24	2.69	3.36
250	0.43	0.64	0.85	1.07	1.28	1.50	1.71	1.92	2.14	2.56	3.21
225	0.41	0.61	0.81	1.01	1.22	1.42	1.62	1.82	2.03	2.43	3.04
200	0.38	0.57	0.76	0.96	1.15	1.34	1.53	1.72	1.91	2.29	2.87
175	0.36	0.54	0.72	0.89	1.07	1.25	1.43	1.61	1.79	2.15	2.68
150	0.33	0.50	0.66	0.83	0.99	1.16	1.32	1.49	1.66	1.99	2.48
125	0.30	0.45	0.60	0.76	0.91	1.06	1.21	1.36	1.51	1.81	2.27
100	0.27	0.41	0.54	0.68	0.81	0.95	1.08	1.22	1.35	1.62	2.03
75	0.23	0.35	0.47	0.59	0.70	0.82	0.94	1.05	1.17	1.40	1.76
50	0.19	0.29	0.38	0.48	0.57	0.67	0.76	0.86	0.96	1.15	1.43

4.5.8.1.3. TESTING OF WET WELLS. Contractor shall perform leakage tests on wet wells under supervision of the Utilities Inspector. This shall be an exfiltration test performed in the following manner:

The test shall be made prior to placing any backfill material. If the water table has been allowed to rise above the bottom of the wet well, it shall be lowered for the duration of the test. Any points of visible inflow/infiltration shall be plugged by use of OCTOPLUG (IPA Systems, Inc.) (www.ipasystems.com). All pipes and other openings into the wet well shall be suitably plugged by means of pneumatic plugs that

have a sealing length greater than the diameter of the pipe and are capable of resisting test pressure without external bracing or blocking.

The wet well shall then be filled to the top with water. If the excavation has not been backfilled and there is no visible or measurable indication of leakage after one hour, the wet well shall be considered to be satisfactorily water-tight.

If the test as described above is not satisfactory, or if the wet well excavation has been backfilled, the following test shall be performed. A period of time up to 24 hours shall be permitted to allow for absorption. At The end of this period, the wet well shall be refilled to the top and the measuring period of at least 8 hours begun. At the end of this test period, the amount of loss can be calculated by measuring and calculating the volume lost, or the wet well can be filled to the top while measuring the required volume of water to do so. This amount shall be extrapolated to a 24-hour rate.

Calculation of allowable loss in 24 hours for wet wells shall be similar to that of pipe and manholes, which shall not exceed 100 gallons per inch of nominal diameter per mile of pipe per day.

To calculate allowable loss in gallons for circular wet wells: Multiply wet well diameter in inches times 100 gallons times depth in fractional miles (depth in feet divided by 5280).

To calculate allowable loss in gallons for rectangular wet wells: Multiply wet well perimeter in inches (2 × L plus 2 × W) times 100 gallons / π times depth in fractional miles (depth in feet divided by 5280).

If the wet well does not meet allowable leakage rate, repairs by approved methods may be made as directed by the Utilities Engineer to bring the leakage within the allowable rate. No adjustment to the leakage allowance will be made for unknown causes, such as leaking plugs, absorption, evaporation, etc.; it will be assumed that all loss of water during the test is a result of leaks through the joints or through the walls. Furthermore, the Contractor shall take any steps necessary to assure the Utilities Inspector that the water table remains below the bottom of the wet well throughout the test.

4.5.8.2. TESTING OF WATER MAINS.

4.5.8.2.1. PRESSURE AND LEAKAGE TEST. The Contractor shall perform a combination pressure and leakage test on all new mains after they have been filled with water as specified in 4.5.3.5.1. This test shall not be performed until the entire main has been backfilled.

4.5.8.2.1.1. PROCEDURE. The test procedure shall be as herein specified and in accordance with the latest revision of AWWA C600.

After the new main has been filled with water and all air evacuated, each valved section, as directed by the Engineer, shall be subjected to water pressure normal to the area and inspected for evidence of leakage. The main shall then be subjected to a combination hydrostatic and leakage test. The test pressure shall be developed by a pump with suitable pressure gauge furnished and connected to the main by the Contractor. Test pressure shall not be less than 125% of the standard working pressure at the highest elevation on the main, and at least 150% of the standard working pressure at the point of testing. Duration of the test shall be two (2) hours. Leakage shall be defined as the quantity of water that must be supplied into the pipe section being tested to maintain a pressure within 5 psi of the specified leakage test pressure after the pipe has been filled with water and the air has been expelled.

Leakage shall not exceed a rate of twelve gallons per inch of pipe diameter, per mile of pipe, per twenty-four hours at a pressure of 200 psi.

The following table indicates allowable leakage per 1,000 feet of DIP in gallons per hour:

Average Test Pressure, psi	**Nominal Pipe diameter, inches**										
	4	**6**	**8**	**10**	**12**	**14**	**16**	**18**	**20**	**24**	**30**
300	0.52	0.78	1.04	1.30	1.56	1.82	2.08	2.34	2.60	3.12	3.90
275	0.50	0.75	1.00	1.24	1.49	1.74	1.99	2.24	2.49	2.99	3.73
250	0.47	0.71	0.95	1.19	1.42	1.66	1.90	2.14	2.37	2.85	3.56
225	0.45	0.68	0.90	1.13	1.35	1.58	1.80	2.03	2.25	2.70	3.38
200	0.43	0.64	0.85	1.06	1.28	1.48	1.70	1.91	2.12	2.55	3.19
175	0.40	0.59	0.80	0.99	1.19	1.39	1.59	1.79	1.98	2.38	2.98
150	0.37	0.55	0.74	0.92	1.10	1.29	1.47	1.66	1.84	2.21	2.76
125	0.34	0.50	0.67	0.84	1.01	1.18	1.34	1.51	1.68	2.01	2.52
100	0.30	0.45	0.60	0.75	0.90	1.05	1.20	1.35	1.50	1.80	2.25

If the leakage from a test section is greater than permitted under this specification, the Contractor shall locate and repair the defective joints, pipes, or appurtenances. The pressure test shall then be repeated until leakage does not exceed the permissible amount.

4.5.8.2.2. PURIFICATION TEST. Purification testing shall be in accordance with the latest edition of AWWA C651. After a new main has passed the pressure and leakage test, and after it has been flushed as detailed in 4.5.3.5.1., but before the new main is connected to the distribution system, two consecutive sets of acceptable samples, taken at least 24 hours apart, shall be collected from the new main by the Utilities Inspector. At least one set of samples shall be collected from every 1,200 feet (366 m) of the new water main, plus one set from the end of the line and at least one set from each branch.

If initial disinfection fails to produce satisfactory bacteriological samples, the main may be reflushed in accordance with 4.5.3.5.1. and new samples taken. If new samples show the presence of coliform organisms, the main shall be rechlorinated.

4.5.8.2.2.1. RECHLORINATION PROCEDURES. Water mains shall be rechlorinated in accordance with the latest edition of AWWA C651 utilizing procedures approved in advance by the Utilities Engineer. 16 hours after flushing is completed, new samples will be taken for testing in accordance with 4.5.8.2.2.

INDEX

—A—

abandonment of gravity sewers, 44
R.C.P., 15
adjusting rings, precast concrete, 28
air pressure test, 73
air release valves, 22
air release valves, water, 22
air/vacuum valve, 18, 19, 20, 44, 45, 46
  air release valve, 20
  combination valve, 20
Air/vacuum valves, 46
American AVK , 22, 23
anchor coupling, 65
Anchors, 39, *See pipe anchors*
anchors for pipe, 37
anchors for pipes, slopes greater than 20%, 61
Application for Service, 63
Article 327 IAC, 8
asphalt, 32, 70, 71

—B—

backfill, 10, 12, 32, 36, 38, 39, 40, 41, 62, 63, 66, 68, 70, 71, 74, 75
  around structures, 38
  general, 38
  in unimproved areas, 38
  under highway shoulders, 38
R.C.P., 41
backfill beneath pavements, surfacing, and driveways, 38
backfill, settlement of, 36
bacterial testing, 67
ball valve, 22, 67
barrels, 17, 42
barrels, manhole, 17
barricades, 10, 11
barricades, signs, and lights, 10
base, 16, 17, 42, 43, 47, 65, 72
bedding, 36, 37, 40, 41, 62, 65
  beneath pipe, 37
  beneath structures, 37
  general, 37
R.C.P., 41
bedding and backfill, installation
  DIP, 41
  PE pipe, 40
  VCP, 41
bedding in rock, 37
bedding in soil, 37
bell and spigot joints, 19, 21
bentonite, use of, 37
BILTRITE. *See* cloth insert gaskets
bituminous sealer, 71
bituminous surface, 71, 72
blast monitoring, 35
Blasting, 33
blasting consultant, 33
blasting plan, 34
blasting, postblast survey, 36
blasting, preblast survey, 35
Bolts and nuts for DIP mechanical joints, 21
boot, 16, 17, 42
boots, manhole, 17
boring or tunneling, 37
boring, abandonment, 37
boring, obstruction, 37
boring, rock payment for, 37
boulders, 32
box culverts, precast, 27
box inlets, precast concrete, 28
bracing, 36
butterfly valves, 22, 65
butyl rubber material, installation of castings, 18, 43
bypass detector meter, 63

—C—

C900, 13, 18
C900 (DR-14), 21, 62
C900 (DR-18), 18, 45
calcium aluminate lining, 14, 19
cap, 16, 41
caps or plugs, 41
carrier pipe, 37
Cascade Style CSST transition clamp coupling, 15
casing, 37
casing pipe, jacking of, 37
casing pipe, lubricant for jacking, 37
casing spacers, 37
casting required for clean-out, 42
castings, adjustment of elevation, 43
castings, manhole, 18, 43
CBU Standard Detail #2, 16, 42
cell classification PVC, 18" - 27", 13
cell classification PVC, 4" - 15", 13
air pressure test, 73
check valve, additional c.v. required, 63
check valve, fire lines, 63
check valves, 20
check valves (sewer laterals), 42
chlorination, 67
chlorine, 67
chlorine residual, 67
CIPP, 47
CIPP cool-down, 49
CIPP installation, 49
CIPP temperature monitoring, 49
CIPP test samples, 50
CIPP visual inspection, 50
CIPP, chemical resistance requirements, 48
CIPP, curing, 49
CIPP, hydraulic capacity, 48
CIPP, minimum structural standards, 48
CIPP, pre-lining inspections, 48

CIPP, reinstatement of services, 50
CIPP, water for process, 50
class A concrete, 12
class B concrete, 12
cleaning of sewers, 44
clean-out, 42
clean-out casting required, 42
clean-up and restoration, 72
clean-up operations, 9
clearing, 11, 31, 42
closed profile pipe, 13
cloth insert gaskets, 65
cold mix, 71
cold weather concrete, 70
cold weather installation of manholes, 43
combination valve, 44
combination valves, 20, 46
compaction of backfill, 38
completion dates, 9
Compression or solder joints for water services, 22
concrete, 9, 12, 16, 17, 22, 32, 37, 42, 43, 44, 46, 61, 65, 66, 70, 71, 72, 74
  class A, 12
  class B, 12
  forms, 12
  general, 12
  reinforcing steel, 12
concrete, installation
  cold weather concrete, 70
  general, 70
cones, 17, 43
cones, manhole, 17
construction schedule, 9
CONTECH A-2000, 13
Pipe Bursting, 52
copper wire, 18, 19, 21, 45
copper, type K, 22
corp stop, 22
corporation stop, 67
corporation stops, 22
couplings, 15
cover, 11, 14, 17, 18, 32, 37, 43, 61, 68
covers, manhole, 18
crossing of utilities, 38
curb stop, 22, 67
Cured In Place Pipe (CIPP), 47

—D—

D.I.P., 21
daily clean-up, 10
dead-end water mains, 61
deflection of water mains, 61
deflection test, 74
deflection, allowable, 70, 74
detector check assembly, 63
detention ponds and dams, 27
dewatering, 31, 36
DFW non-shear coupling, 15
dikes, 11
DIP, 14, 19, 21, 41, 45, 61, 62
  bedding and backfill, 41
  field-cutting DIP, 41
  installation of DIP, 41
DIP fittings, 21
DIP joints, 21
DIP, protective linings for sewer application, 14
disinfection, 67, 77
disinfection period, 67
disposal of excavated materials, 36
diversion of surface water, 36
domestic meter, 63
domestic service, 63
doweling, 71
drainage of stormwater, 11
drainage provisions (temporary), 11
driveways, 10
DRYCON, 18, 43, 47
dual service setups, water, 68
ductile iron pipe, 19, 21
Dumpster Pads
  drains for dumpster pads, 42
Dura-Seal gasket, 17, 42
dust control, 11

—E—

earth excavation, general, 32
easements, 8
East Jordan, 18, 22, 65
embedment material, 37
erosion control, 11
erosion control plan, 11
ETI ULTRA BLUE, 18, 45
ETI ULTRA RIB, 13
excavated material, 11
excavated materials
  classification, 32
  disposal of, 36
  earth excavation, 32
  rock excavation, 32
  rock excavation for pipe, 32
  rock excavation for structures, 32
  rock excavation pay limits, 36
  stockpiling of, 36
excavation, general, 32
excavation, unauthorized, 36
exfiltration, 72, 75
exfiltration test, 72
exfiltration, allowable amount, 72
existing services, non-interruption of, 61

—F—

fall through manholes, allowable, 42
FARBERTITE, 17, 43, 47
FastTap, 21
Fernco Waterstop, 37
fill sand, 63, 68
filling and flushing of water mains, 10
fire hydrant, 65
fire hydrants, 23

installation, 65
fire line, 63
fire lines
bypass detector meter, 63
check valve, 63
installation, 63
sterilization and pressure testing, 63
taps on fire lines, 63
fire lines remain private, 63
fire lines to be DIP, 63
fire lines, check valve, 63
fire lines, pit door, 63
FirstLiner USA, Inc., 47
fittings, 12, 13, 14, 18, 19, 20, 21, 22, 38, 40, 44, 46, 61, 63, 67, 75
fittings and appurtenances, installation
air release valves, 66
fire hydrants, 65
flush hydrants, 65
line valves, 65
tapping valves, 65
valve boxes, 66
valves, general, 65
fittings, water, 22
flagmen, 10
flanged joints, 19, 21
flattops, 17, 43
flattops, manhole, 17
flexible pipe, 70, 74
flotation, 36
flotation of pipe, 36
flush hydrants, 23
installation, 65
flushing, 10, 67, 77
force main, 18, 44, 46
force main valves, 18
force mains, 44
air/vacuum valves, 46
design and installation, 44
DIP, 45
fittings, 46
high point, 44
joint restraint, 44
locator wire for PVC pipe, 45
PVC pipe, 45
force mains - PVC pipe, 45
force mains, testing of, 75
forms, 12
frame, 17, 43, 73
frames, manhole, 18
frozen materials, 32

—G—

gasket, 13, 14, 16, 17, 37, 39, 41, 42
gaskets, 18, 19, 21, 38, 61, 65
R.C.P., 15
gaskets, manhole, 17
gate valve, 61, 65
gate valves, 20, 22, 65
geo-fabric, 32
gravity sewers
C900 PVC pipe, 13
DIP, 14
home marks, PVC pipe, 13
materials, 12
PE pipe, 13
PE pipe joints, 14
pipe materials, 12
prevention of inflow during construction, 39
PVC fittings, 13
PVC pipe, 12
PVC pipe joints, 13
PVC profile pipe, 13
VCP, 14
VCP joints, 14
gravity sewers, installation
DIP, 41
DIP, field-cutting, 41
general, 39
PE pipe, 40
PVC pipe, 40
PVC profile pipe, 40
service connections, 41
VCP, 41
gravity sewers, minimum pipe slopes, 39
ground line mark on hydrant, 65
grout, 17, 37, 43, 44, 46
grubbing, 31

—H—

hand digging zone, 9
HARCO
fittings, 13
hazardous substances, 31
HDPE bedding, 45
HDPE fittings, 19
HDPE mechanical joint adapters, 19, 45
HDPE pipe, 24
butt fusion, 19, 45
heat fusion, 19, 45
storm sewers, 24
HDPE pipe joining, 19, 45
HDPE primary backfill, 45
HDPE secondary backfill, 45
HDPE, installation, 45
hydrant arm, 65
hydrants, disinfection of, 66
Hydraulic calculations, 23
hypochlorite tablets, 66

—I—

IDF Curves, 23
inlets and catch basins, precast, 27
Insituform of North America, Inc., 47
inspector, 31, 63
R.C.P., 41
installation of bedding and backfill
DIP, 62
PE pipe, 40

VCP, 41
installation of storm sewers, 68
installation of valve markers, 66
installation of water mains, 61
invert height above manhole base, 43
inverted siphons, 47
IOSHA, 31, 36
IPA Systems, 17, 43, 46
IPANEX, 17, 43, 46

—J—

jacking of casing pipe, 37
J-M PERMA-LOC, 13
joint restraints, 44, 64
R.C.P., 15

—K—

Kennedy Guardian, 23
kickers, 64
KOR-N-SEAL, 17, 42

—L—

LAMSON VYLON, 13
laser, 39
lateral marker, 41
laterals, 41
laterals in a common trench, 41
laying of pipe, 37
lids, 18
Lids, manhole, 18
lift holes, 17, 43, 46, 47
R.C.P., 14
lights, flashing, 10
limits of work, 8
line valve, 65
lining, DIP for water, 21
locator wire, 18, 19, 45, 62
locator wire and signs, 21
low-pressure air test, 73
PVC sewer pipe, 73
lubricant, 37, 39, 61, 62

—M—

maintenance of traffic, 10
manhole, 16, 17, 18, 22, 42, 43, 44, 65, 72, 73
manhole frames and covers, 18
manhole gasket for pipe, 42
manhole size determined by pipe size, angles, 16
manholes, 16, 42
adjustment of casting elevation, 43
assembly of base, barrel, and cone, 42
barrels, 17
bases, 16
boots and gaskets, 42
castings, 18
cold weather installation, 43
cones and flattops, 17
gaskets and boots, 17
general, 16
installation, 42
installation of castings, 43
installation of steps, 43
installation of table and trough, 43
joints between manhole sections, 42
manhole bases, 16
maximum elevation difference between inlet pipes, 16
maximum fall through manholes, 16
minimum diameters, 16
outside drop, 16
sealants, 17, 43
steps, 18
manholes with multiple inlets, 42
manholes, outside drop, 42
marker, 23, 41, 66, 67
marker for sewer stub-out, 41
marker, water service stub-out, 67
mechanical joints, 19, 21, 62
mechanical restraints, 44, 64
mega-lug gland, 65
meter, 22, 63, 68
meter pit, 68
meter pit, yoke depth, 68
Mission 56 Series ARC coupling, 15
mortar, 14, 16, 17, 37, 43, 44
Mueller Centurion, 23

—N—

no-cut streets, 9
non-flexible pipe, 70, 74
non-shear pipe couplings, 15
notification of discrepancies on plans, 9
notification of start of construction, 9
notification procedures, 9
notify all utilities, 9
notify Holey Moley, 9
notify I.U.P.P.S., 9

—O—

obstruction in boring, 37
OCTOCRETE, 17, 43, 46
open-cut road crossings, 10
order of precedence, 8
Order of Precedence, 8
outside drop, 16, 42, *See* manholes
outside drop manholes, 42

—P—

paving, 66, 70, 71
PC 350, 19
PCCP, 21, 63
PE, 13
PE pipe, 40
PE pipe, push plate for seating, 40
permits, 9
pipe anchors, 37
Pipe Bursting
burst lengths, 59

bypassing the flow, 57
CCTV inspection, 60
host pipe depth, 58
host pipe size, 58
launching and exit pits, 58
lubricants, 59
manhole preparation, 59
measurement and payment, 60
methods and systems, 55
quality assurance, 53
reconnection of services, 59
reference standards, 52
relaxation period, 59
replacement pipe materials, 56
restoration of manhole tables and troughs, 60
restoration of manholes, 60
restoration of pits, 60
service excavations, 58
size and wall thickness of new pipe, 58
submittals, 53
suitable host pipe materials, 57
surrounding soil types, 58
pipe couplings, 15
pipe laser, 39
pipe lubricant, 39, 62
pipe placement, 37
pipe, flotation of, 36
fire lines, 63
plug, 16, 17, 40, 41, 43, 46, 67, 73
plug valves, 20
plugs, 73, 75
plugs or caps, 41
pollution control, 12
polyethylene, 12, 37, 40
polyvinyl chloride, 12, 40, 61
ponding, 11
postblast survey, 36
poured-in-place wet wells, 46
power, use of, 10
preblast survey, 35
precast box culverts, 27
pre-cast wet well structures, 46
pre-cast wet wells, 46
preparation of the site, 31
pressure and leakage test, 67, 76, 77
pressure gauge, 76
pressure sewers, 44
air/vacuum valves, 20
check valves, 20
DIP, 19
DIP fittings, 19
DIP joints, 19
fittings for C900 pipe, 18
gate valves, 20
HDPE fittings, 19
HDPE pipe, 19
joining of HDPE pipe, 19, 45
locator wire and signs for C900 pipe, 18
locator wire and signs for HDPE pipe, 19, 45
material, 18
pipe and fittings, 18
plug valves, 20
pump station specifications, 20
PVC pipe, 18
valves, general, 20
Prestressed Concrete Cylinder Pipe, 21
prevention of inflow during construction, 40
private property, 8
project requirements, 9
protection of public and private property, 11
protection of site, 32
protection of underground facilities, 9
Protecto 401, 14, 19
pump stations, 20, 46
pumping, 31, 44
purification test, water mains, 77
push plate for seating large diameter PE pipe, 40
PVC, 12, 13, 14, 18, 21, 37, 40, 45, 62, 63
PVC open profile pipe, 13
PVC pipe, 21, 62
PVC pipe, primary backfill, 40
PVC pressure pipe, 62
PVC profile pipe, 13
PVC water mains, 2-inch, 62
PVC water mains, 4-inch, 62
PVC water pipe, 21

—R—

R.C.P., 14
R.C.P., reinforcement, 14
railroad right-of-way, 8
Rainfall Intensity-Duration-Frequency Curves, 23
ready-mixed concrete, 70
rebar, 12
rechlorination of water mains, 77
rehabilitation of sanitary sewers, 47
reinforced concrete pipe, 14, 25
reinforcing steel, 12
removal of water, 36
request field-marking of all utilities, 9
restoration and clean-up, 72
restrained joint, 64
riser rings, 17
road boxes, 65
road crossings, open cut, 10
road cut permits, 9
rock, 32, 36, 37, 40
rock excavation for pipe, 32
rock excavation pay limits, 36
rock excavation, general, 32
rock payment for boring, 37
rocks, 32
roller, 71, 72
Romac Industries sewer saddle, 13
rubble, construction, 9

—S—

saddle, 13, 46, 66, 67
saddles, 41
safety, 10, 31, 36, 44

safety program, 31
sanitary laterals, 41
sanitary sewers
abandonment, 44
cleaning, 44
scarification, 32, 36
SDR-21 (PR200), 18, 21, 45, 62
seal of lining, DIP for water, 21
sealants, manhole, 17, 43
separation between CBU mains and permanent structures, 39
separation between CBU mains and trees, 39
separation between manholes and water mains, 39
separation between utilities
horizontal separation, 38
if impossible to maintain minimum separation, 38
vertical separation, 38
service connections, 41, 67
service connections, gravity sewer, 41
service connections, water
domestic meter, yoke, and pit, 68
general, 67
service line, 22, 41, 61, 67, 68
service lines, 22
service lines, installation of, 67
service lines, sizing of, 67
service wyes, 41
settlement of backfill, 36
sewage treatment fee, 67
sewer and water mains, general installation, 31
sewer lateral connections, 41
sewer mains, fee for second TV inspection, 75
sewer mains, general installation, 39
sewer mains, smoke test, 74
sewer mains, testing, 72
sewer mains, TV inspection, 74
sewer pipes, deflection test, 70, 74
SewperCoat, 14, 19
sheeting and shoring, 36
signs, 10
site protection, 32
sleeve type repair coupling, 15
slip joints, 19, 21
slope of 20% or greater, pipe anchors, 37
slopes greater than 20%, 39
smoke test, 74
solid copper wire, 62
solvent cement joints, 13, 18, 21
spacers, precast concrete, 28
Spirolite PE pipe, 40
stabilization of pipe with anchors, 37
Standard Drawings, 8, 16, 22, 23, 61, 65, 66
State Construction Permit, 31
state highway right-of-way, 8
steps, manhole, 18, 43
stockpiling of excavated materials, 36
stone, #5, 65
storm drainage design, 23
Storm Manholes, precast, 27
Storm Sewers, abandoning, 70
Storm Sewers, Aggregate for RCP, 25
Storm Sewers, backfill, 69
Storm Sewers, bedding, 69
Storm Sewers, castings, frames, and covers, 29
Storm Sewers, connection of pipe to structure, 31
Storm Sewers, deflection testing of flexible pipe, 70
Storm Sewers, dewatering of trench, 68
Storm Sewers, DIP, 24
Storm Sewers, DIP, coatings and linings, 24
Storm Sewers, inlet and catch basin dimensions, 30
storm sewers, installation of, 68
Storm Sewers, laying of pipe in cold weather, 68
Storm Sewers, manhole dimensions, 29
Storm Sewers, materials, 23
Storm Sewers, open channels, 27
Storm Sewers, Pipe, 24
Storm Sewers, Portland Cement for RCP, 25
storm sewers, PVC pipe, 25
Storm sewers, RCP absorption limit, 26
Storm Sewers, RCP joints, 26
Storm Sewers, reinforced concrete pipe, 25
Storm Sewers, spiral rib metal pipe (SRP), 26
Storm Sewers, steel reinforcement for RCP, 25
Storm Sewers, steps in structures, 30
Storm Structures, installation, 69
Storm Structures, rejection of precast sections, 31
street cut, 70, 71
street cut permit, jurisdiction, 71
street cut repair
Monroe Co. - asphalt pavement repair, 72
Monroe Co. - Asphalt shoulder repair, 72
Monroe Co. requirements, general, 71
street cut repairs, 68
CBU - asphalt street repair, 71
CBU - concrete street repair, 71
CBU - temporary street repair, 71
CBU - temporary winter patches, 71
CBU requirements, general, 71
cutting street opening, 71
general, 70
minimum dimension, 71
paving, 71
preparing trench for paving, 71
two-year guarantee, 71
stymied pipe, 37
surface water, diversion of, 36
surfacing, temporary, 10

—T—

table, 16, 43, 44, 66
table, manhole, 43
tamping, 12, 71
tapping corporation, 46, 66
tapping of existing water mains, 67
tapping of newly-installed water mains, 67
tapping saddles, 23
tapping sleeves, 23
tapping valve, 65, 66
tapping valves, 22
tapping valves, thrust restraint, 66
tee or wye saddles, 41

tee/anchor coupling/gate valve assembly, 65
tees, 13, 44
televising, 44, 74, 75
television inspection, 74
temporary connection, sewer replacement, 40
temporary facililities, 10
temporary patch, 71
temporary surfacing, 10
Ten States Standards, 8
tensile strength PVC, 18" - 27", 13
tensile strength PVC, 4" - 15", 13
testing, 72, 75, 76
testing of sewer mains, 72
  deflection test, 74
  gravity mains, exfiltration test, 72
  gravity sewers, general, 72
  smoke test, 74
  television inspection, 74
testing of water mains
  pressure and leakage test, 76
  purification test, 77
  rechlorination procedures, 77
testing of wet wells, 75
thrust blocks, 64
thrust forces, 63
thrust restraint, 63
thrust restraint design, 44, 64
thrust restraint design, responsibility for, 64
traffic maintenance, 10
tree protection, 11
trench banks, slopes, 32
trench excavation, 32
trench maintenance, 36
trench safety, 36
trench safety system, 31, 36
trench width, minimum, 32
trough, 16, 43, 44
trough, manhole, 43
tunneling, 11, 37
type "K" copper, flared fittings only, 67
type K copper, 21, 22, 62, 67, 68

—U—

unauthorized excavation, 36
unsafe conditions, 31
unstable soil conditions, 32, 68
unsuitable construction conditions, 9
unsuitable materials, replacement of, 36
utilities, separation between
  if impossible to maintain minimum allowable, 38
  vertical, 38
Utilities, separation between
  horizontal, 38

—V—

vacuum test for manholes, 73
vacuum tester, 73
Vacuum testing of gravity sewer pipe, 74
vacuum testing of manholes, 73
Val-Matic, 22
valve, 20, 22, 66
valve box, 18, 19, 20, 21, 22, 23, 45, 46, 62, 65
valve boxes, 18, 19, 21, 45, 46, 63, 66
valve markers, 23, 66
valve vault, 18, 19, 20, 21, 22, 45, 46, 62, 66
valves, 20, 22, 42, 44, 46, 65, 66, 67
  air release valves, installation, 66
  line valves, installation, 65
  tapping valves, installation, 65
  valve boxes, installation, 66
  valve markers, installation, 66
valves, installation
  general, 65
valves, restraint of, 65
valves, water, 22
VCP, 14, 41
  installation of bedding and backfill, 41
  installation of VCP, 41
VOLCLAY WATERSTOP RX, 46

—W—

warning lights, 10
warning signs, 10
water and sewer mains, general installation, 31
water hammer, 44
water main testing, 76
water mains
  air release valves, 22
  air valve vault, 22
  butterfly valves, 22
  DIP, 21
  DIP fittings, 21
  DIP joints, 21
  filling, sterilization and flushing, 66
  fire hydrants, 23
  flush hydrants, 23
  gate valves, 22
  materials, general, 20
  PCCP, 21
  PVC pipe, 21
  PVC, locator wire and signs, 21
  PVC, push-on joints, 18, 21
  PVC, solvent cement joints, 18, 21
  valve markers, 23
  valves, general, 22
water mains, filling, 67
water mains, flushing, 67
water mains, installation
  bell ends to face direction of laying, 61
  cleaning of pipes and fittings, 61
  crossing existing utilities, 61
  dead-end water mains, 61
  different metallic pipe materials, 62
  DIP, 61
  DIP with mechanical joints, 62
  DIP with push-on joints, 61
  DIP, bedding and backfill, 62
  fire lines, 63
  general, 61

inspection of pipes and fittings, 61
maintaining existing services, 61
minimum cover, 61
on 10% grade or greater, 61
PCCP, 63
permissible deflection at joints, 61
PVC pipe, 62
PVC pipe, bedding and backfill, 63
PVC pipe, field-cutting, 63
PVC, locator wire, 62
service connections, 67
water mains, pressure and leakage test, 76
water mains, purification test, 77
water mains, purification testing, 67
water mains, rechlorination of, 77
water mains, tapping of existing, 67
water mains, tapping of newly-installed, 67
water meter, dual setups, 68
water pipes, 21
water service marker, 67
water service transfers, 61
water services, 61
FastTap, 21, 62
fittings, 22
meter setup, 21, 62
type K copper, 21, 22, 62
water table, 75
water, removal of, 36
water, use of, 10
waterproofing, 17, 43, 44, 46
waterproofing of wet wells, 46
wet well sealants, 46
wet well test after backfilling, 76
wet well test before backfilling, 75
wet well test, absorption time, 76
wet well test, allowable loss, 76
wet well testing, 75
wet well, only one pipe connection permitted, 46
wet well, poured-in-place, 46
wet well, pre-cast, 46
Wet wells, 46
work schedule, 9
wye, 41, 75
wyes, 13, 41, 75
wyes, inclination of, 41
wyes, location of, 41

—Y—

yoke, 22, 67, 68

SECTIONAL VIEW
SANITARY MANHOLE

MANHOLE CONSTRUCTION
Manhole shall be 4500 p.s.i. concrete reinforced with 10 x 10 - W10 x W10 welded wire fabric.
Wall and base thickness shall be a minimum of 5".

PRECAST CONCRETE RISER RINGS
No more than 12" of rings may be used to adjust the frame and cover to grade.

PRECAST ECCENTRIC TOP SECTION
Precast flat tops shall be used when the manhole is less than than 6' deep. See detail below.

JOINT SEALING
Joints between all manhole sections shall be sealed with an approved rubber gasket. See special detail below.

PRECAST MANHOLE BARREL SECTION

COMBINED PRECAST MANHOLE BASE and BARREL SECTION
The base and first barrel section shall be monolithic and additionally reinforced with 4 - #4 bar els 60" long.

CAST or CORE DRILLED OPENINGS
All openings shall be at least 3" from the top of the base part of the precast section.

BEDDING
4" of #11 stone on soil or
6" of #11 stone on rock

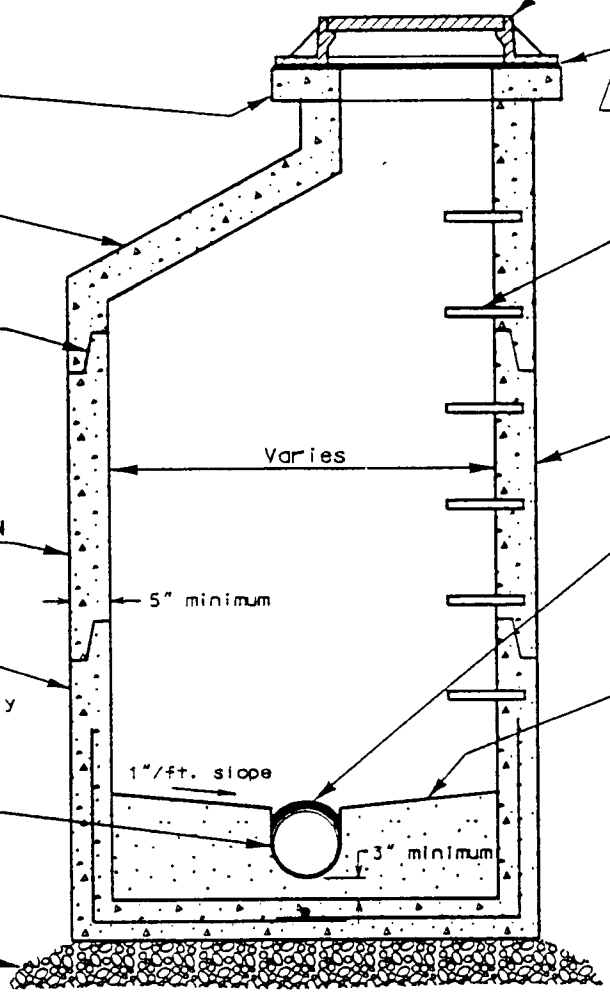

MANHOLE FRAME AND COVER
Frame shall be East Jordan Iron Works casting no. 1020, 1022 or an approved equivalent.
Cover shall be East Jordan Iron Works casting no. 1020A or an approved equivalent. "SANITARY SEWER" shall be cast in each cover.
All castings shall be coated.
Frame shall be set on 3/4" bed of waterproof, nonshrink mortar.

MANHOLE STEPS
Shall be constructed of Fiberglas reinforced polypropolene.
Install with nonshrink mortar or epoxy grout 12" to 16" apart and at a location allowing access to the table.

MANHOLE SEALANT
See 4.4.2.2.6 of CBU Specifications.

GASKETS and BOOTS
Pipe to manhole connections shall be flexible boot or cast in place gasket. See special detail below and 4.4.2.2.5 of CBU Specifications.

TROUGH and TABLE
Construct with concrete brick, and non-shrink mortar.
Troughs shall be smooth with a semicircular bottom and extend upward to the height of the pipe crown. The table shall be smooth and slope toward the trough at 1"/ft. Table and trough shall receive two coats of Drycon.
See special construction detail below.

PIPE CONNECTIONS TO MANHOLE

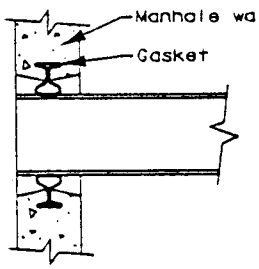

Cast in place gasket

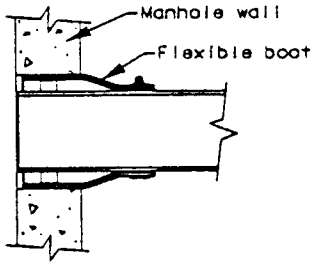

Flexible boot connector

TROUGH CONSTRUCTION

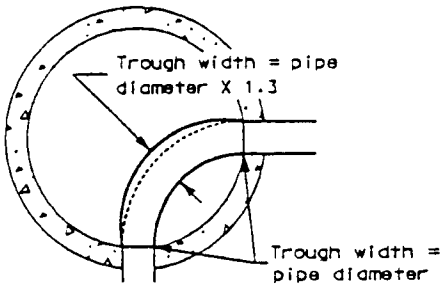

MINIMUM PIPE INVERT DROP THROUGH MANHOLE

TROUGH DEFLECTION	MIN. DROP (Ft.)
0° - 22°	.10
23° - 45°	.20
46° - 90°	.30

PRECAST SECTION JOINT

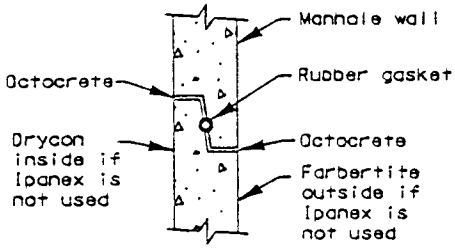

FLAT TOP CONSTRUCTION

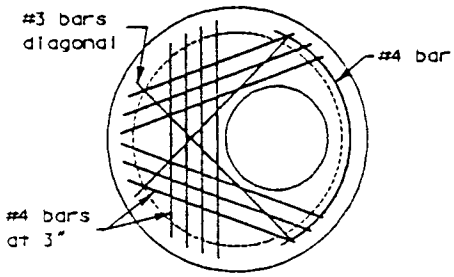

City of Bloomington Utilities Engineering Department	STANDARD SANITARY MANHOLE	STANDARD DETAIL NUMBER 1
NO SCALE 2/21/94 by: M. Hicks — Drawing File: P:\ENGINEER\DRAW\STD1.HGL Word File: P:\RULES\STD1.DOC		

An external drop pipe is required for any pipe which enters the manhole 12" or more above the outgoing pipe.

See Standard Detail Number 1 for sanitary manhole construction.

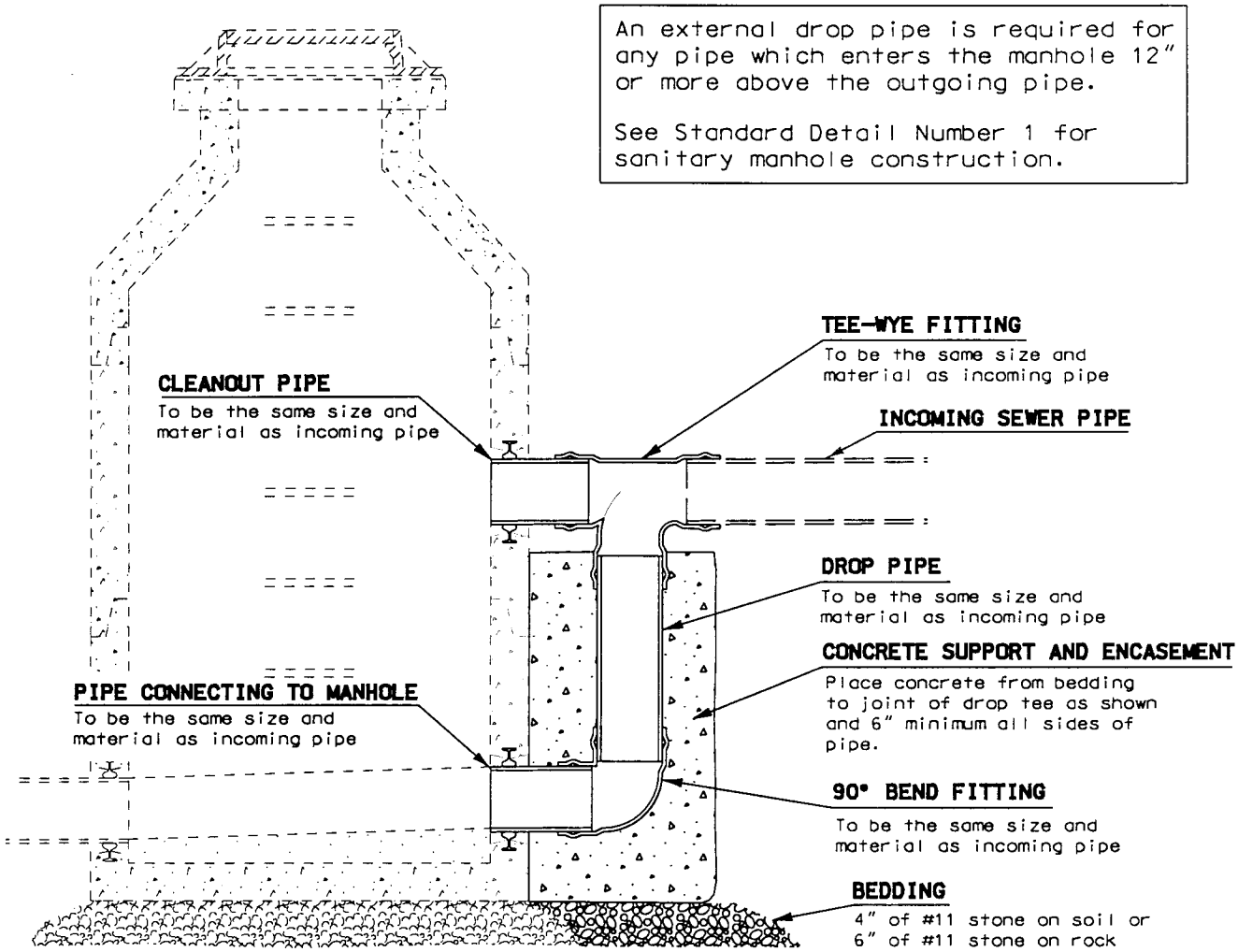

SECTIONAL VIEW

PIPE CONNECTIONS TO MANHOLE

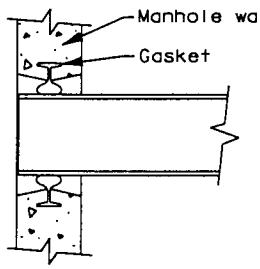

Cast in place gasket

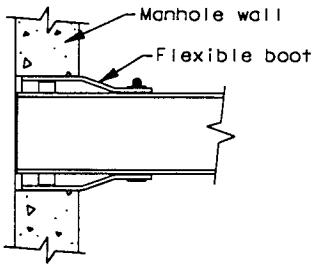

Flexible boot connector

MINIMUM PIPE INVERT DROP THROUGH MANHOLE

TROUGH DEFLECTION	MIN. DROP (Ft.)
0° - 22°	.10
23° - 45°	.20
46° - 90°	.30

City of Bloomington Utilities Engineering Department		EXTERNAL DROP PIPE DETAIL FOR SANITARY MANHOLE	STANDARD DETAIL NUMBER 2
NO SCALE 10/5/98 by: M.Hicks	Drawing File: P:\ENGINEER\DRAW\STD2.DGN Drawing File: P:\ENGINEER\DRAW\STD2.HGL Word File: P:\RULES\STD2.DOC		

PRECAST CONCRETE RISER RINGS

A minimum 2" of riser ring shall be installed in areas to be sodded or seeded. No more than 12" of rings may be used to adjust the frame and cover to grade.

PRECAST TOP SECTION

A precast flat top shall be used when pipe depth is less than 6'. An eccentric top shall be used when pipe depth is 6' or greater.

JOINT SEALING

Joints between all manhole sections shall be sealed with a minimum one inch diameter non-aspaltic mastic material. See special detail below.

PRECAST MANHOLE BARREL SECTION(S)

The minimum total height of barrel sections is 5'-0".

CAST or CORE DRILLED OPENINGS

All openings shall be at least 4" from the top of the base.

GASKETS and BOOTS

Pipe to manhole connections shall be flexible boot or cast in place gasket. See special detail below and 4.4.2.2.5 of CBU Specifications.

MANHOLE DRAIN

Drain shall be a 1' x 1' opening through the concrete base and filled with #11 stone.

MANHOLE BASE

The base shall be precast or cast-in-place. A cast-in-place base must form into the barrel section joint.

MANHOLE CONSTRUCTION

Manhole shall be 4500 p.s.i. concrete reinforced with 10 x 10 - W10 x W10 welded wire fabric.
Wall and base thickness shall be a minimum of 5".

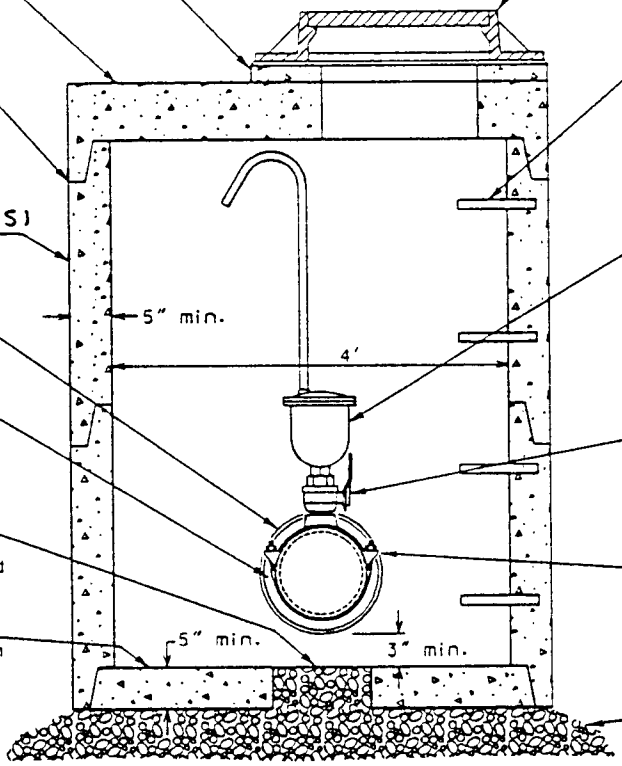

MANHOLE FRAME AND COVER

Frame shall be East Jordan Iron Works casting no. 1020, 1022 or an approved equivalent.
Cover shall be East Jordan Iron Works casting no. 1020A or an approved equivalent. "WATER" shall be cast in each cover.
All castings shall be coated.
Frame shall be set on 3/4" bed of waterproof, nonshrink mortar.

MANHOLE STEPS

Shall be constructed of Fiberglas reinforced polypropolene.
Install with nonshrink mortar or epoxy grout 12" or 16" apart and at a location allowing access to the table.

AIR VALVE

The air release, air vacumm, or combination air valve shall be sized according to system capacity and operating pressure.
The air valve shall be installed upright from a tap at the top of the water main.

CORPORATION STOP BALL VALVE

The corporation stop ball valve shall be sized to match the inlet size of the air valve. The valve shall have a lever for operation.

TAPPING SADDLE AND TAP

The tap and tapping saddle shall be sized to match the inlet size of the air valve. The tap shall be made at the top of the water main.

BEDDING

4" of #11 stone on soil or
6" of #11 stone on rock

SECTIONAL VIEW

PIPE INTERSECTIONS WITH MANHOLE

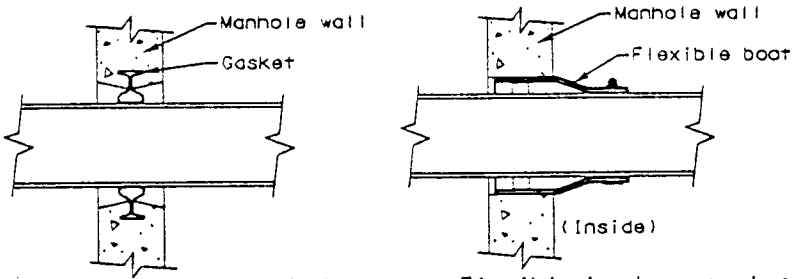

Cast in place gasket

Flexible boot connector

PRECAST SECTION JOINT

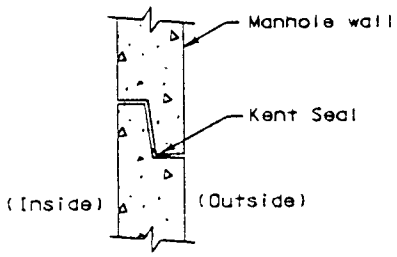

FLAT TOP CONSTRUCTION

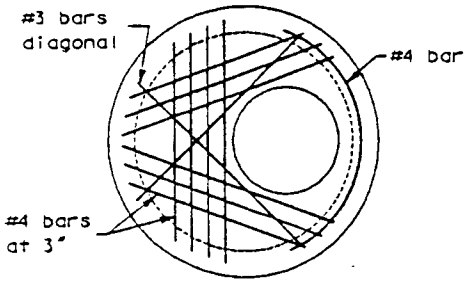

City of Bloomington Utilities Engineering Department		STANDARD AIR VALVE VAULT	STANDARD DETAIL NUMBER 3
NO SCALE 2/21/94 By: M.Hicks	Drawing File: P:\ENGINEER\DRAW\STD3.HGL Word File: P:\RULES\STD3.DOC		

PIT/VAULT (Non-traffic area)

Pit shall be reinforced cast-in-place concrete, precast concrete, or laid block.
Apply CBU approved waterproofing agent to interior and exterior of walls.
Specifications for pits in traffic areas shall be determined by design requirements.

PERMANENT BYPASS PIPE

Size to be determined by CBU Engineering Dept.

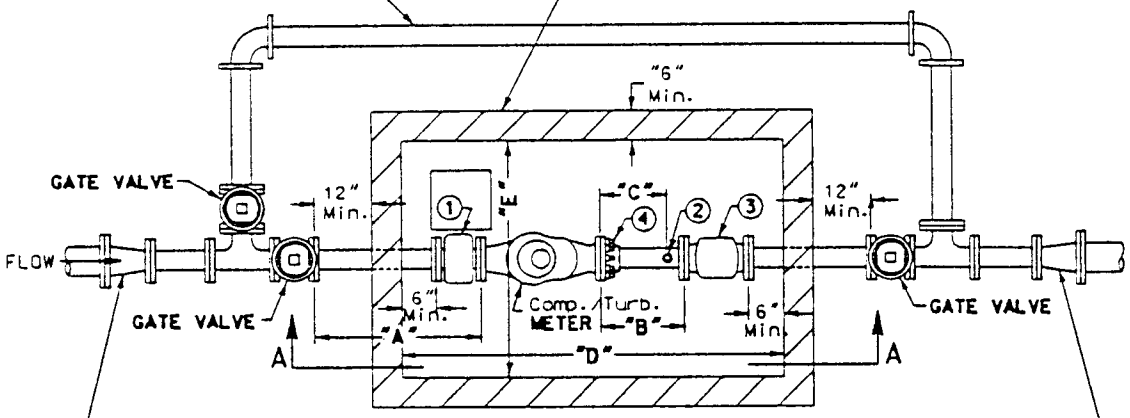

Connect with concentric reducer as required

Connect with concentric reducer as required

SECTIONAL PLAN VIEW

PIT DOOR

Door shall be aluminum, hinged, latching, locking when specified, and installed directly over the meter.

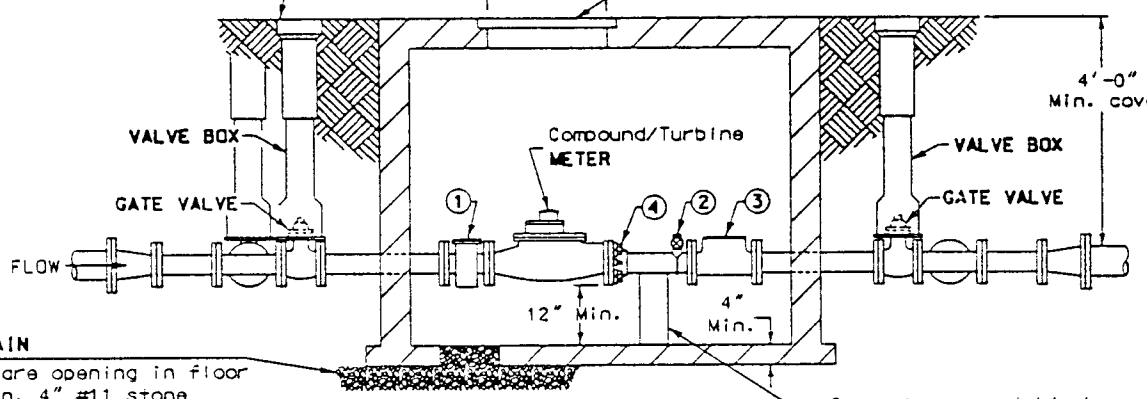

PIT DRAIN

18" square opening in floor over min. 4" #11 stone

Concrete support blocks may be required

SECTION A-A

LEGEND

1. **STRAINER**, plate-type only **
2. **2" TEST TAP** with full port corporation stop
3. **CHECK VALVE**
4. **FLANGED COUPLING ADAPTER**

NOTES

All construction and materials shall meet CBU specifications.

* If an 8" Rockwell manifold meter is used add 33".

** Use of any other type of strainer must be approved by CBU Engineering.

METER SIZE	"A" Min. length straight pipe before meter (Includes strainer)	"B" Min. length straight pipe after meter	"C" 2" test plug min. distance after meter	"D" Pit minimum inside length	"E" Pit minimum inside width	"F" Min. pit door size
3"	21"	15"	9"	63"	48"	24"x24"
4"	28"	20"	12"	78"	48"	24"x24"
6"	42"	30"	18"	91"	60"	36"x48"
8"	56"	40"	24"	124" *	96"	48"x48"
10"	70"	50"	30"	150"	96"	48"x48"

City of Bloomington Utilities Engineering Department

NO SCALE
2/21/94
by: M. Hicks

Drawing File: P:\ENGINEER\DRAW\STD4.HGL
Word File: P:\RULES\STD4.DOC

STANDARD METER PIT DETAIL
3"-10" Meter Installation

STANDARD DETAIL NUMBER 4

NOTES

1. All materials and construction shall meet CBU Construction Specifications.
2. All meter assemblies shall be specified by City of Bloomington Utilities (CBU).
3. A compact dual meter assembly is a factory assembled unit and tested for accuracy as a unit by the manufacturer.
4. Each meter shall be equipped with a pit door mounted electronic device for use with a touch reading system.
5. All fittings such as bends and tees shall be properly restrained.

PIT/VAULT (Non-traffic area)
Pit shall be reinforced cast-in-place concrete, precast concrete, or laid block.
Apply CBU approved waterproofing agent to interior and exterior of walls.
Specifications for pits in traffic areas shall be determined by design requirements.
Refer to CBU Specifications, Section 4.5.3.3 for additional information.

PERMANENT BYPASS PIPE
Size to be same as fire meter and minimum 6".

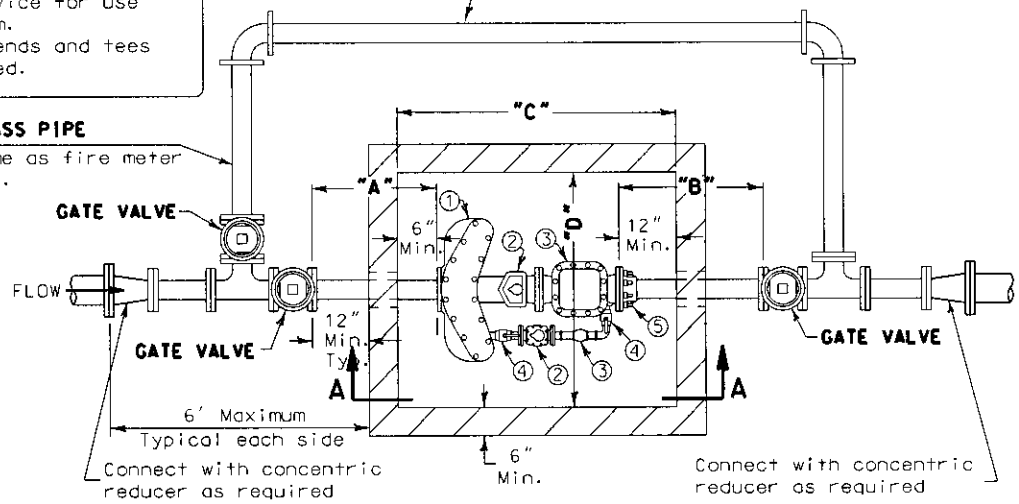

SECTIONAL PLAN VIEW

LEGEND

1. **UL/FM APPROVED STRAINER**
2. **METER** See Notes above
3. **CHECK VALVE**
4. **FULL PORT BALL VALVE WITH LEVER** if less than or equal to 2" **GATE VALVE WITH HAND WHEEL** if greater than or equal to 4"
5. **FLANGED COUPLING ADAPTER**

PIT DOOR
Door shall be Bilco, Type "J", aluminum, or approved equal. Door shall be cast into concrete or grouted into precast opening directly over the assembly.

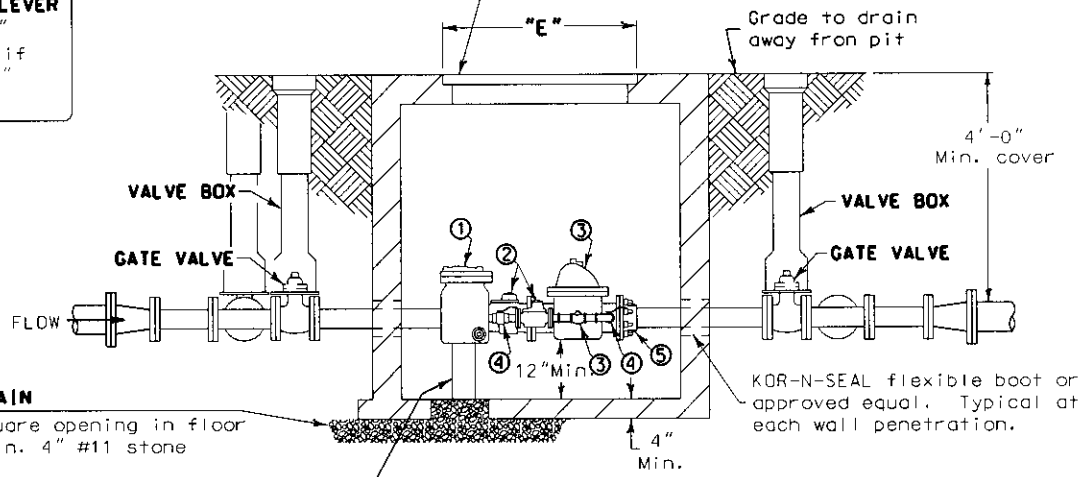

PIT DRAIN
18" square opening in floor over min. 4" #11 stone

Place concrete support blocks to support assembly.

SECTION A-A

FIRE METER SIZE	"A" Min. length straight pipe before compact assembly	"B" Min. length straight pipe after compact assembly	"C" Pit minimum inside length	"D" Pit minimum inside width	"E" Min. pit door size
4"	24"	30"	51"	60"	36"x36"
6"	30"	30"	63"	66"	36"x36"
8"	40"	30"	71"	70"	48"x48"
10"	50"	30"	86"	74"	48"x48"

City of Bloomington Utilities Engineering Department

NO SCALE
8/27/96
by: M. Hicks

Drawing File: I:\COMMON\STANDARD DETAIL DRAWINGS/STD6.DGN

DUAL FIRE/DOMESTIC METER ASSEMBLY
4"-10" Meter Installation

STANDARD DETAIL NUMBER 6

DOUBLE CHECK VALVE DETECTOR ASSEMBLY
The double check valve detector assembly shall be designed for firelines to prevent backflow from the fire protection system to the potable water system and also detect leakage or unauthorized use. Pressure loss to open the valve shall not exceed 1.5 p.s.i. The double check detector assembly shall consist of two independently operating, spring loaded check valves, two UL, FM, OSY resilient wedge gate valves, and bypass assembly. Use Ames 3000SS or approved equal. Connect to piping with a flange adapter coupling.

IMPORTANT NOTE
If the detector check valve is greater than 50 feet from the City water main, a check valve in a pit shall be required at the City main.

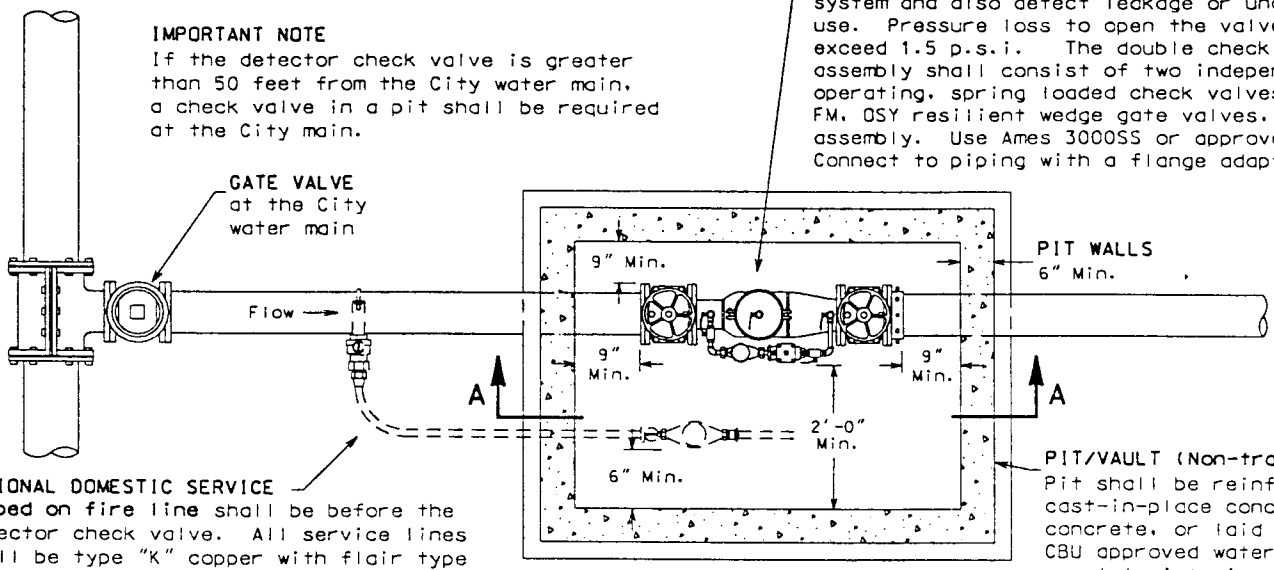

OPTIONAL DOMESTIC SERVICE tapped on fire line shall be before the detector check valve. All service lines shall be type "K" copper with flair type joints. All fittings shall conform to ANSI/AWWA C800 and 4.4.4.1.4.1 of CBU Construction Specifications. Install in a yoke with an angle yoke valve each side of meter. Install 24" to 36" from the bottom of the door.

PIT/VAULT (Non-traffic area)
Pit shall be reinforced cast-in-place concrete, precast concrete, or laid block. Apply CBU approved waterproofing agent to interior and exterior of walls. Specifications for pits in traffic areas shall be determined by design requirements.

SECTIONAL PLAN VIEW

PIT DOOR
Door shall be 3'x 3' minimum, aluminum, hinged, latching, locking when specified, and installed directly over the detector check valve. Pit door shall be Bilco type K.

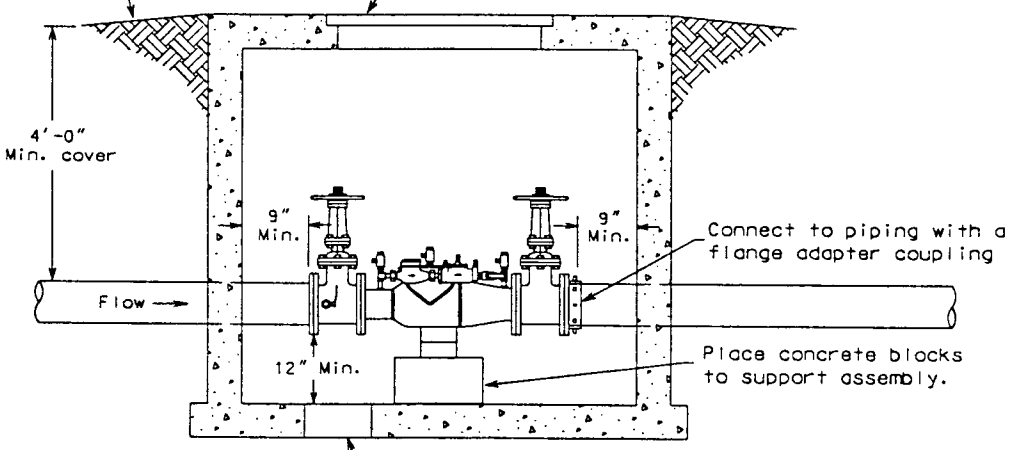

PIT DRAIN
12" square opening in floor over min. 4" No.11 stone

SECTION A-A

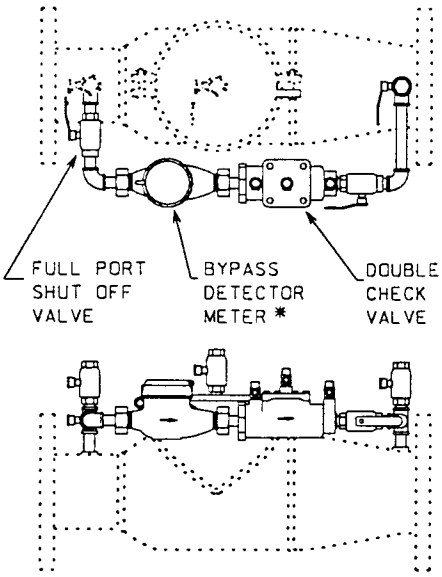

BYPASS ASSEMBLY

* Bypass Detector Meter to read gallons

LAST REVISION 2 /13 /97

City of Bloomington Utilities Engineering Department

NO SCALE
9 /1 /94
By: M. Hicks

Drawing File: P:\ENGINEER\DRAW\STD7.HGL
Word File: P:\RULES\STD7.DOC

STANDARD FIRE LINE DOUBLE CHECK VALVE / DETECTOR METER INSTALLATION DETAIL

STANDARD DETAIL NUMBER 7

IMPORTANT NOTE
If the detector check valve is greater than 50 feet from the City water main, a check valve in a pit shall be required at the City main.

WATER METER
For more Water Meter Construction Specifications see "Standard Detail No. 4"

DOUBLE CHECK VALVE DETECTOR ASSEMBLY
The double check valve detector assembly shall be designed for firelines to prevent backflow from the fire protection system to the potable water system and also detect leakage or unauthorized use. Pressure loss to open the valve shall not exceed 1.5 p.s.i. The double check detector assembly shall consist of two independently operating, spring loaded check valves, two UL, FM, OSY resilient wedge gate valves, and bypass assembly. Use Ames 3000SS or approved equal. Connect to piping with a flange adapter coupling.

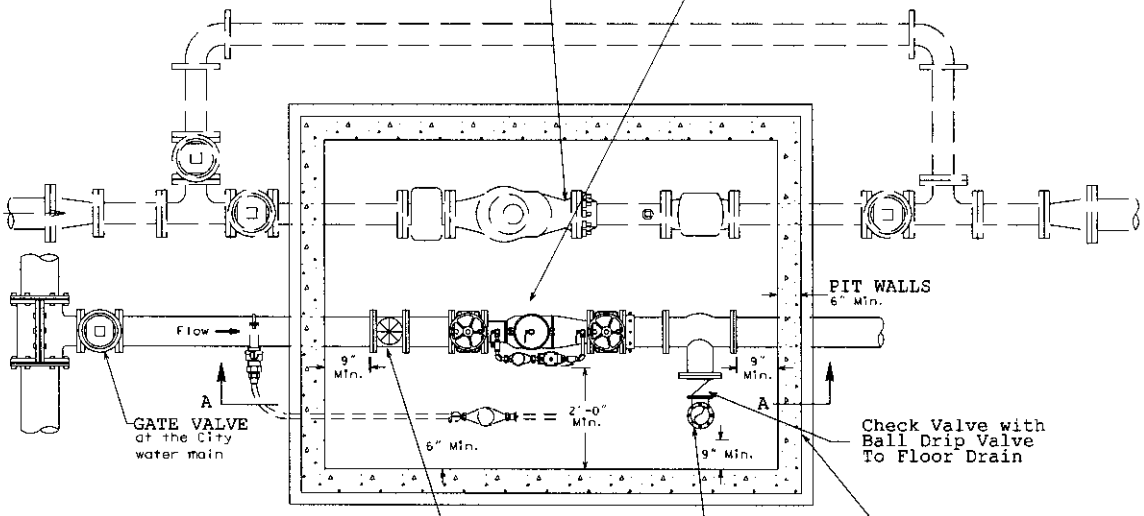

PIT/VAULT (Non-traffic area)
Pit shall be reinforced cast-in-place concrete, precast concrete, or laid block. Apply CBU approved waterproofing agent to interior and exterior of walls. Specifications for pits in traffic areas shall be determined by design requirements.

OPTIONAL DOMESTIC SERVICE
tapped on fire line shall be before the detector check valve. All service lines shall be type "K" copper with flair type joints. All fittings shall conform to ANSI/AWWA C800 and 4.4.4.1.4.1 of CBU Construction Specifications. Install in a yoke with an angle yoke valve each side of meter. Install 24" to 36" from the bottom of the door.

O, S & Y Valve with Post Indicator

4" Extension up to Fire Department Connection

SECTIONAL PLAN VIEW

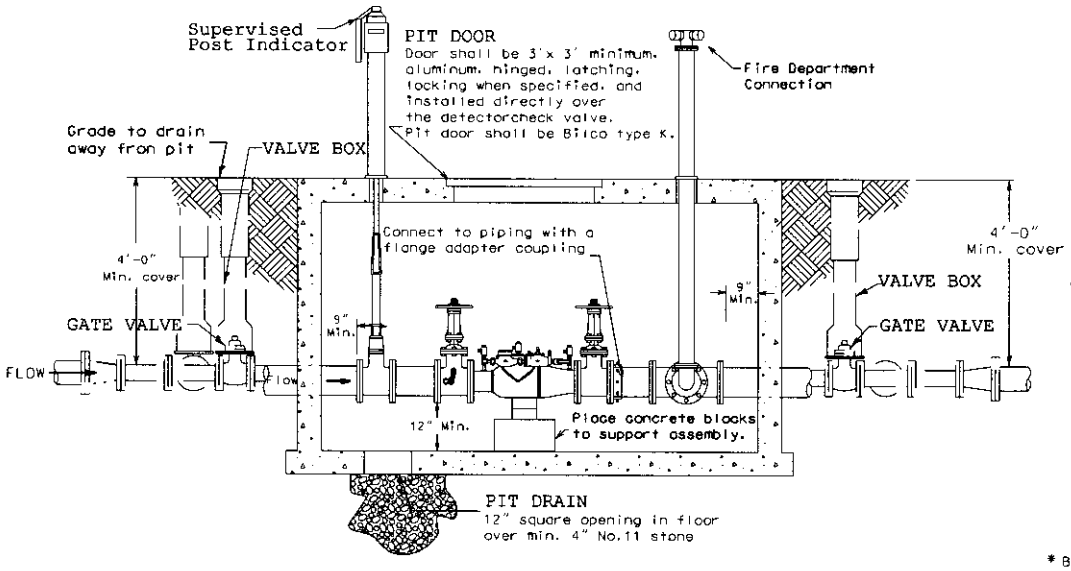

SECTION A-A

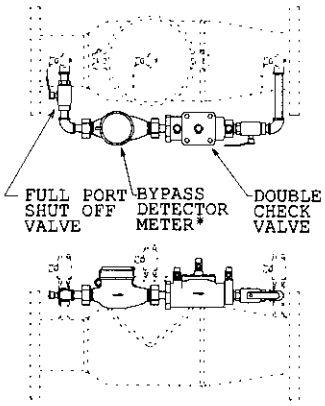

BYPASS ASSEMBLY

* Bypass Detector Meter to read gallons

LAST REVISION 7 /20 /04

City of Bloomington Utilities Engineering Department	
NO SCALE 7 /20 /04 By: B. Kiele-Dunsche	Drawing File: P:\ENGINEER\DRAW\STD7.HGL Word File: P:\RULES\STD7-2/97.DOC

STANDARD FIRE LINE DOUBLE CHECK VALVE / DETECTOR METER INSTALLATION DETAIL

STANDARD DETAIL NUMBER **7a**

SECTIONAL PLAN VIEW

IMPORTANT NOTE
If the detector check valve is greater than 50 feet from the City water main, a check valve in a pit shall be required at the City main.

DOUBLE CHECK VALVE DETECTOR ASSEMBLY
The double check valve detector assembly shall be designed for firelines to prevent backflow from the fire protection system to the potable water system and also detect leakage or unauthorized use. Pressure loss to open the valve shall not exceed 1.5 p.s.i. The double check detector assembly shall consist of two independently operating, spring loaded check valves, two UL, FM, OSY resilient wedge gate valves, and bypass assembly. Use Ames 3000SS or approved equal. Connect to piping with a flange adapter coupling.

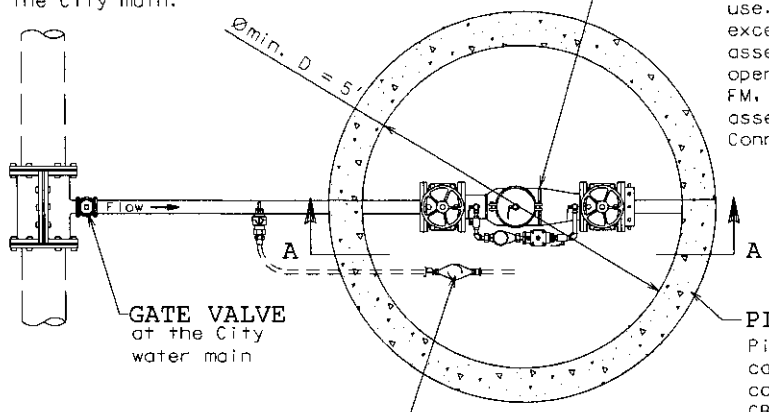

GATE VALVE
at the City water main

PIT/VAULT (Non-traffic area)
Pit shall be reinforced cast-in-place concrete, precast concrete, or laid block. Apply CBU approved waterproofing agent to interior and exterior of walls. Specifications for pits in traffic areas shall be determined by design requirements.

OPTIONAL DOMESTIC SERVICE tapped on fire line
shall be before the detector check valve. All service lines shall be type "K" copper with flair type joints. All fittings shall conform to ANSI/AWWA C800 and 4.4.4.1.4.1 of CBU Construction Specifications. Install in a yoke with an angle yoke valve each side of meter. Install 24" to 36" from the bottom of the door.

PIT DOOR
Door shall be 3'x 3' minimum, aluminum, hinged, latching, locking when specified, and installed directly over the detectorcheck valve. Pit door shall be Bilco type K.

SECTION A-A

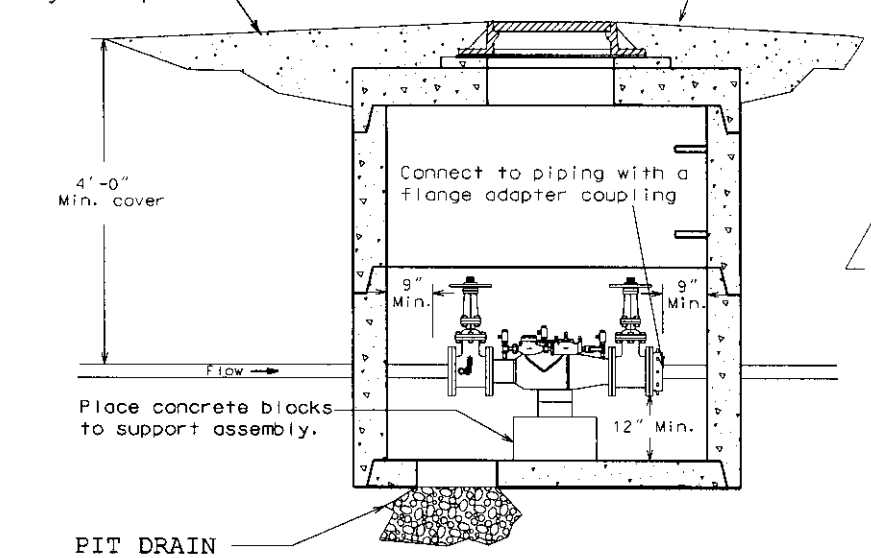

PIT DRAIN
12" square opening in floor over min. 4" No.11 stone

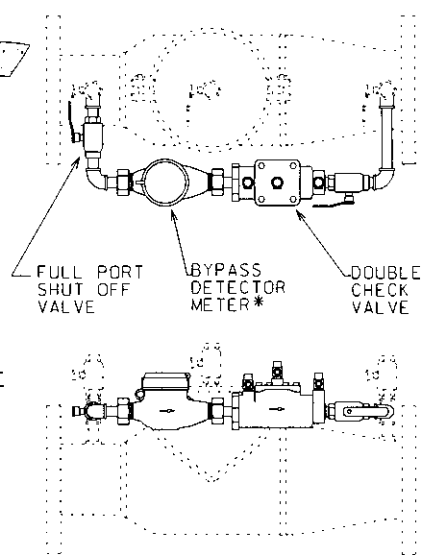

BYPASS ASSEMBLY

* Bypass Detector Meter to read gallons

LAST REVISION 7 /28 /04

City of Bloomington Utilities Engineering Department	
NO SCALE 7 /28 /04 By: B. Kiele-Dunsche	Drawing File: P:\ENGINEER\DRAW\STD7.HGL Word File: P:\RULES\STD7-297.DOC

STANDARD FIRE LINE DOUBLE CHECK VALVE / DETECTOR METER INSTALLATION DETAIL

STANDARD DETAIL NUMBER **7b**

FIRE HYDRANT

Fire hydrants shall conform to ANSI/AWWA C502 and must be Kennedy Guardian model K81A or Mueller Super Centurion 200 (catalog no. A-423). These are dry-barrel type fire hydrants with a 5¼" main valve opening, two hose nozzles and one pumper nozzle. Hydrants shall have a mechanical joint type connection and shall have a primer coat of silver enamel.

Install fire hydrant at a minimum of 2' from structures or obstructions and set the hydrant bury line 2" above finished grade. The pumper nozzle must face the street.

NOTES

1. For connection to existing water mains, a 6" tapping valve and saddle shall be used in place of the gate valve and anchor coupling.

6" M.J. GATE VALVE (See Note 1)
Gate valves shall be cast iron body, fully bronze mounted, with a resilient seat and a non rising stem in accordance with AWWA C509.

VALVE BOX
Valve box shall be a cast iron, three-piece adjustable type. Cover shall be labeled "WATER".

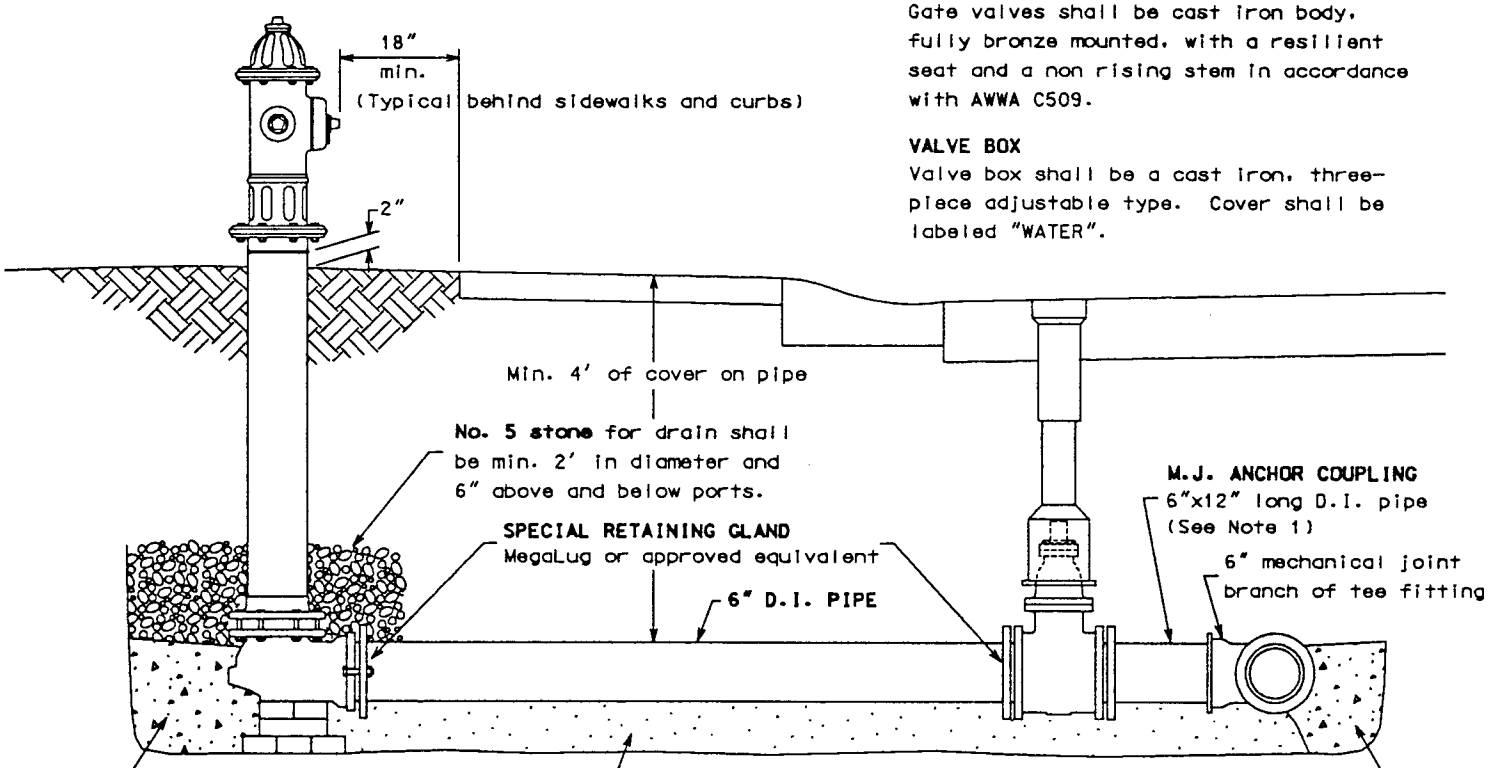

CONCRETE THRUST BLOCK shall extend horizontally to undisturbed soil. Taper thrust block form to hydrant elbow and form clear of drain valve openings.

Place the hydrant elbow on solid concrete brick or flat stone.

PIPE BEDDING
4" of no. 11 stone in soil or
6" of no. 11 stone in rock

CONCRETE THRUST BLOCK shall extend horizontally to undisturbed soil.

BACKFILL
No. 11 stone from bedding to pipe springline.
Compacted No. 53 stone beneath and within 5' of pavement or clean native soil in other areas.

City of Bloomington Utilities Engineering Department		STANDARD FIRE HYDRANT AND CONNECTION DETAIL	STANDARD DETAIL NUMBER 8
NO SCALE 9/1/94 M.Hicks	Drawing File: P:\ENGINEER\DRAW\STD8.HGL Word File: P:\RULES\STD8.DOC		

PRECAST CONCRETE RISER RINGS

A minimum 2" of riser ring shall be installed in areas to be sodded or seeded. No more than 12" of rings may be used to adjust the frame and cover to grade.

PRECAST TOP SECTION

A precast flat top shall be used when pipe depth is less than 6'. An eccentric top shall be used when pipe depth is 6' or greater.

JOINT SEALING

Joints between all manhole sections shall be sealed with a minimum one inch diameter non-aspaltic mastic material. See special detail below.

PRECAST MANHOLE BARREL SECTION(S)

The minimum total height of barrel sections is 5'-0".

CAST or CORE DRILLED OPENINGS

All openings shall be at least 4" from the top of the base.

GASKETS and BOOTS

Pipe to manhole connections shall be flexible boot or cast in place gasket. See special detail below and 4.4.2.2.5 of CBU Specifications.

MANHOLE DRAIN

Drain shall be a 1' x 1' opening through the concrete base and filled with #11 stone.

MANHOLE BASE

The base shall be precast or cast-in-place. A cast-in-place base must form into the barrel section joint.

MANHOLE CONSTRUCTION

Manhole shall be 4500 p.s.i. concrete reinforced with 10 x 10 - W10 x W10 welded wire fabric.
Wall and base thickness shall be a minimum of 5".

MANHOLE FRAME AND COVER

Frame shall be East Jordan Iron Works casting no. 1020, 1022 or an approved equivalent.
Cover shall be East Jordan Iron Works casting no. 1020A or an approved equivalent. "WATER" shall be cast in each cover.
All castings shall be coated.
Frame shall be set on 3/4" bed of waterproof, nonshrink mortar.

MANHOLE STEPS

Shall be constructed of Fiberglas reinforced polypropolene.
Install with nonshrink mortar or epoxy grout 12" or 16" apart and at a location allowing access to the table.

CHECK VALVE

Swing type gravity operated with rubber faced disc and flanged ends. Check valve shall be manufactured by Mueller co., Kennedy valve, or a CBU approved equal

BEDDING

4" of #11 stone on soil or
6" of #11 stone on rock

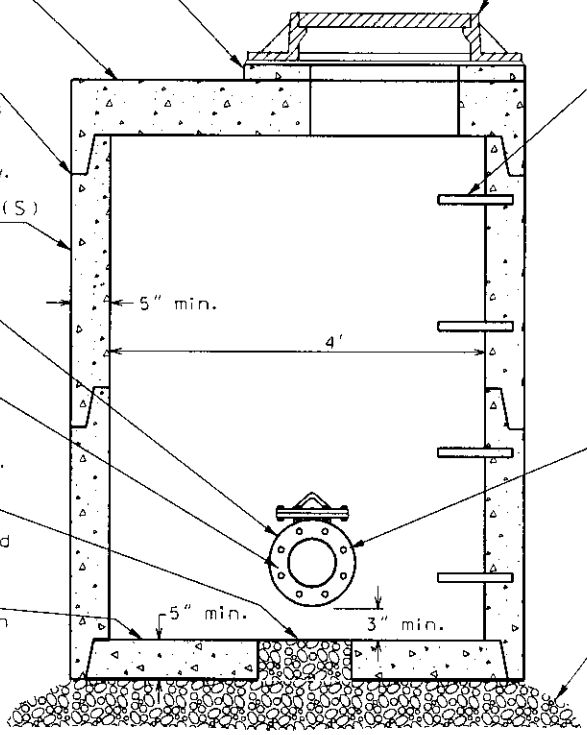

SECTIONAL VIEW

PIPE INTERSECTIONS WITH MANHOLE

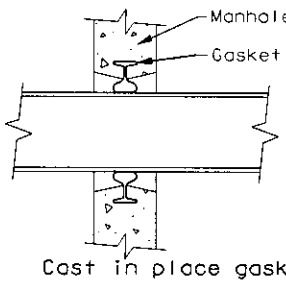

Cast in place gasket

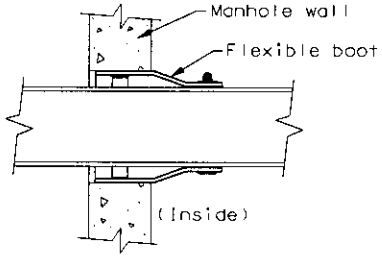

Flexible boot connector

PRECAST SECTION JOINT

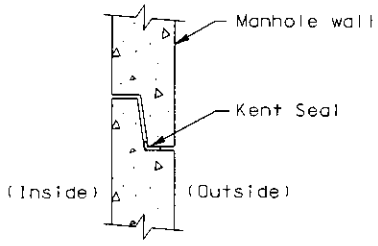

FLAT TOP CONSTRUCTION

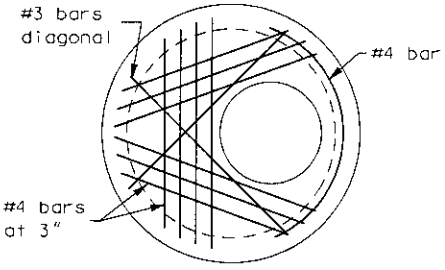

City of Bloomington Utilities Engineering Department		STANDARD CHECK VALVE & VAULT	STANDARD DETAIL NUMBER 9
NO SCALE 09/21/04 by: B. Klele-Dunsche	Drawing File: I:\COMMON\STANDARDDRAWINGS\STD9.DGN		

EXCAVATION DEPTH
When pipe grades are not defined on the contract drawings, maintain a minimum of 48 inches of cover over the top of the pipe except as otherwise ordered by the Engineer.

TRENCH SAFETY SYSTEMS
All trench work shall be in compliance with OSHA Part 26 of the Code of Federal Regulations.

Repair surface as indicated in the Special Conditions.

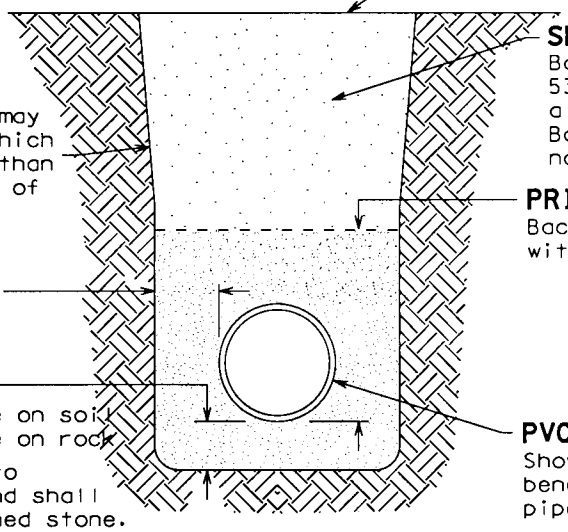

SECONDARY BACKFILL
Backfill full depth compacted no. 53 stone beneath and within 5' of all roadways and driveways. Backfill with compacted clean native soil in all other areas.

TRENCH BANKS
Where necessary, banks may be cut back on slopes which shall not extend lower than 12 inches above the top of pipe.

PRIMARY BACKFILL
Backfill 12" above crown of pipe with no.11 or no.12 stone.

Trench wall shall be 7" minimum from the pipe each side.

PIPE BEDDING
4" no.11 or no.12 stone on soil
6" no.11 or no.12 stone on rock

Bedding shall conform to ASTMD-2321, Class 1, and shall be no.11 or no.12 crushed stone. All over-excavation shall be filled with crushed stone or Class D concrete.

PVC PIPE
Shovel cut and compact backfill beneath the haunch area of the pipe.

TYPICAL TRENCH SECTION

City of Bloomington Utilities Engineering Department	
NO SCALE	Drawing File: P:\ENGINEER\DRAW\STD11.DGN
11/21/00	Drawing File: P:\ENGINEER\DRAW\STD11.HGL
M.Hicks	Word File: P:\RULES\STD11.DOC

BEDDING AND BACKFILL DETAIL FOR PVC PIPE LESS THAN 18" DIA.

STANDARD DETAIL NUMBER 11

EXCAVATION DEPTH

When pipe grades are not defined on the contract drawings, maintain a minimum of 48 inches of cover over the top of the pipe except as otherwise ordered by the Engineer.

TRENCH SAFETY SYSTEMS

All trench work shall be in compliance with OSHA Part 26 of the Code of Federal Regulations.

Repair surface as indicated in the Special Conditions.

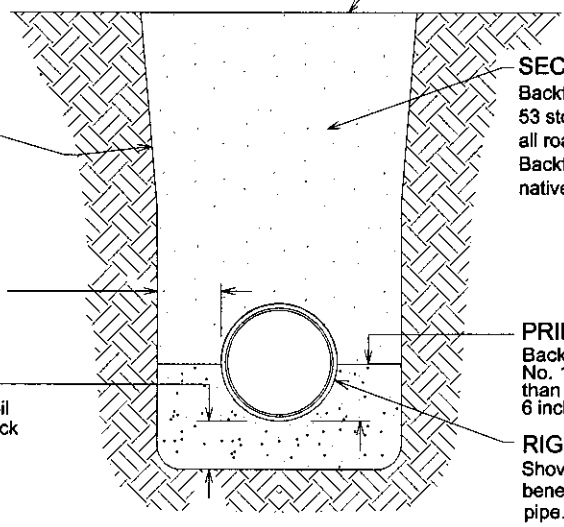

SECONDARY BACKFILL

Backfill full depth compacted no. 53 stone beneath and within 5' of all roadways and driveways. Backfill with compacted clean native soil in all other areas.

TRENCH BANKS

Where necessary, banks may be cut back on slopes which shall not extend lower than 12 inches above the top of pipe.

Trench wall shall be 7" minimum from the pipe each side.

PRIMARY BACKFILL

Backfill to springline of pipe with No. 11 stone.When cover is less than 3 feet no. 53 stone shall extend 6 inches above crown of pipe.

PIPE BEDDING

4" No. 11 stone or no. 12 stone on soil
6" No. 11 stone or no. 12 stone on rock
Bedding shall conform to ASTMD-2321, Class 1, and shall be no. 11 or 12 crushed stone. All over-excavation shall be filled with crushed stone or Class D concrete.

RIGID PIPE

Shovel cut and compact backfill beneath the haunch area of the pipe.

TYPICAL TRENCH SECTION

City of Bloomington Utilities Engineering Department		BEDDING AND BACKFILL DETAIL FOR ALL RIGID PIPES	STANDARD DETAIL NUMBER 12
NO SCALE 9/20/04 B. Kiele-Dunsche	Drawing File: I:\COMMON\STANDARD DRAWINGS\STD12.DGN		

EXCAVATION DEPTH
When pipe grades are not defined on the contract drawings, maintain a minimum of 48 inches of cover over the top of the pipe except as otherwise ordered by the Engineer.

TRENCH SAFETY SYSTEMS
All trench work shall be in compliance with OSHA Part 26 of the Code of Federal Regulations.

Repair surface as indicated in the Special Conditions.

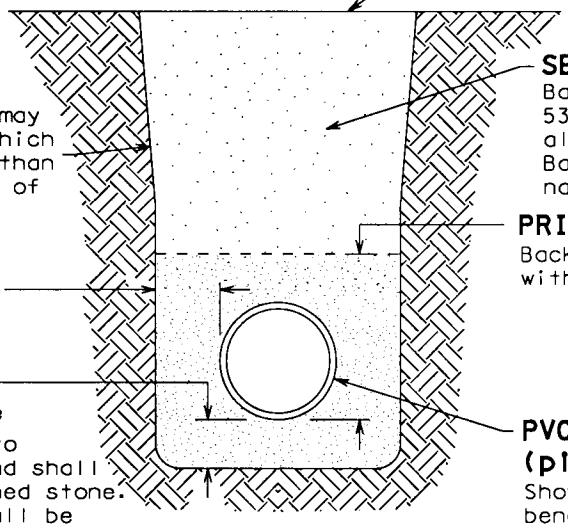

SECONDARY BACKFILL
Backfill full depth compacted no. 53 stone beneath and within 5' of all roadways and driveways. Backfill with compacted clean native soil in all other areas.

TRENCH BANKS
Where necessary, banks may be cut back on slopes which shall not extend lower than 12 inches above the top of pipe.

PRIMARY BACKFILL
Backfill 12" above crown of pipe with no.11 or no.12 stone.

Trench wall shall be 7" minimum from the pipe each side.

PIPE BEDDING
6" no.11 or no.12 stone
Bedding shall conform to ASTMD-2321, Class 1, and shall be no.11 or no.12 crushed stone. All over-excavation shall be filled with crushed stone or Class D concrete.

PVC PROFILE PIPE or F679 PVC (pipes 18" diameter or larger)
Shovel cut and compact backfill beneath the haunch area of the pipe.

TYPICAL TRENCH SECTION

City of Bloomington Utilities Engineering Department	BEDDING AND BACKFILL DETAIL FOR PVC PROFILE PIPE AND F679 PVC (pipes 18" dia. or larger)	STANDARD DETAIL NUMBER 13
NO SCALE 11/28/00 M.Hicks — Drawing File: P:\ENGINEER\DRAW\STD13.HGL Word File: P:\RULES\STD13.DOC		

WATER SERVICE FROM A 2" PVC WATER MAIN TO A SINGLE METER SETUP

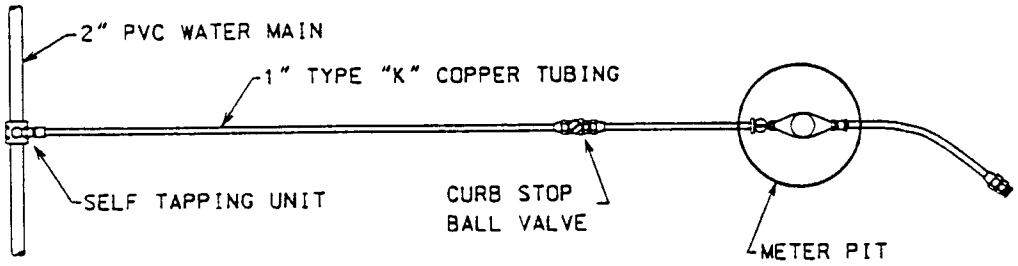

WATER SERVICE FROM A 2" PVC WATER MAIN TO A DOUBLE METER SETUP

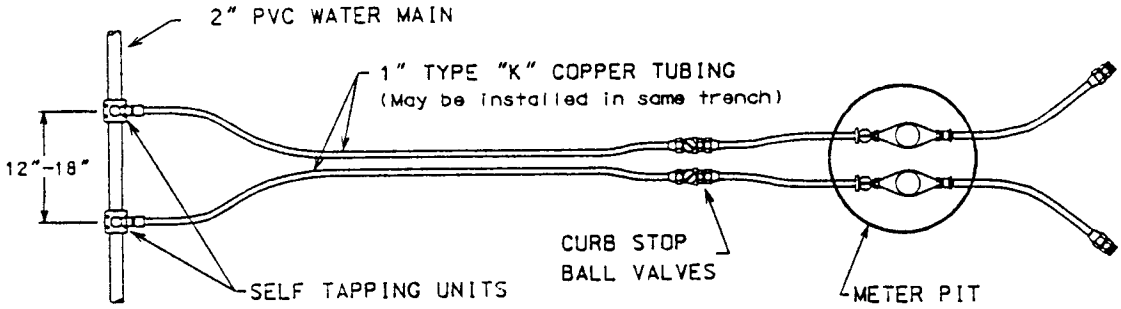

SELF TAPPING UNIT WITH COMPRESSION CONNECTOR OUTLET (2" MAIN X 1" COPPER TUBING STYLE)

Self tapping unit shall be FastTap by Continental Water Products or equal.

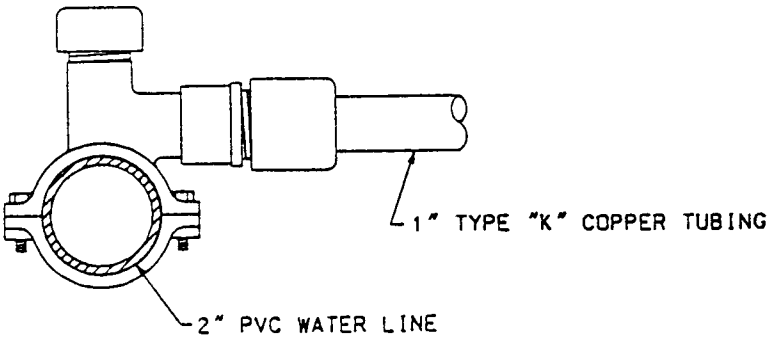

City of Bloomington Utilities Engineering Department	STANDARD WATER SERVICE FROM A 2 INCH PVC WATER MAIN	STANDARD DETAIL NUMBER 15
NO SCALE 2/21/94 by: M. Hicks Drawing File: P:\ENGINEER\DRAW\STD15.HGL Word File: P:\RULES\STD15.DOC		

Duration		Return Period Rainfall Depth (Inches)					
Hours	Minutes	2	5	10	25	50	100
0.08	5	0.461	0.535	0.590	0.674	0.739	0.805
0.17	10	0.705	0.841	0.940	1.087	1.201	1.315
0.25	15	0.875	1.054	1.184	1.374	1.522	1.67
0.5	30	1.152	1.437	1.638	1.9276	2.152	2.376
1	60	1.44	1.835	2.11	2.503	2.807	3.11
2	120	1.75	2.18	2.45	2.81	3.17	3.43
3	180	1.9	2.38	2.75	3.12	3.41	3.8
6	360	2.3	2.82	3.25	3.69	4.05	4.45
12	720	2.7	3.38	3.85	4.35	4.86	5.35
24	1440	3.08	3.91	4.39	5.01	5.6	6.09

DEPTH DURATION FREQUENCY TABLE

for Bloomington, Indiana

Duration		Return Period Rainfall Depth (Inches)					
Hours	Minutes	2	5	10	25	50	100
0.083	5	5.532	6.414	7.081	8.083	8.874	9.66
0.167	10	4.232	5.046	5.642	6.520	7.208	7.892
0.25	15	3.5	4.216	4.735	5.494	6.089	6.68
0.5	30	2.303	2.874	3.276	3.854	4.304	4.751
1	60	1.44	1.835	2.111	2.503	2.807	3.11
2	120	0.875	1.09	1.225	1.405	1.585	1.715
3	180	0.633	0.793	0.917	1.04	1.137	1.267
6	360	0.383	0.47	0.542	0.615	0.675	0.742
12	720	0.225	0.282	0.321	0.363	0.405	0.446
24	1440	0.128	0.163	0.183	0.209	0.233	0.254

INTENSITY DURATION FREQUENCY TABLE

for Bloomington, Indiana

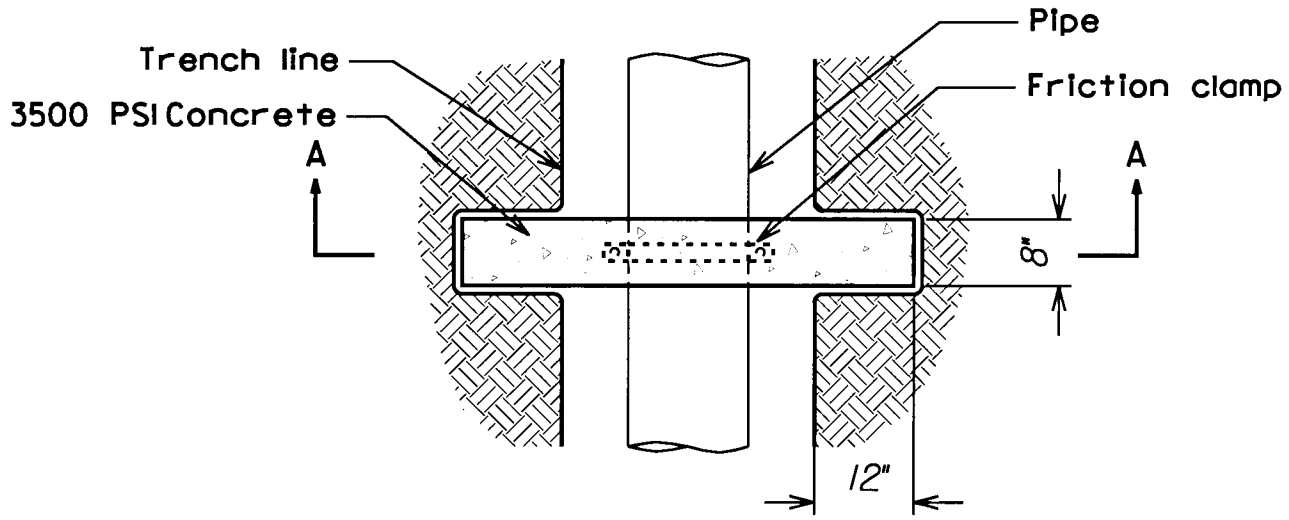

SECTIONAL TOP VIEW

ANCHOR SHALL EXTEND 12" BEYOND TRENCH INTO UNDISTURBED SOILS AND 12" ABOVE THE PIPE AND 12" BELOW THE TRENCH

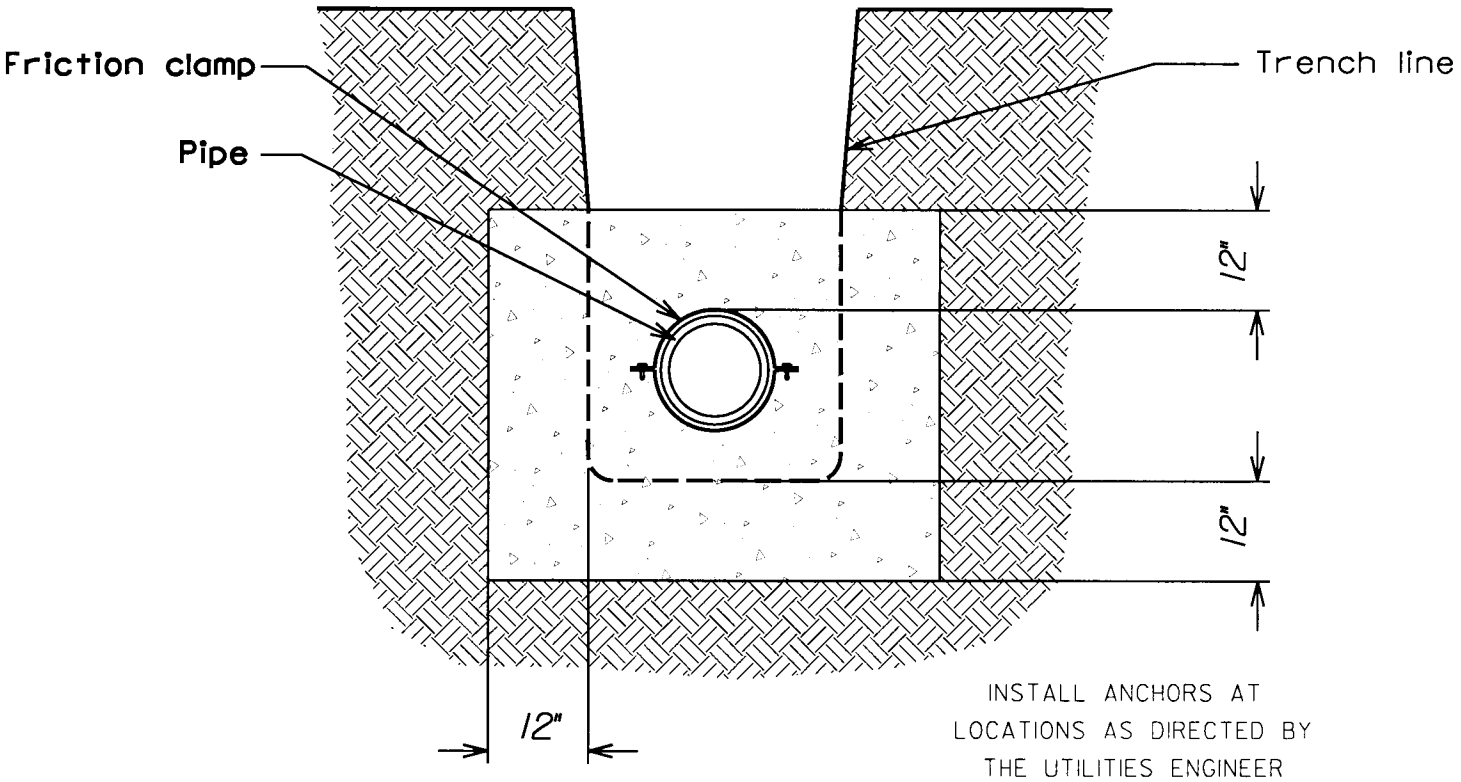

INSTALL ANCHORS AT LOCATIONS AS DIRECTED BY THE UTILITIES ENGINEER

SECTION A - A

City of Bloomington Utilities Engineering Department		CONCRETE PIPE ANCHOR	STANDARD DETAIL NUMBER 17
NO SCALE 03/11/02 J. Roosmann	Drawing File: J:\common\ENGINEER\DRAW\STD17.DGN		

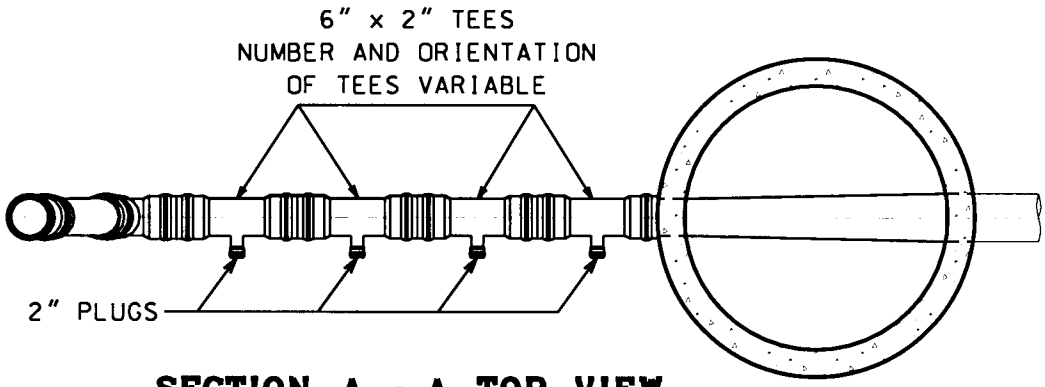

SECTION A - A TOP VIEW

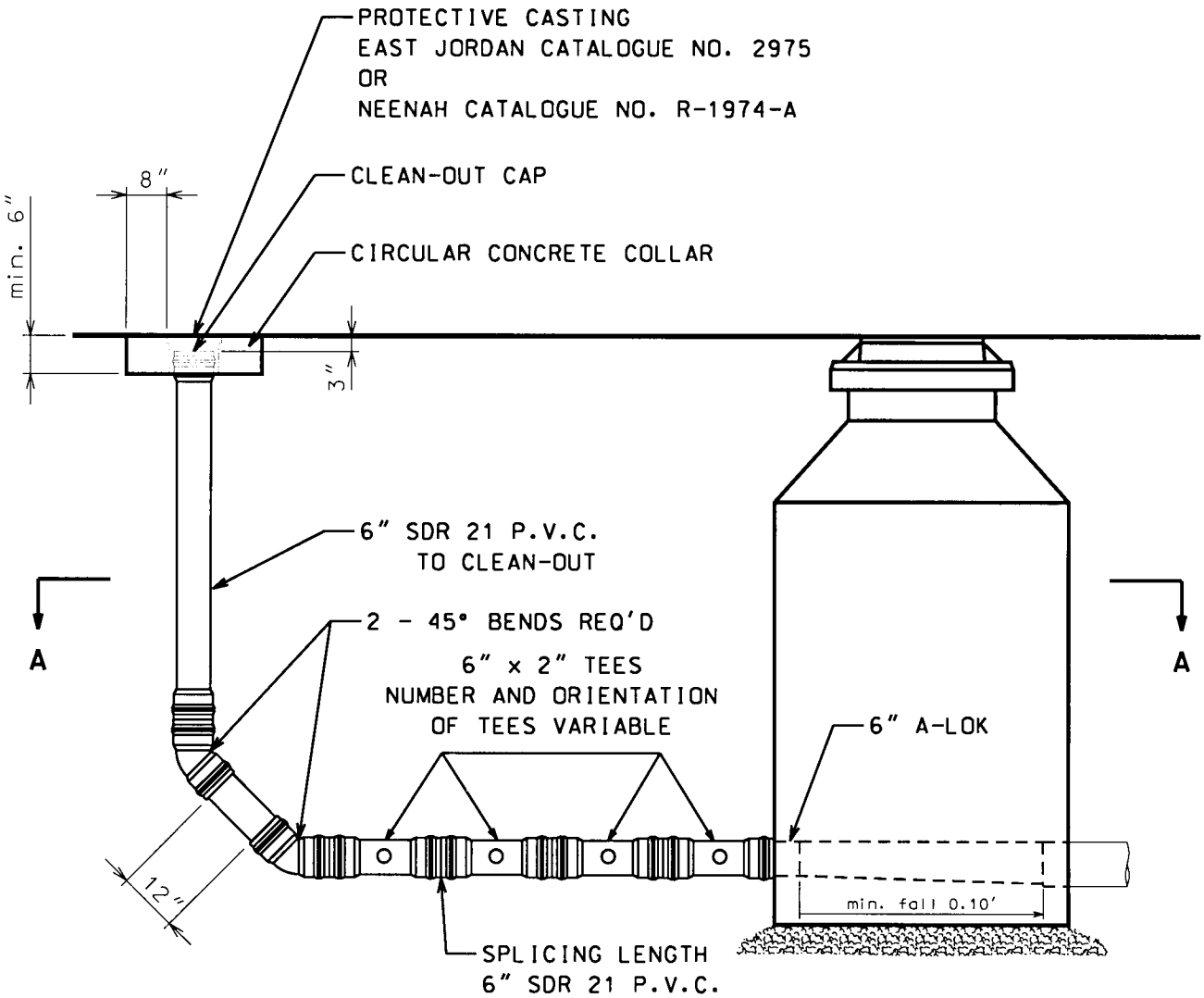

PROFILE

City of Bloomington Utilities Engineering Department		FORCE MAIN MANIFOLD DEVICE	STANDARD DETAIL NUMBER 18
NO SCALE 03/13/02 J.Roosmann	Drawing File: J:\common\ENGINEER\DRAW\std18.DGN		

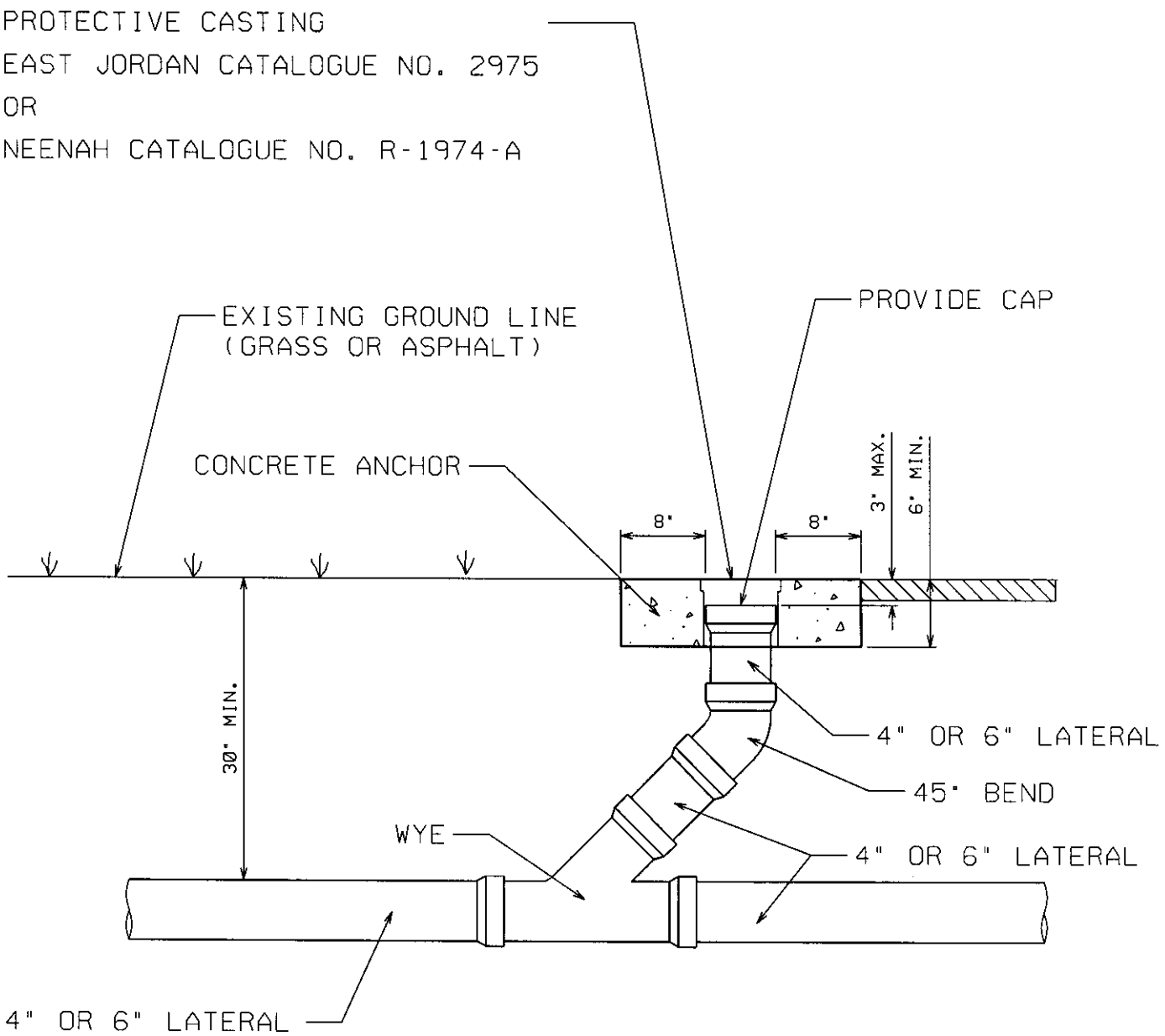

PROFILE

CITY OF BLOOMINGTON UTILITIES ENGINEERING DEPARTMENT NO SCALE 03/11/03 KAI SCHNIPPE DRAWING FILE: J:\COMMON\ENGINEER\DRAW\STD19.DGN	STANDARD SANITARY LATERAL CLEAN-OUT FOR 4" AND 6" PIPES	STANDARD DETAIL NUMBER 19

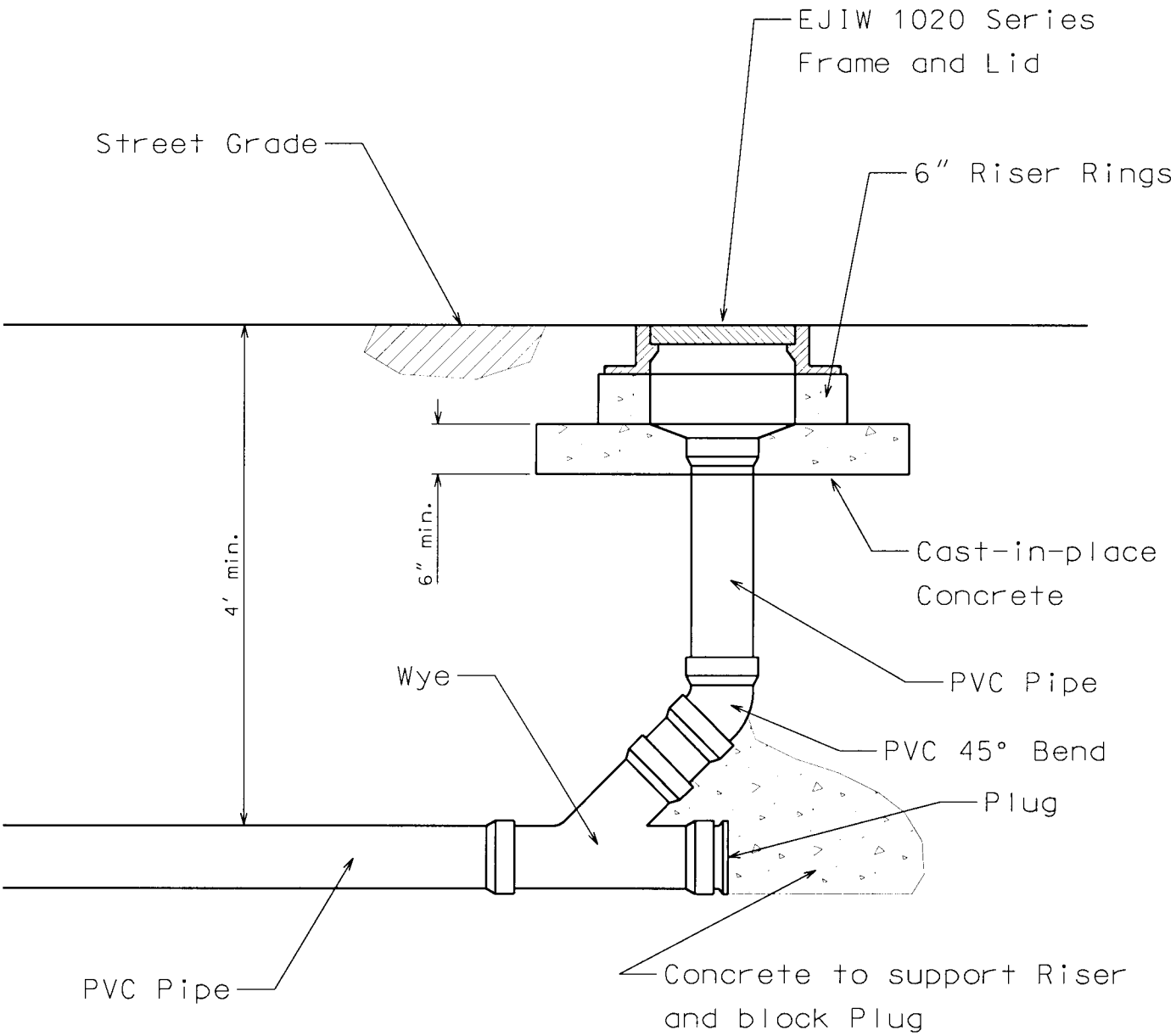

PROFILE

City of Bloomington Utilities Engineering Department		STANDARD SANITARY MAIN CLEAN-OUT FOR 8" PIPES AND LARGER	STANDARD DETAIL NUMBER 20
NO SCALE 05/28/02 J. Roosmann	Drawing File: J:\common\ENGINEER\DRAW\std20.DGN		

NOTIFICATION

The Contractor will be responsible for contacting the following offices or persons indicated with an (XX) on the list below at least **48 HOURS PRIOR** to beginning work (including delivery of materials). Street closures require **SEVEN DAYS PRIOR NOTIFICATION**.

		PHONE	FAX
____	**Mayor's Office**	349-3406	349-3455
____	**Council Office**	349-3409	349-3443
____	**Public Works**	349-3410	349-3443
____	**City Engineering**	349-3417	349-3446
____	**Utilities Dept.**	339-1444	331-5962
____	**City Police**	349-4477	349-3353
____	**IU Police**	855-4111	855-1496
____	**Monroe Sheriff**	349-2534	349-2828
____	**City Fire Dept.**	332-9763	
____	**Perry Twp. Fire**	334-7026	336-1166
____	**Blgtn Twp. Fire**	339-1115	339-1120
____	**Van Buren Fire**	825-9500	825-9700
____	**Ambulance**	336-9894	336-9204
____	**State Highway Dept.**	332-1411	332-3368
____	**Ellettville Sta. #8**	876-4819	876-8322
____	**IU President**	855-4613	855-9586
____	**Chuck Sheppard**	855-5013	855-8207
____	**Jeff Kaden**	855-7030	855-8207
____	**City Transit**	332-5688	332-3660
____	**IU Campus Bus**	855-8384	855-5984
____	**MCCSC Busses**	330-7719	330-7791
____	**Monroe County**	349-2555	349-2837
____	**Herald-Times**	332-4401	331-4383
____	**Daily Student**	855-0763	855-8009
____	**Cable TV**	332-9486	330-0107
____	**WTTS/WGTC**	332-3366	331-4570
____	**WBWB**	332-9292	336-7000
____	**WFIU**	855-1357	855-5600
____	**IUPPS***	1-800-382-5544	

The Indiana Underground Utilitiy Facilities Damage Prevention Act requires all persons excavating to call Indiana Underground Plant Protection Service (IUPPS) at least two full working days before digging and request location of all underground utilities in the work area. This is an Indiana law.

EMERGENCY:

PSI	812-336-6371				
Indiana Gas	1-800-666-2853	**after hours**	1-800-284-4295		
Indiana Bell	1-800-480-8088	**Dispatch**	812-556-3220	**Repair**	812-556-3000

Additional notices must be given SEVEN DAYS PRIOR to the day any street is closed or MINIMUM 24 HOURS PRIOR to the time any utility is temporarily out of service.