**PROPOSED:**

**PW2011-30**

# Vernal Pike and Crescent Road Intersection Improvements

**LETTING DATE: October 6, 2011**

**FOR:**

**THE CITY OF BLOOMINGTON**

**DEPARTMENT OF PUBLIC WORKS**

**POST OFFICE BOX 100**

**BLOOMINGTON, INDIANA**

SUBMITTED BY:

_____

Company or Firm Name

_____

Street and Number

_____

City or Town State Zip Code

# CONTENTS


| | |
|---|---|
| **SECTION I.** | **INVITATION TO BIDDERS** |
| **SECTION II.** | **INSTRUCTIONS TO BIDDERS** |
| **SECTION III.** | **BID FORM, UNIT PRICES, BIDDER AFFIDAVIT, SAMPLE BID BOND** |
| **SECTION IV.** | **AFFIRMATIVE ACTION PLAN REQUIREMENTS** |
| **SECTION V.** | **PREVAILING SCALE OF WAGES** |
| **SECTION VI.** | **STATE FORM NO. 96, NON-COLLUSION AFFIDAVIT** |
| **SECTION VII.** | **GENERAL CONDITIONS** |
| **SECTION VIII.** | **SPECIAL CONDITIONS** |
| **SECTION IX.** | **SAMPLE AGREEMENT, ATTACHMENT "A"** |
| **SECTION X.** | **SPECIFICATIONS** |

# SECTION I

# INVITATION TO BIDDERS

**INVITATION TO BIDDERS**

NOTICE IS HEREBY GIVEN THAT THE BOARD OF PUBLIC WORKS OF THE CITY OF BLOOMINGTON, INDIANA WILL RECEIVE SEALED BIDS FOR THE BELOW-DESCRIBED WORK AT THE LOCATION INDICATED.

**VERNAL PIKE/CRESCENT ROAD INTERSECTION IMPROVEMENT- Intersection of Vernal Pike and Crescent Road – realignment of Crescent Road and reconstruction of Vernal Pike.**

***This project shall include, but is not limited to the construction of new roadway alignment, reconstruction of existing roadway, new sidewalk, curbing, landscaping, and other work as required on the plans and specifications.***

The proposal and other data submitted will form the basis of the negotiation of a Lump Sum agreement for the work. Proposals are to be submitted in proper form, as described in the "Instructions to Bidders". Sealed proposals shall be received by the Office of the City Engineer at City Hall, 401 North Morton Street, Bloomington, Indiana, at or before 2:00 p.m. local time on October 6, 2011 Proposals will be opened and read by the Engineering and/or Public Works Staff at 2:00 p.m. in the McCloskey Room. Any proposals received after the designated time will be returned unopened. Proposals will be reviewed and the award may be made at the October 11 meeting of the Board of Public Works.

The Contract Documents may be obtained online at the following web site;

http://bloomington.in.gov/sections/viewSection.php?section_id=537

Each Bidder shall file with his or her sealed proposal: (1) a properly executed Non-collusion Affidavit as required by the laws of the State of Indiana; (2) a Questionnaire Form 96 of the State Board of Accounts; (3) a cashier's check or certified check drawn on an acceptable bank or a bid bond equal to five (5) percent of the total amount bid.

A pre-bid meeting will be held at City Hall at 401 North Morton Street, Bloomington, Indiana, in the McCloskey Conference Room on September 27, 2011 at 1:30 P.M. local time.

Each Bidder must ensure that to the greatest extent feasible, opportunities for training and employment should be given to lower income residents of the project area and purchases and/or contract for work in connection with the project should be awarded to small business concerns which are located in, or owned in substantial part, by persons residing in the area of the project.

Any Bidder/Quoter seeking to qyalify as a "local Indiana business" to gain preference in the bidding/quoting process pursuant to Indiana Code 5-22-15-20.9 must contact Danise Alano-Martin, Director, City of Bloomington Economic and Sustainable Development Department (812)349.3477; alanod@bloomington.in.gov to obtain information as to the qualification process, applicable rules, and required documentation. When submitting a bid/quote, the bidder/quoter must submit a statement claiming the preference. All information and documentation offered in support of the claim for qualification as a "local Indiana business" must be included in the bidder's/quoter's sealed bid/quote.

The City of Bloomington is an equal opportunity employer, and Bidders shall meet all requirements for equal employment under Title VII of the 1964 Civil Rights Act as amended and under the Bloomington Human Rights Ordinance, as amended.

Each Bidder for proposals over $10,000.00 shall submit and have approved by the City of Bloomington Contract Compliance Officer, Barbara McKinney, their written Affirmative Action Plan at least twenty-four (24) hours prior to the deadline for submission of proposals. Bids received that do not have an approved Affirmative Action Plan will be returned unopened. Each Bidder must insure that all employees and applicants for employment are not discriminated against because of race, religion, color, sex, national origin, ancestry or handicap. All the protected classes must be included in your Affirmative Action Plan for it to be acceptable. In addition to other requirements, your plan MUST include a workforce breakdown, an internal grievance procedure, a non-retaliation statement, designation of a person by name or position who is responsible for implementation of the Plan, applicability to both applicants and employees, recruitment of minorities, equal access to training programs, and an explanation of your method of communicating the operations of your affirmative action plan to employees and prospective applicants. Barbara McKinney, Contract Compliance Officer, may be contacted at (812) 349-3429, 9:00 a.m. to 1:00 p.m. Monday through Friday.

The Board of Public Works reserves the right to waive any informality and to accept or reject any or all proposals submitted.

Wage rates shall not be less than the prevailing wage rates as determined in accordance with IC 5-16-7.

The successful Bidder shall furnish performance and payment bonds for one-hundred (100) percent of the contract amount prior to the execution of the contract, and said bonds shall remain in effect for a period of one (1) year after final acceptance of the work.

Bids may be held by the Board of Public Works for a period not-to-exceed thirty (30) days from the date of the opening of bids for the purpose of reviewing the bids and investigating the qualifications of the bidder prior to awarding the contract.

**Board of Public Works, City of Bloomington, Indiana**

Charlotte Zietlow, President

# SECTION II

# INSTRUCTION TO BIDDERS

# INSTRUCTIONS TO BIDDERS

**1.00** **CONTRACT DOCUMENTS**: The "Invitation to Bid", "Instructions to Bidders"

"Bidders' Proposal", "Agreement", "General Conditions", "Special Conditions", "Specifications", and the "Contract Drawings" are the Contract Documents that will form the Contract.

**1.01** **INSPECTION OF THE SITE:** Bidders shall examine each of the Contract Documents, visit the site of the work and thoroughly and fully inform themselves of the construction hazards procedures, labor, conditions and factors, which could affect the prosecution and completion of the work. Such considerations shall include; the conditions of existing structures and facilities which may be affected by the proposed work, the procedure necessary for maintenance of uninterrupted operation of existing facilities, the availability and cost of labor and methods for transporting, handling, and storage of materials and equipment. All such factors shall be properly investigated and considered in the preparation of the Bidder's proposal. There will be no subsequent financial adjustment to any contract for lack of such prior information or its effects on the cost of the work.

**1.02** **OMISSIONS AND DISCREPANCIES:** Should Bidders find discrepancies in, or omissions from, the Contract Documents, or should they be in doubt as to their meaning, written notification should be made to the City Engineer. Interpretation of the proposed contract documents will be made only by written addendum. A copy of each addendum will be mailed or delivered to each person obtaining a set of contract documents from the City Engineer. The Owner will not be responsible for any other explanations or interpretations of the proposed contract documents.

**2.00** **PROPOSALS:** Pursuant to the "Invitation to Bidders" sealed proposals for performing the work shall be received by the Office of the City Engineer at City Hall, 401 North Morton Street, Bloomington, Indiana, at or before 2:00 p.m. local time on October 6, 2011. Proposals will be opened and read by the Engineering and/or Public Works Staff at 2:00 p.m. in the McCloskey Conference Room. Any proposals received after the designated time will be returned unopened. Proposals will be reviewed and the award will be made at the October 11, 2011 meeting of the Board of Public Works.

**2.01** **PROPOSAL FORM:** Each proposal shall be legibly written or printed in ink on the Proposal Form with Unit Prices provided. All addenda to the Contract Documents on which a Proposal is based, properly signed by the Bidder, shall accompany the Proposal when submitted. No alteration in any Proposal, or in the Proposal Form on which it is submitted, shall be made by any person after the Proposal has been submitted by the Bidder.

**2.02** **PROPOSAL SIGNATURES:** Each Bidder shall sign their proposal using their usual signature and giving their full business address. Bids by partnerships shall be signed with the partnership name followed by the signature and designation of one of the partners or other authorized representative. Bids by corporations shall be signed with the name of the corporation followed by the signature and designation of the president, secretary, or other person authorized to bind the corporation. The names of all persons signing should also be typed or printed below the signature. A bid by a person who affixes to their signature the word "president" or "secretary", "agent", or other designation without disclosing their principal may be held to be the bid of the individual signing. When requested by the Owner, satisfactory evidence of the authority of the person signing shall be furnished. No Bidder may submit more than one Proposal. Two Proposals under different names will not be accepted from one firm or association.

**2.03** **PROPOSAL SUBMISSION:** Each Proposal submitted shall be enclosed in a sealed envelope or wrapping, addressed to the Board of Public Works, Post Office Box 100, Bloomington, Indiana 47402, identified on the outside with the words "SEALED BID", and the name of the project and the project number, and filed with the City Engineer at their office in City Hall at 401 North Morton, Bloomington, Indiana.

**2.04** **INDIANA LEGAL REQUIREMENTS:** Each Bidder shall submit under oath with their bid a statement of their experience, proposed plan for performing the Work, equipment available to perform the work, and a financial statement. The statements shall be submitted on Questionnaire Form No. 96 of the Indiana State Board of Accounts. Each Proposal shall be accompanied by a properly executed Non-Collusion Affidavit as required by the laws of the State of Indiana.

**2.05** **PROPOSAL GUARANTEE:** Each Proposal shall be accompanied by a cashier's check or a certified check drawn on an acceptable bank, or an acceptable Bidder's bond in an amount of not less than five percent (5%) of the total bid. The proposal guarantee shall be made payable without condition to the City of Bloomington, Indiana, hereinafter referred to as "Owner", and the amount of said Proposal Guarantee may be retained by and forfeited to the Owner as liquidated damages if the Proposal covered thereby is accepted and a contract based thereon is awarded and the Bidder should fail to enter into a contract in the form prescribed, with legally responsible sureties, within fifteen (15) days after such award is made and confirmed by the Owner.

**2.06** **RETURN OF PROPOSAL GUARANTEE:** The Proposal Guarantee deposit of each unsuccessful Bidder will be returned when their proposal is rejected. The Proposal Guarantee deposit of the Bidder to whom the Contract is awarded will be returned when the successful Bidder executes a contract and files a satisfactory performance bond. The Proposal Guarantee deposit of the second and third lowest responsible Bidders may be retained for a period not to exceed ninety (90) days pending the execution of the Contract and bond by the successful Bidder.

**2.07** **WITHDRAWAL OF PROPOSAL:** No Contractor may withdraw their Proposal for a period of sixty (60) days after the date and hour set for the opening, and the Bidders submitting the three lowest bids may not withdraw their proposals for a period of one-hundred eighty (180) days after the opening date. A Bidder may withdraw their Proposal at any time prior to the expiration of the bid period during which Proposals may be submitted by a written request signed in the same manner and by the same person who signed the Proposal.

**2.08** **ACCEPTANCE AND REJECTION OF PROPOSALS:** The Owner reserves the right to accept the proposal submitted by the lowest responsible and responsive Bidder; to reject any or all proposals; and to waive irregularities or informalities in any proposal. Proposals received after the specified time of closing will be returned unopened. The acceptance of a proposal will be a notice in writing signed by a duly authorized representative of the Board of Public Works, and no other act shall constitute acceptance of a proposal. The acceptance of a proposal shall bind the successful Bidder to execute the Contract and to be responsible for liquidated damages as provided in Section 8.00.

**3.00** **QUALIFICATION OF BIDDERS:** Bidders shall submit satisfactory evidence that they have a practical knowledge of the particular work bid upon, and that they have the necessary financial resources to complete the proposed work. Each Bidder shall execute completely and accurately Questionnaire Form No. 96 of the Indiana State Board of Accounts and shall file the same with their Proposal. The information contained therein shall be used by the Owner to determine the ability, experience, and capital resources of the Bidder. In determining the Bidder's qualifications, the following factors will be considered: whether the Bidder (a) maintains a permanent place of business; (b) has adequate plant and equipment to do the work properly and expeditiously; (c) has the necessary financial resources to meet all obligations incident to the work; and (d) has appropriate technical experience. Each Bidder may be required to show that previous work performed has been handled in such a manner that there are no just and proper claims pending against such work. No bid will be accepted which is submitted by a Bidder who is engaged in any work which would impair their ability to finance the work covered by such bid or to provide suitable equipment for its proper prosecution and completion.

**4.00** **EXECUTION OF CONTRACT**: Any Bidder whose proposal shall be accepted will be required to appear at the office of the City Engineer in person, or, if a firm or corporation, a duly authorized representative shall so appear, to execute the Contract within 15 days after notice that the Contract has been awarded to them. Failure or neglect to do so shall constitute a breach of the agreement effected by the acceptance of the Proposal. The amount of the Proposal Guarantee accompanying the Proposal of such Bidder shall be retained by the City as liquidated damages for such breach. In the event that any Bidder whose

Proposal shall be accepted shall fail or refuse to execute the Contract as hereinbefore provided, the Board of Public Works may at their option, determine that such Bidder has abandoned the Contract and thereupon their Proposal and the acceptance thereof shall be null and void and the Owner shall be entitled to liquidated damages as above provided.

**4.01** **INSURANCE:** The Contractor will be required to carry insurance throughout the lifetime of the Contract, as provided in the General Conditions, the amount of insurance of the various types being not less than the amounts specified therein.

**4.02** **PAYMENTS:** Payment for all work performed under the proposed contract will be made in cash, or its equivalent, by the Owner within thirty (30) days after completion and final acceptance of the work covered by the contract. Partial estimates will be issued and paid as provided in the General Conditions.

**4.03** **TIME FOR BEGINNING AND COMPLETING THE WORK:** The Contractor shall start active and continuous work on the contract within 15 calendar days after the date of the notice to proceed and shall complete the work within 45 calender days. Calendar and work days shall be as defined in the General Conditions of these documents.

**4.04** **TAXES AND PERMITS:** Attention is directed to the requirements of the General Conditions regarding payments of taxes and obtaining permits. The Contractor shall be responsible for obtaining all necessary permits.

**4.05** **WORKER'S COMPENSATION:** Before any work is started, the Contractor shall obtain from the Indiana State Industrial Board and file with the Owner, a certificate as evidence of compliance with the provisions of the Indiana Worker's Compensation Act and the Indiana Worker's Occupational Diseases Act..

**4.06** **PERFORMANCE BOND:** The Bidder to whom a contract is awarded will be required to furnish a Performance Bond to the Owner in an amount equal to one-hundred (100) percent of the contract price. The bond shall be executed on the form included in the Contract Documents by a surety company authorized to do business in the State of Indiana and acceptable as surety to the Owner. Accompanying the bond shall be a "Power of Attorney" authorizing the attorney-in-fact to bind the surety company and certified to include the date of the bond. The surety on the Performance Bond cannot be released for one year, and the bond must require that the surety will not be discharged for:

A. modifications, omissions, or additions;

B. defects in the contract; or

C. defects in the bidding or awarding process.

**4.07** **PAYMENT BOND:** For all contracts a Payment Bond is required to insure payment of subcontractors, laborers, material suppliers, and persons furnishing services. The bond is executed by the Contractor to the state, approved by and for the benefit of the Owner, in an amount equal to the contract price. It is deposited with the board, and its surety cannot be released until one year after the board's final settlement with the Contractor. The bond must provide the same assurances as does the Performance Bond against conditions discharging the surety.

**4.08** **LOCAL MATERIALS:** Preference will be given to materials, products, supplies, and all other articles produced, manufactured, made, or grown in the State of Indiana.

**4.09** **NON-DISCRIMINATION IN EMPLOYMENT:** Each Bidder for proposals over $10,000.00 shall submit and have approved by the City of Bloomington Contract Compliance Officer, Barbara McKinney, their written Affirmative Action Plan at least twenty-four (24) hours prior to the deadline for submission of proposals. Bids received that do not have an approved Affirmative Action Plan will be returned unopened. Each Bidder must insure that all employees and applicants for employment are not discriminated against because of race, religion, color, sex, national origin, ancestry or handicap. All the protected classes must be included in your Affirmative Action Plan for it to be acceptable. In

addition to other requirements, your plan MUST include a workforce breakdown, an internal grievance procedure, a non-retaliation statement, designation of a person by name or position who is responsible for implementation of the Plan, applicability to both applicants and employees, recruitment of minorities, equal access to training programs, and an explanation of your method of communicating the operations of your affirmative action plan to employees and prospective applicants. Barbara McKinney, Contract Compliance Officer, may be contacted at (812) 349-3429, 9:00 a.m. to 1:00 p.m. Monday through Friday. The successful Bidder must comply with each section of its affirmative action plan and be prepared to comply in all respects with the contract provisions regarding non-discrimination which are included in the Employment Requirement and Wage Rate section. For contracts paid in whole or in part with federal funds, the Bidder must submit a signed statement as to whether he or she has previously performed work subject to Executive Order 11246. For contracts paid in whole or in part with federal funds, the successful Bidder must, if requested, submit a list of all subcontractors who will perform work on the project, and written and signed statements from authorized agents of the labor pools with which they will or may deal for employees on the work, together with supporting information to the effect that said labor pools' practices and policies are in conformity with Executive Order 11246, and that said labor pools will affirmatively cooperate in, or offer no hindrance to, recruitment, employment, and equal treatment of employees seeking employment, and performing work under the Contract, or a certification as to what efforts have been made to secure such statements when such agents or labor pools have failed or refused to furnish same, prior to the award of the Contract.

# SECTION III

## BID FORM
## UNIT PRICES
## BIDDER AFFIDAVIT
## SAMPLE BID BOND

# BID FORM

This Bid Summary Sheet shall be completed and submitted with all other Bid Documents.

The Lump sum cost to complete PW 2011-30, Vernal Pike and Crescent Road Intersection Improvements is:

_____($_____._____)

All work shall be completed within 45 calendar days from date of the Notice to Proceed.

Any and all Subcontractors performing work valued over $10,000 shall be listed below:

| SUBCONTRACTORS | ADDRESS | TYPE OF WORK |
|---|---|---|
| | | |

# UNIT PRICE SHEET

**FOR**

**PW 2011-30, Vernal Pike and Crescent Road Intersection Improvements**

**Additions/Deductions**

**PROVIDE PRICES FOR ALL CHECKED ITEMS**

| Item # | Description | Price Each | Unit |
|---|---|---|---|
| ☒ | Topsoil | _____ | TON |
| ☒ | Casting, Adjust to grade | _____ | EA |
| ☒ | Tree Removal, 6" - 10" | _____ | EA |
| ☐ | Tree Removal, 12" - 24" | _____ | EA |
| ☐ | Tree Removal, 26" and Larger | _____ | EA |
| ☒ | Saw-Cut Asphalt/Concrete | _____ | LF |
| ☒ | Common Excavation | _____ | CY |
| ☒ | Rock Excavation (per INDOT specification/quantity) | _____ | CY |
| ☒ | Curb, Concrete – 20” Bat. Curb w/8” exposed | _____ | LF |
| ☒ | Sidewalk, Concrete - 4” Thick 4000psi Concrete | _____ | SY |
| ☐ | Sidepath, Asphalt - (2” Base, 2” Surface) | _____ | SY |
| ☒ | Driveway, Class III (See Detail) | _____ | SY |
| ☐ | Type A Ramp w/ Cast Iron Tactile Plate | _____ | EA |
| ☒ | Type B Ramp w/ Cast Iron Tactile Plate | _____ | EA |
| ☐ | Type E Ramp w/ Cast Iron Tactile Plate | _____ | EA |
| ☐ | Type F Ramp w/ Cast Iron Tactile Plate | _____ | EA |
| ☐ | Type D Ramp w/ Cast Iron Tactile Plate | _____ | EA |
| ☒ | Type C Ramp w/ Cast Iron Tactile Plate | _____ | EA |
| ☐ | Retaining Wall (See Detail) | _____ | LF |
| ☒ | Pavement Repair (city specification) | _____ | SY |
| ☐ | Mulched Seeding | _____ | SY |
| ☒ | Sodding | _____ | SY |
| ☒ | Trees, Northern Red Oak, 2"-3" DBH | _____ | EA |
| ☒ | 12” N-12 Pipe | _____ | LF |
| ☐ | 12” C900 Pipe | _____ | LF |
| ☐ | 16” C900 Pipe | _____ | LF |
| ☐ | 18” C900 Pipe | _____ | LF |
| ☐ | 15” N-12 Pipe | _____ | LF |
| ☐ | 18” N-12 Pipe | _____ | LF |
| ☒ | Sidewalk Removal | _____ | SY |
| ☒ | Curb Removal | _____ | LFT |
| ☐ | Storm Inlet Type B with Casting | _____ | EA |
| ☒ | Storm Inlet Type E with Casting | _____ | EA |
| ☒ | Storm Inlet Type J with Casting | _____ | EA |

- **All prices shall reflect complete installation as shown on the plans or stated in the specifications, and be authorized by an approved change order prior to installation/deletion (All field orders must be issued in writing to be honored).**
- **Example: Sidewalk includes stone bedding, excavation; Asphalt Pathway includes stone, base, surface and backfill, excavation, etc.**

# Responsible Bidder Affidavit

Contractor and any subcontractor performing more than $150,000 worth of work on the project shall complete this *Responsible Bidder Affidavit* as required by Chapter 2.29 of the Bloomington Municipal Code. Contractor must submit this affidavit with its bid. Failure to comply with all submission requirements may result in a determination that the Contractor is not a responsible and responsive bidder.

---

The undersigned _____, as _____ and on behalf of
(Name) (Title)
_____ certifies the following:
(Contractor)

Contractor is compliant with all applicable laws pre-requisite to doing business in Indiana.

Yes [ ] No [ ]

Does Contractor have a Federal Employer Identification Number (EIN) (also known as a Federal Tax Identification Number)?

Yes [ ] No [ ]

Please list your Federal Employer Identification Number: _____

Alternatively, for sole proprietors, list your social security number: _____

Contractor is in compliance with Section 2000(e) of Chapter 21, Title 42 of the United States Code and Federal Executive Order Number 11375 (known as the Equal Opportunity Employer Provisions).

Yes [ ] No [ ]

Contractor has submitted an affirmative action plan as required under § 2.21.070(8) of the Bloomington Municipal Code.

Yes [ ] No [ ]

Contractor affirms that all of its workers who qualify as employees are covered under a current worker's compensation insurance policy, and that all workers who will be part of the project are properly classified as employees or independent contractors.

Yes [ ] No [ ]

Contractor will comply with Indiana Code § 5-16-7 et. seq., known as the Indiana Common Construction Wage Act.

Yes [ ] No [ ]

Contractor confirms that any of its employees designated as apprentices are properly registered with an apprenticeship and training program approved and registered with the United States Department of Labor, Bureau of Apprenticeship and Training.

Yes [ ] No [ ]

Contractor currently has a substance abuse testing policy in place.

Yes [ ] No [ ]

Please list any professional or trade license(s) required by law for any trade or specialty area required to complete work on the present project.

_____

_____

_____

_____

Has the Contractor, or any directors, officers, or managers employed by the Contractor, had any professional or trade license suspended or revoked within the last five (5) years?

Yes [ ] No [ ]

**Verification**

I certify that I am authorized to execute this affidavit on behalf of the Contractor set forth above, that I have personal knowledge of all the information set forth herein, and that all statements representations, and information contained in this affidavit are true and accurate.

_____
Signature of Authorized Officer

_____
Name of Authorized Officer

_____
Title

_____
Date

**BID BOND**

KNOW ALL MEN THESE PRESENTS, that we, the undersigned, _____ _____as Principal, and _____ _____as Surety, are hereby held and firmly bound unto _____as OWNER in the penal sum of _____for the payment of which, well and truly to be made, we hereby jointly and severally bind ourselves, successors and assigns.

Signed, this _____ day of _____, 20_____.

The condition of the above obligation is such that whereas the Principal has submitted to _____ a certain Document1, attached hereto and hereby made a part hereof to enter into a contract in writing, for the _____

_____

NOW, THEREFORE,

1. If said BID shall be rejected, or
2. If said BID shall be accepted and the Principal shall execute and deliver a contract in the Form of Contract attachment hereto (properly completed in accordance with said BID) and shall furnish a BOND for faithful performance of said contract, and for the payment of all persons performing labor furnishing materials in connection therewith, and shall in all other respects perform the agreement created by the acceptance of said BID, then this obligation shall void, otherwise the same shall remain in force and effect; it being expressly understood and agreed that the liability of the Surety for any

and all claims hereunder shall, in no event, exceed the penal amount of this obligation as herein stated.

The Surety, for value received, hereby stipulates and agrees that the obligations of said Surety and its BOND shall be in no way impaired or affected by any extension of the time within which the OWNER may accept such BID; and said Surety does hereby waive notice of any such extension.

IN WITNESS WHEREOF, the Principal and the Surety have hereto set their hands and seals, and such of them as are corporations have caused their corporate seals to be hereto affixed and these presents to be signed by their proper officers, the day and year first set forth above.

_____(L.S.)
Principal

_____
Surety

By: _____

# SECTION IV

# AFFIRMATIVE ACTION PLAN REQUIREMENTS

**City of Bloomington**
**Legal Department**

2011

RE: Affirmative Action and Living Wage Ordinance

To Prospective Bidders:

Affirmative Action: All bidders with the City of Bloomington for projects in excess of $10,000.00 must submit an affirmative action plan to my office. This plan must insure that applicants are employed and that employees are treated in a manner that provides equal employment opportunity and tends to eliminate inequality based upon race, religion, color, sex, national origin, ancestry or disability.

In addition, some City bidders are covered by the City's Living Wage Ordinance. The purpose of this letter is to explain what is required to be included in your plan for it to be acceptable under the Contract Compliance Regulations of the City of Bloomington and to make sure you are aware of the City's Living Wage Ordinance.

Even if your company already has a plan on file with the City, you must check with me to make sure that it complies with our current requirements. If you already have a plan, but it does not cover all of the City's current requirements, you may submit a separate supplement with your plan to fill any gaps.

You must submit your written affirmative action plan (or supplement) to me AT LEAST TWENTY- FOUR HOURS BEFORE THE BID DEADLINE. You must submit your plan to me separately from your bid. The twenty-four hours will give me sufficient time to review your and the other bidders' plans. I advise you to submit your affirmative action plan to me earlier, if possible, so that you and I will have time to work out any problems that may be in your plan. BIDDERS WHO FAIL TO SUBMIT ACCEPTABLE PLANS BY THE DEADLINE ARE SUBJECT TO DISQUALIFICATION. NON-DISCRIMINATION CLAUSES WILL BE INCLUDED IN ALL CONTRACTS AWARDED.

I strongly advise you to confirm with me that I have received your plan and that it meets our requirements well before the bid deadline. We will make every effort to work with you to clear up problems. But it remains your responsibility to confirm that I received your plan and that it complies with our requirements. If you fail to confirm that I received and approved your plan, you risk losing your eligibility to bid. We will be glad to provide a receipt upon request. Please let us know if you want a receipt when you submit your plan.

You must insure that all the protected classes listed above are included in your plan. In addition

401 North Morton Street – Bloomington, IN 47404 Phone: (812) 349.3426 - Fax: (812) 349.3441
www.bloomington.in.gov
email: mckinneb@bloomington.in.gov

to other requirements, your plan MUST include a workforce breakdown, an internal grievance procedure, a non-retaliation statement, designation of a person by name or position who is responsible for implementing the plan, applicability to both applicants and employees, recruitment of minorities, equal access to training programs, and an explanation of your methods of communicating the operations of your affirmative action plan to your employees and prospective applicants.

Accompanying this letter you will find the following materials:

(1) A workforce breakdown form. You MUST submit a workforce breakdown (sometimes called a "utilization report") with your Affirmative Action plan. This form is provided for your convenience. If you already have a current form you have completed for another jurisdiction that includes the same type of information, you may substitute a copy of that form instead of using our form. YOUR WORKFORCE BREAKDOWN FIGURES MUST BE UPDATED EVERY SIX MONTHS. Even if you already have an acceptable affirmative action plan on file with my office, you should submit a new workforce breakdown each time you bid for a City Contract, to be sure we have up-to-date figures.

(2) An affirmative action plan checklist. I will use this checklist to review your affirmative action plan. If you compare your plan with this list, you should be able to tell whether your plan fulfills the City's requirements. If you omit any of the elements on the checklist, YOUR PLAN WILL NOT BE APPROVED.

(3) A sample affirmative action plan. This may be useful if your company has never designed an affirmative action plan before. Feel free to adopt this plan as your own or to amend it to meet your needs.

Additional materials, such as the City of Bloomington's Contract Compliance Regulations, are available from my office upon request.

Living Wage: Also, please be aware that you may be required to comply with the Bloomington Living Wage Ordinance. Whether the LWO applies to your project depends upon the size and type of your project and the number of people you employ. If you have questions about the applicability of the LWO, click on the LWO flow chart at www.bloomington.in.gov/livingwage or call me. For 2010, the living wage is $11.25 an hour.

If you have any questions, contact me at (812) 349-3429 or e-mail me at mckinneb@ bloomington.in.gov. My office hours are Monday through Friday, 8-5. Thank you.

Barbara E. McKinney, Human Rights Director/Contract Compliance Officer

**BLOOMINGTON HUMAN RIGHTS COMMISSION**
**Model Affirmative Action Plan**

## Policy Statement

_____, Inc., declares its policy to provide equal opportunity in employment, training and advancement, and to administer its employment practices without regard to race, color, religion, sex, national origin, ancestry or disability. Our policy of nondiscrimination will prevail throughout every aspect of our employment practices, including recruitment, hiring, training and all other terms and conditions of employment. We shall implement an affirmative action plan to make it widely known that equal employment opportunities are available on the basis of individual merit. We shall survey and analyze our employment workforce annually to determine what steps, if any, are needed to conform effectively with this equal employment policy.

## Responsible Officer

Mr. or Ms. _____ (or the _____ officer) is the equal employment opportunity officer for our company and is responsible for implementing this affirmative action policy.

## Publication of Policy

Our employees will be made aware of our commitment to affirmative action through the following procedures:

- posting notices on employee bulletin boards,
- including our policy statement and plan in our personnel manual,
- regularly sending out notice of our policy in paycheck envelopes, and
- training supervisors to recognize discriminatory practices.

We will make potential employees aware of our policy through the following

procedures:

- including the words "Equal Opportunity Employer" in all of our advertisements and notices for job openings,
- notifying employment agencies about our commitment, and
- sending notice of our policy to unions.

## Implementing Our Policy

Our affirmative action plan will be implemented by widening our recruitment sources. We shall advertise in newspapers and other media that reach people in protected classes. We shall send job notices to schools with large percentages of students in the protected classes and to local groups that serve these classes.

We shall examine our hiring practices periodically to insure that we consider only job-related qualifications in filling our positions. We shall discard irrelevant educational requirements and unnecessary physical requirements. We shall retain only job-related questions on our employment application.

We shall keep affirmative action information on each applicant, but separate from his or her application. We shall keep records on our hiring decisions to evaluate the success of our affirmative action measures. We shall decide placement, duties, benefits, wages, training prospects, promotions, layoffs and terminations without regard to race, sex, religion, color, national origin, ancestry or disability.

## Grievance Procedure

If an employee feels he or she has been discriminated against on the basis of race, sex, religion, color, national origin, ancestry or disability he or she may bring the complaint to his or her immediate supervisor. If the complaint is not resolved readily at that level, he or she may submit it to _____ _____ (personnel officer, corporate president, other) who will make a final decision on its validity. This grievance process does not preclude his or her complaining to local, state or federal civil

rights agencies. We will not retaliate against an employee or applicant for voicing a grievance or for filing a complaint with the appropriate agency.

Our current workforce breakdown is shown on the attached form.

_____ _____

Corporate President Date

# SECTION V

# PREVAILING SCALE OF WAGES

General Decision Number: IN100006 09/16/2011 IN6

Superseded General Decision Number: IN20080006

State: Indiana

Construction Types: Heavy and Highway

Counties: Adams, Allen, Bartholomew, Benton, Blackford, Boone, Brown, Carroll, Cass, Clark, Clay, Clinton, Crawford, Daviess, Dearborn, Decatur, DeKalb, Delaware, Dubois, Elkhart, Fayette, Floyd, Fountain, Franklin, Fulton, Gibson, Grant, Greene, Hamilton, Hancock, Harrison, Hendricks, Henry, Howard, Huntington, Jackson, Jasper, Jay, Jefferson, Jennings, Johnson, Knox, Kosciusko, Lagrange, Lawrence, Madison, Marion, Marshall, Martin, Miami, Monroe, Montgomery, Morgan, Newton, Noble, Ohio, Orange, Owen, Parke, Perry, Pike, Posey, Pulaski, Putnam, Randolph, Ripley, Rush, Scott, Shelby, Spencer, Starke, Steuben, Sullivan, Switzerland, Tippecanoe, Tipton, Union, Vanderburgh, Vermillion, Vigo, Wabash, Warren, Warrick, Washington, Wayne, Wells, White and Whitley Counties in Indiana.

* EXCEPT LAKE, LAPORTE, PORTER AND ST. JOSEPH COUNTIES HEAVY AND HIGHWAY CONSTRUCTION PROJECTS

| Modification Number | Publication Date |
|---|---|
| 0 | 03/12/2010 |
| 1 | 03/19/2010 |
| 2 | 04/02/2010 |
| 3 | 04/09/2010 |
| 4 | 04/16/2010 |
| 5 | 04/23/2010 |
| 6 | 04/30/2010 |
| 7 | 05/07/2010 |
| 8 | 05/14/2010 |
| 9 | 06/04/2010 |
| 10 | 06/18/2010 |
| 11 | 07/02/2010 |
| 12 | 07/09/2010 |
| 13 | 07/23/2010 |
| 14 | 08/13/2010 |
| 15 | 08/27/2010 |
| 16 | 09/10/2010 |
| 17 | 10/01/2010 |
| 18 | 10/08/2010 |
| 19 | 10/22/2010 |
| 20 | 10/29/2010 |
| 21 | 12/03/2010 |
| 22 | 12/10/2010 |
| 23 | 12/17/2010 |
| 24 | 12/24/2010 |
| 25 | 12/31/2010 |
| 26 | 01/14/2011 |
| 27 | 01/21/2011 |
| 28 | 01/28/2011 |
| 29 | 02/11/2011 |
| 30 | 02/18/2011 |
| 31 | 03/25/2011 |
| 32 | 04/08/2011 |
| 33 | 04/15/2011 |
| 34 | 04/29/2011 |
| 35 | 05/13/2011 |

| | |
|---|---|
| 36 | 05/20/2011 |
| 37 | 05/27/2011 |
| 38 | 06/03/2011 |
| 39 | 06/17/2011 |
| 40 | 07/01/2011 |
| 41 | 07/08/2011 |
| 42 | 07/22/2011 |
| 43 | 07/29/2011 |
| 44 | 08/05/2011 |
| 45 | 08/12/2011 |
| 46 | 08/19/2011 |
| 47 | 08/26/2011 |
| 48 | 09/02/2011 |
| 49 | 09/16/2011 |

* ASBE0008-004 07/01/2011

DEARBORN, FAYETTE, FRANKLIN, OHIO, RIPLEY SWITZERLAND AND UNION COUNTIES

| | Rates | Fringes |
|---|---|---|
| Asbestos Workers/Insulator (Includes application of all insulating materials, protective coverings, coatings & finishings to all types of mechanical systems)..... | $ 26.98 | 11.89 |
| HAZARDOUS MATERIAL HANDLER (Includes preparation, wettings, stripping, removal, scrapping, vacuuming, bagging & disposing of all insulation materials, whether they contain asbestos or not, from mechanical systems)..... | $ 23.75 | 11.20 |

---

ASBE0018-004 02/01/2011

BARTHOLOMEW, BENTON, BOONE, CARROLL, CLINTON, DELAWARE, FOUNTAIN, HAMILTON, HANCOCK, HENDRICKS, HOWARD, JOHNSON, MADISON, MARION, MONROE, MONTGOMERY, MORGAN, SHELBY, TIPPECANOE, TIPTON, AND WARREN COUNTIES:

| | Rates | Fringes |
|---|---|---|
| ASBESTOS WORKER/HEAT & FROST INSULATOR (includes application of all insulating materials, protective coverings, coatings and finishings to all types of mechanical systems)..... | $ 31.98 | 13.85 |
| HAZARDOUS MATERIAL HANDLER (includes preparation, wettings, stripping, removal, scrapping, vacuuming, bagging & disposing of all insulation materials, whether they contain asbestos or not, from mechanical systems)..... | $ 18.75 | 9.70 |

---

ASBE0037-004 04/01/2011

DAVIESS, DUBOIS, GIBSON, KNOX, MARTIN, PIKE, POSEY, SPENCER, SULLIVAN, VANDERBURGH AND WARRICK COUNTIES

| | Rates | Fringes |
|---|---|---|
| ASBESTOS WORKER/HEAT & FROST INSULATOR (includes application of all insulating materials protective coverings, coatings an finishes to all types of mechanical systems. Also the application of firestopping, material openings and penetrations in walls, floors, ceilings, curtain walls and all lead abatement.) | $ 28.56 | 13.60 |
| HAZARDOUS MATERIAL HANDLER (Includes preparation, wetting, stripping, removal, scrapping, vacuuming, bagging and disposing of all insulation materials, whether they contain asbestos or not, from mechanical systems) | $ 19.35 | 10.35 |

---

ASBE0041-002 07/01/2011

ADAMS, ALLEN, BLACKFORD, DE KALB, GRANT, HUNTINGTON, JAY, MIAMI, NOBLE, STEUBEN, WABASH, WELLS AND WHITLEY COUNTIES:

| | Rates | Fringes |
|---|---|---|
| ASBESTOS WORKER/HEAT & FROST INSULATOR (includes application of all insulating materials, protective coverings, coatings and finishings to all types of mechanical systems) | $ 29.98 | 12.56 |
| HAZARDOUS MATERIAL HANDLER (includes preparation, wettings, stripping, removal, scrapping, vaccuming, bagging & disposing of all insulation materials, whether they contain asbestos or not, from mechanical systems) | $ 18.70 | 9.70 |

---

ASBE0051-003 10/01/2010

CLARKE, FLOYD, HARRISON and JENNINGS COUNTIES

| | Rates | Fringes |
|---|---|---|
| ASBESTOS WORKER/HEAT & FROST INSULATOR (Includes application of all insulating materials, protective coverings, coatings and | | |

finishings to all types of
mechanical systems).....$ 24.41 10.43
HAZARDOUS MATERIAL HANDLER
(includes preparation,
wettings, stripping, removal,
scrapping, vaccuming, bagging
& disposing of all insulation
materials, whether they
contain asbestos or not, from
mechanical systems).....$ 19.35 10.35

---

ASBE0079-002 07/01/2008

RANDOLPH AND WAYNE COUNTIES

| | Rates | Fringes |
|---|---|---|
| ASBESTOS WORKER/HEAT & FROST INSULATOR (Includes application of all insulating materials, protective coverings, coatings & finishings to all types of mechanical systems) | $ 22.25 | 8.89 |
| HAZARDOUS MATERIAL HANDLER (Includes preparation, wetting, stripping, removal, scrapping, vacuuming, bagging & disposing of all insulation materials, whether they contain asbestos or not, from mechanical systems)) | $ 22.60 | 9.40 |

---

* BRIN0003-001 06/01/2011

INDIANAPOLIS
BOONE, HANCOCK, HENDRICKS, JOHNSON, MARION, MONTGOMERY, MORGAN
and SHELBY COUNTIES

| | Rates | Fringes |
|---|---|---|
| Bricklayer, Stone Mason, Pointer, Caulking | $ 29.75 | 10.23 |
| TERRAZZO FINISHER | $ 19.80 | 5.72 |
| TERRAZZO WORKER/SETTER | $ 29.50 | 9.33 |
| Tile & Marble Finisher | $ 18.92 | 5.70 |
| Tile, Marble Setter | $ 28.90 | 9.23 |

---

BRIN0004-004 06/01/2011

FORT WAYNE
ADAMS, ALLEN, DEKALB, HUNTINGTON, NOBLE, STEUBEN, WELLS AND
WHITLEY COUNTIES:

| | Rates | Fringes |
|---|---|---|
| BRICKLAYER (STONE MASON, MARBLE MASONS, POINTER, CLEANER, AND CAULKER) | $ 28.06 | 11.88 |
| Terrazzo Grinder Finisher | $ 22.76 | 8.45 |
| Terrazzo Worker Mechanic | $ 27.52 | 10.10 |
| Tile Setter & Marble Mason | | |

| | | |
|---|---|---|
| Mechanic | $ 24.61 | 10.10 |
| Tile, Marble & Terrazzo Finisher | $ 19.59 | 8.45 |

---

BRIN0004-009 06/01/2011

BARTHOLOMEW, BROWN, DEARBORN, DECATUR, JENNINGS, MONROE, OHIO, OWENS, RIPLEY and SWITZERLAND COUNTIES

| | Rates | Fringes |
|---|---|---|
| Bricklayer, Stonemason | $ 27.20 | 9.76 |
| TERRAZZO FINISHER | $ 18.92 | 5.70 |
| TERRAZZO WORKER/SETTER | $ 29.50 | 9.33 |
| Tile & Marble Finisher | $ 19.80 | 5.72 |
| Tile, Marble Setter | $ 28.90 | 9.23 |

---

BRIN0004-010 06/01/2011

| | Rates | Fringes |
|---|---|---|
| BRICKLAYER | | |
| CLARK, FLOYD, & HARRISON COUNTIES | | |
| BRICKLAYERS, STONEMASONS AND CEMENT MASONS | $ 24.11 | 10.07 |
| TILE, MARBLE AND TERRAZZO WORKERS | $ 22.64 | 6.05 |
| POSEY, VANDERBURGH AND WARRICK COUNTIES | | |
| BRICKLAYERS, MASONS | $ 28.47 | 12.78 |
| TILE, MARBLE AND TERRAZZO WORKERS | $ 23.72 | 8.71 |

---

BRIN0004-015 06/01/2011

TERRE HAUTE
CLAY, DAVIESS, GIBSON, GREENE, KNOX, MARTIN, PARKE, PIKE, PUTNAM, SULLIVAN, VERMILLION and VIGO COUNTIES

| | Rates | Fringes |
|---|---|---|
| BRICKLAYER | | |
| BRICKLAYERS, STONE MASONS and POINTER/ CLEANER/CAULKER | $ 29.40 | 10.95 |
| CEMENT MASON (GREENE and SULLIVAN COUNTIES) | $ 27.05 | 10.95 |
| CEMENT MASON (REMAINING COUNTIES) | $ 27.30 | 10.85 |
| TERRAZZO FINISHERS | $ 18.92 | 5.70 |
| TERRAZZO WORKER | $ 29.50 | 9.33 |
| TILE AND MARBLE FINISHERS | $ 19.80 | 5.72 |
| TILE LAYER, MARBLE MASON, MOSAIC WORKER | $ 28.90 | 9.23 |

---

BRIN0004-016 06/01/2011

MUNCIE
BLACKFORD, DELAWARE, FAYETTE, FRANKLIN, HAMILTON, HENRY, JAY, MADISON, RANDOLPH, RUSH, TIPTON, UNION and WAYNE COUNTIES

| | Rates | Fringes |
|---|---|---|
| Bricklayer, Stonemason, Pointer, Caulker & Cleaner | $ 28.05 | 12.14 |
| TERRAZZO FINISHER | $ 18.92 | 5.70 |
| TERRAZZO WORKER/SETTER | $ 29.50 | 9.33 |
| Tile & Marble Finisher | $ 19.80 | 5.72 |
| Tile & Marble Setter; Mosaic Worker | $ 28.90 | 9.23 |

---

BRIN0006-001 06/01/2011

MERRILLVILLE
JASPER, NEWTON & STARKE COUNTIES

| | Rates | Fringes |
|---|---|---|
| Bricklayer, Stone Mason, Marble Mason, Terrazzo Worker, Tile Layer, Pointer, Cle | $ 35.35 | 18.80 |
| Tile, Marble & Terrazzo Worker | $ 35.35 | 18.80 |

---

BRIN0011-001 06/01/2011

LAFAYETTE
BENTON, CARROLL, CLINTON, FOUNTAIN, TIPPECANOE, WARREN and WHITE COUNTIES

| | Rates | Fringes |
|---|---|---|
| Bricklayer, Stonemason, Pointer, Caulker & Cleaner | $ 27.00 | 12.79 |
| TERRAZZO FINISHER | $ 18.92 | 5.70 |
| TERRAZZO WORKER/SETTER | $ 29.50 | 9.33 |
| Tile & Marble Finisher | $ 19.80 | 5.72 |
| Tile & Marble Setter; Mosaic Worker | $ 28.90 | 9.23 |

---

BRIN0018-002 06/01/2011

CASS, ELKHART, FULTON, GRANT, HOWARD, KOSCUISKO, LAGRANGE, MARSHALL, MIAMI, PULASKI, WABASH

| | Rates | Fringes |
|---|---|---|
| Bricklayer, Caulker, Cleaner, Pointer | $ 27.61 | 11.94 |

---

CARP0107-010 04/01/2010

ADAMS, CASS, ELKHART, FULTON, GRANT, HOWARD, HUNTINGTON, KOSCIUSKO, MARSHALL, MIAMI, TIPTON, WABASH AND WELLS COUNTIES:

| | Rates | Fringes |
|---|---|---|
| CARPENTER | $ 24.53 | 12.94 |

---

CARP0108-002 04/01/2010

BENTON, CARROLL, CLINTON, PULASKI, TIPPECANOE, WARREN AND WHITE COUNTIES

| | Rates | Fringes |
|---|---|---|
| CARPENTER | $ 24.67 | 12.56 |

---

CARP0109-002 04/01/2010

DAVIESS, GIBSON, GREENE, KNOX, LAWRENCE, MARTIN, ORANGE AND SULLIVAN COUNTIES:

| | Rates | Fringes |
|---|---|---|
| CARPENTER | $ 23.54 | 14.38 |

---

CARP0111-002 04/01/2010

BOONE, CLAY, FOUNTAIN, HAMILTON, HANCOCK, HENDRICKS, JOHNSON (Townships of Clark, Camp Atterbury north of Hospital Road, Pleasant, White River), MONROE, MONTGOMERY, MORGAN, OWEN, PARKE, PUTNAM, VERMILLION AND VIGO COUNTIES

| | Rates | Fringes |
|---|---|---|
| CARPENTER | $ 24.12 | 13.90 |

---

CARP0111-003 04/01/2010

BARTHOLOMEW, BROWN,(Camp Atterbury south of Hospital Road), DECATUR, FRANKLIN, JOHNSON (Townships of Blue River, Franklin, Hensley, Needham, Nineveh, Union) , RUSH AND SHELBY COUNTIES

| | Rates | Fringes |
|---|---|---|
| CARPENTER | $ 23.68 | 13.90 |

---

CARP0111-004 04/01/2010

MARION COUNTY

| | Rates | Fringes |
|---|---|---|
| CARPENTER | $ 25.23 | 13.90 |

---

CARP0111-005 04/01/2010

BLACKFORD, DELAWARE, FAYETTE, HENRY, JAY, MADISON, RANDOLPH, UNION AND WAYNE COUNTIES

| | Rates | Fringes |
|---|---|---|
| CARPENTER | $ 23.98 | 13.90 |

---

CARP0232-003 04/01/2010

ALLEN, DEKALB, LAGRANGE, NOBLE, STEUBEN and WHITLEY COUNTIES

| | Rates | Fringes |
|---|---|---|

CARPENTER.....$ 24.21 13.11

---

CARP0999-001 04/01/2009

JASPER, NEWTON AND STARKE COUNTIES:

| | Rates | Fringes |
|---|---|---|
| CARPENTER | $ 33.43 | 19.99 |

---

CARP0999-002 04/01/2010

CRAWFORD, DUBOIS, PERRY, PIKE, POSEY, SPENCER, VANDERBURGH AND WARRICK COUNTIES:

| | Rates | Fringes |
|---|---|---|
| CARPENTER | $ 23.21 | 14.31 |

---

CARP0999-004 04/01/2010

DEARBORN, JACKSON, JENNINGS, OHIO, RIPLEY AND SWITZERLAND COUNTIES

| | Rates | Fringes |
|---|---|---|
| CARPENTER | $ 23.73 | 13.79 |

---

CARP0999-005 04/01/2010

CLARK, FLOYD, HARRISON, JEFFERSON,SCOTT AND WASHINGTON COUNTIES

| | Rates | Fringes |
|---|---|---|
| CARPENTER | $ 23.08 | 14.44 |

---

CARP1031-012 06/01/2011

CLARK, FLOYD, HARRISION AND WASHINGTON COUNTIES

| | Rates | Fringes |
|---|---|---|
| MILLWRIGHT | $ 24.65 | 17.57 |

---

ELEC0016-003 04/01/2011

CRAWFORD, DAVIESS, DUBOIS, GIBSON, LAWRENCE, MARTIN, ORANGE, PERRY, PIKE, POSEY, SPENCER, VANDERBURGH, WARRICK

| | Rates | Fringes |
|---|---|---|
| ELECTRICIAN | $ 32.94 | 13.63 |

---

ELEC0071-006 01/03/2011

DEARBORN, OHIO, and SWTIZERLAND COUNTIES

| | Rates | Fringes |
|---|---|---|
| Line Construction: | | |

| | | |
|---|---|---|
| Equipment Operator..... | $ 28.13 | 11.25 |
| Groundman..... | $ 20.31 | 11.25 |
| Lineman & Cable Splicers.... | $ 31.25 | 11.25 |

---

ELEC0153-003 06/06/2011

ELKHART, KOSCIUSKO and MARSHALL COUNTIES

| | Rates | Fringes |
|---|---|---|
| Communication Technician..... | $ 24.49 | 11.19 |
| ELECTRICIAN..... | $ 30.00 | 17.12 |

Includes the installation, operation, inspection, modification, maintenance and repair of systems used for the transmission and reception of signals of any nature, for any purpose, including but not limited to , sound and voice transmission/transference systems, communication systems that transmit or receive information and /or control systems, television and video systems, micre-processor controlled fire alarm systems, and security systems and the performance of any task directly related to such installation or service. The scope of work shall exclude the installation of electrical power wiring and the installation of conduit raceways exceeding fifteen (15) feet in length.

---

ELEC0212-009 05/31/2011

DEARBORN, OHIO, and SWITZERLAND COUNTIES

| | Rates | Fringes |
|---|---|---|
| ELECTRICIAN..... | $ 26.11 | 14.94 |

---

ELEC0305-003 10/01/2009

ADAMS, ALLEN, DE KALB, HUNTINGTON, NOBLE, STEUBEN, WELLS, and WHITLEY COUNTIES

| | Rates | Fringes |
|---|---|---|
| ELECTRICIAN..... | $ 28.98 | 10.67 |

---

ELEC0369-005 05/27/2009

CLARK, FLOYD, and HARRISON COUNTIES

| | Rates | Fringes |
|---|---|---|
| ELECTRICIAN..... | $ 28.30 | 12.55 |
| Line Construction: | | |
| Groundman..... | $ 13.83 | 6.35 |
| Lineman; Equipment Operator. | $ 22.25 | 6.35 |

---

ELEC0481-003 01/01/2009

BARTHOLOMEW, BOONE, DECATUR, HAMILTON, HANCOCK, HENDRICKS, JENNINGS, JOHNSON, MADISON, MARION, MONTGOMERY, MORGAN, PUTNAM, RIPLEY, RUSH AND SHELBY COUNTIES

| | Rates | Fringes |
|---|---|---|

ELECTRICIAN.....$ 31.45 14.74

---

ELEC0668-002 06/01/2011

BENTON, CARROLL, CASS, FULTON, TIPPECANOE and WHITE COUNTIES

| | Rates | Fringes |
|---|---|---|
| ELECTRICIAN | $ 30.83 | 14.41 |

FOOTNOTE: a. PAID HOLIDAYS: New Years Day, Memorial Day, July 4th, Labor Day, Veterans Day Thanksgiving Day and Christmas Day

---

ELEC0702-003 06/28/2010

DUBOIS, GIBSON, PERRY, PIKE, POSEY, SPENCER AND VANDERBURGH COUNTIES

| | Rates | Fringes |
|---|---|---|
| Line Construction: | | |
| GROUNDMAN, Class A | $ 23.34 | 11.65 |
| GROUNDMAN-EQUIPMENT OPERATOR (All other equipment) | $ 29.50 | 13.42 |
| HEAVY-EQUIPMENT OPERATOR (All crawler type equipment D-4 and larger) | $ 33.59 | 14.59 |
| LINEMAN | $ 40.85 | 16.68 |

---

ELEC0725-003 01/01/2011

CLAY, GREENE, OWEN, PARKE, SULLIVAN AND VIGO COUNTIES

| | Rates | Fringes |
|---|---|---|
| ELECTRICIAN | $ 33.15 | 23%+$5.64 |

---

ELEC0725-007 09/01/1999

CLAY, GREENE, OWEN, PARKE, SULLIVAN AND VIGO COUNTIES

| | Rates | Fringes |
|---|---|---|
| Communication Technician | $ 18.70 | 3.80+3% |

Includes the installation, operation, inspection, maintenance, repair and service of radio, television, recording, voice sound and vision production and reproduction apparatus, equipment and appliances used for domestic, commercial, education, entertainment and private telephone systems.

---

ELEC0855-001 01/01/2011

FAYETTE, FRANKLIN, HENRY, RANDOLPH, UNION AND WAYNE COUNTIES

| | Rates | Fringes |
|---|---|---|
| ELECTRICIAN | $ 32.69 | 5.70+17.5% |

---

ELEC0873-002 03/01/2011

CLINTON, GRANT, HOWARD, MIAMI, TIPTON AND WABASH COUNTIES:

| | Rates | Fringes |
|---|---|---|
| ELECTRICIAN | $ 31.57 | 11.51 |

---

ELEC1393-001 12/06/2010

REMAINING COUNTIES

| | Rates | Fringes |
|---|---|---|
| Line Construction: | | |
| EQUIPMENT OPERATOR (Backhoes over 1/2 yard bucket capacity, cranes rated at 15 ton or more capacity) 95% J.L. rate | $ 32.00 | 4.75+27.75% |
| GROUNDMAN TRUCK DRIVER | $ 21.51 | 4.75+27.75% |
| GROUNDMAN, EQUIPMENT OPERATOR: Diggers, 5th wheel type trucks, crawler type, D-4 and smaller, bucket trucks and live boom type line trucks | $ 24.67 | 4.75+27.75% |
| GROUNDMAN | $ 18.69 | 4.75+27.75% |
| LINEMAN | $ 32.00 | 4.75+27.75% |

---

ELEC1393-002 12/06/2010

NEWTON COUNTY

| | Rates | Fringes |
|---|---|---|
| Line Construction: | | |
| EQUIPMENT OPERATOR (Backhoes over 1/2 yard bucket capacity, cranes rated at 15 ton or more capacity) 95% J.L. rate | $ 32.00 | 4.75+27.75% |
| GROUNDMAN TRUCK DRIVER | $ 21.51 | 4.75+27.75% |
| GROUNDMAN, EQUIPMENT OPERATOR: Diggers, 5th wheel type trucks, crawler type, D-4 and smaller, bucket trucks and live boom type line trucks | $ 24.67 | 4.75+27.75% |
| GROUNDMAN | $ 18.69 | 4.75+27.75% |
| LINEMAN | $ 32.00 | 4.75+27.75% |

---

ENGI0103-003 04/01/2011

INCLUDING UNDERGROUND AND UTILITY CONSTRUCTION

| | Rates | Fringes |
|---|---|---|
| Power equipment operators: | | |
| GROUP 1 | $ 30.70 | 12.91 |
| GROUP 2 | $ 28.98 | 12.91 |
| GROUP 3 | $ 28.06 | 12.91 |
| GROUP 4 | $ 26.56 | 12.91 |

POWER EQUIPMENT OPERATOR CLASSIFICATIONS

GROUP 1: Air compressors in manifold with throttle valve; Asphalt plant engineer; Auto grade or similar type machine; Auto patrol; Backhoe or farm-type tractor, 45 hp and over; Ballast regulator (RR); Bituminous mixer; Bituminous paver; Bituminous plant engineer; Bulldozer; Caisson drilling machine; Cherry picker, 15 ton or over; Chip spreader; Concrete mixer 21 cu. ft. or over; Core drilling machine; Crane or derrick with any attachment (including clamshell, dragline, shovel, backhoe, etc.); Dredge engineer; Dredge operator; Drilling machine on which the drill is an integral part; Earth mover, rubber-tired (paddle wheel, 616, 631, TS-24 or similar type); Earth mover, rubber-tired, tandem ($0.50 per hour additional for each bowl); Elevating grader; Fork lift, 10 ton or over; P.C.C. formless paver post driver; Highlift shovel, 1 1/2 cu. yd. or over; Hoist, 2 drums and over; Helicopter, crew; Hydraulic boom truck; keystone, skimmer scoop; Loader, self-propelled (belt, chain, wheel); Locomotive operator; Mechanic; Mucking machine; Panel board concrete plant, central mix type; Paver, Hetherington; Pile driver, skid or crawler; Road paving mixer; Rock breaking plant; Rock crushing plant, portable; Roller (asphalt, waterbound macadam, bituminous macadam, brick surface); Roller with dozer blade; Root rake, tractor-mounted; Self-propelled widener; Stump remover, tractor-mounted; Surface heater and planer; Tandem push tractor ($0.50 per hour additional); Tractor, boom; Winch or hoe head; Tractor, push; Tractor with scoop; Tractor-mounted spreader; Tree mover; Trench machine, over 24"; Tug boat operator; Well drilling machine; Winch truck with A-frame

GROUP 2: Air compressor with throttle valve or clever brooks-type combination; Backfiller; Backhoe on farm-type tractor, under 45 hp; Bull float; Cherry picker under 15 ton; Chip spreader, self-propelled; Concrete pump; Concrete mesh depressor, independently
operated; Concrete spreader, power-driven; End loader under 1 1/2 cu. yd.; Excavating loader, portable; Finishing machine and bull float; Gunite machine; Head greaser; Mesh or steel placer; Multiple tamping machine (RR); P.C.C. concrete belt placer; Pull grader, power control; Refrigerating machine, freezing operation; Ross carrier; Sheepfoot roller (self-propelled); Tamper (multiple vibrating, asphalt, waterbound macadam, bituminous macadam, brick surface); Trench machine, 24" and under; Tube float; Welder

GROUP 3: Assistant plant engineer; Base paver (Jersey or similar type machine); Concrete finishing machine; Concrete mixer, less than 21 cu. ft.; Curb machine; Farm tractor, including farm tractor with all attachments except backhoe and including high lift end loaders of 1 cu. yd. capacity or less; Fire tender on boiler; Hoist, 1 drum; Operator, 5 pieces of minor equipment; Paving breaker; Power broom, self-propelled; Roller, earth and sub-base material; Slurry seal machine; Spike machine (RR); Tamper (multiple vibrating, earth and sub-base material); Throttle valve and fire tender combination on horizontal or upright boiler; Tractaire with drill; Tractor, 50 h.p. or over; Well point system; Widener, APSCO or similar type

GROUP 4: Air compressor; Assistant to engineer, oiler; Automatic dry batch plant; Bituminous distributor;

Bituminous patching tamper; Belt spreader; Broom and belt machine; Chair cart, self-propelled; Coleman-type screen; Conveyor, portable; Digger post hole, power-driven; Fork lift, under 10 ton; Form grader; Form tamper, motor-driven; Generator; Hetherington driver; Hydra seeder; Operator, 1 through 4 pieces of minor equipment; Outboard or inboard motor boat; Power curing spraying machine; Power saw, concrete, power-driven; Pug mill; Pull broom, power-type; Seaman tiller; Straw blower or brush mulcher; Striping machine paint, motor-driven; Sub grader; Tractaire, tractor, below 50 h.p.; Truck crane oiler, driver; Spreader; Water pump; Welding machine, 2 of 300 amps or over

---

ENGI0150-009 04/01/2010

HEAVY, HIGHWAY AND RAILROAD CONSTRUCTION

ELKHART, FULTON, JASPER, KOSCIUSKO, LAGRANGE, MARSHALL, NEWTON, NOBLE, PULASKI, and STARKE COUNTIES

| | Rates | Fringes |
|---|---|---|
| Power equipment operators: | | |
| GROUP 1 | $ 29.00 | 17.30 |
| GROUP 2 | $ 27.40 | 17.30 |
| GROUP 3 | $ 26.10 | 17.30 |
| GROUP 4 | $ 24.70 | 17.30 |
| GROUP 5 | $ 21.45 | 17.30 |

POWER EQUIPMENT OPERATOR CLASSIFICATIONS

GROUP 1: Air compressors in manifold with throttle valve; Asphalt plant engineer; Auto grade or similar type machine; Auto patrol; Automatic Sub-Grade; Backhoe or farm type tractor, 45 hp and over; Ballast regulator (RR); Barrier Wall Machine; Batch Plants (Concrete & Asphalt); B ituminous mixer; Bituminous paver; Bituminous plant engineer; Boring Machine; Bulldozer; Caisson drilling machine; Cherry picker, 15 ton or over; Chip spreader; Concrete mixer, 21 cu. ft. or over; Concrete Belt Placer; Concrete Paver; Concrete Pump (Truck Mounted); Concrete Saw (track mounted); Concrete Spreader (power driven); Core drilling machine; Crane or derrick with any attachment (including clamshell, dragline, shovel, backhoe, etc.); Curb Machine; Gutter Machine; Dredge engineer; Dredge operator; Drilling machine on which the drill is an integral part; Earthmover, rubber-tired (paddle wheel, 616, 631, TS-24 or similar type); Earthmover, rubber-tired, tandem (.50 per hr. additional for each bowl); Elevating Grader; Forklift (10 ton or over); P.C.C. Formless Paver; Gradall; Gravel Processing Plant (portable); Operator of Guard Rail Post Driver; Highlift Shovel 1-1/2 cu.yd. or over) Frame; Hoist (2 drum & over); Helicopter crew; Hydraulic boom truck; Hydraulic Excavator; Loaded-Self propelled (belt chain wheel); Laser Screed; Locomotive operator; Mechanic; Mucking machine; P.C.C. Concrete Belt Placer; Panel board concrete plant (central mix type); Paver (Hetherington); Pavement Breaker; Pile driver, skid or crawler; Road paving mixer; Rock breaking plant; Rock crushing plant (portable); Roller (asphalt, waterbound macadam, bituminous macadam, brick surface); Roller with dozer blade; Road Widener; Root rake (tractor-mounted); Roto Mill Grinder; Self-propelled widener; Stump remover;

Surface heater and planer; Tandem push tractor ($0.50 per hour additional); Tractor, boom; Winch or hoe head; Tractor (push); Tractor with scoop; Tractor-mounted spreader; Tree mover; Trench machine, over 24"; Tug boat operator; Well drilling machine; Widener (Apsco or similar type); Winch truck with A-frame

GROUP 2: Air compressor with throttle valve or Clever Brooks type combination; Backfiller; Farm type tractor (under 45 H.P.); Cherry picker under 15 ton; Chip spreader (self-propelled); Concrete pump (trailer type); Concrete mesh depressor, independently operated; End loader under 1 1/2 cu. yd.; Excavating loader (portable); Finishing machine and bull float; Gunite machine; Hydraulic Power unit; Head greaser; Mesh or
steel placer; Multiple tamping backhoe on machine (RR); Bull float (bidwell Machine); Refrigerating machine-operation; Ross Carrier; Sheepfoot roller (self-propelled); Tamper-Multiple Vibrating (Asphalt, Waterbound, Macadam, Bituminous Macadam, Brick Surface); Trench machine (24" and under); Tube float; Water Pull/Wagon; Welder

GROUP 3: Plant engineer; Base paver (Jersey or similar type machine); Concrete finishing machine; Concrete mixer, less than 21 cu. ft.; Curb machine; Farm tractor, including farm tractor with all attachments except backhoe and including high lift end loaders of 1 cu. yd. capacity or less; Fireman, on boiler; Hoist, 1 drum; Operator, 3-5 pieces of minor equipment; Paving breaker; Power broom, self-propelled; Roller, earth and sub-base material; Power Saw-Concrete (Power Driven); Slurry seal machine; Spike machine (RR); Sub-surface Material Distributor; Tamper (multiple vibrating, earth and sub-base material); Throttle valve; Throttle Valve and fireman combination on horizontal or upright boiler; Tractaire with drill; Well Point

GROUP 4: Air compressor; Assistant to engineer, oiler; Bituminous patching tamper; Belt spreader; Broom and belt machine; Chair cart, self-propelled; Coleman-type screen; Conveyor, portable; Deck-hand Digger post hole, power-driven; Forklift, under 10 ton; Form grader; Form tamper, motor-driven; Generator; Hetherington driver; Hydra seeder; Mechanic heater; Operator, 2 pieces of minor equipment; Outboard or inboard motor boat; Power curing spraying machine; Pug mill; Pull broom, power type; Seaman tiller; Skid steer loader over 3/4 cu. yd.; Straw blower or brush mulcher; Striping machine paint, motor-driven; Sub-grader; Tractaire; Tractor, below 50 h.p.; Truck crane oiler; Spreader; Water pump

GROUP 5: Skid steer loader under 3/4 cu. yds

---

ENGI0150-030 06/01/2008

UNDERGROUND & UTILITY CONSTRUCTION:

JASPER, NEWTON, PULASKI AND STARKE COUNTIES:

| | Rates | Fringes |
|---|---|---|
| Power equipment operators: | | |
| GROUP 1 | $ 39.00 | 17.78 |
| GROUP 2 | $ 38.20 | 17.78 |
| GROUP 3 | $ 34.00 | 17.78 |

GROUP 4.....$ 31.90 17.78

POWER EQUIPMENT OPERATOR CLASSIFICATIONS

GROUP 1: Mechanic; Asphalt plant; Autograde; Batch plant; Benoto (requires 2 engineers); Boiler and throttle valve; Boring machine (mining machine); Caisson rigs; Central Redi-mix plant; Combination backhoe-endloader with backhoe bucket over 1/2 cu. yd.; Combination tugger hoist and air compressor; Compressor and throttle; Concrete breaker (truck-mounted); Concrete conveyor; Concrete paver over 27E cu. ft.; Concrete paver 27E cu. ft. and under; Concrete pump with boom (truck-mounted); Concrete tower; Cranes and backhoes, all attachments; Cranes, Hammerhead tower; Creter cranes; Derricks, all; Derricks, traveling; Forklift, lull type; Forklift, 10 ton and over; Hoists, 1, 2 and 3 drum; Hoist, 2 tugger - one floor; Hydraulic boom truck; Locomotives, all; Motor patrol; Mucking machine; Pile driving and skid rig; Pit machines; Pre-stress machines; Pumpcrete and similar types; Rock drill, self-propelled; Rock drill, truck-mounted; Slip form paver; Straddle buggies; Tractor with boom and side boom; Trenching machine; Winch tractors

GROUP 2: Asphalt spreader; Boilers; Bulldozers; Combination backhoe-endloader with backhoe bucket 1/2 cu. yd. and under; Engineer acting as conductor in charge of crew; Grader, elevating; Greaser engineer; Grouting machines; Highlift shovels or front endloader; Hoists, automatic; Corboy drilling machines; Hoists, all elevators; Hoists, tugger, single drums; Post hole digger; Roller, all; Scoops, tractor-drawn; Stone crushers; Tournapull; Winch trucks

GROUP 3: Concrete mixer (2 bag and over); Conveyor, portable; Steam generators; Tractor, farm and similar type; Air compressor, small, 150 and under, 1 to 5 not to exceed a total of 300 ft.; Air compressor, large, over 150; Combination, small equipment operator; Forklift, under 10 ton; Generator; Pump, 1 to 3 not to exceed a total of 325 ft.; Pumps; Well points; Welding machines (2 through 5); Winches, 4 electric drill winches

GROUP 4: Heater, mechanical (1 to 5); Oilers; Switchmen

---

ENGI0181-014 04/01/2011

HEAVY AND HIGHWAY CONSTRUCTION:

BARTHOLOMEW, BROWN, CLARK, CRAWFORD, DEARBORN, DECATUR, DUBOIS, FLOYD, FRANKLIN, GIBSON, HARRISON, JACKSON, JEFFERSON, JENNINGS, LAWRENCE, MARTIN, OHIO, ORANGE, PERRY, PIKE, POSEY, RIPLEY, SCOTT, SPENCER, SWITZERLAND, VANDERBURGH, WARRICK, and WASHINGTON COUNTIES

| | Rates | Fringes |
|---|---|---|
| Power equipment operators: | | |
| GROUP A | $ 28.90 | 13.00 |
| GROUP B | $ 26.25 | 13.00 |
| GROUP C | $ 24.12 | 13.00 |

POWER EQUIPMENT OPERATOR CLASSIFICATIONS

GROUP A: Air compressor in manifold with throttle valve; Asphalt plant engineer; Auto grade or similar type machine; Bituminous mixer; Bituminous paver; Bituminous plant engineer; Bulldozer; Caisson drilling machine; Cherry picker, all; Ballast regulator (RR); Chip spreader, self-propelled; Cold grinder or similar type equipment; Concrete mixer, 21 cu. ft. or over; Concrete pump, truck-mounted; Core drilling machine; Crane or derrick with any attachment (including clamshell, dragline, shovel, backhoe, etc.); Dredge operator; Drilling machine on which the drill is an integral part; Earth mover, rubber-tired, tandem 0.50 per hour additional; Elevating grader; Endloader, Hi- lift shovel; P.C.C. formless paver; Gradall; Gravel processing plant, portable; Guardrail post driver operator; Head greaser; Hi-lift shovel, endloader; Hoist (2 drums and over); Helicopter crew; Hydraulic boom truck, Keystone, Skimmer Scoop; Loader, self-propelled (belt, chain wheel); Locomotive operator; Mechanic; Mucking machine; Multi-bank drill operator; Panel board concrete plant, central mix type; Paver, Hetherington; Pile driver, skid or crawler; Road paving mixer; Rock breaking plant; Rock crushing plant, portable; Roller (asphalt, waterbound, macadam, bituminous macadam, brick surface); Roller, with dozer blade; Root rake, tractor-mounted; Stump remover, tractor- mounted; Surface heater and planer; Tandem push tractor, $0.50 per hour additional; Tractor, boom winch or hoe head; Tractor, push; Tractor with scoop; Tractor-mounted spreader; Tree mover; Trench machine, over 24"; Tug boat operator; Welder; Well drilling machine; Self-propelled widener.

GROUP B: Air compressor with throttle valve or clever brooks-type combination; Backfiller, base paver, Jersey or similar type machine; Bull float; Concrete finishing machine; Concrete mesh depressor, independently operated; Concrete spreader, power- driven; Dredge engineer; Excavator loader, portable; Fire tender on boiler; Forklift, regardless of ton; Hoists, 1 drum; Mesh or steel placer; Minor equipment operator, 5 pieces; Multiple tamping machine (RR); P.C.C. concrete placer; Paving breaker; Power broom, self-propelled; Pull grader, power-controlled; Refrigerating machine, freezing operation; Roller, earth and sub- base material; Ross carrier (Straddle buggy); Sheepfoot roller, self-propelled without blade; Tamper, multiple\vibrating (asphalt, waterbound macadam, bituminous macadam, brick surface); Tamper, multiple vibrating (earth and sub-base material); Trench machine, 24" and under; Tube float; Well point system; Widener, Apsco or similar type; Winch truck with A-frame.

GROUP C: Air compressor, oiler; Automatic dry batch plant; Bituminous distributor; Bituminous patching tamper; Belt spreader; Broom and belt machine; Brush burner; Chair cart, self- propelled; Coleman-type screen; Cold grinder oiler; Concrete mixer, less than 21 cu. ft.; Conveyor, portable; Curb machine; Deckhand; Digger (post hole, power-driven); Farm tractor, including farm tractor with all attachments (except backhoe, Hi- lift endloaders); Form grader; Form tamper, motor-driven; Generator; Gunite machine; Hetherington driver; Hydra seeder; Mechanical heater; Minor equipment operator, 1 through 4 pieces; Curing spraying machine; Power saw, concrete (power-driven); Pug mill pull

broom, power type; Seaman tiller; Slurry seal machine; Spike machine; Straw blower or brush mulcher; Stripping machine (paint, motor-driven); Sub grader; Throttle valve; Tractaire with drill; Truck crane and multi-drill oiler, driver; Spreader; Water pump.

---

ENGI0181-015 04/01/2011

SEWER WATERLINE & UTILITY CONSTRUCTION:

BARTHOLOMEW, BROWN, CLARK, CRAWFORD, DEARBORN, DECATUR, DUBOIS, FLOYD, FRANKLIN, GIBSON, HARRISON, JACKSON, JEFFERSON, JENNINGS, LAWRENCE, MARTIN, OHIO, ORANGE, PERRY, PIKE, POSEY, RIPLEY, SCOTT, SPENCER, SWITZERLAND, VANDERBURGH, WARRICK, and WASHINGTON COUNTIES

| | Rates | Fringes |
|---|---|---|
| Power equipment operators: | | |
| GROUP A | $ 28.90 | 13.00 |
| GROUP B | $ 26.25 | 13.00 |

SEWER WATERLINE & UTILITY CONSTRUCTION

GROUP A: A-frame winch truck; Air compressor 900 cu. ft. and over; Air tugger; Autograde (CMI); Auto patrol; Backhoe; Ballast regulator (RR); Batch plant (electrical control concrete); Bending machine (pipe); Bituminous plant (engineer); Bituminous plant; Bituminous mixer travel plant; Bituminous paver; Bituminous roller; Buck hoist; Bulldozer; Cableway; Chicago boom; Clamshell; Concrete mixer, 21 cu. ft. or over; Concrete paver, concrete pump, crete; Crane; Craneman; Crusher plant; Derrick; Derrick boat; Dinky; Dope pots (pipeline); Dragline; Dredge operator; Dredge engineer; Drill operator; Elevator grader; Elevator; Ford hoe, or similar type equipment; Forklift; Formless paver; Gantry crane; Gradall; Grademan; Hopto; Hough loader or similar type; Hydro crane; Motor crane; Mucking machine; Multiple tamping machine (RR); Overhead crane; Pile driver; Pulls; Push dozer; Push boats; Roller (sheep foot); Ross Carrier; Scoop; Shovel; Side boom; Swing crane; Trench machine; Welder (heavy duty; Truck-mounted concrete pump; Truck-mounted drill; Well point; Whirleys.

GROUP B: Air compressor, up to 900 cu. ft.; Brakeman; Bull float; Concrete mixer, over 10S and under 21S; Concrete spreader or puddler; Deck engine; Electric vibrator compactor (earth or rock); Finishing machine; Fireman; Greaser, on grease facilities servicing heavy equipment; Material pump; Motor boats; Portable loader; Post hole digger; Power broom; Rock roller; Roller, wobble wheel (earth and rock); Spike machine (RR); Seaman tiller; Spreader rock; Sub grader; Tamping machine; Welding machine; Widener, Apsco or similar type: Bituminous distributor; Cement gun; Concrete saw; Conveyor; Deckhand oiler; Earth roller; Form grader; Generator; Guard rail driver; Heater; JLG lifts; Oiler; Paving joint machine; Power traffic signal; Scissor lift; Steam Jennyu; Truck crane oiler; Vibrator; Water pump.

---

ENGI0841-011 04/01/2011

HEAVY, HIGHWAY AND UTILITY CONSTRUCTION

BOONE, CLAY, DAVIESS, FOUNTAIN, GREENE, HENDRICKS, KNOX, MONROE, MONTGOMERY, MORGAN OWEN, PARKE, PUTNAM, SULLIVAN, VERMILLIAN, VIGO, and WARREN COUNTIES

| | Rates | Fringes |
|---|---|---|
| Power equipment operators: | | |
| GROUP 1 | $ 28.95 | 15.10+a |
| GROUP 2 | $ 22.70 | 15.10+a |

POWER EQUIPMENT OPERATOR CLASSIFICATIONS

GROUP 1: Air Compressor Over 600 CU FT, Air Compressors (2), Compressors hooked in Manifold, Asphalt Plant Engineer, Auto Grade and/or C.M.I. or similar type Machine, Auto Patrol, Motor Patrol, Power Blade, Aspco Paver, Asphalt Planer, Asphalt Rollers, Asphalt Paver Operator, Concrete or Asphalt Milling Machine, Self Propelled Widener, Backhoe and/or Pavement Breaker Attachment, Self Propelled Pavement Breaker, Ballast Regulator (R.R), Bituminous Mixer, Bituminous Paver, Bituminous Plant Engineer, Bulk Cement Plant Engineer, Bulldozer, One Drum Hoist with Tower or Boom, Cableways, Tower Machines, Back Filler, Boom Tractor, Boom or Winch Truck, Winch or Hydraulic Boom Truck, Boring Machine, Bolier Operator, Brush Mulcher, Bull Float, Finishing Machine, Power Cranes, Overhead Cranes, Truck cranes, Piledriver, Skid or Crawler, Guard Rail Post Driver, Tower Cranes, Hydro Crane, Cherry Picker, Draglines, Derricks, Shovels, Clam, Gradalls, Two Drum Machine, Concrete or Asphalt Curb Machine, Self Propelled, Concrete Mixers with Skid, Tournamixer, Concrete Pump (Truck or Skid Mounted), Concrete Plant Engineer, Soil Cement Machine, Formless Paver, Concrete Spreader, Span Saw (and similar types), Chip Spreader, Mesh Placer, Dredging Equipment or Dredge Engineer or Dredge Operator, Tug Boat Operator, Marine Scoops, Ditching Machine with Dual Attachment, Standard or Dinkey Locomotives, Drilling Machine, including Well Testing, Caissons, Shaft or any similar type Drilling Machine (Well Point Systems), 4 Point Life System (Power Lift or similar type), Mud Cat, Mucking Machine, Sull-Air, Mechanics, Welder, Head Equipment Greaser, Tournapull, Tractor Operating Scoops, Push Tractors, Large Rollers on Earth, Loaders (Track or Rubber Mounted), or similar type Machine, Lull, Tournadozer, Scoopmobiles, Elevating Machines, Power Broom (Self Propelled), Power Sub Grader, Hydra Ax, Farm Tractor with Attachments, Soil Stabilizer (Seaman Tiller, Bo mag, Rago Gator and similar types of equipment), Tree Mover, Stump Remover, Root Rake, Hydra Seeder, Straw Blower, Refrigerating Machine, Freezing Operator, Chair Cart-Self Propelled, Helicopter Crew (3), Ross Carrier or Straddle Buggy or similar Machine, Rock Crusher Plant, Gravel Processing Machine, Pipe Cleaning Machine, Pipe Wrapping Machine, Pipe Bending Machine, Pug Mill, Concrete Bump Grinder Machine, Power Curing Spray Machine, Forklift (except when used for landscaping), Snooper Truck Operator.

GROUP 2: Air Compressor 600 cu. ft. and under, Air Tugger, Air Valves, Assistant Concrete Plant Engineer, Assistant Asphalt Plant Engineer, Asphalt Plant Fireman, Bulk Cement Plant Equipment Greaser, Concrete Mixers without Skips, Curbing Machine, Concrete Saw (Self Propelled),

Conveyors,Cement Blimps, Ditching Machine under 6", Distributor Operator On trucks, Deck Hands, Elevators when used for hoisting material, Engine Tenders, Fork Lift (when used for landscaping), Farm Tractor, Fireman, Fireman on Paint or Dope Pots, Form Tamper, Form Grader, Flex Plane, Generators (two to four), or Welding Machines or Water Pumps, within 400 feet, Gunite Machine, Machine Mounted Post Hole Digger, Mude Jack, One Drum Machines without Tower or Boom, One Water Pump, One Welding Machine, Outboard or Inboard Motor Boat, Pull Broom (Power Type, Siphons and Pulsometer, Switchman, Striping and or Painting Machine (motor driven), Slurry Seal Machine, Track Jack, Temporary Heat, Throttle Valve, Tube Float, Tractaire, Wagon Drill, Multiple Tamping Machine (R.R.), Spike Machine (R.R.), Mechanical Heaters, Brush Burner, Vacuum Truck (Super Sucker and similar types).

FOOTNOTES:

A. Employees operating booms from 149Ft. to 199 Ft. including jib, shall receceive an additional seventy-five Cents (.75) per hour above the rate. Employees operating booms over 199 Ft. including jib, shall receive an additional one dollar and twenty- five cents ($1.25) per hour above the regular rate.

B. Employees operating scoops, pulls, or tractors hooked in tandem shall receive an additional one dollar ($1.00) per hour above the regular rate.

C. Employees operating scoops, pulls, or tractors pulling any other hauling unit in tandem shall receive an additional one dollar ($1.00) per hour above the regular rate.

D. Underground work - Employees working in tunnels, shafts, etc. shall be paid a thirty percent (30%) premium above the wage rate.

---

IRON0022-001 06/01/2010

BARTHOLOMEW, BENTON (REMAINDER OF COUNTY), BOONE, BROWN, CARROLL, CASS, CLAY, CLINTON, DAVIESS (REMAINDER OF COUNTY), DECATUR (W 3/4), DELAWARE (REMAINDER OF COUTNTY), FAYETTE (W 1/3), FOUNTAIN,FRANKLIN (NW TIP), FULTON (REMAINDER OF COUNTY), GRANT (REMAINDER OF COUNTY), GREENE, HAMILTON, HANCOCK, HENDRICKS, HENRY, HOWARD, JACKSON, JASPER (SOUTHEASTERN 1/3), JENNINGS (NORTHWEST 2/3), JOHNSON, KNOX (REMAINDER OF COUNTY), LAWRENCE, MADISON, MARTIN (NW 2/3), MIAMI (REMAINDER OF COUNTY), MONROE, MONTGOMERY, MORGAN, NEWTON (SOUTHERN HALF), OWEN, PARKE, PULASKI (REMAINDER OF COUNTY), PUTNAM, RANDOLPH (SW TIP), RUSH (REMAINDER OF COUNTY), SHELBY, SULLIVAN, TIPPECANOE, TIPTON, VERMILLION, VIGO, WAYNE, WARREN AND WHITE COUNTIES:

| | Rates | Fringes |
|---|---|---|
| IRONWORKER..... | $ 27.50 | 17.55 |

---

IRON0044-010 06/01/2009

DEARBORN, DECATUR (REMAINDER OF COUNTY), FAYETTE (REMAINDER OF COUNTY), FRANKLIN (REMAINDER OF COUNTY), JEFFERSON (REMAINDER

OF COUNTY), JENNINGS (REMAINDER OF COUNTY), OHIO, RIPLEY, RUSH (SOUTHEASTERN TIP), SWITZERLAND, AND UNION (SOUTHERN 1/3)

| | Rates | Fringes |
|---|---|---|
| Ironworkers: | | |
| FENCE ERECTORS | $ 23.55 | 16.72 |
| ORNAMENTAL | $ 26.17 | 16.72 |
| STRUCTURAL, MACHINERY MOVERS, RIGGERS | $ 26.17 | 16.72 |

---

IRON0070-002 06/01/2011

CLARK, CRAWFORD, FLOYD, HARRISON, JACKSON (SOUTHERN 3/4); JEFFERSON (EXCLUDING NORTHEASTERN TIP); JENNINGS (SOUTHERN 3/4), LAWRENCE (SOUTHERN 2/3), MARTIN (SOUTHEASTERN 2/3), ORANGE, PERRY (EASTERN 3/4); SCOTT AND WASHINGTON COUNTIES:

| | Rates | Fringes |
|---|---|---|
| IRONWORKER | $ 25.77 | 18.28 |

---

IRON0103-001 04/01/2011

DAVIESS (S 1/2), DUBOIS, GIBSON, KNOX (S 1/2), MARTIN (SW 1/3), PERRY (W 1/4), PIKE, POSEY, SPENCER, VANDERBURGH, AND WARRICK

| | Rates | Fringes |
|---|---|---|
| IRONWORKER | $ 27.02 | 15.705 |

---

IRON0147-004 06/01/2011

ADAMS, ALLEN, BLACKFORD, DEKALB, DELAWARE (NORTHEAST THIRD OF COUNTY), FULTON (EASTERN PART), GRANT (EXCLUDING SOUTHWEST PORTION), HUNTINGTON, JAY, MIAMI (NORTHEAST HALF), NOBLE (EXCLUDING NORTHEAST TIP), STEUBEN, WABASH, WELLS, and WHITLEY COUNTIES

| | Rates | Fringes |
|---|---|---|
| IRONWORKER | $ 24.64 | 17.87 |

---

IRON0290-004 10/01/2010

FAYETTE (NE 1/4), RANDOLPH (S. PART OF COUNTY EXCLUDING WINCHESTER BUT INCLUDING UNION CITY) UNION (NORTHERN 2/3) AND WAYNE (REMAINDER OF COUNTY) COUNTIES

| | Rates | Fringes |
|---|---|---|
| Ironworkers: | | |
| BEYOND 25 MILES OF DAYTON LOCAL UNION OFFICE | $ 25.78 | 17.55 |
| WITHIN 25 MILES OF DAYTON LOCAL UNION OFFICE | $ 25.63 | 17.55 |

---

IRON0292-005 06/01/2011

ELKHART, FULTON (North 2/3), KOSCIUSKO (Remainder of County), LAGRANGE (West 1/3), MARSHALL, MIAMI (Northwestern Tip), NOBLE (Northwestern Tip), PULASKI (Northeast Half), and STARKE COUNTIES

| | Rates | Fringes |
|---|---|---|
| IRONWORKER | $ 25.80 | 17.61 |

---

IRON0372-007 06/26/2011

DEARBORN, DECATUR (REMAINDER OF COUNTY), FAYETTE (SE CORNER), FRANKLIN (S 3/4), OHIO, RIPLEY (REM. OF COUNTY), SWITZERLAND (REMAINDER OF COUNTY) and JENNINGS (NE TIP) COUNTIES

| | Rates | Fringes |
|---|---|---|
| IRONWORKER (Reinforcing) | | |
| Beyond 25 miles of Hamilton County, Ohio Court House | $ 26.75 | 17.40 |
| Within 25 miles of Hamilton County, Ohio Court House | $ 26.50 | 17.40 |

---

IRON0395-002 06/01/2009

JASPER (NORTHERN 1/2), NEWTON (NORTHERN 1/2), PULASKI (NORTHWESTERN TIP) COUNTIES

| | Rates | Fringes |
|---|---|---|
| Ironworkers: | | |
| IRONWORKERS | $ 34.00 | 22.07 |
| SHEETER | $ 34.25 | 22.07 |

---

IRON0465-002 06/01/2008

BENTON (NORTHWESTERN TIP), JASPER (REMAINDER OF COUNTY), NEWTON (REMAINDER OF COUNTY)

| | Rates | Fringes |
|---|---|---|
| IRONWORKER | $ 34.50 | 24.03 |

---

* LABO0041-005 04/01/2011

UTILITY CONSTRUCTION

NEWTON COUNTY

| | Rates | Fringes |
|---|---|---|
| Laborers: | | |
| GROUP 1 | $ 28.57 | 11.10 |
| GROUP 2 | $ 28.87 | 11.10 |
| GROUP 3 | $ 29.57 | 11.10 |

LABORERS CLASSIFICATIONS (UTILITY CONSTRUCTION)

GROUP 1: Construction laborer; Fence erector; Flagger; Grade checker; Guard rail erector; Wire mesh layer; Joint man (mortar, mastic and all other types); Lighting installer (permanent or temporary); Lineman for automatic grade maker on paving machines; Mortar man; Multi-plate erector; Rip-rap installer (all products and materials); Road marking and delineation laborer; Setting and placing of all precast concrete products; Sign installation including supporting structure; Spraying of all epoxy, curing compound, or like material; sod layer; Air tool, power tool, and power equipment operator; Asphalt lute man; Asphalt raker man; Batch truck dumper; Bridge handrail erector; Handler (bulk or bag cement); Chain saw man; concrete puddler; concrete rubber; Concrete saw operator; Core drill operator, eye level; Hand blade operator; Hydro seeder man; Motor-driven Georgia buggy operator; Power-driven compactor or tamper operator; Power saw operator; Pumpcrete assembly man; Screed man or screw man on asphalt paver; Rebar installer; Sandblaster man; Sealer applicator for asphalt (toxic); Setting and placing prestressed or precast concrete structural memebers; Side rail setter (for sidewalks, side ditches, radii, and pavements); Spreader box tender (manual or power-driven); Straw blower man; Subsurface drain and culvert pipe layer; Transverse and longitudinal hand bull float man; Concrete conveyor assembly man; Horizontal boring and jacking man; Jackman and sheetman; Pipe grade man; Winch and windlass operator

GROUP 2: Cutting torch burner; Laser beam aligner; Manhole erector; Sewer pipe layer; Water line installer, temporary or permanent; Welder (electric or exy-acetylene) in connection with waterline and sewer work, Hod Carrier (tending bricklayers); TVing and associated grouting of utility lines

GROUP 3: Air track and wagon drillman; Concrete barrier rail form setter; Dynamite and powder man; General leadman; Concrete Saw Joint Control cutting

---

* LABO0041-006 04/01/2011

UTILITY CONSTRUCTION

JASPER COUNTY

| | Rates | Fringes |
|---|---|---|
| Laborers: | | |
| GROUP 1 | $ 28.57 | 11.10 |
| GROUP 2 | $ 28.87 | 11.10 |
| GROUP 3 | $ 29.57 | 11.10 |

LABORERS CLASSIFICATIONS (UTILITY CONSTRUCTION)

GROUP 1: Construction laborer; Fence erector; Flagger; Grade checker; Guard rail erector; Wire mesh layer; Joint man (mortar, mastic and all other types); Lighting installer (permanent or temporary); Lineman for automatic grade maker on paving machines; Mortar man; Multi-plate erector; Rip-rap installer (all products and materials); Road marking and delineation laborer; Setting and placing of all precast concrete products; Sign installation including supporting structure; Spraying of all epoxy, curing

compound, or like material; sod layer; Air tool, power tool, and power equipment operator; Asphalt lute man; Asphalt raker man; Batch truck dumper; Bridge handrail erector; Handler (bulk or bag cement); Chain saw man; concrete puddler; concrete rubber; Concrete saw operator; Core drill operator, eye level; Hand blade operator; Hydro seeder man; Motor-driven Georgia buggy operator; Power-driven compactor or tamper operator; Power saw operator; Pumpcrete assembly man; Screed man or screw man on asphalt paver; Rebar installer; Sandblaster man; Sealer applicator for asphalt (toxic); Setting and placing prestressed or precast concrete structural memebers; Side rail setter (for sidewalks, side ditches, radii, and pavements); Spreader box tender (manual or power-driven); Straw blower man; Subsurface drain and culvert pipe layer; Transverse and longitudinal hand bull float man; Concrete conveyor assembly man; Horizontal boring and jacking man; Jackman and sheetman; Pipe grade man; Winch and windlass operator

GROUP 2: Cutting torch burner; Laser beam aligner; Manhole erector; Sewer pipe layer; Water line installer, temporary or permanent; Welder (electric or exy-acetylene) in connection with waterline and sewer work, Hod Carrier (tending bricklayers); TVing and associated grouting of utility lines

GROUP 3: Air track and wagon drillman; Concrete barrier rail form setter; Dynamite and powder man; General leadman; Concrete Saw Joint Control cutting

---

LABO0081-007 04/01/2011

UTILITY CONSTRUCTION

ALL REMAINING COUNTIES

| | Rates | Fringes |
|---|---|---|
| Laborers: | | |
| GROUP 1 | $ 22.62 | 11.10 |
| GROUP 2 | $ 22.92 | 11.10 |
| GROUP 3 | $ 23.62 | 11.10 |

LABORERS CLASSIFICATIONS (UTILITY CONSTRUCTION)

GROUP 1: Construction laborer; Fence erector; Flagger; Grade checker; Guard rail erector; Wire mesh layer; Joint man (mortar, mastic and all other types); Lighting installer (permanent or temporary); Lineman for automatic grade maker on paving machines; Mortar man; Multi-plate erector; Rip-rap installer (all products and materials); Road marking and delineation laborer; Setting and placing of all precast concrete products; Sign installation including supporting structure; Spraying of all epoxy, curing compound, or like material; sod layer; Air tool, power tool, and power equipment operator; Asphalt lute man; Asphalt raker man; Batch truck dumper; Bridge handrail erector; Handler (bulk or bag cement); Chain saw man; concrete puddler; concrete rubber; Concrete saw operator; Core drill operator, eye level; Hand blade operator; Hydro seeder man; Motor-driven Georgia buggy operator; Power-driven compactor or tamper operator; Power saw operator; Pumpcrete assembly man; Screed man or screw man

on asphalt paver; Rebar installer; Sandblaster man; Sealer applicator for asphalt (toxic); Setting and placing prestressed or precast concrete structural memebers; Side rail setter (for sidewalks, side ditches, radii, and pavements); Spreader box tender (manual or power-driven); Straw blower man; Subsurface drain and culvert pipe layer; Transverse and longitudinal hand bull float man; Concrete conveyor assembly man; Horizontal boring and jacking man; Jackman and sheetman; Pipe grade man; Winch and windlass operator

GROUP 2: Cutting torch burner; Laser beam aligner; Manhole erector; Sewer pipe layer; Water line installer, temporary or permanent; Welder (electric or exy-acetylene) in connection with waterline and sewer work, Hod Carrier (tending bricklayers); TVing and associated grouting of utility lines

GROUP 3: Air track and wagon drillman; Concrete barrier rail form setter; Dynamite and powder man; General leadman; Concrete Saw Joint Control cutting

---

* LABO0999-001 04/01/2011

HEAVY AND HIGHWAY CONSTRUCTION

| | Rates | Fringes |
|---|---|---|
| Laborers: | | |
| GROUP 1 | $ 22.62 | 11.05 |
| GROUP 2 | $ 22.92 | 11.05 |
| GROUP 3 | $ 23.62 | 11.05 |

LABORERS CLASSIFICATIONS

GROUP 1: Building and Construction Laborers; Scaffold Builders (other than for Plasterers); Mechanic Tenders; Window Washers and cleaners; Waterboys and Toolhousemen; Roofers Tenders; Railroad Workers; Masonry Wall Washers (interior and exterior); Cement Finisher Tenders; Carpenter Tenders; All Portable Water pumps with discharge up to (3) inches; Plaster Tenders; Mason Tenders; Flag & Signal Person.

GROUP 2: Waterproofing; Handling of Creosot Lumber or like treated material (excluding railroad material); Asphalt Rakers and Lutemen; Kettlemen; Air Tool Operators and all Pneumatic Tool Operators; Air and Electric Vibrators and Chipping Hammer Operators; Earth Compactors Jackmen and Sheetmen working Ditches deeper than (6) ft.in depth; Laborers working in ditches (6) ft.in depth or deeper; Assembly of Unicrete Pump; Tile Layers (sewer or field) and Sewer Pipe Layer (metallic or non-metallic); Motor driven Wheelbarrows and Concrete Buggies; Hyster Operators; Pump Crete Assemblers; Core Drill Operators; Cement, Lime or Silica Clay Handlers (bulk or bag); Handling of Toxic Materials damaging to clothing; Pneumatic Spikers; Deck Engine and Winch Operators; Water Main and Cable Ducking (metallic and non-metallic); Screed Man or Screw Operator on Asphalt Paver; Chain and Demolition Saw Operators; Concrete Conveyor Assemblers.

GROUP 3: Water Blast Machine Operator; Mortar Mixers; Welders (Acetylene or electric); Cutting Torch or Burner; Cement

Nozzle. Laborers; Cement Gun Operator; Scaffold Builders when Working for Plasterers. Dynamite Men; Drillers - Air Track or Wagon Drilling for explosives Hazardous and Toxic material handler, asbestos removal or handler.

---

* PAIN0012-006 05/02/2011

COMMERCIAL AND INDUSTRIAL

DEARBORN, OHIO, RIPLEY AND SWITZERLAND COUNTIES:

| | Rates | Fringes |
|---|---|---|
| Painters: | | |
| Bridges, Lead Abatement | $ 23.85 | 8.10 |
| Brush & Roller, Paperhanger, Drywall Taping | $ 22.85 | 8.10 |
| Sandblasting, Waterblasting | $ 23.60 | 8.10 |
| Spray | $ 23.35 | 8.10 |

---

PAIN0027-005 06/01/2010

NEWTON COUNTY, West of Highway #41

| | Rates | Fringes |
|---|---|---|
| GLAZIER | $ 38.00 | 24.62 |

---

PAIN0047-005 06/01/2011

BARTHOLOMEW, BOONE, BROWN, DECATUR, HAMILTON, HANCOCK, HENDRICKS, JACKSON, JENNINGS, JOHNSON, LAWRENCE, MARION, MARTIN, MONROE, MORGAN, ORANGE, AND SHELBY COUNTIES

| | Rates | Fringes |
|---|---|---|
| Painters: | | |
| BRIDGE WORK | | |
| Brush & Roller | $ 24.93 | 11.22 |
| Spray, Sandblaster, Waterblaster, Lead Based Paint Abatement | $ 28.99 | 11.22 |
| Brush, Roller | $ 23.93 | 11.22 |
| Spray and Sand-Blasting | $ 24.93 | 11.22 |

---

PAIN0080-001 07/01/2011

BENTON, CARROLL, CASS, CLINTON, FOUNTAIN, MONTGOMERY TIPPECANOE AND WARREN COUNTIES

| | Rates | Fringes |
|---|---|---|
| Painters: | | |
| Brush and Roller | $ 22.75 | 13.34 |
| Spray and Sandblasting | $ 23.75 | 13.34 |

---

PAIN0091-007 06/01/2011

ELKHART, FULTON, KOSCIUSKO AND MARSHALL COUNTIES

| | Rates | Fringes |
|---|---|---|

Painters:
Brush & Roller, Drywall
Taping & Finishing,
Vinyl/Paper Hanging.....$ 25.68 11.85
Spray.....$ 26.18 11.85

---

PAIN0118-005 05/01/2011

CLARK, CRAWFORD, FLOYD, HARRISON JEFFERSON, SCOTT AND WASHINGTON COUNTIES

| | Rates | Fringes |
|---|---|---|
| Painters: | | |
| Brush, Roller & Paperhanger | $ 22.93 | 11.05 |
| Spray, Sandblast & Waterblast | $ 23.93 | 11.05 |

---

PAIN0156-001 04/01/2011

DAVIESS, DUBOIS, GIBZSON, KNOX, PERRY, PIKE, POSSEY, SPENCER, VANDERBURGH, AND WARRICK COUNTIES

| | Rates | Fringes |
|---|---|---|
| Painters: | | |
| BRUSH & ROLLER | $ 25.60 | 12.16 |
| DRYWALL FINISHERS | $ 25.85 | 12.16 |
| MASTICS, CREOSOTES KEWINCH KOATE, & COAL TAR EPOXY | $ 26.60 | 12.16 |
| SPRAY of MASTICS CREOSOTES, KWINCH KOATE, COAL TAR EPOXY | $ 27.60 | 12.16 |
| SPRAY, SANDBLAST, POWER TOOLS, WATERBLAST & STEAM CLEANING | $ 26.60 | 12.16 |

---

PAIN0197-001 08/01/2011

CLAY, GREENE, OWEN, PARKE, PUTNAM, SULLIVAN, VERMILLION AND VIGO COUNTIES:

| | Rates | Fringes |
|---|---|---|
| Painters: | | |
| Brush & Roller | $ 24.45 | 11.51 |
| Sandblasting | $ 26.45 | 11.51 |
| Spray & Pot Man | $ 25.95 | 11.51 |
| Steel up to 30' | $ 24.45 | 11.00 |

---

PAIN0387-004 11/01/2009

DEARBORN, FRANKLIN, OHIO, RIPLEY, and SWITZERLAND COUNTIES

| | Rates | Fringes |
|---|---|---|
| GLAZIER | $ 23.70 | 11.40 |

---

PAIN0460-004 06/01/2011

JASPER, NEWTON, PULASKI, STARKE AND WHITE COUNTIES

| | Rates | Fringes |
|---|---|---|
| Painters: | | |
| Brush & Roller | $ 33.99 | 19.88 |
| Drywall Taping & Finishing | $ 34.79 | 19.88 |

---

PAIN0469-002 07/01/2011

ADAMS, ALLEN, DEKALB, GRANT, HUNTINGTON, LAGRANGE, NOBLE, STEUBEN, WABASH, WELLS, and WHITLEY COUNTIES

| | Rates | Fringes |
|---|---|---|
| Painters: | | |
| 101' & over | $ 22.01 | 11.17 |
| 31' - 60' | $ 21.41 | 11.17 |
| 61' - 100' | $ 21.81 | 11.17 |
| Brush, Roller, Paperhanger, & Drywall Finishing | $ 20.56 | 11.17 |
| Lead Abatement | $ 25.56 | 11.17 |
| Spray & Sandblast Pot Tenders and Ground Personnel | $ 21.46 | 11.17 |
| Spray, Sandblast, Power Tools, Waterblast, & Steam Cleaning | $ 21.56 | 11.17 |

---

PAIN0669-001 04/01/2011

BLACKFORD, DELAWARE, FAYETTE, FRANKLIN, HENRY, HOWARD, JAY, MADISON, MIAMI, RANDOLPH, RUSH, TIPTON, UNION and WAYNE COUNTIES

| | Rates | Fringes |
|---|---|---|
| Painters: | | |
| Brush; Roller; Paperhanging; Drywall Finishers | $ 20.00 | 10.44 |
| Spray/Waterblasting; Sandblasting | $ 21.00 | 10.44 |

---

PAIN1165-014 07/01/2011

CLARK, CRAWFORD, DAVIESS, DUBOIS, FLOYD, GIBSON, HARRISION, JEFFERSON, KNOX, MARTIN, ORANGE, PERRY, PIKE, POSEY, SCOTT, SPENCER, VANDERBURGH, WARRICK AND WASHINGTON

| | Rates | Fringes |
|---|---|---|
| GLAZIER | $ 26.78 | 11.07 |

---

PAIN1165-017 07/01/2011

ADAMS, ALLEN, BLACKFORD, DE KALB, GRANT, HUNTINGTON, JAY, NOBLE, STEUBEN, WABASH, WELLS AND WHITLEY COUNTIES

| | Rates | Fringes |
|---|---|---|

GLAZIER.....$ 22.00 11.62

---

PAIN1165-018 07/01/2011

JASPER and NEWTON (East of Highway #41) COUNTIES

| | Rates | Fringes |
|---|---|---|
| GLAZIER | $ 32.87 | 17.60 |

---

PAIN1165-019 07/01/2011

ELKHART, FULTON, KOSCIUSKO, LAGRANGE, MARSHALL, PULASKI, and STARKE COUNTY

| | Rates | Fringes |
|---|---|---|
| GLAZIER | $ 22.24 | 14.00 |

---

PAIN1165-022 07/01/2011

BARTHOLOMEW, BENTON, BOONE, BROWN, CARROLL, CASS, CLAY, CLINTON, DECATUR, DELEWARE, FAYETTE, FOUNTAIN, GREENE,HAMILTON, HANCOCK, HENDRICKS, HENRY, HOWARD, JACKSON, JENNINGS, JOHNSON, LAWRENCE, MADISON, MARION, MIAMI, MONROE, MONTGOMERY, MORGAN, OWEN, PARKE, PUTNAM, RANDOLPH, RUSH, SHELBY, SULLIVAN, TIPPECANOE, TIPTON, UNION, VIGO, VERMILLION, WARREN, WAYNE, and WHITE COUNTIES

| | Rates | Fringes |
|---|---|---|
| GLAZIER | $ 25.86 | 11.87 |

---

PLAS0075-001 06/01/2007

CLAY, OWEN, PARKE, PUTNAM, VERMILLION AND VIGO COUNTIES:

| | Rates | Fringes |
|---|---|---|
| CEMENT MASON/CONCRETE FINISHER | $ 22.75 | 8.40 |

---

PLAS0101-001 01/01/2009

FULTON AND MARSHALL COUNTIES; PULASKI COUNTY (SOUTHERN 1/2):

| | Rates | Fringes |
|---|---|---|
| CEMENT MASON/CONCRETE FINISHER | $ 27.76 | 9.87 |

---

PLAS0101-003 06/01/2007

ADAMS, ALLEN, DEKALB, HUNTINGTON, NOBLE, STEUBEN, WELLS AND WHITLEY COUNTIES

| | Rates | Fringes |
|---|---|---|
| CEMENT MASON/CONCRETE FINISHER | $ 22.50 | 8.79 |
| PLASTERER | $ 24.18 | 9.31 |

---

PLAS0438-003 06/01/2011

PULASKI (NOTHERN 2/3), JASPER (N. EASTERN PORTION OF WEST TO BUT NOT INCLUDING WHEATFIELD), ALL OF STARKE COUNTY

| | Rates | Fringes |
|---|---|---|
| CEMENT MASON/CONCRETE FINISHER | $ 34.26 | 21.40 |

---

PLAS0692-002 06/01/2010

AREA #46

BARTHOLOMEW, BOONE, BROWN, CLARK, CLAY, CRAWFORD, DAVIESS, DUBOIS, GIBSON, HENDRICKS, JACKSON, JEFFERSON, JENNINGS, JOHNSON, KNOX, LAWRENCE, MARION, MARTIN, MONROE, MORGAN, ORANGE, OWEN, PARKE, PERRY, PIKE, POSEY, PUTNAM, SCOTT, SHELBY, SPENCER, VANDERBURGH, VERMILLION, VIGO and WARRICK COUNTIES

| | Rates | Fringes |
|---|---|---|
| PLASTERER | $ 25.04 | 12.48 |

---

PLAS0692-009 07/01/2010

AREA #83

BLACKFORD, DELAWARE, GRANT, HAMILTON (Northern Part), HANCOCK (Northern Part), JAY, MADISON and WABASH COUNTIES

| | Rates | Fringes |
|---|---|---|
| CEMENT MASON/CONCRETE FINISHER | $ 24.10 | 10.69 |
| PLASTERER | $ 25.69 | 11.75 |

---

PLAS0692-011 06/01/2010

AREA #83

DECATUR, FAYETTE, FRANKLIN, HENRY, RANDOLPH, RUSH, UNION and WAYNE COUNTIES

| | Rates | Fringes |
|---|---|---|
| CEMENT MASON/CONCRETE FINISHER | $ 24.10 | 10.69 |
| PLASTERER | $ 25.69 | 11.75 |

---

PLAS0692-015 06/01/2010

AREA #121

BENTON, CARROLL, CASS, CLINTON, FOUNTAIN, HOWARD, MIAMI, MONTGOMERY, TIPPECANOE, WARREN, WHITE and VERMILLION (Northern Part) COUNTIES

| | Rates | Fringes |
|---|---|---|
| CEMENT MASON/CONCRETE FINISHER | $ 24.95 | 12.40 |
| PLASTERER | $ 25.61 | 12.40 |

---

PLAS0692-018 01/01/2011

AREA #165

NEWTON COUNTY

| | Rates | Fringes |
|---|---|---|
| CEMENT MASON/CONCRETE FINISHER... | $ 33.14 | 13.80 |

---

PLAS0692-022 01/01/2010

Southward on Rt. No. 49 to the JASPER, BENTON and WHITE County lines, including the City Limits of Wheatfield, Rensselaer and Remington, Indiana. To the West, the boundary of NEWTON County

| | Rates | Fringes |
|---|---|---|
| CEMENT MASON/CONCRETE FINISHER AREA #406..... | $ 31.23 | 14.27 |

---

PLAS0692-023 06/01/2010

AREA #532

BOONE, HAMILTON (SOUTH HALF OF COUNTY NORTH TO NEW ROUTE INDIANA #32 INCLUDING NOBLESVILLE); HANCOCK COUNTY (SOUTHERN AND WESTERN PART OF HANCOCK COUNTY, NORTH TO BUT NOT INCLUDING FORTVILLE); HENDRICKS, JOHNSON, MARION and MORGAN COUNTIES

| | Rates | Fringes |
|---|---|---|
| CEMENT MASON/CONCRETE FINISHER... | $ 25.25 | 12.75 |

---

PLAS0692-027 04/01/2010

AREA #566

CRAWFORD, DAVIESS, DUBOIS, GIBSON, HARRISON, KNOX, MARTIN, PERRY, PIKE, POSEY, SPENCER, VANDERBURGH and WARRICK COUNTIES

| | Rates | Fringes |
|---|---|---|
| CEMENT MASON/CONCRETE FINISHER... | $ 23.80 | 12.71 |

---

PLAS0692-033 05/01/2007

BROWN, CLARKE, DEARBORN, FLOYD, FRANKLIN (SOUTHERN 1/2), JENNINGS, OHIO, RIPLEY AND SWITZERLAND COUNTIES

| | Rates | Fringes |
|---|---|---|
| CEMENT MASON/CONCRETE FINISHER AREA #821..... | $ 21.90 | 8.25 |

---

PLUM0136-003 04/01/2011

DAVIESS, DUBOIS, GIBSON, JACKSON, LAWRENCE, MARTIN, MONROE, ORANGE, OWEN, PERRY, PIKE, POSEY, SPENCER, VANDERBURGH, and WARRICK COUNTIES

| | Rates | Fringes |
|---|---|---|
| Plumbers and Pipefitters..... | $ 32.27 | 14.86 |

---

PLUM0157-002 07/01/2011

BENTON, CARROLL, CLINTON, FOUNTAIN, MONTGOMERY, TIPPECANOE, WARREN AND WHITE COUNTIES:

| | Rates | Fringes |
|---|---|---|
| Plumbers and Pipefitters..... | $ 34.67 | 13.31 |

---

PLUM0166-001 06/01/2011

ADAMS, ALLEN, BLACKFORD, DE KALB, GRANT, HUNTINGTON, NOBLE, STEUBEN, WABASH, WELLS, and WHITLEY COUNTIES

| | Rates | Fringes |
|---|---|---|
| Plumber and Steamfitter..... | $ 29.75 | 12.77 |

---

PLUM0166-002 06/01/2011

ELKHART, KOSCIUSKO, and LAGRANGE COUNTIES

| | Rates | Fringes |
|---|---|---|
| PLUMBER..... | $ 29.75 | 12.77 |

---

PLUM0172-001 05/30/2011

JASPER (S of the N. Side of the City of Rensselear), MARSHALL, PULASKI and STARKE COUNTIES

| | Rates | Fringes |
|---|---|---|
| Plumber, Pipefitter, Steamfitter..... | $ 29.61 | 16.55 |

---

PLUM0210-003 01/01/2011

JASPER (to the City of Rensselaer) and NEWTON COUNTIES

| | Rates | Fringes |
|---|---|---|
| PLUMBER..... | $ 36.30 | 18.03 |

---

* PLUM0392-006 09/01/2011

DEARBORN, RIPLEY, OHIO AND SWITZERLAND COUNTIES

| | Rates | Fringes |
|---|---|---|
| Plumbers and Pipefitters..... | $ 29.30 | 15.74 |

---

PLUM0440-002 06/01/2011

BARTHOLOMEW, BOONE, HAMILTON, HANCOCK, HENDRICKS, HOWARD, JOHNSON AND MARION COUNTIES; MIAMI COUNTY (SOUTH OF A STRAIGHT

LINE WHERE ROUTE 218 ENTERS W. BOUNDARY); MORGAN, SHELBY and TIPTON COUNTIES

| | Rates | Fringes |
|---|---|---|
| Plumbers and Pipefitters | $ 33.42 | 14.89 |

---

PLUM0502-001 08/01/2011

CLARK, FLOYD AND HARRISON COUNTIES

| | Rates | Fringes |
|---|---|---|
| PLUMBER/PIPEFITTER | $ 31.00 | 16.13 |

---

PLUM0597-004 06/01/2008

JASPER (Excluding the city limits of Rensselear), AND NEWTON (Entire County)

| | Rates | Fringes |
|---|---|---|
| PIPEFITTER | $ 42.05 | 17.58 |

---

PLUM0661-002 07/01/2011

FAYETTE, FRANKLIN, HENRY, RANDOLPH, RUSH, UNION and WAYNE COUNTIES

| | Rates | Fringes |
|---|---|---|
| Plumber and Steamfitter | $ 30.87 | 14.43 |

---

ROOF0023-004 06/01/2010

ELKHART, FULTON, KOSCIUSKO, LAGRANGE, MARSHALL, PULASKI, and STARKE COUNTIES

| | Rates | Fringes |
|---|---|---|
| Roofers: | | |
| COMPOSITION | $ 27.11 | 11.05 |
| SLATE & TILE | $ 27.11 | 11.05 |

---

ROOF0023-008 06/01/2010

ALLEN, DEKALB, NOBLE, STEUBEN, and WHITLEY COUNTIES

| | Rates | Fringes |
|---|---|---|
| Roofers: | | |
| COMPOSITION | $ 18.00 | 8.46 |
| SLATE & TILE | $ 18.50 | 8.46 |

---

ROOF0106-006 04/01/2011

CRAWFORD, DAVIESS, DUBOIS, GIBSON KNOX, MARTIN, ORANGE PERRY, PIKE, POSEY, SPENCER, VANDERBURGH AND WARRICK

| | Rates | Fringes |
|---|---|---|
| Roofers: | | |
| COMPOSITION | $ 26.87 | 12.07 |
| SLATE & TILE | $ 27.37 | 12.07 |

---

ROOF0150-002 07/01/2011

CLAY, GREENE, OWEN, PARKE, SULLIVAN, VERMILLION AND VIGO COUNTIES

| | Rates | Fringes |
|---|---|---|
| ROOFER, Including Built Up, Composition and Single Ply Roofs | $ 26.50 | 9.32 |

---

SHEE0020-003 07/01/2010

ADAMS, ALLEN, BLACKFORD, CASS, DEKALB, GRANT, HOWARD, HUNTINGTON, JAY, MIAMI, NOBLE, STEUBEN, WABASH, WELLS, and WHITLEY COUNTIES

| | Rates | Fringes |
|---|---|---|
| Sheet metal worker (HVAC Duct Work) | $ 31.01 | 17.21 |

---

SHEE0020-010 07/01/2011

BARTHOLOMEW, BOONE, BROWN, DECATUR, DELAWARE, FAYETTE, FRANKLIN, HAMILTON, HANCOCK, HENDRICKS, HENRY, JACKSON, JENNINGS, JOHNSON, LAWRENCE, MADISON, MARION, MONROE, MORGAN, ORANGE, RIPLEY, RUSH, SHELBY, TIPTON, UNION AND WASHINGTON COUNTIES

| | Rates | Fringes |
|---|---|---|
| Sheet metal worker | $ 31.72 | 17.75 |

---

* SHEE0020-024 07/04/2011

CLAY, GREENE, MARTIN, OWEN, PARKE, PUTNAM, SULLIVAN, VERMILLION, and VIGO COUNTIES

| | Rates | Fringes |
|---|---|---|
| Sheet metal worker | $ 31.22 | 16.90 |

---

TEAM0135-003 04/01/2011

REMAINING COUNTIES

| | Rates | Fringes |
|---|---|---|
| Truck drivers: | | |
| GROUP 1 | $ 25.81 | 426.60/wk + .37 |
| GROUP 2 | $ 25.86 | 426.60/wk + .37 |
| GROUP 3 | $ 25.91 | 426.60/wk + .37 |
| GROUP 4 | $ 25.96 | 426.60/wk + .37 |

```
GROUP 5.....................$ 26.01  426.60/wk + .37
GROUP 6.....................$ 26.06  426.60/wk + .37
GROUP 7.....................$ 26.11  426.60/wk + .37
GROUP 8.....................$ 26.16  426.60/wk + .37
GROUP 9.....................$ 26.21  426.60/wk + .37
GROUP10.....................$ 25.66  426.60/wk + .37
GROUP11.....................$ 25.76  426.60/wk + .37
GROUP12.....................$ 26.31  426.60/wk + .37
```

TRUCK DRIVER CLASSIFICATIONS

GROUP 1: Single axle straight trucks; Batch trucks, wet or dry 3 (34E) axle or less; Single axle Grease and maintenance truck used to service on-road trucks

GROUP 2: Single axle fuel and water trucks

GROUP 3: Single axle "dog-legs", and tandem truck or dog-legs; Winch trucks or A-frames when used for transportation purposes; Drivers on batch trucks, wet or dry over 3 (34E) batches and tandem axle grease and maintenance truck used to service on-road trucks

GROUP 4: Tandem axle fuel trucks; tandem axle water trucks; butuminous distributors (two-man)

GROUP 5: Tandem trucks over 15 tons payload; Single axle semi trucks; Farm tractors hauling material; Mixer trucks (all types); Trucks pulling tilt-top trailer single axle; Single axle low- boys; Truck-mounted pavement breakers

GROUP 6: Tandem trucks or "dog-legs"; Semi-water Truck; Sprinkler Truck; Heavy equipment-type water wagons, 5,000 gallons and under; butuminous distributors (one-man)

GROUP 7: Tri-axle trucks; Tandem axle semi trucks; Equipment when not self-loaded or pusher loaded, such as Koehring or similar dumpsters, track trucks, Euclid bottom dump and hug bottom dump, tournatrailers, tournarockers, Acey wagons or for similar equipment (12c yds or less); Mobile mixer truck; Tandem Axle trucks pulling tilt-top trailer; Tandem - Axle lowboy; Tri- Axle batch Truck; Tri-Axle grease and maintenance truck used to service on-road trucks

GROUP 8: Tandem-tandem semi trucks; Truck mechanics and welders; Heavy equipment-type water wagon over 5,000 gallons; Tri-Axle Trucks pulling tilt-top trailer; Low-boys, tandem-tandem axle

GROUP 9: Low-boys, tandem tri-axle; Acey wagons up to and including 3 buckets; Equipment when not self-loaded or pusher loaded, such as kochring or similar dumpsters, Track Trucks, Euclid bottom dump and hug bottom dump, Tournatrailers, Tournarockers, Acey wagons or for similar equipment (over 12co. yds.)

GROUP 10: Pick-up trucks

GROUP 11: Helpers; Greasers; Tire men; Batch board tenders; Warehouseman

GROUP 12: Acey wagon (over 3 buckets); Quad Axle Trucks

---

WELDERS - Receive rate prescribed for craft performing operation to which welding is incidental.

==========

Unlisted classifications needed for work not included within the scope of the classifications listed may be added after award only as provided in the labor standards contract clauses (29CFR 5.5 (a) (1) (ii)).

---

In the listing above, the "SU" designation means that rates listed under the identifier do not reflect collectively bargained wage and fringe benefit rates. Other designations indicate unions whose rates have been determined to be prevailing.

---

WAGE DETERMINATION APPEALS PROCESS

1.) Has there been an initial decision in the matter? This can be:

* an existing published wage determination
* a survey underlying a wage determination
* a Wage and Hour Division letter setting forth a position on a wage determination matter
* a conformance (additional classification and rate) ruling

On survey related matters, initial contact, including requests for summaries of surveys, should be with the Wage and Hour Regional Office for the area in which the survey was conducted because those Regional Offices have responsibility for the Davis-Bacon survey program. If the response from this initial contact is not satisfactory, then the process described in 2.) and 3.) should be followed.

With regard to any other matter not yet ripe for the formal process described here, initial contact should be with the Branch of Construction Wage Determinations. Write to:

Branch of Construction Wage Determinations
Wage and Hour Division
U.S. Department of Labor
200 Constitution Avenue, N.W.
Washington, DC 20210

2.) If the answer to the question in 1.) is yes, then an interested party (those affected by the action) can request review and reconsideration from the Wage and Hour Administrator (See 29 CFR Part 1.8 and 29 CFR Part 7). Write to:

Wage and Hour Administrator
U.S. Department of Labor
200 Constitution Avenue, N.W.
Washington, DC 20210

The request should be accompanied by a full statement of the interested party's position and by any information (wage payment data, project description, area practice material, etc.) that the requestor considers relevant to the issue.

3.) If the decision of the Administrator is not favorable, an

interested party may appeal directly to the Administrative Review Board (formerly the Wage Appeals Board). Write to:

Administrative Review Board
U.S. Department of Labor
200 Constitution Avenue, N.W.
Washington, DC 20210

4.) All decisions by the Administrative Review Board are final.

==========

END OF GENERAL DECISION

# SECTION VI

# STATE FORM NO. 96
# QUESTIONNAIRE/NON-COLLUSION AFFIDAVIT

# CONTRACTORS BID FOR PUBLIC WORK

## PART I

(To be completed for all bids)
(Please type or print)

_____

Date:_____

1. Governmental Unit (Owner):_____
2. County :_____
3. Bidder (Firm):_____

   Address:_____

   City/State:_____
4. Telephone Number:_____
5. Agent of Bidder (if applicable):_____

Pursuant to notices given, the undersigned offers to furnish labor and/or material necessary to complete the public works project of _____ (Governmental Unit) in accordance with plans and specifications prepared by _____ _____ and dated _____ for the sum of _____ $_____

The undersigned further agrees to furnish a bond or certified check with this bid for an amount specified in the notice of the letting. If alternative bids apply, the undersigned submits a proposal for each in accordance with the notice. Any addendums attached will be specifically referenced at the applicable page.

If additional units of material included in the contract are needed, the cost of units must be the same as that shown in the original contract if accepted by the Governmental Unit. If the bid is to be awarded on a unit basis, the itemization of the units shall be shown on a separate attachment.

The Contractor and his subcontractors, if any, shall not discriminate against or intimidate any employee, or applicant for employment, to be employed in the performance of this contract, with respect to any matter directly or indirectly related to employment because of race, religion, color, sex, national origin or ancestry. Breach of this covenant may be regarded as a material breach of the contract.

CERTIFICATION OF USE OF UNITED STATES STEEL PRODUCTS
(If applicable)

I, the undersigned bidder or agent as a contractor on a public works project, understand my statutory obligation to use steel products made in the United States. I.C. 5-16-8-2. I hereby certify that I and all subcontractors employed by me for this project will use U.S. steel products on this project if awarded. I understand that violations hereunder may result in forfeiture of contractual payments.

## ACCEPTANCE

The above bid is accepted this _____ day of _____, _____, subject to the following conditions: _____

_____

Contracting Authority Members:

_____ _____

_____ _____

_____ _____

## PART II

(Complete sections I, II, III, and IV for all state and local public works projects as required by statutes if project is one hundred thousand dollars ($100,000) or more. (IC 36-1-12-4)

Governmental Unit: _____

Bidder (Firm) _____

Date: _____

These statements to be submitted under oath by each bidder with and as a part of his bid. Attach additional pages for each section as needed.

## SECTION I EXPERIENCE QUESTIONNAIRE

1. What public works projects has your organization completed for the period of one (1) year prior to the date of the current bid?

| Contract Amount | Class of Work | When Completed | Name and Address of Owner |
|---|---|---|---|
| | | | |
| | | | |
| | | | |
| | | | |

2. What public works projects are now in process of construction by your organization?

| Contract Amount | Class of Work | When to be Completed | Name and Address of Owner |
|---|---|---|---|
| | | | |
| | | | |
| | | | |
| | | | |

3. Have you ever failed to complete any work awarded to you? _____ If so, where and why?

_____

_____

_____

4. List referenced from private firms for which you have performed work.

_____

_____

_____

_____

_____

## SECTION II PLAN AND EQUIPMENT QUESTIONNAIRE

1. Explain your plan or layout for performing proposed work. (Examples could include a narrative of when you could begin work, completed the project, number of workers, etc. and any other information which you believe would enable the governmental unit to consider your bid.)

2. If you intend to sublet any portion of the work, state the name and address of each subcontractor, equipment to be used by the subcontractor, and whether you expect to require a bond. However, if you are unable to currently provide a listing, please understand a listing must be provided prior to contract approval.

3. What equipment do you have available to use for the proposed project? Any equipment to be used by subcontractors may also be required to be listed by the governmental unit.

4. Have you entered into contracts or received offers for all materials which substantiate the prices used in preparing your proposal? Otherwise, please explain the rationale used which would corroborate the prices listed.

## SECTION III CONTRACTOR'S FINANCIAL STATEMENT

Attachment of bidder's financial statement is mandatory. Any bid submitted without said financial statement as required by statute shall thereby be rendered invalid. The financial statement provided hereunder to the governing body awarding the contract must be specific enough in detail so that said governing body can make a proper determination of the bidder's capability for completing the project if awarded.

## SECTION IV OATH AND AFFIRMATION

I hereby affirm under the penalties of perjury that the facts and information contained in the foregoing bid for public works are true and correct to the best of my knowledge and belief.

Dated at _____ this _____ day of _____, _____

_____
(Name of Organization)

By_____

_____
(Title of Person Signing)

## ACKNOWLEDGEMENT

STATE OF _____)
)
COUNTY OF_____)

_____ being duly sworn, deposes and says that he is _____

_____ of the above _____
(Title) (Name of Organization)

and that the answers to the questions in the foregoing questionnaires and all statements therein contained are true and correct.

Subscribed and sworn to before me this _____ day of _____, _____.

_____
Notary Public

My Commission Expires:_____

County of Residence:_____

NON – COLLUSION AFFIDAVIT

The undersigned bidder or agent, being duly sworn on oath, says that he has not, nor has any other member, representative, or agent of the firm, company, corporation or partnership represented by him, entered into any combination, collusion or agreement with any person relative to the price to be bid by anyone at such letting nor to prevent any person from bidding nor to include anyone to refrain from bidding, and that this bid is made without reference to any other bid and without any agreement, understanding or combination with any other person in reference to such bidding.

He further says that no person or persons, firms, or corporation has, have or will receive directly or indirectly, any rebate, fee, gift, commission or thing of value on account of such sale.

OATH AND AFFIRMATION

I affirm under the penalties of perjury that the foregoing facts and information are true and correct to the best of my knowledge and belief.

Dated at _____ this _____ day of _____, _____.

_____
(Name of Organization)

By_____

_____
(Title of Person Signing)

ACKNOWLEDGEMENT

STATE OF _____)
) SS:
COUNTY OF_____)

_____ being duly sworn, deposes and says that he is _____

_____ of the above _____
(Title) (Name of Organization)

and that the statements contained in the foregoing bid, certification and affidavit are true and correct.

Subscribed and sworn to before me this _____ day of _____, _____.

_____
Notary Public

My Commission Expires:_____

County of Residence:_____

Form No. 96 (Revised 2000)

# BID OF

_____
(Contractor)

_____
(Address)

_____

# FOR

# PUBLIC WORKS PROJECTS

# OF

_____

_____

_____

Filed _____, _____

Action taken _____

_____

# SECTION VII

# GENERAL CONDITIONS

# GENERAL CONDITIONS

# FOR

# CONSTRUCTION

*INDEX TO THE ARTICLES OF THE GENERAL CONDITIONS*


1. DEFINITIONS
2. EXECUTION OF DOCUMENTS
3. CORRELATION, INTERPRETATION AND INTENT OF DOCUMENTS
4. AVAILABILITY OF LANDS; PHYSICAL CONDITIONS; REFERENCE POINTS
5. BONDS AND INSURANCE
6. CONTRACTOR'S RESPONSIBILITIES
7. WORK BY OTHERS
8. OWNER'S RESPONSIBILITIES
9. ENGINEER'S RESPONSIBILITIES DURING CONSTRUCTION
10. CHANGES IN THE WORK
11. CHANGES IN CONTRACT PRICE
12. CHANGE OF CONTRACT TIME
13. LIQUIDATED DAMAGES
14. WARRANTY AND GUARANTEE: TESTS AND INSPECTIONS; CORRECTION, REMOVAL OR ACCEPTANCE OF DEFECTIVE WORK.
15. PAYMENTS AND COMPLETION.
16. SUSPENSION OF WORK AND TERMINATION.
17. ARBITRATION.
18. ENVIRONMENTAL REQUIREMENTS.
19. MISCELLANEOUS.


**1.00. DEFINITIONS.**

The Owner, the Contractor and the Engineer, are those mentioned as such in the Agreement. They are treated throughout the Contract Documents as if each were of the singular number and masculine gender. Wherever used in these General Conditions or in the other Contract Documents, the following terms have the meanings indicated which are applicable to both the singular and plural thereof:

**1.01. ADDENDA.** Written or graphic instruments issued prior to the execution of the Agreement which modify or interpret the Contract Documents, by additions, deletions, clarifications, or corrections. Addenda will become part of the Contract Documents when the Agreement is executed.

**1.02. AGREEMENT.** The contractual agreement between the Contractor and the Owner.

**1.03. APPLICATION FOR PAYMENT.** The form used by Contractor in requesting payments, including accompanying documentation required by the Contract Documents.

**1.04. BID.** The offer or proposal of the Bidder submitted on the prescribed form setting forth the prices for the Work to be performed.

**1.05. BIDDER.** Any person, firm, or corporation submitting a Bid for the Work.

**1.06. BOARD.** The City of Bloomington Board of Public Works.

**1.07. BONDS.** Bid, performance, and payment bonds and other instruments of security, furnished by the Contractor and his surety in accordance with the Contract Documents.

**1.08.** **CHANGE ORDER.** A written order to the Contractor signed by the Owner authorizing an addition, deletion, or revision in the Work, or an adjustment in the Contract Price or the Contract Time issued after execution of the Agreement.

**1.09.** **CONTRACT.** The Contract Documents form the Contract for Construction. The Contract represents the entire and integrated agreement between the parties hereto and supersedes prior negotiations, representations, or agreements, either written or oral. The Contract may be amended or modified only by a Modification. The Contract Documents shall not be construed to create a contractual relationship of any kind (1) between the Engineer and the Contractor, (2) between the Owner and a Subcontractor or Sub subcontractor, or (3) between any persons or entities other than the Owner and Contractor.

**1.10.** **CONTRACT DOCUMENTS.** The Agreement, Addenda (whether issued prior to the opening of Bids or the execution of the Agreement), Change Orders issued by the Owner or Engineer, Invitation to Bid, Instructions to Bidders, Proposal, Non-Collusion Affidavit, Questionnaire, Contractor's Bid, the Bonds, Employment Requirements and Wage Rates, Notification Procedures, General Equipment Stipulations, the Notice of Award, the Notice to Proceed, these General Conditions, the Special Conditions, the Specifications, Drawings, and Modifications.

**1.11.** **CONTRACT PRICE.** The total amount payable to the Contractor under the Contract Documents.

**1.12.** **CONTRACT TIME.** The number of days stated in the Agreement for the completion of the Work, computed as provided in these General Conditions; or by the date set forth in the Agreement. Contract days are not to be determined from the usage of the Indiana Department of Transportation (I.N.D.O.T.) Standard Specifications Manual.

**1.13.** **CONTRACTOR.** The person, firm, or corporation with whom the Owner has executed the Agreement and is referred to throughout the Contract Documents as if singular in number. The term "Contractor" means the Contractor or the Contractor's authorized representative. The relationship of the Contractor to the Owner shall be that of an independent contractor.

**1.14.** **DAY.** A calendar day of twenty-four hours measured from midnight to the next midnight.

**1.15.** **DATE OF CONTRACT.** The date written in the first paragraph of the Contract Agreement.

**1.16.** **DRAWINGS OR PLANS.** The graphic and pictorial portions of the Contract Documents, wherever located or whenever issued, showing the design, location and dimensions of the Work, generally including plans, elevations, sections, details, schedules and diagrams.

**1.17.** **ENGINEER.** The City Engineer, person, firm, or corporation named by the Owner "the City of Bloomington", or the duly authorized agents of the Engineer, acting within the scope of the duties entrusted to them.

**1.18.** **FIELD ORDER.** A written order issued by the Engineer which clarifies or interprets the Contract Documents or orders minor changes in the Work.

**1.19.** **MODIFICATION.** (a) A written amendment of the Contract Documents signed by both parties. (b) A Change Order. (c) A written clarification or interpretation issued by the Engineer. (d) A written order for a minor change or alteration in the Work issued by the Engineer. A Modification may be issued only after execution of the Agreement.

**1.20.** **NOTICE OF AWARD.** The Written notice by the Owner to the apparent successful Bidder stating that upon compliance with the conditions precedent to be fulfilled by him within the time specified, the Owner will execute and deliver the Agreement to him.

**1.21.** **NOTICE TO PROCEED.** A written notice given to the Contractor by the Owner (with a copy to the Engineer) fixing the date on which the Contract Time will commence to run and on which the Contractor shall start to perform his obligations under the Contract Documents.

**1.22.** **OWNER.** The City of Bloomington named and designated in the Agreement as "Owner" acting through its Board of Public Works and its authorized agents. All notices, letters, and other

communication directed to the Owner shall be addressed and delivered to the Office of the City Engineer, 401 North Morton, Bloomington, Indiana, 47401.

**1.23.** **PROJECT.** The total construction of which the Work performed under the Contract Documents may be the whole or a part, and which may include construction by the Owner or by separate contractors.

**1.24.** **QUOTE.** The offer or proposal of the Quoter submitted on the prescribed form setting forth the prices for the Work to be performed.

**1.25.** **QUOTER** Any person, firm, or corporation submitting a Quote for the Work.

**1.26.** **RESPONSIBLE Bidder.** One who is fully capable of performing the contract requirements and who has the integrity and reliability to insure faithful performance.

**1.27.** **RESPONSIVE Bidder.** One who has submitted a bid conforming in all material respects to the Contract Documents.

**1.28.** **SHOP DRAWINGS.** All drawings, diagrams, illustrations, brochures, schedules and other data which are prepared by the Contractor, a Subcontractor, manufacturer, supplier or distributor and which illustrate the equipment, material or some portion of the Work.

**1.29.** **SPECIFICATIONS.** Those portions of the Contract Documents consisting of written technical descriptions of materials, equipment, construction systems, standards and workmanship as applied to the Work, and performance of related services.

**1.30.** **SUBCONTRACTOR.** An individual, firm, or corporation having a direct contact with the Contractor or with any other Subcontractor for the performance of a part of the Work to a special design at the site, but does not include a firm which merely furnishes material.

**1.31.** **SUBSTANTIAL COMPLETION.** The date as determined by the Engineer when the construction of the Project or a specified part thereof is sufficiently completed, in accordance with the Contract Documents, so that the Project or specified part can be utilized for the purposes for which it was intended; or if there be no such determination, the date of final completion.

**1.32.** **WORK.** Any and all obligations, duties, and responsibilities necessary to the successful completion of the Project assigned to, or undertaken by, the Contractor under the Contract Documents, including all labor, materials, equipment, and other incidentals, and the furnishing thereof.

**1.33. MISCELLANEOUS DEFINITIONS**

**1.33.1.** **AS ORDERED, AS DIRECTED, AS REQUIRED, AS PERMITTED, AS ALLOWED.** The order, directions, requirement, permission, or allowance of the Owner or Engineer is intended only to the extent of judging compliance with the Contract Documents. The terms do not imply that the Owner or Engineer has any authority or responsibility for supervision of the Contractor's forces or construction operations. Such supervision is the sole responsibility of the Contractor.

**1.33.2.** **REASONABLE, SUITABLE, ACCEPTABLE, PROPER, SATISFACTORY.** The terms reasonable, suitable, acceptable, proper, and satisfactory mean such to the Owner or Engineer and are intended only to the extent of judging compliance with the Contract Documents.

**1.33.3.** **UNDERSTOOD AND AGREED.** Whenever in these Contract Documents the expression "it is understood and agreed" or an expression of like import is used, such expression means the mutual understanding and agreement of the parties executing the Contract Agreement.

**2.00.** **EXECUTION OF AGREEMENT.**

**2.01.** **EXECUTION OF AGREEMENT.** The Agreement and other Contract Documents will be executed as set forth in the Special Conditions.

**2.02.** **DELIVERY OF BONDS.** When the executed Agreements are delivered to the Owner, the Contractor shall also deliver to the Owner such Bonds as he may be required to furnish in accordance with the Agreement.

**2.03.** **COPIES OF DOCUMENTS.** The Owner shall furnish to the Contractor the number of copies of the Contract Documents set forth in the Special Conditions or a minimum of 3 sets of complete documents.

**2.04.** **CONTRACTOR'S PRE-AWARD REPRESENTATIONS.** The Contractor represents that he has familiarized himself with, and assumes full responsibility for having familiarized himself with, the nature and extent of the Contract Documents, Work, locality, and with all local conditions and federal, state, and local laws, ordinances, rules and regulations that may in any manner affect performance of the Work, and represents that he has correlated his study, observations and site visits with the requirements of the Contract Documents. The Contractor also represents that he has studied all surveys and investigation reports of subsurface and latent physical conditions referred to in the Specifications and made such additional surveys and investigations as he deems necessary for the performance of the Work at the Contract Price in accordance with the requirements of the Contract Documents and that he has correlated the results of all such data with the requirements of the Contract Documents.

**2.05.** **COMMENCEMENT OF CONTRACT TIME; NOTICE TO PROCEED.** Unless otherwise provided in the SPECIAL CONDITIONS**,** the Contractor will be expected to start active and continuous work on the contract within 15 calendar days after the date of the Notice to Proceed. In **no case** shall work begin prior to the date of the Notice to Proceed unless this time is waived and mutually agreed upon and indicated on the Notice to Proceed.

If a delayed starting date is indicated in the proposal, the 15 calendar day limitation shall be waived. Work day charges will then begin on a date mutually agreed upon, but not later than the delayed starting date specified. In the event that any contract is canceled after an award has been made but prior to the issuing of the Notice to Proceed, no reimbursement will be made for any expenses accrued relative to this contract during that period.

**2.06.** **STARTING THE PROJECT.** The Engineer shall be notified at least 3 days in advance of the date on which the work is expected to begin. Should the prosecution of the work for any reason be discontinued, the Engineer shall be notified at least 24 hours in advance of resuming operations.

**2.07.** **BEFORE STARTING CONSTRUCTION.** Before undertaking each part of the Work, the Contractor shall carefully study and compare the Contract Documents and check and verify pertinent figures shown thereon and all applicable field measurements. He shall at once report in writing to the Engineer any conflict, error, or discrepancy which he may discover. However, he shall not be liable to the Owner or Engineer for his failure to discover any conflict, error, or discrepancy in the Drawings or Specifications.

**2.08.** **SUBMISSION OF SCHEDULES.** Within ten days after delivery of the executed Agreement by the Owner to the Contractor, the Contractor shall submit to the Engineer for review, an estimated progress schedule that shall be in 'Critical Path' format and indicating the starting and completion dates of the various stages of the Work, and a preliminary schedule of Shop Drawing submissions and other specified schedules. The 'Critical Path' schedule must include all possible overlapping work that can be accomplished should one action or function not be available or accessible to the contractor in order to show that the Contractors interrelated activities that will control the work path to complete the project within the time limits set forth for the project.

Contracts with less than 60 calendar days completion time, less than 35 work days, or less than 60 days between the notice to proceed and the completion date do not need to submit a progress schedule.

The progress schedule may be used as a basis for establishing major construction operations and as a check on the progress of the work. The Engineer shall be notified at least 3 days in advance of the date on which the work is expected to begin.

Sufficient materials, equipment, labor shall be provided by the Contractor to meet the progress schedule (if required) and to guarantee the completion of the project in accordance with the plans and specifications.

**3.00. CORRELATION, INTERPRETATION, AND INTENT OF CONTRACT DOCUMENTS.**

It is the intent of the Specifications and Drawings to describe a complete Project to be constructed in accordance with the Contract Documents. The Contract Documents comprise the entire Agreement between the Owner and the Contractor. They may be altered only by a Modification.

The Contract Documents are complementary. What is called for by one is as binding as if called for by all. If the Contractor finds a conflict, error, or discrepancy in the Contract Documents, he shall call it to the Engineer's attention in writing at once. Before proceeding with the Work affected thereby, he shall not be liable to the Owner or Engineer for his failure to discover any conflict, error or discrepancy in the Specifications or Drawings. Any Work that may reasonably be inferred from the Specifications or Drawings as being required to produce the intended result shall be supplied whether or not it is specifically called for. Work, materials or equipment described in words which so applied have a well-known technical or trade meaning shall be deemed to refer to such recognized standards.

In case of discrepancy, calculated dimensions will govern over scaled dimensions; plans will govern over specifications; special conditions will govern over the plans and specifications. The instructions to bidders and the description of the pay items listed in the itemized proposal will govern over plans, specifications, and special conditions. The precedence outlined herein shall not absolve the Contractor of his responsibility with regard to errors and omissions, or from his requirement to follow all IOSHA, OSHA, any local safety ordinances, and general good construction practices.

Advantage shall not be taken of any apparent error or omission in the plans or specifications. In the event such an error or omission is discovered, the Engineer shall be notified immediately in writing. Such corrections and interpretations as may be deemed necessary for fulfilling the intent of the plans and specifications will then be made.

**4.00. AVAILABILITY OF LANDS; PHYSICAL CONDITIONS; REFERENCE POINTS.**

**4.01. AVAILABILITY OF LANDS.** The Owner shall furnish, as indicated in the Contract Documents and not later than the Notice to Proceed, the lands upon which the Work is to be done, rights-of-way for access thereto, and such other lands which are designated for use by the Contractor. Easements for permanent structures or permanent changes in existing facilities will be obtained and paid for by Owner, unless otherwise specified in the Contract Documents. If the Contractor believes that any delay in the Owner's furnishing these lands or easements entitles him to an extension of the Contract Time, he may make a claim therefore as provided in these General Conditions

**4.02. PHYSICAL CONDITIONS; SURVEYS AND REPORTS.** Refer to **Instructions to Bidders**. For identification of those surveys and investigation reports of subsurface and latent physical conditions at the Project site or otherwise affecting performance of the Work which have been relied upon by the Engineer in preparation of the Drawings and Specifications, refer to **SPECIAL CONDITIONS**.

**4.03. UNFORESEEN PHYSICAL CONDITIONS.** The Contractor shall promptly notify the Owner and Engineer in writing of any subsurface or latent physical conditions at the site differing materially from those indicated in the Contract Documents. The Engineer will promptly investigate those conditions and advise the Owner in writing if further surveys or subsurface tests are necessary. Promptly thereafter, the Owner shall obtain the necessary additional surveys and tests and furnish copies to the Engineer and Contractor. If the Engineer finds that the results of such surveys or tests indicate that there are subsurface or latent physical conditions which differ materially from those intended in the Contract Documents, and which could not reasonably have been anticipated by the Contractor, a Change Order shall be issued incorporating the necessary revisions.

**4.04.** **REFERENCE POINTS.** The Owner shall provide engineering surveys for construction to establish reference points which in his judgment are necessary to enable the Contractor to proceed with the Work. The Contractor shall be responsible for surveying and laying out the Work (unless otherwise provided in the Special Conditions), and shall protect and preserve the established reference points and shall make no changes or reallocations without the prior written approval of the Owner. He shall report to the Engineer whenever any reference point is lost or destroyed or requires relocation because of necessary changes in grades or locations. The Contractor shall replace and accurately relocate all reference points so lost, destroyed or moved at the Contractor's expense.**5.00.**

**BONDS AND INSURANCE**.

**5.01.** **PERFORMANCE, PAYMENT AND OTHER BONDS.** The Contractor shall furnish a Performance Bond, Payment Bond, and other Bonds specified in **AGREEMENT** as security for the faithful performance and payment of all his obligations under the Contract Documents. The Performance Bond shall be in an amount at least equal to *100%* of the Contract Price, unless otherwise listed in **SPECIAL CONDITIONS**. Bonds shall be executed on the forms (when provided) included in the Contract Documents and with such sureties as are licensed to conduct business in the state of Indiana and are named in the current list of "Surety Companies Acceptable on Federal Bonds" as published in Circular 570 (amended) by the Audit Staff Bureau of Accounts, U.S. Treasury Department. The surety shall have an "A" minimum rating of performance and a financial rating strength of five times the Contract Price, all as stated in "Best's Key Rating Guide, Property-Liability". Each Bond shall be accompanied by a "Power of Attorney" authorizing the attorney-in-fact to bind the surety and certified to include the date of the Bond.

**5.02.** **TERMINATION OF SURETY.** If the surety on any Bond furnished by the Contractor is declared a bankrupt or becomes insolvent or its right to do business is terminated or revoked in any state where any part of the Project is located, the Contractor shall within five days thereafter substitute another Bond and surety, both of which shall be acceptable to the Owner.

**5.03.** **CONTRACTOR'S LIABILITY INSURANCE.** The Contractor shall purchase and maintain such insurance as will protect him from claims under worker's compensation laws, disability benefit laws, or similar employee benefit laws, from claims for damages because of bodily injury, occupational sickness or disease, or death of his employees, and claims insured by personal injury liability coverage; from claims for damages because of bodily injury, sickness or disease, or death of any person other than his employees including claims insured by personal injury liability coverage; and from claims for injury to or destruction of tangible property, including loss of use resulting therefrom - any or all of which may arise out of or result from the Contractor's operations under the Contract Documents, whether such operations be by himself or by any Subcontractor or anyone directly or indirectly employed by any of them or for whose acts any of them may be legally liable. This insurance shall include the specific coverage's and be written for not less than any limits of liability and maximum deductibles specified in the Supplementary Conditions or required by law, whichever is greater, shall include contractual liability insurance and shall include the Owner and Engineer as additional insured parties. Before starting the Work, the Contractor shall file with the Owner and Engineer certificates of such insurance, acceptable to the Owner; these certificates shall contain a provision that the coverage afforded under the policies will not be canceled or materially changed until at least fifteen days prior written notice has been given to the Owner and Engineer.

**6.00.** **CONTRACTOR'S RESPONSIBILITIES.**

**6.01.** **SUPERVISION AND SUPERINTENDENCE.** The Contractor shall supervise and direct the Work efficiently and with his best skill and attention. He shall be solely responsible for the means, methods, techniques, sequences and procedures of construction, but he shall not be solely responsible for the negligence of others in the design or selection of a specific means, method, technique, sequence or

procedure of construction which is indicated in and required by the Contract Documents. The Contractor shall be responsible to see that the finished Work complies accurately with the Contract Documents.

**6.02. RESIDENT SUPERINTENDENT.** The Contractor shall keep on the Work site at all times during its progress a competent resident superintendent, who shall not be replaced without written notice to the Owner and Engineer except under extraordinary circumstances. The superintendent will be the Contractor's representative at the site and shall have authority to act on behalf of the Contractor. All communications given to the superintendent shall be as binding as if given to the Contractor.

**6.03. LABOR, MATERIALS AND EQUIPMENT.** The Contractor shall furnish all materials, equipment, labor, transportation, construction equipment and machinery, tools, appliances, fuel, power, light, heat, telephone, water and sanitary facilities, and all other facilities and incidentals necessary for the execution, testing, initial operation, and completion of the Work.

All materials and equipment shall be new, except as otherwise provided in the Contract Documents. If required by the Engineer, the Contractor shall furnish satisfactory evidence as to the kind and quality of materials and equipment.

All materials and equipment shall be applied, installed, connected, erected, used, cleaned and conditioned in accordance with the instructions of the applicable manufacturer, fabricator or processors, except as otherwise provided in the contract Documents.

The Contractor shall be fully responsible for all acts and omissions of his Subcontractors and of persons and organizations directly or indirectly employed by them, and of persons and organizations for whose acts any of them may be liable to the same extent that he is responsible for the acts and omissions of persons directly employed by him. Nothing in the Contract Documents shall create any contractual relationship between the Owner or Engineer and any Subcontractor or other person or organization having a direct contact with the Contractor, nor shall it create any obligation on the part of the Owner or Engineer to pay or to see to the payment of any monies due any Subcontractor or any other person or organization, except as may otherwise be required by law. The Owner or Engineer may furnish to any Subcontractor or other person or organization, to the extent practicable, evidence of amounts paid to the Contractor on account of specific Work done in accordance with the schedule of values.

The divisions and sections of the Specifications and the identification of any Drawings shall not control the Contractor in dividing the Work among Subcontractors or delineating the Work to be performed by any specific trade.

The Contractor agrees to bind specifically every Subcontractor to the specific terms and conditions of the Contract Documents for the benefit of the Owner.

All Work performed for the Contractor by a Subcontractor shall be pursuant to an appropriate agreement between the Contractor and the Subcontractor which shall contain provisions that waive all rights the contracting parties may have against one another for damages caused by fire or other perils covered by insurance, except such rights as they may have to the proceeds of such insurance. The Contractor shall pay each Subcontractor a just share of any insurance monies received by the Contractor.

**6.04. PATENT FEES AND ROYALTIES.** The Contractor shall pay all license fees and royalties and assume all costs incident to the use in the performance in the Work of any invention, design, process, product or device which is the subject of patent rights or copyrights held by others. If a particular invention, design, process, product or device is specified in the Contract Documents for use in the performance of the Work and if to the actual knowledge of the Owner or Engineer its use is subject to patent rights or copyrights calling for the payment of any license fee or royalty to others, the existence of such rights shall be disclosed by the Owner in the Contract Documents. The Contractor shall indemnify and hold harmless the Owner and Engineer and anyone directly or indirectly employed by either of them from and against all claims, damages, losses and expenses (including attorneys' fees) arising out of any infringement of patent rights or copyrights incident to the use in the performance of the Work

or resulting from the incorporation in the Work of any invention, design, process, product or device not specified in the Contract Documents, and shall defend all such claims in connection with any alleged infringement of such rights.

**6.05. PERMITS.** The Contractor shall obtain and pay for all construction permits and licenses and shall pay all governmental charges and inspection fees necessary for the prosecution of the Work, which are applicable at the time of his Bid. The Owner shall assist the Contractor, when necessary, in obtaining such permits and licenses. The Contractor shall also pay all public utility charges.

**6.06. LAWS AND REGULATIONS.** The Contractor shall give all notices and comply with all laws, ordinances, rules and regulations applicable to the Work. If the Contractor observes that the Specifications or Drawings are in conflict therewith, he shall give the Engineer prompt written notice thereof, and any necessary changes shall be adjusted by an appropriate Modification. If the Contractor performs any Work knowing it to be contrary to such laws, ordinances, rules and regulations, and without such notice to the Engineer, he shall bear all costs arising therefrom; however, it shall not be his primary responsibility to make certain that the Specifications and Drawings are in accordance with such laws, ordinances, rules and regulations.

**6.07. TAXES.** The Contractor shall pay all sales, consumer, use and other similar taxes required to be paid by him in accordance with the law of the place where the work is to be performed.

**6.08. USE OF PREMISES.** The Contractor shall confine his equipment, the storage of materials and equipment and the operations of his workmen to areas permitted by law, ordinances, permits, or the requirements of the Contract Documents, and shall not unreasonably encumber the premises with materials or equipment. No assumptions of allowable traffic closures shall be made by the Contractor unless specifically called for in a "Maintenance of Traffic" plan should one exist. All roadway and lane closures must be approved by the Engineer prior to implementing the closure and a 'Notice of Intent' to close a lane or roadway must be delivered in writing to the Engineer by the Wednesday preceding the week of the desired closure date or time so proper notification can be given to the required personnel.

The Contractor shall not load nor permit any part of any structure to be loaded with weights that will endanger the structure, nor shall he subject any part of the Work to stresses or pressures that will endanger it.

**6.09. RECORD DRAWINGS.** The Contractor shall keep one record copy of all Specifications, Drawings, Addenda, Modifications, and Shop Drawings at the site in good order and annotated to show all changes made during the construction process. These shall be available to the Engineer and shall be delivered to him for the Owner upon completion of the Project and prior to final payment.

**6.10. SAFETY AND PROTECTION.** The Contractor shall be responsible for initiating, maintaining and supervising all safety precautions and programs in connection with the Work. He shall take all necessary precautions for the safety of, and shall provide the necessary protection to prevent damage, injury, or loss to:

1) all employees on the Work and other persons who may be affected thereby.
2) all the Work and all materials or equipment to be incorporated therein, whether in storage on or off the site, and
3) other property at the site or adjacent thereto, including trees, shrubs, lawns, walks, pavements, roadways, structures and utilities not designated for removal, relocation, or replacement in the course of construction.
4) The Contractor shall comply with all applicable laws, ordinances, rules, regulations and orders of any public body having jurisdiction for the safety of persons or property or to protect them from damage, injury or loss. He shall notify owners of adjacent utilities when prosecution of the Work may affect them. All damage, injury or loss to any property caused directly or indirectly, in whole or in part, by the Contractor, any Subcontractor or anyone directly or indirectly employed by any of them or anyone for whose acts any of them may be liable, shall be remedied by the

Contractor: except damage or loss attributable to the fault of Drawings or Specifications or to the acts or omissions of the Owner or Engineer or anyone employed by either of them or anyone for whose acts either of them may be liable, and not attributable, directly or indirectly, in whole or in part, to the fault or negligence of the Contractor. The Contractor's duties and responsibilities for the safety and protection of the Work shall continue until such time as all the Work is completed and the Engineer has issued a notice to the Owner and Contractor in accordance with Supplementary Conditions that the Work is acceptable.

**6.11. SUPERINTENDENT OF SAFETY.** The Contractor shall designate a responsible member of his organization at the site whose duty shall be the prevention of accidents. This person shall be the Contractor's superintendent unless otherwise designated in writing by the Contractor to the Owner. The Superintendent of Safety shall be responsible for the maintenance of traffic control devices and personnel in accordance with the Manual on Uniform Traffic Control Devices (M.U.T.C.D.) for work zone safety.

**6.12. EMERGENCIES.** In emergencies affecting the safety of persons or the Work or property at the site or adjacent thereto, the Contractor, without special instruction or authorization from the Engineer or Owner, is obligated to act, at his discretion, to prevent threatened damage, injury or loss. He shall give the Engineer prompt written notice of any significant changes in the Work or deviations from the Contract Documents caused thereby, and a Change Order shall thereupon be issued covering the changes and deviations involved. If the Contractor believes that additional work done by him in an emergency which arose from causes beyond his control entitles him to an increase in the Contract Price or an extension of the Contract Time, he may make a claim therefore.

**6.13. INDEMNIFICATION.** The Contractor shall indemnify and hold harmless the Owner and Engineer and their agents and employees from and against all claims, damages, losses and expenses including attorneys' fees arising out of or resulting from the performance of the Work, provided that any such claim, damage, loss or expense:

1) is attributable to bodily injury, sickness, disease or death, or to injury to or destruction of tangible property (other than the Work itself) including the loss of use resulting there from and

2) is caused in whole or in part by any negligent act or omission of the Contractor, any Subcontractor, anyone directly or indirectly employed by any of them or anyone for whose acts any of them may be liable regardless of whether or not it is caused in part by a party indemnified hereunder.

In any and all claims against the Owner or Engineer or any of their agents or employees by any employee of the Contractor, any Subcontractor, anyone directly or indirectly employed by any of them or anyone for whose acts any of them may be liable, the indemnification obligation shall not be limited in any way by any limitation on the amount or type of damages, compensation or benefits payable by or for the Contractor or any Subcontractor under workmen's compensation acts, disability benefit acts or other employee benefit acts.

The indemnification obligations of the Contractor shall not extend to the liability of the Engineer, his agents or employees arising out of:

1) the preparation of maps, drawings, opinions, reports, surveys, Change Orders, designs, or specifications or

2) the giving of or the failure to give directions or instructions by the Engineer, his agents or employees, provided such giving or failure to give is the primary cause of injury or damage.

## 7.00. WORK BY OTHERS.

The Owner may perform additional work related to the Project by himself, or he may let other direct contracts therefore which shall contain General Conditions similar to these. The Contractor shall afford the other contractors who are parties to such direct contracts (or the Owner, if he is performing the additional work himself) reasonable opportunity for the introduction and storage of

materials and equipment and the execution of work, and shall properly connect and coordinate his Work with theirs.

If any part of the Contractor's Work depends for proper execution or results upon the work of any such other contractor (or Owner), the Contractor shall inspect and promptly report to the Engineer in writing any defects or deficiencies in such work that render it unsuitable for such proper execution and results. His failure to so report shall constitute an acceptance of the other work as fit and proper for the relationship of his Work except as to defects and deficiencies which may appear in the other work after the execution of his Work.

The Contractor shall do all cutting, fitting, and patching of his Work that may be required to make its several parts come together properly and fit it to receive or be received by such other work. The Contractor shall not endanger any work of others by cutting, excavating, or otherwise altering their work and will only cut or alter their work with the written consent of the Engineer and of the other contractors whose work will be affected.

If the performance of additional work by other contractors or the Owner is not noted in the Contract Documents prior to the execution of the contract, written notice thereof shall be given to the Contractor prior to starting any additional work. If the Contractor believes that the performance of any such additional work by the Owner or others involves him in additional expense or entitles him to an extension of the Contract Time, he may make a claim therefor.

## 8.00. OWNER'S RESPONSIBILITIES.

The Owner shall issue all communications to the Contractor through the Engineer.

In case of termination of the employment of the Engineer, the Owner shall appoint an engineer against whom the Contractor makes no reasonable objection, whose status under the Contract Documents shall be that of the former Engineer. Any dispute in connection with such an appointment shall be subject to arbitration.

The Owner shall furnish the data required of him under the Contract Documents promptly and shall make payments to the Contractor promptly after they are due.

In addition to his rights to request changes in the Work, the Owner shall be obligated to execute Change Orders.

## 9.00. ENGINEER'S STATUS DURING CONSTRUCTION.

**9.01. OWNER'S REPRESENTATIVE.** The Engineer will be the Owner's representative during the construction period. The duties and responsibilities and the limitations of authority of the Engineer as the Owner's representative during construction are set forth in these General Conditions and shall not be extended without the written consent of the Owner and the Engineer.

**9.02. CLARIFICATIONS AND INTERPRETATIONS.** The Engineer will issue with reasonable promptness such written clarifications or interpretations of the Contract Documents (in the form of Drawings or otherwise) as he may determine necessary, which shall be consistent with or reasonably inferable from the overall intent of the Contract Documents. If the Contractor believes that a written clarification and interpretation entitles him to an increase in the Contract Price, he may make a claim therefor.

**9.03. REJECTING DEFECTIVE WORK.** The Engineer will have authority to reject Work which is "defective" (which term is hereinafter used to describe Work that is unsatisfactory, faulty or defective, or does not conform to the requirements of the Contract Documents or does not meet the requirements of any inspection, test or approval referred to in the Specifications, or has been damaged prior to the Engineer's recommendation of final payment). He will also have authority to require special inspection or special testing of the Work whether or not the Work is fabricated, installed or completed.

**9.04. DECISIONS ON DISAGREEMENTS.** The Engineer will be the interpreter of the requirements of the Contract Documents and the judge of the performance hereunder. In his capacity as interpreter and judge he/she will exercise his/her best efforts to insure faithful performance by both Owner and Contractor. He will not show partiality to either and will not be liable for the result of any interpretation or decision rendered in good faith. Claims, disputes, and other matters relating to the execution and progress of the Work or the interpretation of or performance under the Contract Documents shall be referred to the Engineer for decision, which he will render in writing within a reasonable time.

**9.05. ARBITRATION.** Either the Owner or the Contractor may demand arbitration with respect to any such claim, dispute, or other matter that has been referred to the Engineer, except any which have been waived by the making or acceptance of final payment, such arbitration to be in accordance with these General Conditions. However, no demand for arbitration of any such claim, dispute, or other matter shall be made until the earlier of (a) the date on which the Engineer has rendered his decision or (b) the tenth day after the parties have presented their evidence to the Engineer if he has not rendered his written decision before that date. No demand for arbitration shall be made later than thirty days after the date on which the Engineer rendered his written decision in respect to the claim, dispute or other matter as to which arbitration is sought; and the failure to demand arbitration within said thirty days' period shall result in the Engineer's decision being final and binding upon the Owner and the Contractor. If the Engineer renders a decision after arbitration proceedings have been initiated, such decision may be entered as evidence but shall not supersede the arbitration proceedings, except where the decision is acceptable to the parties concerned.

**9.06. LIMITATIONS ON THE ENGINEER'S RESPONSIBILITIES.** Neither the Engineer's authority to act under this article or elsewhere in the Contract Documents nor any decision made by him in good faith either to exercise or not exercise such authority shall give rise to any duty or responsibility of the Engineer to the Contractor, any Subcontractor, any material, man, fabricator, supplier or any of their agents or employees or any other person performing any of the Work.

The Engineer will not be responsible for the Contractor's means, methods, techniques, sequences, or procedures of construction, or the safety precautions and programs incident thereto, and he will not be responsible for the Contractor's failure to perform the Work in accordance with the Contract Documents.

The Engineer will not be responsible for the acts or omissions of the Contractor, or any Subcontractors, or any of his or their agents or employees or any other persons at the site or otherwise performing any of the Work.

## 10.00. CHANGES IN THE WORK.

Without invalidating the Agreement, the Owner may, at any time or from time to time, order additions, deletions or revisions in the Work; these will be authorized by Change Orders and initiated through a Field Order from the Engineer or Owner. Upon receipt of a Change Order, the Contractor shall proceed with the Work involved. All such Work shall be executed under the applicable conditions of the Contract Documents. If any Change Order causes an increase or decrease in the Contract Price or an extension or shortening of the Contract Time, an equitable adjustment will be made as provided in these General Conditions on the basis of a claim made by either party.

The Engineer may authorize minor changes or alterations in the Work not involving extra cost and not inconsistent with the overall intent of the Contract Documents. These may be accomplished by a Field Order. If the Contractor believes that any minor change or alteration authorized by the Engineer entitles him to an increase in the Contract Price, he may make a claim therefore.

Additional work performed by the Contractor without authorization of a Change Order will not entitle him to an increase in the Contract Price or an extension of the Contract Time, except as otherwise provided herein.

The Owner shall execute appropriate Change Orders prepared by the Engineer covering changes in the Work to be performed as provided herein and any other claim of the Contractor for a change in the Contract Time or the Contract Price which is confirmed by the Engineer.

It is the Contractor's responsibility to notify his Surety of any changes affecting the general scope of the Work or change in the Contract Price and the amount of the applicable Bonds shall be adjusted accordingly.

**11.00. CHANGE OF CONTRACT PRICE.**

The Contract Price constitutes the total compensation payable to the Contractor for performing the Work. All duties, responsibilities and obligations assigned to or undertaken by the Contractor shall be at his expense without change in the Contract Price.

The Contract Price may only be changed by a Change Order. Any claim for an increase in the Contract Price shall be based on written notice delivered to the Owner and Engineer within fifteen days of the occurrence of the event giving rise to the claim. Notice of the amount of the claim with supporting data shall be delivered within forty-five days of such occurrence unless the Engineer allows an additional period of time to ascertain accurate cost data. All claims for adjustments in the Contract Price shall be determined by the Engineer if the Owner and the Contractor cannot otherwise agree on the amount involved. Any change in the Contract Price resulting from any such claim shall be incorporated in a Change Order. All changes requested by the Engineer or Owner must be submitted to the Contractor in the form of a Field Order, at which time, the contractor shall provide in return a request for a change order with the prices for said requested work detailed by item and quantity for the Engineer and Owner to review for acceptance and so they can issue a Change Order for the approved work.

The value of any Work covered by a Change Order or of any claim for an increase or decrease in the Contract Price shall be determined in one of the following ways:

1) Where the Work involved is covered by unit prices contained in the Contract Documents, by application of unit prices to the quantities of the items involved.
2) By mutual acceptance of a lump sum.
3) On the basis of the Cost of the Work plus a Contractor's Fee for overhead and profit (determined in accordance with the following paragraphs).

**11.01. COST OF THE WORK.** The term "Cost of the Work" means the sum of all costs necessarily incurred and paid by the Contractor in the proper performance of the Work. Except as otherwise may be agreed to in writing by the Owner, such costs shall be in amounts no higher than those prevailing in the locality of the Project, and shall include only the following items:

1) Payroll costs for employees in the direct employ of the Contractor in the performance of the Work under schedules of job classifications set forth in the Wage Scale Determination. Payroll costs for employees not employed full time on the Work shall be apportioned on the basis of their time spent on the Work. Payroll costs shall include, but not be limited to, salaries and wages plus the cost of fringe benefits which shall include social security contributions, unemployment, excise and payroll taxes, worker's compensation, health and retirement benefits, bonuses, sick leave, vacation and holiday pay applicable thereto. Such employees shall include superintendents and foremen at the site. The expenses of performing Work after regular working hours, on Sunday or legal holidays shall be included in the above to the extent authorized by the Owner.
2) The cost of all materials and equipment furnished and incorporated in the Work, including costs of transportation and storage thereof, and manufacturers' field services required in connection therewith. All cash discounts shall accrue to the Contractor unless the Owner deposits funds with the Contractor with which to make payments, in which case the cash discounts shall accrue to the Owner. All trade discounts, rebates and refunds, and all returns from sale of surplus

materials and equipment shall accrue to the Owner, and the Contractor shall make provisions so that they may be obtained.

3) Payments made by the Contractor to the Subcontractors for Work performed by the Subcontractors. If required by the Owner, the Contractor shall obtain competitive bids from Subcontractors acceptable to him and shall deliver such bids to the Owner, who will then determine with the advice of the Engineer which bids will be accepted. If a subcontract provides that the Subcontractor is to be paid on the basis of Cost of the Work Plus a Fee, the Subcontractor's Cost of the Work shall be determined in the same manner as the Contractor's Cost of the Work. All subcontracts shall be subject to the other provisions of the Contract Documents insofar as applicable.

4) Costs of special consultants (including, but not limited to, engineers, architects, testing laboratories, surveyors, lawyers and accountants) employed for services specifically related to the Work.

**11.02.** **SUPPLEMENTAL COSTS** include the following:

1) The proportion of necessary transportation, traveling and subsistence expenses of the Contractor's employees incurred in discharge of duties connected with the Work.

2) The cost, including transportation and maintenance, of all materials, supplies, equipment, machinery, appliances, office and temporary facilities at the site and hand tools not owned by the workmen, which are consumed in the performance of the Work, and cost less market value of such items used but not consumed which remain the property of the Contractor.

3) Rentals of all construction equipment and machinery and the parts thereof whether rented from the Contractor or others in accordance with the rental agreements approved by the Owner with the advice of the Engineer, and the costs of transportation, loading, unloading, installation, dismantling and removal thereof - all in accordance with the terms of said rental agreements. The rental of any such equipment, machinery or parts shall cease when the use thereof is no longer necessary for the Work.

4) Sales, use or similar taxes related to the Work, and for which the Contractor is liable, imposed by any governmental authority.

5) Deposits lost for causes other than the Contractor's negligence, royalty payments and fees for permits and licenses.

6) Losses, damages and expenses, not compensated by insurance or otherwise, sustained by the Contractor in connection with the execution of, and to, the Work, provided they have resulted from causes other than the negligence of the Contractor, any Subcontractor, or anyone directly or indirectly employed by any of them or for whose acts any of them may be liable. Such losses shall include settlements made with the written consent and approval of the Owner. No such losses, damages and expenses shall be included in the Cost of the Work for the purpose of determining the Contractor's fee. If, however, any such loss or damage requires reconstruction and the Contractor is placed in charge thereof, he shall be paid for his services a fee proportionate to that stated under Contractor's Fee.

7) The cost of utilities, fuel and sanitary facilities at the site.

8) Minor expenses such as telegrams, long distance phone calls, telephone service at the site, expressage and similar petty cash items in connection with the Work.

9) The cost of premiums for additional bonds and insurance required because of changes in the Work.

**11.03** The term "**COST OF THE WORK**" shall *not* include any of the following:

1) Payroll costs and other compensation of the Contractor's officers, executives, principals (of partnership and sole proprietorships), general managers, engineers, architects, estimators, lawyers, auditors, accountants, purchasing and contracting agents, expediters, timekeepers,

clerks, and other personnel employed by the Contractor, whether at the site or in his principal or a branch office for general administration of the Work and not specifically included in the agreed upon schedule of job classifications - all of which are to be considered administrative costs covered by the Contractor's Fee.

2) Expenses of the Contractor's principal and branch offices other than his office at the site.

3) Any part of the Contractor's capital expenses, including interest on the Contractor's capital employed for the Work and charges against the Contractor for delinquent payments.

4) Cost of premiums for all bonds and for all insurance policies whether or not the Contractor is required by the Contract Documents to purchase and maintain the same (except as otherwise provided above).

5) Costs due to the negligence of the Contractor, any Subcontractor, or anyone directly or indirectly employed by any of them or for whose acts any of them may be liable, including but not limited to the correction of defective Work, disposal of materials or equipment wrongly supplied and making good any damage to property.

6) Other overhead or general expense costs of any kind not specifically and expressly included in the Cost of the Work.

**11.04. CONTRACTOR'S FEE.** The Contractor's Fee which includes his overhead and profit shall be determined as follows:

1) A mutually acceptable fee; or , if none can be agreed upon,

2) A fee based on the following percentages of the various portions of the Cost of the Work:

- for payroll costs and the cost of all materials and equipment included in the Work, the Contractor's Profit shall be ten percent.
- for payments to Subcontractors, the Contractor's Profit shall be five percent; and if a subcontract is on the basis of Cost of the Work Plus a Fee, the maximum allowable to the Subcontractor as a fee for overhead and profit shall be ten percent, and
- no fee shall be payable on the basis of costs of special consultants or supplemental costs.

**11.05. CREDIT.** The amount of credit to be allowed by the Contractor to the Owner for any such change which results in a net decrease in cost, will be the amount of the actual net decrease. When both additions and credits are involved in any one change, the combined overhead and profit shall be figured on the basis of the net increase, if any.

Whenever the cost of any Work is to be determined pursuant to preceding paragraphs, the Contractor will submit in form prescribed by the Engineer an itemized cost breakdown together with supporting data.

## 12.00. CHANGE OF CONTRACT TIME.

The Contract Time may only be changed by a Change Order. Any claim for an extension in the Contract Time shall be based on written notice delivered to the Owner and Engineer within fifteen days of the occurrence of the event giving rise to the claim. Notice of the extent of the claim with supporting data shall be delivered within forty-five days of such occurrence unless the Engineer allows an additional period of time to ascertain more accurate data. All claims for adjustment in the Contract Time shall be determined by the Engineer if the Owner and the Contractor cannot otherwise agree. Any change in the Contract Time resulting from any such claim shall be incorporated in a Change Order. Computation of Contract time shall be in accordance with the contract agreement and not that of the Indiana Department of Transportation (INDOT)

The Contract Time will be extended in an amount equal to time lost due to delays beyond the control of the Contractor if he makes a claim therefore as provided in the preceding paragraph. Such delays

shall include, but not be restricted to, acts or neglect by any separate contractor employed by the Owner, fires, floods, labor disputes, epidemics, abnormal weather conditions, or acts of God.

All time limits stated in the Contract Documents are of the essence of the Agreement. The provisions made herein shall not exclude recovery for damages (including compensation for additional professional services) for delay by either party.

## 13.00. LIQUIDATED DAMAGES.

Liquidated damages shall be paid to the Owner in accordance with the Special Conditions if specified therein. If no provision is made in the Special Conditions, liquidated damages shall be paid as follows:

In the event the Contractor fails to satisfactorily complete the entire Work contemplated and provided for under this contract on or before the date of completion as determined and described elsewhere herein, the Owner shall deduct from the amount due the Contractor the sum as indicated on the table below for each calendar day (Sundays and legal holidays excluded) of delay, which sum is agreed upon not as a penalty, but as a fixed and liquidated damage for each day of such delay, to be paid in full and subject to no deduction, it being understood and agreed that timely completion is of the essence. If the monies due the Contractor are less than the amount of such liquidated damages, then the Contractor or his surety shall pay the balance to the Owner.

**SCHEDULE FOR LIQUIDATED DAMAGES FOR EACH DAY OF OVERRUN IN CONTRACT TIME**

| Original Contract Amount | | Daily Charge | |
|---|---|---|---|
| From More Than | To and Including | Calendar Day or Fixed Date | Work Day |
| $0 | $100,000.00 | $200.00 | $200.00 |
| $100,000.00 | $500,000.00 | $300.00 | $400.00 |
| $500,000.00 | $2,000,000.00 | $400.00 | $800.00 |
| $2,000,000.00 | $7,000,000.00 | $500.00 | $1,500.00 |
| $7,000,000.00 | ---------- | $700.00 | $2,000.00 |

**14.00. WARRANTY AND GUARANTEE: TESTS AND INSPECTIONS; CORRECTION, REMOVAL OR ACCEPTANCE OF DEFECTIVE WORK.**

**14.01. WARRANTY AND GUARANTEE.** The Contractor warrants and guarantees to the Owner and Engineer that all materials and equipment will be new unless otherwise specified and that all Work will be of good quality and free from faults or defects and in accordance with the requirements of the Contract Documents and of any inspections, tests or approvals referred to in the Tests and Inspection paragraph. All unsatisfactory Work, all faulty or defective Work, and all Work not conforming to the requirements of the Contract Documents at the time of acceptance thereof or of such inspections, tests or approvals, shall be considered defective. Prompt notice of all defects shall be given to the Contractor. All defective Work, whether or not in place, may be rejected, corrected, or accepted as provided herein.

**14.02. TESTS AND INSPECTIONS.** If the Contract Documents, laws, ordinances, rules, regulations or orders of any public authority having jurisdiction require any Work to specifically be inspected, tested, or approved by some public body, the Contractor shall assume full responsibility therefor, pay all costs in connection therewith and furnish the Engineer the required certificates of inspection, testing, or approval. All other inspections, tests, or approvals required by the Contract Documents shall be performed by organizations acceptable to the Owner and the Contractor and the costs thereof shall be borne by the Owner unless otherwise specified.

The Contractor shall give the Engineer timely notice of readiness of the Work for all inspections, tests or approvals. If any such Work required so to be inspected, tested or approved is covered without written concurrence of the Engineer, it must, if requested by the Engineer, be uncovered for observation, and such uncovering shall be at the Contractor's expense unless the Contractor has given the Engineer timely notice of his intention to cover such Work and the Engineer has not acted with reasonable promptness in response to such notice. This timeframe of notification shall be no less than 2 hours, and occur during normal working hours of the City of Bloomington (Monday through Friday – 8:00a.m. to 5:00p.m.) Requests for inspection during all other hours shall receive 48 hours notice

Neither observations by the Engineer nor inspections, tests or approvals by persons other than the Contractor shall relieve the Contractor from his obligations to perform the Work in accordance with the Contract Documents.

**14.03. ACCESS TO WORK.** The Engineer and his representatives and other representatives of the Owner will at reasonable times have access to the Work. The Contractor shall provide proper and safe facilities for such access and observation of the Work and also for any inspection or testing thereof by others.

**14.04. UNCOVERING WORK.** If any Work is covered contrary to the written request of the Engineer, it must, if requested by the Engineer, be uncovered for his observation and replaced at the Contractor's expense.

If any Work has been covered which the Engineer has not specifically requested to observe prior to its being covered, or if the Engineer considers it necessary or advisable that covered Work be inspected or tested by others, the Contractor, at the Engineer's request, shall uncover, expose or otherwise make available for observation, inspection or testing as the Engineer may require, that portion of the Work in question, furnishing all necessary labor, material and equipment. If it is found that such Work is defective, the Contractor shall bear all the expenses of such uncovering, exposure, observation, inspection and testing and of satisfactory reconstruction, including compensation for additional professional services, and an appropriate deductive Change Order shall be issued. If, however, such Work is not found to be defective, the Contractor shall be allowed an increase in the Contract Price or an extension of the Contract Time, or both, directly attributable to such uncovering, exposure, observation, inspection, testing and reconstruction if he makes a claim therefor.

**14.05. Owner May Stop the Work.** If the Work is defective, or the Contractor fails to supply sufficient skilled workmen or suitable materials or equipment, or if the Contractor fails to make prompt payment to Subcontractors or for labor, materials or equipment, the Owner may order the Contractor to stop the Work, or any portion thereof, until the cause for such order has been eliminated; however, this right of the Owner to stop the Work shall not give rise to any duty on the part of the Owner to exercise this right for the benefit of the Contractor or any other party.

**14.06. Correction or Removal of Defective Work.** If required by the Engineer prior to his recommendation of final payment, the Contractor shall promptly, without cost to the Owner and as specified by the Engineer, either correct any defective Work, whether or not fabricated, installed or completed, or, if the Work has been rejected by the Engineer, remove it from the site and replace it with nondefective Work. If the Contractor does not correct such defective Work within a reasonable time, all as specified in a written notice from the Engineer, the Owner may have the deficiency corrected or the rejected Work removed and replaced. All direct or indirect costs of such correction or removal and replacement, including compensation for additional professional services, shall be paid by the Contractor, and an appropriate deductive Change Order shall be issued. The Contractor shall also bear the expenses of making good all Work of others destroyed or damaged by his correction, removal or replacement of his defective Work.

**14.07. Correction Period.** If, after final payment and prior to the expiration of one year after the date of Substantial Completion (unless a longer period is set forth in the Supplementary Conditions) or such longer period as may be prescribed by law or by the terms of any applicable special guarantee required by the Contract Documents, any Work is found to be defective, the Contractor shall promptly, without cost to the Owner and in accordance with the Owner's written instructions, either correct such defective Work or, if it has been rejected by the Owner, remove it from the site and replace it with nondefective Work. If the Contractor does not promptly comply with the terms of such instructions, the Owner may have the defective Work removed and replaced, and all direct and indirect costs of such removal and replacement, including compensation for additional professional services, shall be paid by the Contractor.

**14.08. Acceptance of Defective Work.** If, instead of requiring correction or removal and replacement of defective Work, the Owner (and, prior to final payment, the Engineer) prefers to accept it, he may do so. In such case, if acceptance occurs prior to final payment, a Change Order shall be issued incorporating the necessary revisions in the Contract Documents, including appropriate reduction in the Contract Price; or, if the acceptance occurs after final payment, an appropriate amount shall be paid by the Contractor to the Owner.

**14.09. Neglected Work by the Contractor.** If the Contractor should fail to prosecute the Work in accordance with the Contract Documents, including any requirements of the progress schedule, the Owner, after seven days written notice to the Contractor may, without prejudice to any other remedy he may have, make good such deficiencies and the cost thereof (including compensation for additional professional services) shall be charged against the Contractor if the Engineer agrees with such action, in which case a Change Order shall be issued incorporating the necessary revisions in the Contract Documents including an appropriate reduction in the Contract Price. If the payments then

or thereafter due the Contractor are not sufficient to cover such amount, the Contractor shall pay the difference to the Owner.

**15.00. PAYMENTS AND COMPLETION.**

**15.01. APPLICATION FOR PROGRESS PAYMENT.** The Contractor may, no more frequently than every two weeks, make an estimate of the value of the Work completed, and submit an Application for Payment. The estimated cost of repairing, replacing, or rebuilding any part of the Work or replacing materials which do not conform to the Contract Documents will be deducted from the estimated value. The Application for Payment shall be submitted to the Engineer for review and approval.

**15.02. CONTRACTOR'S WARRANTY OF TITLE.** The Contractor warrants and guarantees that title to all Work, materials and equipment covered by any Application for Payment, whether incorporated in the Project or not, will pass to the Owner at the time of payment free and clear of all liens, claims, security interests and encumbrances (hereafter in these General Conditions referred to as "Liens").

**15.03. REVIEW OF APPLICATION FOR PAYMENT.** The Contractor shall furnish to the Engineer such detailed information as he may request to aid in the review and approval of such Estimates. The Engineer will, within five working days after receipt of each Application for Payment, either recommend payment and present the Application to the Owner, or return the Application to the Contractor indicating in writing his reasons for refusing to recommend payment. In the latter case, the Contractor may make the necessary corrections and resubmit the Application. The Owner will pay to the Contractor within forty-five days after receipt of Application. Retainage shall be withheld from each payment in the amount of 10% of each Application up to 50% completion. At 50% completion further payments shall be made in full to the contractor and no further amounts may be retained unless the Engineer certifies that the job is not proceeding satisfactorily, but amounts previously retained shall not be paid to the Contractor. At 50% completion or any time thereafter when the progress of the Work is not satisfactory, additional amounts may be retained, but in no event shall the total retainage be more than 10% of the value of the work completed. Upon substantial completion of the work, any amount retained may be paid to the Contractor. When the work has been substantially completed except for the work which cannot be completed due to weather conditions, lack of materials or other reasons which in the judgment of the Owner are valid reasons for noncompletion, the Owner may make additional payments, retaining at all times an amount sufficient to cover the estimated cost of the work still to be completed. Such Applications for Payment are processed on a regular biweekly schedule, which will be provided to the Contractor.

**15.04. FINAL INSPECTION.** When the Work has been substantially completed and at a time mutually agreeable to the Owner, Engineer, and Contractor, the Engineer and Contractor shall make a final walk-through inspection of the Work. The Engineer shall report to the Owner his findings as to the acceptability and completeness of the Work.

**15.05. APPLICATION FOR FINAL PAYMENT.** Upon written notice from the Engineer that Work is completed and acceptable as provided in the Supplementary Conditions, the Contractor shall make application for final payment following the procedure for progress payments. The final Application for Payment shall be accompanied by all other documentation called for in the Contract Documents and such other data and schedules as the Engineer may reasonably require.

**15.06. FINAL PAYMENT.** If, on the basis of his observation and review of the Work during construction, his final inspection and his review of the final Application for Payment, all as required by the Contract Documents, the Engineer is satisfied that the Work has been completed and the Contractor has fulfilled all of his obligations under the Contract Documents, he will, within ten days after receipt of the final Application for Payment, present the Application to the Owner for Payment. Thereupon the Engineer will give written notice to the Contractor that the Work is acceptable subject to the provisions of the paragraph regarding waiver of claims. Otherwise, he will return the Application to the Contractor, indicating in writing his reasons for refusing to recommend final payment, in which case the Contractor shall make the necessary corrections and resubmit the Application. The Owner

shall, within thirty days of presentation to him of the final Application for Payment, pay the Contractor the entire sum found to be due after deducting all amounts to be retained under any provision of the Contract Documents.

**15.07. CONTRACTOR'S CONTINUING OBLIGATION.** The Contractor's obligation to perform the Work and complete the Project in accordance with the Contract Documents shall be absolute. Neither recommendation of any progress or final payment by the Engineer, nor the issuance of a certificate of Substantial Completion, nor any payment by the Owner to the Contractor under the Contract Documents, nor any use or occupancy of the Project or any part thereof by the Owner, nor any act of acceptance by the Owner nor any failure to do so, nor any correction of defective Work by the Owner shall constitute an acceptance of Work not in accordance with the Contract Documents.

**15.08. WAIVER OF CLAIMS.** The making and acceptance of final payment shall constitute:

1) a waiver of all claims by the Owner against the Contractor other than those arising from unsettled Liens, from defective Work appearing after final inspection or from failure to comply with the requirements of the Contract Documents or the terms of any special guarantees specified therein, and

2) a waiver of all claims by the Contractor against the Owner other than those previously made in writing and still unsettled.

**16.00. SUSPENSION OF WORK AND TERMINATION.**

**16.01. OWNER MAY SUSPEND WORK.** The Owner may, at any time and without cause, suspend the Work or any portion thereof for a period of ninety days by notice in writing to the Contractor, which shall fix the date on which Work shall be resumed. The Contractor shall resume the Work on the date so fixed. The Contractor will be allowed an increase in the Contract Price or an extension of the Contract Time, or both, directly attributable to any suspension if he makes a claim therefore as provided in these General Conditions.

**16.02. OWNER MAY TERMINATE.** If the Contractor is adjudged a bankrupt or insolvent, or if he makes a general assignment for the benefit of his creditors, or if a trustee or receiver is appointed for the Contractor or for any of his property, or if he files a petition to take advantage of any debtor's act, or to reorganize under the bankruptcy or similar laws, or if he repeatedly fails to supply sufficient skilled workmen or suitable materials or equipment, or if he repeatedly fails to make prompt payments to Subcontractors or for labor, materials or equipment or if he disregards laws, ordinances, rules, regulations or orders of any public body having jurisdiction, or if he disregards the authority of the Engineer, or if he otherwise violates any provision of the Contract Documents, then the Owner may, without prejudice to any other right or remedy and after giving the Contractor and his Surety seven days written notice, terminate the services of the Contractor and take possession of the Project and of all materials, equipment, tools, construction equipment and machinery thereon owned by the Contractor, and finish the Work by whatever method he may deem expedient. In such case the Contractor shall not be entitled to receive any further payment until the Work is finished. If the unpaid balance of the Contract Price exceeds the direct and indirect costs of completing the Project, including compensation for additional professional services, such excesses shall be paid to the Contractor. If such costs exceed the unpaid balance, the Contractor shall pay the difference to the Owner. Such costs incurred by the Owner shall be incorporated in a Change Order.

1) Where the Contractor's services have been so terminated by the Owner, said termination shall not affect any rights of the Owner against the Contractor then existing or which may thereafter accrue. Any retention or payment of monies by the Owner due the Contractor will not release the Contractor from liability.

2) Upon seven days written notice to the Contractor, the Owner may, without cause and without prejudice to any other right or remedy, elect to abandon the Project and terminate the

Agreement. In such case, the Contractor shall be paid for all Work executed and any expense sustained plus a reasonable profit.

**16.03. CONTRACTOR MAY STOP WORK OR TERMINATE.** If, through no act or fault of the Contractor, the Work is suspended for a period of more than ninety days by the Owner or under an order of court or other public authority, or the Engineer fails to act on any Application for Payment within thirty days after it is submitted, or the Owner fails to pay the Contractor any sum recommended by the Engineer or awarded by arbitrators within thirty days of its approval and presentation, then the Contractor may, upon seven days written notice to the Owner and Engineer, terminate the Agreement and recover from the Owner payment for all Work executed and any expense sustained plus a reasonable profit. In addition and in lieu of terminating the Agreement, if the Engineer has failed to act on an Application for Payment or the Owner has failed to make any payment as aforesaid, the Contractor may upon seven days notice to the Owner and Engineer stop the Work until he has been paid all amounts then due.

## 17.00. ARBITRATION.

Except as otherwise required by the Supplementary Conditions, all claims, disputes and other matters in question arising out of, or relating to, this Agreement or the breach thereof except for claims which have been waived by the making or acceptance of final payment, shall be decided by arbitration in accordance with the Construction Industry Arbitration Rules of the American Arbitration Association then obtaining. This agreement so to arbitrate shall be specifically enforceable under the prevailing arbitration law. The award rendered by the arbitrators shall be final, and judgment may be entered upon it in any court having jurisdiction thereof.

Notice of the demand for arbitration shall be filed in writing with the other party to the Agreement and with the American Arbitration Association, and a copy shall be filed with the Engineer. The demand for arbitration shall be made within thirty days after the Engineer has rendered his decision where applicable, and in all other cases within a reasonable time after the claim, dispute, or other matter in question has arisen, and in no event shall it be made after institution of legal or equitable proceedings based on such claim, dispute or other matter in question would be barred by the applicable statute of limitations.

The Contractor will carry on the Work and maintain the progress schedule during any arbitration proceedings, unless otherwise agreed by him and the Owner in writing.

## 18.00. ENVIRONMENTAL REQUIREMENTS.

The Contractor, when constructing a project involving trenching and/or other related earth excavation, shall comply with the following environmental constraints and be required to install appropriate erosion control devices as determined by the City of Bloomington, which may include, but not be limited to the placement of inlet protection, silt fencing, check dams, temporary seeding and/or mulching. All costs for this work shall be included in the cost of the base bid with work performed by the contractor to ensure that all erosion in contained on site.

**18.01. WETLANDS.** The Contractor, when disposing of excess, spoil, or other related earth construction materials on public or private property, shall not fill in or otherwise convert wetlands

**18.02. FLOODPLAINS.** The Contractor, when disposing of excess, spoil, or other related earth construction materials on public or private property, shall not fill in or otherwise convert 100 year flood plain areas delineated on the latest FEMA Floodplain Maps.

**18.03. HISTORIC PRESERVATION.** Any excavation by the Contractor that uncovers an historical or archaeological artifact shall be immediately reported to the City Engineer's Office. Construction shall be temporarily halted pending the notification process and further directions issued by the City after consultation with the State Historic Preservation Officer (SHPO).

**18.04. ENDANGERED SPECIES.** The Contractor shall comply with the Endangered Species Act, which provides for the protection of endangered and/or threatened species or their critical habitat be brought to the attention of the contractor, the contractor shall immediately report this evidence to the City Engineer. Construction shall be temporarily halted pending the notification process and further directions issued by the OWNER after consultation with the U.S. Fish and Wildlife Service.

**19.00. MISCELLANEOUS.**

**19.01. GIVING NOTICE.** Whenever any provision of the Contract Documents requires the giving of written notice it shall be deemed to be validly given if delivered in person to the individual or to a member of the firm or to an officer of the corporation for whom it is intended, or if delivered at or sent by first class, registered or certified mail, postage prepaid, to the business address provided on the Contractual Agreement.

**19.02. COMPUTATION OF TIME.** Computation of time shall be set forth by the number of calendar days allowed for in the contract agreement. Calendar days shall consist of Monday through Friday excluding Saturday, Sunday, and City of Bloomington observed holidays. The usage of Indiana Department of Transportation (I.N.D.O.T.) standard specifications with regard to time usage or computation does not apply to this contract and therefore is not applicable.

**19.03. ADDITIONAL SPECIFICATION REQUIREMENTS.** Areas of work not covered under Special Conditions will be required to meet specifications covered in applicable sections of Indiana Department of Transportation Specifications 2010 Edition (or latest edition and supplement at time of bid) for the installation and placement of materials to ensure quality workmanship. INDOT Specifications shall not be interpreted to contradict current Public Works, or Bloomington Utility Specifications which shall override and supersede INDOT Specifications.

# SECTION VIII

# SPECIAL CONDITIONS

# Special Conditions

Contractor shall maintain local access for all residents and local business within the limits of the project during construction.

Residents/Business' shall be given 72 hours notice prior to the commencement of construction activities, and 24 hours notice prior to access changes to each respective property.

Contractor shall notify the Engineer by Friday at 10:00a.m. of any traffic changes that result in road or lane closures during the following week. This is to provide for notices to emergency service providers and allow for publication in the Herald-Times.

Contractor shall not disturb/impact historic stone wall located along the east side of Vernal Pike south of the Crescent Road.

Contractor shall follow the current Indiana Manual on Uniform Traffic Control Devices (MUTCD) with regard to all signage and signage placement used during this project.

Contractor shall adjust all castings/valves to final grade within project limits.

# SECTION IX

# SAMPLE AGREEMENT

# AGREEMENT

**BETWEEN**
**DEPARTMENT OF PUBLIC WORKS**
**AND**

**_____Company Name_____**

**FOR**

**Vernal Pike and Crescent Road Intersection Improvements**
**PROJECT NO. PW2011-30**

**THIS AGREEMENT,** executed by and between the City of Bloomington, Indiana, Department of Public Works (hereinafter CITY), and **____Company Name_** , (hereinafter CONTRACTOR);

**WITNESSETH THAT:**

WHEREAS, CITY desires to retain CONTRACTOR'S services for Downtown Intersection Improvements, Project No. PW 2011-20 (more particularly described in Attachment A, "Scope of Work"; and

WHEREAS, CONTRACTOR is capable of performing work that includes but is not limited to; construction of roadway, sidewalk, curb, as per his/her bid on the Bid Summary sheet; and

WHEREAS, CONTRACTOR was determined to be the lowest responsible and responsive bidder for said project.

NOW, THEREFORE, in consideration of the mutual promises hereinafter enumerated, the parties agree as follows:

**ARTICLE 1. TERM**

**1.01** This Agreement shall be in effect upon execution of this Agreement by all parties.

**ARTICLE 2. SERVICES**

**2.01** CONTRACTOR shall complete all work required under this Agreement within forty-five (45) calender days from the written Notice to Proceed. Substantial Completion shall mean completion of all work.

**2.02** It is hereby understood by both parties that time is of the essence in this Agreement. Failure of CONTRACTOR to complete all work as herein provided will result in monetary damages to CITY. It is hereby agreed that CITY will be damaged for every day the work has not been performed in the manner herein provided and that the measure of those damages shall be determined by reference to the then current INDOT Schedule of Liquidated Damages for Each Day of Overrun in Contract Time. CONTRACTOR agrees to pay CITY said damages or, in the alternative, CITY, at its sole discretion, may withhold monies otherwise due CONTRACTOR. It is expressly understood by the parties hereto that these damages relate to the time of performance and do not limit CITY's other remedies under this Agreement, or as provided by applicable law, for other damages.

**2.03** CONTRACTOR agrees that no charges or claims for damages shall be made by him for any delays or hindrances, from any cause whatsoever during the progress of any portion of the services specified in the Agreement. Such delays or hindrances, if any, may be compensated for by an extension of time for a reasonable period as may be mutually agreed upon between the parties, it being understood, however, that permitting CONTRACTOR to proceed to complete any service, or any part of the services / project, after the date to which the

time of completion may have been extended, shall in no way operate as a waiver on the part of CITY of any of its rights herein.

**ARTICLE 3. COMPENSATION**

**3.01** CONTRACTOR shall provide services as specified in Attachment A, "Scope of Work", attached hereto and incorporated into this Agreement.

**3.02** Upon the submittal of approved claims, CITY shall compensate CONTRACTOR in lump sum of _____ ($ . ). CITY may withhold payment, in whole or in part, to the extent necessary to protect itself from a loss on account of any of the following:

1. Defective work.
2. Evidence indicating the probable filing of claims by other parties against CONTRACTOR which may adversely affect CITY.
3. Failure of CONTRACTOR to make payments due to subcontractors, material suppliers or employees.
4. Damage to CITY or a third party.

**3.03** The submission of any request for payment shall be deemed a waiver and release by CONTRACTOR of all liens and claims with respect to the work and period to which such payment request pertains except as specifically reserved and noted on such request.

**3.04** CONTRACTOR shall maintain proper account records for the scope of all services of this Agreement and provide an accounting for all charges and expenditures as may be necessary for audit purposes. All such records shall be subject to inspection and examination by CITY's representatives at reasonable business hours.

**3.05** CONTRACTOR shall submit time sheets (WH-347) for his own and all subcontracted employees, to City Engineer or his representative for approval and review, including review for compliance with Prevailing Wage requirements.

**ARTICLE 4. GENERAL PROVISIONS**

**4.01** CONTRACTOR agrees to indemnify and hold harmless CITY and its officers, agents, officials and employees for any and all claims, actions, causes of action, judgments and liens arising out of any negligent act or omission by CONTRACTOR or any of its officers, agents, officials, employees, or subcontractors or any defect in materials or workmanship of any supply, materials, mechanism or other product or service which it or any of its officers, agents, officials, employees, or subcontractors has supplied to CITY or has used in connection with this Agreement and regardless of whether or not it is caused in part by a party indemnified herein under. Such indemnity shall include attorney's fees and all costs and other expenses arising therefrom or incurred in connection therewith and shall not be limited by reason of the enumeration of any insurance coverage required herein.

**4.02 Abandonment, Default and Termination**

4.02.01 CITY shall have the right to abandon the work contracted for in this Agreement without penalty. If CITY abandons the work described herein, CONTRACTOR shall deliver to CITY all surveys, notes, drawings, specifications and estimates completed or partially completed and these shall become the property of CITY. The earned value of the work performed shall be based upon an estimate of the proportion between the work performed by CONTRACTOR under this Agreement and the work which CONTRACTOR was obligated to perform under this Agreement. This proportion shall be mutually agreed upon by CITY

and CONTRACTOR. The payment as made to CONTRACTOR shall be paid as a final payment in full settlement of his services hereunder.

4.02.02 If CONTRACTOR defaults or fails to fulfill in a timely and proper manner the obligations pursuant to this Agreement, CITY may, after seven (7) days' written notice has been delivered to CONTRACTOR, and without prejudice to any other remedy it may have, make good such deficiencies and may deduct the cost thereof from the payment then or thereafter due to CONTRACTOR. In the alternative, CITY, at its option, may terminate this Agreement and take possession of the site and of all materials, equipment, tools and construction equipment and machinery thereon owned by CONTRACTOR, and may finish the project by whatever method it may deem expedient, and if the such action exceeds the unpaid balance of the sum amount, CONTRACTOR or his surety, shall pay the difference to CITY.

4.02.03 Default: If CONTRACTOR breaches this Agreement or fails to perform the work in an acceptable manner, he shall be considered in default. Any one or more of the following will be considered a default:

1. Failure to begin the work under this Agreement within the time specified.
2. Failure to perform the work with sufficient supervision, workmen, equipment and materials to insure prompt completion of said work within the time limits allowed.
3. Unsuitable performance of the work as determined by CITY ENGINEER or his representative.
4. Neglecting or refusing to remove defective materials or failure to perform anew such work as shall have been rejected.
5. Discontinuing the prosecution of the work or any part of it.
6. Inability to finance the work adequately.
7. If, for any other reason, CONTRACTOR breaches this Agreement or fails to carry on the work in an acceptable manner.

4.02.04 CITY shall send CONTRACTOR a written notice of default. If CONTRACTOR, or his Surety, within a period of ten (10) days after such notice, fails to remedy the default, then CITY shall have full power and authority, without violation of the Contract, to take the prosecution of the work out of the hands of said CONTRACTOR, to appropriate or use any or all materials and equipment on the ground as may be suitable and acceptable, and may, at its option, turn the work over to the Surety, or enter into an agreement with another Contractor for the completion of the Contract according to the terms and provisions thereof, or CITY may use such other methods as, in its opinion, shall be required for the completion of said Contract in an acceptable manner.

4.02.05 All cost of completing the work under the Contract shall be deducted from the monies due or which may become due to said CONTRACTOR. In case the expenses so incurred by CITY shall be less than the sum which would have been payable under the Contract if it had been completed by said CONTRACTOR, CONTRACTOR shall be entitled to receive the difference. However, in case such expense shall exceed the sum which would have been payable under the Contract, CONTRACTOR and his Surety will be liable and shall pay to CITY the amount of said excess. By taking over the prosecution of the work, CITY does not forfeit the right to recover damages from CONTRACTOR or his Surety for his failure to complete the work in the time specified.

4.02.06 Notwithstanding any other provision of this Agreement, if funds for the continued fulfillment of the Agreement by CITY are at any time not forthcoming or are insufficient, through failure of any entity to appropriate the funds or otherwise, then CITY shall have the right to terminate this Agreement without penalty by giving prior written notice documenting the lack of funding in which instance, unless otherwise agreed to by the parties, this Agreement shall terminate and become null and void.

4.02.07 CITY agrees that it will make its best effort to obtain sufficient funds, including but not limited to, including in its budget for each fiscal period during the term hereof a request for sufficient funds to meet its obligations hereunder in full.

## 4.03 Successors and Assigns

4.03.01 Both parties agree that for the purpose of this Agreement, CONTRACTOR shall be an Independent Contractor and not an employee of CITY.

4.03.02 No portion of this Agreement shall be sublet, assigned, transferred or otherwise disposed of by CONTRACTOR except with the written consent of CITY being first obtained. Consent to sublet, assign, transfer, or otherwise dispose of any portion of this Agreement shall not be construed to relieve CONTRACTOR of any responsibility of the fulfillment of this Agreement.

## 4.04 Extent of Agreement: Integration

4.04.01 This Agreement consists of the following parts, each of which is as fully a part of this Agreement as if set out herein:

1. This Agreement
2. Technical Specification ( Attachment A, "Scope of Work")
3. Where applicable, Bid Prices (Attachment B)
4. Upfront Specifications ( Definitions and Bidder's Responsibilities )
5. Information for Bidders
6. Advertisement
7. CONTRACTOR'S submittals
8. The current Indiana Department of Transportation Standard Specifications and the latest addenda
9. All plans as provided for the work that is to be completed

4.04.02 In resolving conflicts, errors, discrepancies and disputes concerning the Scope of Work to be performed by CONTRACTOR, and other rights and obligations of CITY and CONTRACTOR, the document expressing the greater quantity, quality or other scope of work in question, or imposing the greater obligation upon CONTRACTOR and affording the greater right or remedy to CITY shall govern; otherwise the documents shall be given precedence in the order as enumerated above.

## 4.05 Insurance

4.05.01 CONTRACTOR shall, as a prerequisite to this Agreement, purchase and thereafter maintain such insurance as will protect him from the claims set forth below which may arise out of or result from CONTRACTOR'S operations under this Agreement, whether such operations be by CONTRACTOR or by any SUBCONTRACTORS or by anyone directly or indirectly employed by any of them, or by anyone for whose acts any of them may be liable:

| | Coverage | Limits |
|---|---|---|
| A. | Worker's Compensation & Disability | Statutory Requirements |
| B. | Employer's Liability Bodily Injury by Accident<br>Bodily Injury by Disease<br>Bodily Injury by Disease | $100,000 each accident<br>$500,000 policy limit<br>$100,000 each employee |
| C. | Commercial General Liability (Occurrence Basis)<br>Bodily Injury, personal injury, property damage, contractual liability, products-completed | $1,000,000 per occurrence and $2,000,000 in the aggregate |

| | | |
|---|---|---|
| | operations, General Aggregate Limit (other than Products/Completed Operations) | |
| | Products/Completed Operation | $1,000,000 |
| | Personal & Advertising Injury Limit | $1,000,000 |
| | Each Occurrence Limit | $1,000,000 |
| | Fire Damage (any one fire) | $50,000 |
| D. | Comprehensive Auto Liability (single limit, owned, hired and non-owned) | $1,000,000 each accident |
| | Bodily injury and property damage | |
| E. | Umbrella Excess Liability | $5,000,000 each occurrence and aggregate |
| | The Deductible on the Umbrella Liability shall not be more than | $10,000 |

4.05.02 CONTRACTOR'S comprehensive general liability insurance shall also provide coverage for the following:

1. Premises and operations;

2. Contractual liability insurance as applicable to any hold-harmless agreements;

3. Completed operations and products; which also must be maintained for a minimum period of two (2) years after final payment and CONTRACTOR shall continue to provide evidence of such coverage to CITY on an annual basis during the aforementioned period;

4. Broad form property damage - including completed operations;

5. Fellow employee claims under Personal Injury; and

6. Independent Contractors.

4.05.03 With the prior written approval of CITY, CONTRACTOR may substitute different types or amounts of coverage for those specified as long as the total amount of required protection is not reduced.

4.05.04 Certificates of Insurance showing such coverage then in force (but not less than the amount shown above) shall be on file with CITY prior to commencement of work. These Certificates shall contain a provision that coverages afforded under the policies will not be canceled or non renewed until at least sixty (60) days' prior written notice has been received by CITY. The CITY shall be named as an additional insured on the Commercial General Liability, Automobile Liability, and Umbrella Excess Liability policies. The CONTRACTOR shall agree to a waiver of subrogation on its Worker's Compensation policy.

**4.06** **Necessary Documentation** CONTRACTOR certifies that it will furnish CITY any and all documentation, certification, authorization, license, permit or registration required by the laws or rules and regulations of the City

of Bloomington, the State of Indiana and the United States. CONTRACTOR further certifies that it is now and will maintain in good standing with such governmental agencies and that it will keep its license, permit registration, authorization or certification in force during the term of this Agreement.

**4.07** **Applicable Laws** CONTRACTOR agrees to comply with all federal, state, and local laws, rules and regulations applicable to CONTRACTOR in performing work pursuant to this Agreement, including, but not limited to, discrimination in employment, prevailing wage laws, conflicts of interest, public notice, accounting records and requirements. This Agreement shall be governed by the laws of the United States, and the State of Indiana, and by all Municipal Ordinances and Codes of the City of Bloomington. Venue of any disputes arising under this Agreement shall be in the Monroe Circuit Court, Monroe County, Indiana.

**4.08** **Non-Discrimination**

4.08.01 CONTRACTOR and subcontractors shall not discriminate against any employee or applicant for employment, to be employed in the performance of this Agreement, with respect to hire, tenure, terms, training, conditions or privileges of employment, because of race, sex, color, religion, national origin, ancestry, age, handicap, or disabled veteran status. Breach of this covenant may be regarded as a material breach of the Agreement.

4.08.02 CONTRACTOR certifies for itself and all its subcontractors compliance with existing laws of the State of Indiana and the United States regarding:

1. Prohibition of discrimination in employment practices on the basis of race, sex, color, religion, national origin, ancestry, age, handicap, or any other legally protected classification;

2. The utilization of Minority and Women Business Enterprises. CONTRACTOR further certifies that it:

    a. Has formulated its own Affirmation Action plan for the recruitment, training and employment of minorities and women, including goals and timetable; which has been approved by the City's Contract Compliance Officer.

    b. Encourages the use of small business, minority-owned business and women-owned business in its operations.

4.08.03 FURTHER, PURSUANT TO INDIANA CODE 5-16-6-1, CONTRACTOR AGREES:

A) That in the hiring of employees for the performance of work under this Agreement or any subagreement hereunder, no contractor, or subcontractor, nor any person acting on behalf of such CONTRACTOR or subcontractor, shall by reason of race, sex, color, religion, national origin, ancestry, or any other legally protected classification, discriminate against any citizen of the State of Indiana who is qualified and available to perform the work to which the employment relates.

B) That no contractor, subcontractor, or any person on their behalf, shall, in any manner, discriminate against or intimidate any employee hired for performance of work under this Agreement on account of race, religion, color, sex, national origin, ancestry, handicap, or any other legally protected classification.

C) That there may be deducted from the amount payable to CONTRACTOR, by CITY, under this Agreement, penalty of Five Dollars ($5.00) for each person for each calendar day during which such person was discriminated against or intimidated in violation of the provisions of this

Agreement. Any such person discriminated against retains the right to file a discrimination complaint with the appropriate civil rights agency or court.

D) That this Agreement may be canceled or terminated by CITY and all money due or to become hereunder may be forfeited, for a second or any subsequent violations of the terms or conditions under this section of the Agreement.

**4.09 Workmanship and Quality of Materials**

4.09.01 CONTRACTOR shall guarantee the work for a period of one (1) year from the date of substantial completion. Failure of any portion of the work within one (1) year due to improper construction, materials of construction, or design may result in a refund to CITY of the purchase price of that portion which failed or may result in the forfeiture of CONTRACTOR's Performance Bond.

4.09.02 OR EQUAL: Wherever in any of the Contract Documents an article, material or equipment is defined by describing a proprietary product, or by using the name of a manufacturer or vender, the term "Or Equal" or the term "The Equivalent" if not inserted, shall be implied, and it is done for the express purpose of establishing a basis of durability and efficiency and not for the purpose of limiting completion. Whenever material or equipment is submitted for approval as being equal to that specified, the submittal shall include sufficient information and data to demonstrate that the material or equipment conforms to the Contract requirements. The decision as to whether or not such material or equipment is equal to that specified shall be made by the ENGINEER. The approval by the ENGINEER of alternate material or equipment as being equivalent to that specified, shall not in any way relieve CONTRACTOR of responsibility for failure of the material or equipment due to faulty design, material, or workmanship, to perform the function required by the Contract Documents. Specifications as determined by other entities within the City of Bloomington such as City Utilities shall only be substituted or changed by their approval which shall be submitted in writing to the ENGINEER.

4.09.03 CITY shall be the sole judge of the sufficiency of workmanship and quality of materials. Disputes shall be resolved by the Director of Public Works and are not subject to arbitration.

**4.10 Safety**. CONTRACTOR shall be responsible for the safety of employees at all times and shall provide all equipment necessary to insure their safety. CONTRACTOR shall ensure the enforcement of all applicable safety rules, regulations, ordinances and laws, whether federal, state or local. Contractor's Superintendent of Safety shall make daily inspections upon the arrival and leaving of the site at the close of each workday.

**4.11 Amendments/Changes**

4.11.01 Except as provided in Paragraph 4.11.02, this Agreement may be amended only by written instrument signed by both CITY and CONTRACTOR.

4.11.02 Without invalidating the Agreement and without notice to any surety, CITY may at any time or from time to time, order, in writing, additions, deletions or revisions in the work. Upon receipt of any such document, CONTRACTOR shall promptly proceed with the work involved, which will be performed under the applicable conditions of the Contract Documents.

4.11.03 If CONTRACTOR believes that any direction of CITY under paragraph 4.11.02, or any other event or condition, will result in an increase in the Contract time or price, he shall file written notice with CITY no later than twenty (20) days after the occurrence of the event giving rise to the claim and stating the general nature of the claim with supporting data. No claim for any adjustment of the Contract time or price will be valid if not submitted in accordance with this Paragraph.

4.11.04 CONTRACTOR shall carry on the work and adhere to the progress schedule during all disputes or disagreements with CITY. No work shall be delayed or postponed pending resolution of any dispute or disagreement except as CONTRACTOR and CITY may otherwise agree in writing.

**4.12 Performance Bond and Payment Bond**

4.12.01 CONTRACTOR shall provide CITY with a Performance Bond and Payment Bond in the amount of one hundred percent (100%) of the contract amount.

4.12.02 Failure by CONTRACTOR to perform the work in a timely or satisfactory fashion may result in forfeiture of CONTRACTOR'S Performance Bond.

4.12.03 If the surety on any bond furnished by CONTRACTOR becomes a party to supervision, liquidation, or rehabilitation action pursuant Indiana Code 27-9 et seq. or its right to do business in the State of Indiana is terminated, CONTRACTOR shall, within thirty (30) days thereafter, substitute another bond and surety, both of which must be acceptable to CITY.

**4.13 Payment of Subcontractors** CONTRACTOR shall pay all subcontractors, laborers, material suppliers and those performing services to CONTRACTOR on the project under this Agreement. CITY may, as a condition precedent to any payment hereunder, require CONTRACTOR to submit satisfactory evidence of payments of any and all claims of subcontractors, laborers, material suppliers, and those furnishing services to CONTRACTOR. Upon receipt of a lawful claim, CITY shall withhold money due to CONTRACTOR in a sufficient amount to pay the subcontractors, laborers, material suppliers, and those furnishing services to CONTRACTOR.

**4.14 Written Notice** Written notice shall be considered as served when delivered in person or sent by mail to the individual, firm, or corporation, or to the last business address of such known to CONTRACTOR who serves the Notice. Notice shall be sent as follows:

| TO CITY: | | TO CONTRACTOR: |
|---|---|---|
| Matt Smethurst, Project Manager | | Contact Person |
| City of Bloomington, Municipal Building | | Company Name |
| Post Office Box 100 | | Address |
| Bloomington, Indiana 47402 | | City, State Zip Code |

**4.15 Severability and Waiver** In the event that any clause or provision of this Agreement is held to be invalid by any court of competent jurisdiction, the invalidity of such clause or provision shall not affect any other provision of this Agreement. Failure of either party to insist on strict compliance with any provision of this Agreement shall not constitute waiver of that party's right to demand later compliance with the same or other provisions of this Agreement.

**4.16 Notice to Proceed** CONTRACTOR shall not begin the work pursuant to the "Scope of Work" of this Agreement until it receives an official written Notice to Proceed from the City Engineer. Contractor shall start active and continuous work on the contract within fifteen (15) calendar days after the date of the Notice to Proceed. In no case shall work begin prior to the date of the Notice to Proceed. If a delayed starting date is indicated in the proposal, the fifteen (15) calendar day limitation will be waived. Work day charges will then begin on a date mutually agreed upon, but not later than the delayed starting date specified. In the event that any contract is canceled after an award has been made but prior to the issuing of the Notice to Proceed, no reimbursement will be made for any expenses accrued relative to this contract during that period.

## 4.17 Steel or Foundry Products

4.17.01 To comply with Indiana Code 5-16-8, affecting all contracts for the construction, reconstruction, alteration, repair, improvement or maintenance of public works, the following provision shall be added: If steel or foundry products are to be utilized or supplied in the performance of any contract or subcontract, only domestic steel or foundry products shall be used. Should CITY feel that the cost of domestic steel or foundry products is unreasonable; CITY will notify CONTRACTOR in writing of this fact.

4.17.02 Domestic Steel products are defined as follows:

"Products rolled, formed, shaped, drawn, extruded, forged, cast, fabricated or otherwise similarly processed, or processed by a combination of two (2) or more of such operations, from steel made in the United States by open hearth, basic oxygen, electric furnace, Bessemer or other steel making process."

4.17.03 Domestic Foundry products are defined as follows:

"Products cast from ferrous and nonferrous metals by foundries in the United States."

4.17.04 The United States is defined to include all territory subject to the jurisdiction of the United States.

4.17.05 CITY may not authorize or make any payment to CONTRACTOR unless CITY is satisfied that CONTRACTOR has fully complied with this provision.

IN WITNESS WHEREOF, the parties of this Agreement have hereunto set their hands.

DATE: _____

| | |
|---|---|
| City of Bloomington<br>Department of Public Works | Company Name<br>Address<br>City, State Zip Code |
| BY: | BY: |
| _____<br>Justin D. Wykoff, Manager of Engineering Services | _____<br>Contractor Representative |
| _____<br>Susie Johnson, Director of Public Works | _____<br>Printed Name |
| _____<br>Mark Kruzan, Mayor of Bloomington | _____<br>Title of Contractor Representative |

# ATTACHMENT 'A'

"SCOPE OF WORK"

Vernal Pike and Crescent Road Intersection Improvements

***This project includes, but is not limited to the construction of new roadway, sidewalk, curbing, and landscaping per the plans and specifications. All work shall be completed as shown on the plans and specifications included with the Project Manual, and all other work (not mentioned in project manual) by the 2010 INDOT Specifications.***

# SECTION X

# SPECIFICATIONS

## INDEX TO CONSTRUCTION SPECIFICATIONS


| | | |
|---|---|---|
| **SECTION 01010** | **SUMMARY OF WORK** | **2** |
| **SECTION 01045** | **CUTTING AND PATCHING** | **5** |
| **SECTION 01050** | **FIELD ENGINEERING** | **6** |
| **SECTION 01340** | **SHOP DRAWINGS, PRODUCT DATA AND SAMPLES** | **8** |
| **SECTION 01630** | **SUBSTITUTIONS AND PRODUCT OPTIONS** | **10** |
| **SECTION 02110** | **SITE CLEARING** | **12** |
| **SECTION 02200** | **EARTHWORK** | **14** |
| **SECTION 02215** | **EXCAVATION** | **20** |
| **SECTION 02221** | **BACKFILLING** | **21** |
| **SECTION 02260** | **FINISH GRADING** | **23** |
| **SECTION 02485** | **SEEDING AND MULCHING** | **25** |
| **SECTION 02486** | **SODDING** | **27** |
| **SECTION 02511** | **CRUSHED STONE** | **29** |
| **SECTION 02513** | **ASPHALT CONCRETE PAVING** | **30** |
| **SECTION 02580** | **PAVEMENT MARKING** | **32** |
| **SECTION 02720** | **STORM SEWERAGE** | **34** |
| **SECTION 03300** | **CAST-IN-PLACE CONCRETE** | **38** |

## SECTION SUMMARY OF WORK

### PART 1 GENERAL

#### 1.01 WORK COVERED BY CONTRACT DOCUMENTS

A. All applicable requirements of the Project Manual, including Bidding Requirements, General and Supplemental Conditions, and General Requirements, apply to each section of the Specifications.

B. Project Location: East 3rd Street between Clarizz Blvd and Smith Road, Bloomington, Indiana.

C. Work consists of, but not limited to, furnishing all labor, tools, materials, transportation, and equipment necessary for the construction of an Asphalt multi-use pathway and all other work indicated on the drawings.

D. Contractor shall comply with all applicable laws, ordinances, rules, regulations and lawful orders of any public authority having jurisdiction for the safety of persons or property or to protect them from injury or loss. He shall erect and maintain, as required by existing conditions and progress of work, all reasonable safeguards for safety and protection including posting danger signs and other warnings against hazards. All requirements of the Occupational Safety and Health Act are to be followed explicitly and are the responsibility of the Contractor.

#### 1.02 INSPECTION OF SITE

A. All prospective Bidders are urged to visit the project site and to examine existing conditions and make note of any conditions, which may pertain to their work. Failure to do so will not relieve Bidder of responsibility in connection with his work.

1. See also, Instruction to Bidders.

#### 1.03 SALES TAX EXEMPTION

A. Owner is exempt from sales tax on products permanently incorporated in the work.

B. Obtain sales tax exemption certificate number from the Office of the City Controller, (812) 349-3412.

C. Upon completion of the work, file with the Owner, a notarized statement that all purchases made under exemption certificate were entitled to be exempt.

D. Pay legally assessed penalties for improper use of certificate number.

#### 1.04 CONTRACTOR'S USE OF PREMISES

A. Temporary Facilities.

1. Toilet facilities are not available.
2. Contractor will be responsible for obtaining all utilities necessary to perform their work.

B. Contract Limits.

1. Contract limits shall be restricted to those areas shown on plans.

C. Protection of Property.

1. Contractor shall provide adequate protection for portion of existing property where no new work occurs. Contractor shall assume all costs resulting from any damages.

#### 1.05 PARKING AND STORAGE

A. Parking areas for use of Contractor and his employees shall be on site.

B. Storage and staging areas will be as designated by the Engineer.

C. While the Owner may designate storage areas for temporary storage of material, the Owner cannot guarantee the security of items placed there by Contractor.

**1.06 OWNER OCCUPANCY**

A. The Contractor shall cooperate with Owner's Representative in all construction operations to minimize conflicts, and to facilitate owners of adjacent property.

B. Do not unreasonably encumber site with materials or equipment.

1. Unless streets, sidewalks, and other pathways are to be closed to traffic, Contractor is to provide for traffic control through the project.

C. Assume full responsibility for protection and safekeeping of products stored at work site.

**1.07 FINAL CLEAN-UP**

A. Remove all debris, rubbish, and unused materials. Repair all damaged surfaces.

B. Clean all finished surfaces by means of sweeping or as directed by the Engineer.

**1.08 CLOSE-OUT**

A. Owner's Representative and Contractor shall make a joint final inspection. Contractors to deliver a complete release of all liens up to any retained amount and clarify that all bills for labor and materials or services have been paid.

**1.09 PROTECTION**

A. Protect trees, shrubs, lawns, and other features to remain.

B. Protect existing structures, roads, sidewalks, paving and curbs that are to remain.

C. Repair damage to the satisfaction of the Engineer and in accordance with these Specifications.

D. All lawns that are damaged due to work operations shall be replanted with Sod.

E. Topsoil Fill For Damaged Areas: Natural, friable loam, typical of locality; free of subsoil, roots, grass, excessive amounts of weeds, stone and foreign matter; containing minimum of 4 percent and maximum of 25 percent organic matter.

F. Protect all traffic signs and markings designated to remain. All signs indicated to be removed shall be removed by the Owner upon proper notification.

**1.10 BASE BID**

A. This project shall include, but is not limited to the placement of a 6 foot 6 inch wide monolithic curb and sidewalk along the South side of Marilyn Drive per the plans and specifications. This shall include the placement of A.D.A. accessible ramps per the plans and specifications, and the installation of stormwater infrastructure according to the most recent set of City of Bloomington Utilities Specifications at the time of bidding. All other work shall be completed as shown on the plans and specifications included with this packet and by the 1999 INDOT Specifications for all other work not specifically listed in these plans and specifications. It shall be noted that INDOT Specifications to time and the computation of time are not followed with this project, and that a project completion deadline of October 5, 2010 has been set and clearly noted for this project

**1.11 ALTERNATES**

**1.12 SCHEDULING**

A. Project shall be completed within 60 calendar days from notice to proceed.

B. Contractor shall prepare a schedule of work for Owner's review prior to commencing work on the project.

1. Schedule shall indicate all construction activities and sequencing.

2. Include on schedule, all required submittals and shop drawings.

**1.13 GUARANTEE**

A. The Contractor shall guarantee in writing on his letterhead in four (4) copies that all labor, materials, and performances for a period of two (2) years from the date of acceptance.

**END OF SECTION**

# SECTION 01045 CUTTING AND PATCHING

## PART 1 GENERAL

### 1.01 REQUIREMENTS INCLUDED

A. Contractor shall be responsible for all cutting and patching as required to complete the work.

### 1.02 PREPARATION

A. Provide devises and methods to protect other portions of project from damage.

### 1.03 PERFORMANCE

A. Execute cutting and demolition by methods, which will present no damage to other work, and will provide surfaces to receive installation of repairs.
B. Execute fitting and adjustment of products to provide a finished installation to comply with specified products, functions, tolerances and finishes.
C. Restore work, which has been cut or removed; install new products to provide completed work in accordance with requirements of Contract Documents.

### 1.04 DUST PROTECTION

A. Contain dust from cutting operations by utilizing wet-cutting equipment.

## PART 2 PRODUCTS

### 2.01 MATERIALS

A. Unless otherwise noted on the plans, use materials of similar quality, color and finish to compliment or match existing.

## PART 3 EXECUTION

### 3.01 PREPARATION

A. Prepare existing surfaces to receive new materials.
B. Provide blocking or fillers where necessary for flush surfaces.

### 3.02 INSTALLATION

A. Install materials plumb, level, flush and true to line and grade.
B. Finish surfaces to blend in with existing to fully finished appearance.

**END OF SECTION**

# SECTION 01050 FIELD ENGINEERING

## PART 1 GENERAL

### 1.01 SUMMARY

A. General: This section specifies administrative and procedural requirements for field engineering services, including:
   1. 1. Land survey work.
   2. 2. Civil engineering services.

### 1.02 SUBMITTALS

A. Certificates:
   1. Submit a certificate signed by the Land Surveyor or Professional Engineer certifying that the location and elevation of improvements comply with the Contract Documents.

B. Project Record Documents:
   1. Submit a record of work performed and record survey data.

### 1.03 QUALITY ASSURANCE

A. Surveyor:
   1. Engage a Registered Land Surveyor registered in the State of Indiana, to perform land-surveying services required.

B. Engineer:
   1. Engage a Professional Engineer, as necessary, of the discipline required, registered in the State of Indiana, to perform required engineering services.

## PART 2 PRODUCTS (NOT APPLICABLE)

## PART 3 EXECUTION

### 3.01 EXAMINATION

A. The Owner will identify existing control points and property line corner stakes.

B. Verify layout information shown on the Drawings, in relation to the property survey and existing benchmark before proceeding to layout the work. Locate and protect existing benchmark and control points. Preserve permanent reference points during construction.

C. Do not change or relocate benchmark or control points without prior written approval. Promptly replace lost or destroyed project control points. Base replacements on the original survey control points.

D. Establish and maintain a minimum of two permanent benchmark on the site, referenced to data established by survey control points. Record benchmark locations, with horizontal and vertical data, on Project Record Documents.

E. Existing Utilities and Equipment:
   1. The existence and location of underground and other utilities and construction indicated as existing are not guaranteed.
   2. Before beginning sitework, investigate and verify the existence and location of underground utilities and other construction.

### 3.02 PERFORMANCE

A. Working from lines and levels established by the property survey, establish benchmark and markers to set lines and levels at each stage of construction and elsewhere as needed to

properly locate each element of the Project. Calculate and measure required dimensions within indicated or recognized tolerances. Do not scale drawings to determine dimensions.

B. Advise entities engaged in construction activities, of marked lines and levels provided for their use.

C. As construction proceeds, check every major element for line, level and plumb.

D. Surveyor's Log:

1. Maintain a surveyor's log of control and other survey work. Make this log available for reference.
2. Record deviations from required lines and levels, and advise the Engineer when deviations that exceed indicated or recognized tolerances are detected.
3. On Project Record Drawings, record deviations that are accepted and not corrected.

E. Site Improvements:

1. Locate and lay out site improvements, including pavements, stakes for grading, fill and topsoil placement by instrumentation and similar appropriate means.

F. Existing Utilities:

1. Furnish information necessary to adjust, move or relocate existing structures, utility poles, lines, services or other appurtenances located in, or affected by construction. Coordinate with local authorities having jurisdiction. Existing utilities include those utilities that have been installed during this project.

**END OF SECTION**

# SECTION 01340 SHOP DRAWINGS, PRODUCT DATA AND SAMPLES

## PART 1 GENERAL

### 1.01 REQUIREMENTS INCLUDED

A. Submit shop drawings, Product Data and Samples required by Contract Documents.
B. See individual Sections for specific requirements.

### 1.02 RELATED REQUIREMENTS

A. Definitions and Additional Responsibilities of Parties: Conditions of the Contract.
B. Designate in the construction schedule, or in a separate coordinated schedule, the dates for submissions and the dates that reviewed Shop Drawings, Product Data and Samples will be needed.

### 1.03 SHOP DRAWINGS

A. Drawings shall be presented in a clear and thorough manner.
B. Details shall be identified by reference to sheet and detail, as shown on Contract Drawings.

### 1.04 PRODUCT DATA

A. Preparation
   1. Clearly mark each copy to identify pertinent products or models.
   2. Show performance characteristics and capacities.
   3. Show dimensions and clearances required.
   4. Show wiring or piping diagrams and controls.
   5. Manufacturer's standard schematic drawings and diagrams:
B. Modify drawings and diagrams to delete information, which is not applicable to the work.
C. Supplement standard information to provide information specifically applicable to the work.

### 1.05 SAMPLES

A. Office samples shall be of sufficient size and quantity to clearly illustrate:
B. Functional characteristics of the product, with integrally related parts and attachment devices.
C. Full range of color, texture and pattern.

### 1.06 CONTRACTOR RESPONSIBILITIES

A. Review Shop Drawings, Product Data and Samples prior to submission.
B. Determine and verify:
   1. Field measurements.
   2. Field construction criteria.
   3. Catalog numbers and similar data.
   4. Conformance with specifications.
C. Coordinate each submittal with requirements of the work and of the Contract Documents.
D. Notify the Engineer in writing, at time of submission, of any deviations in the submittals from requirements of contract Documents.
E. Do not begin fabrication or work, which requires submittals until return of submittals with Engineer approval.

### 1.07 SUBMISSION REQUIREMENTS

A. Make submittals promptly in accordance with approved schedule, and in such sequence as to cause no delay in the Work or in the work of any other Contractor.

B. Number of submittals required:
   1. Shop Drawings: Submit number of opaque reproductions, which Contractor requires, plus two copies which will be retained by the Engineer.
   2. Product Data: Submit the number of copies, which the Contractor requires, plus two which will be retained by the Engineer.
   3. Samples: Submit the number stated in each specification section.

C. Submittals shall contain:
   1. The date of submission and the dates of any previous submissions.
   2. The Project title and number.
   3. Contract identification.
   4. The names of:
      a) Contractor
      b) Supplier
      c) Manufacturer
   5. Identification of the product with the specification section number.
   6. Field dimensions, clearly stated as such.
   7. Relation to adjacent or critical features of the work or materials.
   8. Applicable standards, such as ASTM or Federal Specification numbers.
   9. Identification of deviations from Contract Documents.
   10. Identification of revisions or re-submittals.
   11. An 8 inch by 3 inch blank space for Contractor and Engineer stamps.
   12. Contractor's stamp, initialed or signed, certifying to review of submittal, verification of products, field measurements and field construction criteria, and coordination of the information within the submittal with requirements of the work and Contract Documents.

**1.08 RESUBMISSION REQUIREMENTS**

A. Make any corrections or changes in the submittals required by the Engineer and resubmit until approved.

B. Shop Drawings and Product Data:
   1. Revise initial drawings or data, and resubmit as specified for the initial submittal.
   2. Indicate any changes that have been made other than those requested by the Engineer.

**1.09 DISTRIBUTION**

A. Distribute reproductions of Shop Drawings and copies of Product Data which carry the Engineer's stamp of approval to:
   1. Job site file.
   2. Subcontractors.

**1.10 ENGINEER'S DUTIES**

A. Review submittals with reasonable promptness and in accord with schedule.

B. Affix stamp and initials or signature, and indicate requirements for re-submittal, or approval of submittal.

C. Return submittals to Contractor for distribution, or for resubmission.

**END OF SECTION**

# SECTION 01630 SUBSTITUTIONS AND PRODUCT OPTIONS

## PART 1 GENERAL

### 1.01 REQUIREMENTS INCLUDED

A. Furnish and install products specified under options and conditions for substitutions stated in this Section.

### 1.02 PRODUCTS LIST

A. Within 30 days after award of Contract, submit to Engineer, five copies of complete list of major products, which are proposed for installation.
B. Tabulate products by specification section number and title.
C. For products specified only by reference standards, list for each such product:
   1. Name and address of Manufacturer.
   2. Trade name.
   3. Model or catalog destination.
   4. Manufacturer's data.
   5. Reference standards.
   6. Performance test data.

### 1.03 CONTRACTOR'S OPTIONS

A. For products specified by reference standard, select product meeting that standard, by any Manufacturer.
B. For products specified by naming several products or Manufacturers, select any one of products and Manufacturers named which complies with Specifications.
C. For products specified by naming one or more products or Manufacturers and stating "or equal", submit a request as for substitutions, for any product or Manufacturer which is not specifically named.
D. For products specified by naming only one product and Manufacturer, there is no option and no substitution allowed.
E. Approval and determination of quality is vested in the Owner and Engineer, whose decision is final and binding upon all concerned. Should it be determined that the substituted product is not equal to the product specified, the Owner and Engineer have a right to choose either the product specified or one of equal quality without cost to the Owner.

### 1.04 SUBSTITUTIONS

A. Within a period of 30 days after award of Contract, Engineer will consider formal requests from the Contractor for substitution of products in place of those specified.
B. After the end of that period, requests will be considered only in the case of product unavailability or other conditions beyond the control of the Contractor.
C. Submit a separate request for each substitution. Support each request with:
   1. Complete data substantiating compliance of proposed substitution with requirements stated in Contract Documents:
   2. Product identification, including Manufacturer's name and address.
   3. Manufacturer's literature; identify:
   4. Product description.
   5. Reference standards.
   6. Performance and test data.
   7. Samples, as applicable.

8. Name and address of similar projects on which product has been used, and date of each installation.
9. Itemized comparison of the proposed substitution with product specified; list significant variations.
10. Data relating to changes in construction schedule.
11. Any effect of substitution on separate contracts.
12. List any changes required in other work or products.
13. Accurate cost data comparing proposed substitutions with product specified.
14. Amount of any net change to Contract sum.
15. Designation of required license fees or royalties.
16. Designation of availability of maintenance services and sources of replacement materials.

D. Substitutions will not be considered for acceptance when:
1. They are indicated or implied on shop drawings or product data submittals without a formal request from Contractor.
2. They are requested directly from a Subcontractor or Supplier.
3. Acceptance will require substantial revision of Contract Documents.

E. Substitute products shall not be ordered or installed without written acceptance of the Engineer.

F. The Engineer will determine acceptability of proposed substitutions.

**1.05 CONTRACTOR'S REPRESENTATION**

A. In making formal request for substitution, Contractor represents that:
1. He has investigated proposed product and has determined that it is equal to or superior in all respects to that specified.
2. He will provide same warranties or bonds for substitution as for product specified.
3. He will coordinate installation of accepted substitution into the work and will make such changes as may be required for the work to be complete in all respects.
4. He waives claims for additional costs caused by substitution which may subsequently become apparent.
5. Cost data is complete and includes related costs under his contract, but not:
a) Costs under separate contracts.
b) Engineer's costs for redesign or revision of Contract Documents.

**1.06 ENGINEER'S DUTIES**

A. Review Contractor's requests for substitutions with reasonable promptness.

B. Notify Contractor, in writing, of decision to accept or reject requested substitutions.

**END OF SECTION**

# SECTION 02110 SITE CLEARING

## PART 1 GENERAL

### 1.01 WORK INCLUDED

A. Clear areas shown on the accompanying drawings and specifications therein.
B. Remove surface debris, gravel, and soil.
C. Remove concrete and asphalt.
D. Remove sanitary and storm sewers.
E. Remove trees noted to be removed or necessary to complete the work as shown.
F. All materials and site elements to be excavated or demolished will be removed off site to an approved landfill or recycled.

### 1.02 RELATED WORK

A. Section 01045 - Cutting and Patching
B. Section 02200 - Earthwork
C. Section 02215 - Excavation
D. Section 02260 - Finish Grading

### 1.03 UTILITIES

A. Notify the Owner and the Engineer in advance of any utilities needing to be disconnected.

## PART 2 NOT USED

## PART 3 EXECUTION

### 3.01 CLEARING

A. Remove unsatisfactory soil materials, stones, obstructions, deleterious material and debris from ground surface prior to placement of new work.

### 3.02 TREE AND PLANT PROTECTION

A. Before any work is begun, or any equipment is moved onto site, the Owner's Representative and Contractor will inspect the site to verify trees, shrubs, and bushes which are to be protected, pruned, relocated or removed.
B. Preserve and protect existing trees and plants at site, which are designated to remain, and those adjacent to site.
C. Consult with the Owner, and remove agreed on trees, roots, branches and stumps, which interfere with the construction. Employ qualified tree surgeon to remove and to treat cuts. Saw cut roots 1" diameter or larger and treat with Pruning Paint.
D. Protect root zones of trees and plants:
   1. Do not allow vehicular traffic or parking.
   2. Do not store materials or products.
   3. Prevent dumping of refuse or chemically injurious materials or liquids.
   4. Prevent puddling or continuous running water.
   5. Carefully supervise excavating, grading, filling, and subsequent construction operations, to prevent damage.
E. Existing trees and shrubs that are damaged or die as a result of construction shall be suitably repaired or replaced with plant material of same kind and size or as approved by Owner. Low hanging branches and unsound or unsightly branches on trees and shrubs designated to remain shall be pruned as required and directed by Owner's Representative.

**3.03 REMOVAL**

A. Completely remove barricades, including foundations, when construction has progressed to the point that they are no longer needed, and when approved by Owner's Representative.

B. Remove stumps and roots, on trees and shrubs indicated to be removed, to a depth of 24 inches.

C. Clean and repair damage caused by installation, fill and grade areas of the site to required elevations and slopes, clean the area, and remove debris from the site.

**END OF SECTION**

# SECTION 02200 EARTHWORK

## PART 1 GENERAL

### 1.01 RELATED DOCUMENTS

A. Drawings and General Provisions of the Contract, including General and Supplementary Conditions and Division 1 Specification Sections, apply to this Section.

B. Related Sections: The following Sections contain requirements that relate to this Section.

1. Division 2 Section "Site Clearing" for site stripping, grubbing, topsoil removal, and tree protection.

### 1.02 SUMMARY

A. This section includes the following:

1. Preparing and grading subgrades for slabs-on-grade, walks, pavements, and landscaping.
2. Excavating and backfilling for structures.
3. Sub-base course for walks and pavements.
4. Excavating and backfilling trenches within building lines.
5. Excavating and backfilling for underground mechanical and electrical utilities and appurtenances.

### 1.03 DEFINITIONS

A. Excavation consists of the removal of materials encountered to subgrade elevations and reuse or disposal of materials removed.

B. Subgrade: The uppermost surface of an excavation or the top surface of a fill or backfill immediately below sub-base, drainage fill, or topsoil materials.

C. Borrow: soil material obtained off-site when sufficient approved soil material is not available from excavations.

D. Sub-base Course: The layer placed between the subgrade and base course in paving system or the layer placed between the subgrade and surface of a pavement or walk.

E. Base Course: The layer placed between the sub-base and surface pavement in a paving system.

F. Unauthorized excavation consists of removing materials beyond indicated subgrade elevations or dimensions without direction by the Engineer. Unauthorized excavation, as well as remedial work directed by the Engineer, shall be at the Contractor's expense.

G. Structures: Manholes, buildings, footings, foundations, retaining walls, slabs, tanks, curbs, mechanical and electrical appurtenances, or other man-made stationary features constructed above or below ground surfaces.

H. Utilities include on-site underground pipes, conduits, ducts, and cables, as well as underground services within building lines.

### 1.04 PROJECT CONDITIONS

A. Existing Utilities: Do not interrupt existing utilities serving facilities occupied by the owner or others except when permitted in writing by the Owner and then only after acceptable temporary utility services have been provided.

B. Provide a minimum 48-hours' notice to the Owner and receive written notice to proceed before interrupting any utility.

C. Demolish and completely remove from site existing underground utilities indicated to be removed. Coordinate with Owner to shutoff services if lines are inactive.

## PART 2 PRODUCTS

### 2.01 SOIL MATERIALS

A. General: Provide approved borrow soil materials from off-site when sufficient approved soil materials are not available from excavations.

B. Satisfactory Soil Materials: ASTM D 2487 soil classification groups GW, GP, GM, SW, SP and SM; free of rock or gravel larger than 2 inches in any dimension, debris, waste, frozen materials, vegetation and other deleterious matter.

C. Unsatisfactory Soil Materials: ASTM D 2487 soil classification groups GC, SC, ML, MH, CL, CH, OH, and PT.

D. Backfill and Fill Materials: Satisfactory soil materials.

E. Sub-base and Base Materials: Naturally or artificially graded mixture of natural or crushed gravel, crushed stone, and natural or crushed sand, ASTM D 2940, with at least 95 percent passing a 1-1/2 inch sieve and not more than 8 percent passing a No. 200 sieve or as noted otherwise on drawings.

F. Engineered Fill: sub-base or base materials.

G. Bedding Material: Sub-base or base materials with 100 percent passing a 1-inch sieve and not more than 8 percent passing a No. 200 sieve.

H. Impervious Fill: Clayey gravel and sand mixture capable of compacting to a dense state.

## PART 3 EXECUTION

### 3.01 PREPARATION

A. Protect structures, utilities, sidewalks, pavements, and other facilities from damage caused by settlement, lateral movement, undermining, washout, and other hazards created by earthwork operations.

B. Protect subgrades and foundation soils against freezing temperatures or frost. Provide protective insulating materials as necessary.

C. Provide erosion control measures to prevent erosion or displacement of soils and discharge of soil-bearing water runoff or airborne dust to adjacent properties and walkways.

D. Tree protection is specified in Division 2 Section "Site Clearing".

### 3.02 DEWATERING

A. Prevent surface water and subsurface or ground water from entering excavations, from ponding on prepared subgrades, and from flooding Project site and surrounding area.

B. Protect Subgrades and foundation soils from softening and damage by rain or water accumulation.

### 3.03 EXPLOSIVES

A. Do not use explosives.

### 3.04 STABILITY OF EXCAVATIONS

A. Comply with all codes, ordinances, and requirements of authorities having jurisdiction to maintain stable excavations.

### 3.05 EXCAVATION FOR STRUCTURES

A. Excavate to indicated elevations and dimensions within a tolerance of plus or minus 0.10 foot. Extend excavations a sufficient distance from structures for placing and removing concrete formwork, installing services and other construction, and for inspections.

B. Excavations for Footings and Foundations: Do not disturb bottom of excavation. Excavate by hand to final grade just before placing concrete reinforcement. Trim bottoms to required lines and grades to leave solid base to receive other work.

**3.06 EXCAVATION FOR WALKS AND PAVEMENTS**

A. Excavate surfaces under walks and pavements to indicated cross sections, elevations, and grades.

**3.07 EXCAVATION FOR UTILITY TRENCHES**

A. Excavate trenches to indicated slopes, lines, depths and invert elevations.

B. Excavate trenches to uniform width to provide a working clearance on each side of pipe or conduit. Excavate trench walls vertically from trench bottom to 12 inches higher than top of pipe or conduit, unless otherwise indicated.

C. Clearances: As indicated.

D. Trench Bottoms: Excavate and shape trench bottoms to provide uniform bearing and support of pipes and conduit. Shape subgrade to provide continuous support for bells, joints, and barrels of pipes and for joints, fittings, and bodies of conduits. Remove stones and sharp objects to avoid point loading.

E. For pipes or conduit less than 6 inches in nominal diameter and flat-bottomed, multiple-duct conduit units, hand-excavate trench bottoms and support pipe and conduit on an undisturbed subgrade.

F. For pipes and conduit 6 inches or larger in nominal diameter, shape bottom of trench to support bottom 90 degrees of pipe circumferences. Fill depressions with tamped sand backfill.

G. Where encountering rock or another unyielding bearing surface, carry trench excavation 6 inches below invert elevation to receive bedding course.

**3.08 APPROVAL OF SUBGRADE**

A. Notify engineer when excavations have reached required subgrade.

B. When the Engineer determines that unforeseen unsatisfactory soil is present, continue excavation and replace with compacted backfill or fill material as directed by the Engineer.

C. Reconstruct subgrades damaged by freezing temperatures, frost, rain, accumulated water, or construction activities, as directed by the Engineer.

**3.09 APPROVAL OF SUBGRADE**

A. Fill unauthorized excavation under foundations or wall footings by extending indicated bottom elevations of concrete foundation or footing to excavation bottom, without altering required top elevation. Lean concrete fill may be used to bring elevations to proper position when acceptable to the Engineer.

B. Where indicated widths of utility trenches are exceeded, provide stronger pipe, or special installation procedures, as required by the Engineer.

**3.10 STORAGE OF SOIL MATERIALS**

A. Stockpile excavated materials acceptable for backfill and fill soil materials, including acceptable borrow materials. Stockpile soil materials without intermixing. Place, grade, and shape stockpiles to drain surface water. Cover to prevent wind-blown dust.

B. Stockpile soils materials away from edge of excavations. Do not store within drip line of remaining trees.

**3.11 BACKFILL**

A. Backfill excavations promptly, but not before completing the following:

1. Acceptance of construction below finish grade.
2. Surveying locations of underground utilities for record documents.
3. Testing, inspecting, and approval of underground utilities, unless noted otherwise.
4. Concrete formwork removal.
5. Removal of trash and debris from excavation.
6. Removal of temporary shoring and bracing, and sheeting.

**3.12 UTILITY TRENCH BACKFILL**

A. Place and compact bedding course on rock and other unyielding bearing surfaces and to fill unauthorized excavations. Shape bedding course to provide continuous support for bells, joints, and barrels of pipes and for joints, fittings, and bodies of conduits.

B. Place and compact initial backfill of satisfactory material or sub-base material, free of particles larger than 1 inch, to a height of 12 inches over the utility pipe of conduit.

C. Carefully compact material under pipe haunches and bring backfill evenly up on both sides and along the full length of utility piping or conduit to avoid damage or displacement of utility system.

D. Coordinate backfilling with utilities testing.

E. Fill voids with approved backfill materials as shoring and bracing, and sheeting is removed.

F. Place and compact final backfill of satisfactory soil material to final subgrade.

**3.13 FILL**

A. Preparation: Remove vegetation, topsoil, debris, wet, and unsatisfactory soil materials, obstructions, and deleterious materials from ground surface prior to placing fills.

B. Plow strip, or break up sloped surfaces steeper than 1 vertical to 4 horizontal so fill material will bond with existing surfaces.

C. When subgrade or existing ground surface to receive fill has a density less than that required for fill, break up ground surface to a depth required, pulverize, moisture-condition or aerate soil and re-compact to required density.

D. Place fill material in layers to required elevations for each location listed below.
   1. Under grass, use satisfactory excavated or borrow soil material.
   2. Under walks and pavements, use sub-base or base material, or satisfactory excavated or borrow soil material.
   3. Under steps and ramps, use sub-base material.
   4. Under structures, footings and foundations, use engineered fill.

**3.14 MOISTURE CONTROL**

A. Uniformly moisten or aerate subgrade and each subsequent fill or backfill layer before compaction to within 2 percent of optimum moisture content.

B. Do not place backfill or fill material on surfaces that are muddy, frozen, or contain frost or ice.

C. Remove and replace, scarify and air-dry satisfactory soil material that is too wet to compact to specified density.

D. Stockpile or spread and dry removed wet satisfactory soil material.

**3.15 COMPACTION**

A. Place backfill and fill materials in layers not more than 8 inches in loose depth for material compacted by heavy compaction equipment, and not more than 4 inches in loose depth for materials compacted by hand operated tampers.

B. Place backfill and fill materials evenly on all sides of structures to required elevations. Place backfill and fill uniformly along the full length of each structure.

C. Percentage of Maximum Dry Density Requirements: Compact soil to not less than the following percentages of maximum dry density according to ASTM D 1557:

1. Under structures, building slabs, steps, and pavements, compact the top 12 inches below subgrade and each layer of backfill or fill material at 95 percent maximum dry density.
2. Under walkways, compact the top 6 inches below subgrade and each layer of backfill or fill material at 95 percent maximum dry density.
3. Under lawn or unpaved areas, compact the top 6 inches below subgrade and each layer of backfill or fill material at 90 percent maximum dry density.

**3.16 GRADING**

A. General: Uniformly grade areas to a smooth surface, free from irregular surface changes. Comply with compaction requirements and grade to cross sections, lines and elevations indicated.
B. Provide a smooth transition between existing adjacent grades and new grades.
C. Cut out soft spots, fill low spots, and trim high spots to conform to required surface tolerances.
D. Site Grading: Slope grades to direct water away from buildings and to prevent ponding. Finish subgrades to required elevations within the following tolerances:
   1. Walks: Plus or minus 0.10 foot.
   2. Lawn or Unpaved Areas: Plus or minus 0.10 foot.

**3.17 SUB-BASE AND BASE COURSES**

A. Under pavements and walks, place sub-base course material on prepared subgrades. Place base course material over sub-base to pavements.
B. Compact sub-base and base courses at optimum moisture content to required grades, lines, cross section and thickness to not less than 95 percent of ASTM D 4254 relative density.
C. Shape sub-base and base to required crown elevations and cross-slope grades.
D. When thickness of compacted sub-base of base course is 6 inches or less, place materials in a single layer.
E. When thickness of compacted sub-base of base course exceeds 6 inches, place materials in equal layers, with no layer more than 6 inches thick or less than 3 inches thick when compacted.

**3.18 PROTECTION**

A. Protecting Graded Areas: Protect newly graded areas from traffic, freezing, and erosion. Keep free of trash and debris.
B. Repair and re-establish grades to specified tolerances where completed or partially completed surfaces become eroded, rutted, settled, or loose compaction due to subsequent construction operations or weather conditions.
C. Scarify or remove and replace material to a depth directed by the Engineer; reshape and re-compact at optimum moisture content to the required density.
D. Settling: Where settling occurs during the Project correction period, remove finished surfacing, backfill with additional approved material, compact, and reconstruct surfacing.
E. Restore appearance, quality, and condition of finished surfacing to match adjacent work and eliminate evidence of restoration to the greatest extent possible.

**3.19 DISPOSAL OF SURPLUS AND WASTE MATERIALS**

A. Disposal: Transport surplus satisfactory soil to designated storage areas on the Owner's property. Stockpile or spread soil as directed by the Engineer.
B. Remove waste material, including unsatisfactory soil, trash, and debris, and legally dispose of it off the owner's property.

**END OF SECTION**

# SECTION 02215 EXCAVATION

## PART 1 GENERAL

### 1.01 WORK INCLUDED

A. Excavation for utilities, curbs, wall footings, light bases, storm drains, and other improvements.
B. Additional work as indicated on drawings.

### 1.02 RELATED WORK

A. Section 02200: Earthwork: Topsoil and subsoil removal from site surface.
B. Section 02220: Backfilling.
C. Section 02260: Finish Grading.

### 1.03 PROTECTION

A. Protect excavations by shoring, bracing, sheet piling, underpinning or other methods required to prevent cave-in or loose soil from falling into excavation.
B. Notify Owner of unexpected subsurface conditions and discontinue affected work in area until notified to resume work.
C. Protect bottom of excavations and soil adjacent to and beneath foundations from frost.
D. Grade excavation top perimeter to prevent surface water run-off into excavation.

## PART 2 PRODUCTS

### 2.01 MATERIALS

A. Subsoil: Excavated material, graded free of lumps larger than 6 inches, rocks larger than 3 inches and debris.

## PART 3 EXECUTION

### 3.01 PREPARATION

A. Identify required lines, levels, contours and datum.
B. Maintain and protect existing utilities remaining which pass through work area.

### 3.02 EXCAVATION

A. Excavate subsoil and loose rock required for installation of site elements.
B. Excavate to working elevations.
C. Remove lumped subsoil, boulders, and rock up to 1/3 cu. yd. measured by volume.
D. Correct unauthorized excavation at no cost to Owner.
E. Stockpile excavated material in area designated on site and remove excess subsoil not being reused from site.

### 3.03 FIELD QUALITY CONTROL

A. Provide for visual inspection of bearing surfaces.

**END OF SECTION**

# SECTION 02221 BACKFILLING

## PART 1 GENERAL

### 1.01 WORK INCLUDED

A. Site Backfilling
B. Compaction requirements
C. Fill under slab-on-grade.

### 1.02 RELATED WORK

A. Section 02200 – Earthwork.
B. Section 02215 – Excavation.
C. Section 02260 – Finish Grading: Final backfilling of topsoil.

## PART 2 PRODUCTS

### 2.01 FILL MATERIALS

A. Granular Fill: No. 53 stone.
B. Subsoil: Reused; free of lumps larger than 4 inches, rocks larger than 2 inches and debris.
C. Topsoil in accordance with Section 02260

## PART 3 EXECUTION

### 3.01 INSPECTION

A. Verify stockpiled fill to be reused is approved.
B. Verify areas to be backfilled are free of debris, snow, ice, or water and ground surfaces are not frozen.
C. Areas to be backfilled shall be inspected and approved by the Engineer prior to backfilling.

### 3.02 PREPARATION

A. When necessary, compact subgrade surfaces to density requirements for backfill material.
B. Cut out soft areas of subgrade not readily capable of compaction. Backfill with appropriate type fill as called for. Compact to density equal to requirements for subsequent backfill material.

### 3.03 BACKFILLING

A. Backfill areas to contours and elevations. Use unfrozen materials.
B. Backfill systematically, as early as possible, to allow maximum time for natural settlement. Do not backfill over porous, wet, or spongy subgrade surfaces.
C. Place and compact crushed stone fill materials in continuous layers not exceeding 6 inches loose depth.
D. Place and compact subsoil fill material in continuous layers not exceeding 8 inches loose depth.
E. Maintain optimum moisture content of backfill materials to attain required compaction density.
F. Make changes in grade gradual. Blend slopes into level areas.
G. Remove surplus backfill materials from site.
H. Leave stockpile areas completely free of excess fill materials.

**3.04 SCHEDULE OF LOCATIONS**

A. The paragraphs below identify location, fill material to be used identified from lower to upper fill type, compacted thickness of each fill, and compaction expressed as a percentage of maximum density and optimum moisture in comparison with ANSI/ASTM D 1557 and D 698.

1. Fill under grasses areas: Subsoil fill, to 6 inches below finish grade, compacted to 88 percent.
2. Fill under asphalt and concrete: compacted to 95 percent.

**END OF SECTION**

# SECTION 02260 FINISH GRADING

## PART 1 GENERAL

### 1.01 WORK INCLUDED

A. Finish grade sub-soil.
B. Replenish topsoil in areas where clearing has been completed and not scheduled to receive new base course materials.
C. Place, finish grade, and compact topsoil.

### 1.02 RELATED WORK

A. Section 02200: Earthwork
B. Section 02485: Seeding and Mulching
C. Section 02486: Sodding

### 1.03 PROTECTION

A. Prevent damage to existing features. Correct damage at no cost to the Owner.

## PART 2 PRODUCTS

### 2.01 MATERIALS

A. Existing topsoil on site: Existing topsoil shall be removed where advantageous. This soil may be reused for lawns and plantings provided that it meets the topsoil requirements below.
   1. Topsoil: Friable loam free from subsoil, roots, grass, excessive amount of weeds, stones and foreign matter; acidity range pH of 6.0 to 7.0; containing a minimum of 6% and a maximum of 25% organic matter; soluble salts shall be higher than 500 parts per million.
   2. Lime: Shall be ground limestone containing not less than 85% passing through a 100-mesh sieve and 90% passing through a 20-mesh sieve.

### 2.02 TESTING

A. Soil sample tests: The Landscape Contractor shall take three representative samples from the topsoil source and submit them for soil tests. If the pH range of topsoil is not between 6.0 and 7.0, then it shall be amended by the Landscape Contractor according to the guide below or the Landscape Contractor may select another topsoil source and submit new soil sample tests.
   1. If the pH level is below 6.0, add limestone at a rate of 2.5 lbs. per cubic yard or 92 lbs. Per 1,000 square feet to raise pH one full point.
   2. If the pH level is above 7.0, add aluminum sulfate at a rate of 2.5 lbs. Per cubic yard or 92 lbs. Per 1,000 square feet to lower pH one full point.
B. All testing sill be at the Contractor's expense.

## PART 3 EXECUTION

### 3.01 SUB-SOIL PREPARATION

A. Rough grade subsoil systematically to allow for a maximum amount of settlement and compaction. Eliminate uneven areas and low spots. Remove debris, roots, branches, stones, etc. Remove subsoil which has been contaminated with petroleum products.

B. Excavate and fill where necessary to bring sub-soil to required levels, profiles and contours. Make changes in grade gradual. Blend slopes into level areas.

C. Cultivate sub-grade to depth of 6 inches where topsoil is to be placed. Repeat cultivation in areas where equipment used for hauling and spreading topsoil has compacted subsoil.

D. Compact materials to meet the following minimum percentages of modified proctor density, ASTM D1557, method C or D. Compact subsoil to the following:

1. 88% where topsoil is to be placed.
2. 95% where stabilizing base for asphalt and concrete is to be placed.

**3.02 PLACING TOPSOIL**

A. Use topsoil in relatively dry state. Place during dry weather.

B. Fine grade topsoil eliminating rough or low areas to ensure positive drainage. Maintain levels, profiles and contours of sub-grades.

C. Remove stone, roots, grass, weeds, debris and other foreign material while spreading.

D. Manually spread topsoil around trees to prevent damage which may be caused by grading equipment.

E. Lightly compact placed topsoil.

**3.03 SURPLUS MATERIAL**

A. Remove surplus subsoil and topsoil from site.

B. Leave stockpile areas and entire job site clean and raked, ready to receive landscaping.

**END OF SECTION**

# SECTION 02485 SEEDING AND MULCHING

## PART 1 GENERAL

### 1.01 WORK INCLUDED

A. This work shall consist of either or both plain and mulched seeding. It includes furnishing and placing seed, fertilizer, inoculants, top soil, and mulch, if required, in a prepared seed bed or furnishing and placing sod at locations shown on the plans, or as directed.

### 1.02 RELATED WORK

A. Section 02260 – Finish Grading

## PART 2 PRODUCTS

### 2.01 MATERIALS

A. Seed mixtures shall be classified as follows. Mixes including warm season grasses, forbs, or aquatic species will be specified in the plans.

B. Seed Mixture R.

1. This is a general purpose seed mixture. It shall be applied at the rate of 170 lb/acre. The mixture shall consist of 95 lb of low endophyte Kentucky 31 Fescue or approved equal, 65 lb perennial rye grass, and 10 lb Jasper Red Fescue or approved equal.

C. Materials shall be in accordance with the following Indiana Department of Transportation Standard Specification (INDOTSS).

| | | | |
|---|---|---|---|
| 1. | Fertilizer | 914.03 | |
| 2. | Grass Seed | | 914.04 |
| 3. | Leguminous Inoculants | 914.06 | |
| 4. | Mulch | | 914.05(a), 914.05(c),914.05(d),914.05(e) |
| 5. | Plastic Net | | 914.09(g) |
| 6. | Top Soil | 914.01 | |
| 7. | Water | | 914.09(a) |
| 8. | Wire Staples | | 914.09(f) |

## PART 3 EXECUTION

### 3.01 PREPARATION OF GROUND BEFORE SEEDING

A. The area to be seeded shall be made smooth and uniform and shall be in accordance with the finished grade and cross section shown on the plans or as otherwise designated.

B. The seed bed, if not loose, shall be loosened to a minimum depth of 6 in. before fertilizer or seed is applied.

C. Areas to be covered with topsoil shall be milled or disked slightly before the topsoil is placed. A disk, spike-toothed harrow, or other similar device may be used for this purpose. Such loosening will be required to ensure bond of the topsoil with the surface on which it is put and to form a uniform surface. The topsoil shall then be spread to a sufficient depth to produce the thickness specified after it has been compacted lightly with an approved roller, tamping device, or other method.

### 3.02 PREPARATION OF GROUND BEFORE APPLYING EROSION CONTROL BLANKETS

A. Prior to placing the blankets, the area to be covered shall be relatively free of all rocks or clods over 1.5 in. in diameter, and all sticks or other foreign material.

**3.03 APPLYING FERTILIZER**

A. Fertilizer as specified shall be spread uniformly over the area to be seeded. Fertilizer shall be spread at the rate of 800 lb/acre unless otherwise specified.

**3.04 APPLYING SEED**

A. Seed may be drilled in or mixed with water. The mixture shall be sprayed over the area to be seeded. An approved mechanical method which shall place the seed in direct contact with the soil may be used.

B. In places inaccessible to mechanical equipment, or where the area to be seeded is small, a hand operated cyclone seeder or other approved equipment may be used.

C. Seed of warm season grasses, forbs, or aquatic species shall not be covered more than 0.125 in.. All other seed shall not be covered more than 0.5 in.. Leguminous seeds, unless otherwise specified, shall be inoculated with a culture in accordance with 914.06 Indiana Department of Transportation Standard Specification (INDOTSS).

**3.05 APPLYING MULCH**

A. Mulching material shall be applied uniformly in a continuous blanket at the rate of 2 tons per acre. Mulch shall be placed within 24 h after seeding.

B. The mulch may be held in place by means of a commercially produced mulch binder or by spraying it with a satisfactory liquid asphalt or asphalt emulsion or by other means if approved by the Engineer.

**END OF SECTION**

# SECTION 02486 SODDING

## PART 1 GENERAL

### 1.01 WORK INCLUDED

A. Prepare sub-grade to receive topsoil.
B. Place, rake and level topsoil as required to prepare for sod.
C. Place sod.
D. Maintain sod.

### 1.02 RELATED WORK

A. Section 02260 – Finish Grading

## PART 2 PRODUCTS

### 2.01 MATERIALS

A. Sod: Shall be fibrous, well-rooted Warren's Frontrunner turf-type tall Fescue Sod, complying with ASPA Specifications, and nursery grown on clay loam soil. Sod shall not be grown on peat soil. Sod shall be free from stones, weeds, undesirable native grasses, and burned or bare spots. Edges of sod to be cleanly and unevenly cut to a uniform width of not less than 18 inches and thickness of not less than 1-1/2 inches. Grass shall be cut to a height of not more than 2 inches. Sod shall be properly protected from drying out and shall be laid within 48 hours after cutting at the nursery.
B. Topsoil: Fertile, agricultural soil typical of locality and capable of sustaining vigorous plant growth; from well drained site that is free of flooding; free from admixture of subsoil, slag or clay, stones, lumps, live plants and their roots, sticks and other extraneous matter; pH value of minimum 5.9 and maximum 7.0 and as specified in Section 02260.
C. Fertilizer: Commercial slow release type recommended for grass, with fifty percent of the elements derived from organic sources; to the following proportions: nitrogen 10%, phosphoric acid 8%, soluble potash 4%.

## PART 3 EXECUTION

### 3.01 NOTIFICATION

A. The Contractor shall be notified when other divisions of the work have progressed sufficiently to commence work on the lawn areas. Upon receipt of such notice, he/she shall commence placing topsoil to finish grade. Thereafter the finished grade shall be maintained through completion of the lawns. He/she shall be responsible for notifying and insuring that this final grade is not disturbed by other contractors working at the site. Sodding limits shall be as shown on bid plans unless otherwise approved in writing. No payment shall be made for sod installed outside existing limits, or without receiving prior approval.

### 3.02 PREPARATION OF LAWN AREAS

A. Refer to plans for location of sodden areas.
B. The Landscape Contractor shall inspect the prepared subgrade to insure the elevation is parallel with the desired finished grade and that the subgrade is uniformly compacted. Report any defects to the Owner's Representative before beginning placement of any topsoil.
C. After the subgrade has been determined to be satisfactory, the placement of topsoil may commence. The topsoil shall be spread evenly on the subgrade and lightly compacted. No

topsoil shall be spread in a frozen or muddy condition. Areas to be sodded shall be brought to finished grade and raked smooth.

D. All uneven surfaces shall be raked until a uniform surface is established. All stones over ¾ inches shall be raked out and removed from the site. Areas to be sodded shall be brought to within the thickness of sod to the finished grade. Allowance for settlement shall be made in either case.

**3.03 APPLYING LIME**

A. Lime shall be added at the rate indicated in "Soil Sample Tests", Section 02260, and when added shall be thoroughly mixed in the soil prior to placing the soil on the site.

**3.04 APPLYING FERTILIZER**

A. Fertilizer shall be applied at the rate of 25 pounds to 1,000 square feet to all areas being prepared for lawn; however, this rate may be increased, at the direction of the Landscape Architect, based upon the analysis of the soil sample tests.

**3.05 RECONDITIONING LAWNS**

A. Use sod to recondition existing lawn areas damaged by Contractor's operations including storage of materials or equipment and movement of vehicles.

**3.06 LAYING SOD**

A. Before any sod is laid, all soft spots and inequalities in grade shall be corrected. Fertilizer spread shall be raked in. The first row of sod shall be laid in a straight line with subsequent rows placed parallel to and tightly against each other. Lateral joints shall be staggered to promote more uniform growth and strength. Care shall be exercised to insure the sod is not stretched or overlapped and that all joints are butted tight, in order to prevent voids, which would cause air drying of the roots.

B. On 3:1 rounded slopes or greater, sod shall be laid with staggered joints and secured by wood peg and tamping.

C. The Landscape Contractor shall water sod immediately after transplanting to prevent excessive drying during progress or work. As sodding is completed in any one section, the entire area shall be rolled. It shall then be thoroughly watered to a depth sufficient that the underside of the new sod pad and soil immediately below are thoroughly wet. The Contractor shall be responsible for having adequate water available at the site prior to and during the transplanting of the sod.

**3.07 INSPECTION AND MAINTENANCE**

A. Maintenance shall begin immediately after each portion of lawn is planted. Maintenance prior to inspection shall be the Contractor's responsibility. A two to three (2-3) day notice shall be given to the Owner indicating an inspection/approval date. After inspection and acceptance by Owner, all maintenance shall be taken over by Owner.

B. Lawns shall be protected and maintained by watering, weeding, mowing and replanting as necessary until acceptance by Owner.

C. The Landscape Contractor shall provide adequate protection during installation in all lawn areas, against trespassing and damage, including erosion.

D. Damage to the lawn areas due to vandalism or on the part of others prior to occupancy or acceptance by the Owner will be the responsibility of the Contractor.

**END OF SECTION**

# SECTION 02511 CRUSHED STONE

## PART 1 GENERAL

### 1.01 WORK INCLUDED

A. Crushed stone.

### 1.02 STANDARD SPECIFICATION

A. Indiana Department of Transportation Standard Specification (INDOTSS).

## PART 2 PRODUCTS

### 2.01 PAVING MATERIALS

A. Aggregate materials shall conform to the requirements of Section 904, INDOTSS and to the requirements of subsections referenced therein.

B. Asphalt sub-base course: #53 aggregate. Eight (8) inches of aggregate is to be placed under asphalt pavement.

C. Concrete sidewalk sub-base course: Four (4) inches of #53 aggregate.

D. Concrete driveway apron sub-base course: Six (6) inches of #53 aggregate.

## PART 3 EXECUTION

### 3.01 SUBGRADE

A. The subgrade shall be shaped to true lines and elevations. Adequate drainage shall be provided at all times to prevent water from standing on the subgrade. Work shall conform to the requirements of Section 207, INDOTSS.

B. All boulders, organic materials, soft clay, spongy material and any other objectionable material shall be removed and replaced with approved materials. Subgrade shall be properly shaped, rolled and uniformly compacted to conform with the accepted cross-section.

### 3.02 GRANULAR BASE CONSTRUCTION

A. Placement: The Contractor shall use skilled workers, up to date methods and modern equipment suitable to the size of the work in spreading, compacting and finishing the gravel base. Other requirements are as follows:

B. Section 303, INDOTSS. Compacted to 95% of maximum dry density.

C. An approved vibrating device shall be used to compact gravel base. It may be supplemented by a 10 ton, three wheel, tandem or pneumatic-tire roller conforming to Section 401.09 of the INDOTSS. Contractor shall use such construction procedures, including sufficient wetting and number of passes to insure that the above density is attained.

D. All edges should be neatly cut and made uniform. All surplus and remainders should be carried away from the work site.

E. Include placement of aggregate reinforcement structures as directed by the Engineer.

### 3.03 REPAIRING FINAL WORK

A. The gravel pavement shall be checked as specified herein.

B. Granular base shall be free of low spots, pockets or high spots and shall be sloped as required for proper drainage.

**END OF SECTION**

# SECTION 02513 ASPHALT CONCRETE PAVING

## PART 1 GENERAL

### 1.01 WORK INCLUDED

A. Publications of the following institutes, associations, societies and agencies are referred to in this Section.
   1. Indiana Department of Transportation Standard Specifications, Latest Edition, (INDOTSS).
   2. American Society for Testing and Materials, ASTM.
   3. Federal Specifications, FS.

### 1.02 QUALITY REQUIREMENTS

A. Provide final surface of uniform texture conforming to required grades and cross sections.
B. Surface smoothness, when tested with 10 foot straight-edge:
   1. Base Course: ¼" in 10' max.
   2. Surface Course: ¼" in 10' max.
C. Provide Owner with duplicate copy of all crushed stone base and asphalt delivery tickets.

### 1.03 RELATED WORK

A. Section 02511 Crushed Stone.

## PART 2 PRODUCTS

### 2.01 MATERIALS

A. Materials shall conform with the following requirements:
   1. Coarse Aggregates: Class A or B, crushed or uncrushed gravel or;
   2. Fine Aggregates: Natural sand, well graded from coarse to fine conforming to INDOTSS, Section 913.01.
   3. Tack: Raped cure liquid asphalt or asphalt emulsion conforming to ISHC Standard Specification, Section 409.
   4. Bituminous Materials: Petroleum asphalt cement conforming to INDOTSS, Section 902.

### 2.02 PAVING MIXES

A. Asphalt materials shall conform to the requirements of Section 403 Hot Asphaltic Concrete Pavement (HAC), INDOTSS and to the requirements of subsections referenced therein.
B. The HAC mixtures shall be made using suitably graded coarse aggregate and fine aggregate of the size and combination as indicated in Table 1 and 3, Section 403.04, preparation of mixtures, INDOTSS.
   1. Surface course overlay: HAC Type 11.
   2. Base course: HAC Type 5.

## PART 3 EXECUTION

### 3.01 ASPHALT PAVEMENT CONSTRUCTION

A. Subgrade shall be proof-rolled using pneumatic tired roller capable of exerting minimum of 90 psi pressure uniformly over the subgrade surface. Conforming to INDOTSS, Section 401.09.

B. Proof-rolling shall provide two complete coverages.
C. Remove and replace soft spots with stable material, compact and re-proof.
D. All materials shall be spread using approved spreading equipment. Tailgating of aggregates directly onto subgrade will not be accepted.
E. Asphalt pavers shall be self-propelled with receiving hopper of sufficient capacity to provide a uniform spreading operation.
F. Contact surfaces of curbs, manholes, catch basins, etc., shall be painted with thin uniform coating of bituminous material prior to placing mixture against them.
G. The mix temperature at the site shall be a minimum of 285° F. - maximum of 325° F.
H. All joints shall be carefully made in such a manner as to insure a neat junction, thorough compaction, continuos band and seal.
I. The pavement shall be compacted to 95%
J. All edges shall be neatly cut and made uniform. All asphalt surplus and remainders shall be removed from work site.
K. Contractor shall have on hand at the site prior to paving operations, all necessary portable and hand tools and one stand-by-roller.

**3.02 COMPACTION**

A. Subgrade and compacted aggregate base courses shall be compacted to 95% of maximum dry density in accordance with ASTM designation D698.
B. Each lift of aggregate base shall be compacted to density specified above.
C. Soft spots found during proof rolling which are replaced with fill material, shall be compacted to density specified above.

**3.03 SPREADING AND ROLLING**

A. Base Course:
   1. Spread and roll to minimum finish depths indicated on details.
B. Surface Course:
   1. Spread and roll to minimum finish depths indicated on details.
C. Finish installation shall be true to line and grade and within 1/2" true elevation.

**3.04 COMPACTING**

A. Compacting shall conform to requirements of INDOTSS Section 401.12. Compaction shall be completed before temperature of the mixture has dropped below 180° F.
B. Density tests shall be made at each lift if so directed by the Engineer.
C. Tests shall made by soils engineer approved by the Engineer.
D. Results of each test shall be certified to the Engineer within 72 hours after tests are made.

**3.05 SURFACE TOLERANCES**

A. Surface of pavement shall meet requirements of INDOTSS Section 401.15.
B. Paving shall be free of low spots, pockets, or high spots and shall be sloped as required for proper drainage.
C. Any areas which develop an excess of bitumen shall be removed and replaced with proper materials.
D. Contractor shall maintain courses during the curing period.

**END OF SECTION**

# SECTION 02580 PAVEMENT MARKING

## PART 1 GENERAL

### 1.01 SUMMARY

A. This section includes the following:
B. Pavement markings for driving lanes and islands.

### 1.02 SUBMITTALS

A. Manufacturer's product literature and instruction sheet for thermoplastic markings.

### 1.03 QUALITY ASSURANCE

A. Applicator Qualifications.
   1. Striping contractor shall be experienced in this trade and shall have completed 20 jobs within the last 3 years. At least 10 jobs shall include public road projects.

### 1.04 REFERENCES

A. The latest issues of the following documents form a part of this specification to be extent indicated hereinafter.
B. Indiana Department of Transportation Standard Specification (INDOTSS).

### 1.05 PROJECT/SITE CONDITIONS

A. Environmental Requirements.
   1. Thermoplastic shall not be applied on wet surfaces, during wet or damp weather.
   2. Temperature during application shall be consistent with INDOTSS Section 808.06.

### 1.06 SEQUENCING/SCHEDULING

A. Time of application: Elapsed time between pavement placement and application of thermoplastic shall be 7 days minimum.
B. Contractor shall notify Owner in advance of pavement markings and coordinate with the Owner's representative.

## PART 2 PRODUCTS

### 2.01 MATERIALS

A. Performed reflective thermoplastic markings.
B. Standard: Product shall comply with INDOTSS 913.14.
C. Sizes, shapes, and colors: As indicated on the Drawings, thickness 1.5 mm.

## PART 3 EXECUTION

### 3.01 PREPARATION

A. All lines shall be laid out by the striping contractor and then inspected by the Engineer before application.
B. Surfaces which are to receive painted stripes or markings shall be thoroughly cleaned of all dirt, dust, grease, oil, curing compounds if used, and other foreign substances and shall be completely dry before paint is applied, per INDOTSS Section 808.03.

**3.02 APPLICATION**

A. Application of thermoplastic shall comply with INDOTSS Section 808.06.

B. Size and shape of markings shall be as indicated on the drawings.

**3.03 PROTECTION**

A. All markings shall be protected from traffic until they have dried sufficiently to prevent tracking.

**3.04 CLEAN UP**

A. Waste materials shall be removed at the end of each work day. Upon completion of the work, all containers and debris shall be removed from the site. Striping material spots upon adjacent surfaces shall be removed and the entire job left clean and acceptable.

**END OF SECTION**

# SECTION 02720 STORM SEWERAGE

## PART 1 GENERAL

### 1.01 SUMMARY

A. This section includes the following:
B. Storm sewerage system piping and appurtenances.

### 1.02 SUBMITTALS

A. Certificates.
   1. Prior to delivery, submit two copies of all certificates specified herein.
   2. Certificates shall be notarized and attest to compliance with the applicable specifications for grades, types or classes.
B. Shop Drawings.
   1. Precast concrete structures indicating dimension, reinforcing steel size and placement and location of all pipe openings, sizes and inverts.
C. Product Data.
   1. Submit manufacturers or trade association installation instructions for the following items:
      a) Pipe.
      b) Jointing method.
      c) Manhole gaskets.

### 1.03 QUALITY ASSURANCE

A. Testing.
   1. Testing laboratory services responsibility shall be as specified in Division 1.

### 1.04 REFERENCES

A. The latest issues of the following documents form a part of this specification to the extent indicated hereinafter.
   1. American Society of Testing and Materials (ASTM).
   2. C55 Concrete Building Brick.
   3. C270 Mortar for Unit Masonry.
   4. C478 Precast Reinforced Concrete Manhole Section.
   5. Indiana Department of Transportation Standard Specification (INDOTSS).
   6. Manufacturer's Associations.
   7. Corrugated Polyethylene Pipe Association (CPPA).
   8. The City of Bloomington Utilities Construction Specifications for Sanitary, Water, and Storm Project (CBUCS).

### 1.05 DELIVERY, STORAGE, AND HANDLING

A. Pipe delivery, storage and handling shall comply with latest edition of the installation manual of the following organizations:
   1. CPPA.

### 1.06 PROJECT/SITE CONDITIONS

A. Protection of people and work.
   1. Place protective fencing around all excavations.
   2. Shore and brace excavations as necessary to prevent cave-ins.
   3. Cover holes and trenches when work is not in progress.

4. Keep trenches and excavated areas free of water.
5. Grade to drain surface water away from excavations.
6. Keep bottom of trenches free of water by use of sump pits and pumps. Provide a standby pump.

## PART 2 PRODUCTS

### 2.01 MATERIALS

A. Pipe.
   1. Corrugated polyethylene/high density polyethylene (HDPE) pipes with smooth interiors liners, up to 36" diameter.
   2. Hancor, Inc., P.O. Box 1047, Findlay, OH 45839, (419)422-6521.
   3. Or approved equal.
   4. Contractor shall submit list of pipe to be used including certificate that confirms that pipe meets applicable local, city, state and federal codes.

B. Precast reinforced concrete manholes and inlets shall conform to INDOTSS 907.04, air entrained concrete is required, certificate required.

C. Sealant for precast reinforced concrete manholes shall be performed, vulcanized butyl rubber, complying with the requirements of FS SS-S-00210. Size shall be ¾ inch diameter and of the manufacturer's standard length.

D. Precast concrete segmental blocks shall be at least five (5) inches, but not more than eight (8) inches, in length and such shape that the joints can be effectively sealed and bonded with cement mortar. Units shall be solid.

E. Brick shall conform to ASTM Specification C62, Grade SW or ASTM C55, grade N-1 or N-11.

F. Mortar shall conform to ASTM Specification C270, type M.

G. Concrete shall conform to Division 3 – Concrete.

H. Waterproofing.
   1. Material shall comply with INDOTSS 902.06.
   2. Manhole steps shall be galvanized steel, vinyl coated steel, nylon coated steel, or cast iron. Size and shape as indicated on the drawings.

I. Frames and covers or gratings shall be cast iron conforming to FS QQ-1-652, with tensile-strength test not less than class 25. Weight, shape, size, and waterway openings for grates and curb inlets shall be as indicated. Frames and covers for curb inlets and for areas not subject to vehicular traffic or storage may be of malleable iron. Malleable iron frames and covers shall conform to ASTM Specification a47 and shall be of the weight, shape and size indicated.

## PART 3 EXECUTION

### 3.01 PREPARATION

A. Locate and mark all existing underground utilities in the area of operations.

B. Establish line and grade by offset control point stakes, grade stakes and grade boards as per ACPA installation manual.

C. Inspection of layout is required by the Engineer before proceeding.

### 3.02 INSTALLATION

A. Excavating, backfilling and compacting for utilities shall be as detailed on the drawings and as recommended by CPPA and the pipe manufacturer.

B. Drainage structures shall be of the following types, constructed of the materials specified for each type and in accordance with the drawings.

C. Manholes and inlets shall be constructed in accordance with the drawings. All manholes and inlets shall be complete with frames and covers or gratings and with rungs where deeper than 4 feet.

D. Holes for connection of storm sewer pipes shall be preformed by the manufacturer, or field cut or drilled. At no time shall the pipe hole exceed the outer pipe diameter plus two (2)-inches. The annular space between the pipe and the precast manhole or box inlet wall shall be filled inside and outside with a grout mixture composed of 2 parts of No. 23 fine aggregate and one part of Portland cement.

E. Precast concrete structures shall have riser joints sealed with preformed sealant in accordance with the manufacturer's instructions.

F. Brick and segmental concrete block structures shall be laid with joints completely filled and shall be smooth and free of surplus mortar on the inside of the structure. The outside of the structure shall be plastered with ½ inch of mortar over the entire surface of the walls.

G. Raise or lower existing manhole and inlet casting to new grade as indicated.

H. Placing Pipe.

1. Each pipe shall be carefully examined before being laid, and defective or damaged pipe shall not be used. Pipelines shall be laid to the grades and alignment indicated. Proper facilities shall be provided for lowering sections of pipe into trenches. Pipe shall not be laid in water, nor when trench conditions or weather are unsuitable for such work. Diversion of drainage or dewatering of trenches during construction shall be provided as necessary.
2. All pipe in place, including joints, shall have been inspected before backfilling.
3. Pipe laying shall proceed upgrade with the spigot ends of bell and spigot pipe and the tongue ends of tongue and groove pipe pointing in the direction of the flow.

I. Pipe Joints.

1. Pipes shall be joined in accordance with CPPA and pipe manufacturer's recommendations.
2. Do not lay storm sewer lines closer horizontally than 10' from water line(s). Where storm sewers and water line cross with a vertical of less than 18", construct storm sewer of "Water Works" grade mechanical joint pipe and extend mechanical joint storm sewer construction not less than 10' on each side of the crossing and/or entire parallel length of run which does not maintain the 10' minimum horizontal dimension.

**3.03 FIELD QUALITY CONTROL**

A. The Contractor shall meet the elevations and dimensions shown on the plans. Construction tolerances shall be .05 feet horizontally and .02 feet vertically. All work not meeting tolerances shall be removed and replaced at the Contractor's expense.

B. All concrete testing shall comply with the requirements of Division 3 – Concrete.

C. Do not backfill any pipe or structures until pipe and joints are inspected and approved.

D. Once constructed, all storm sewer pipes and manholes shall be soil tight. The contractor shall repair to the satisfaction of the Department all visible points of possible bedding and/or backfill infiltration into the system. The method of repair shall be per the approval of the Department. When necessary, the Contractor shall remove and reconstruct as much of the work as is necessary to obtain a system that passes the minimum tests prescribed herein.

E. HDPE Inspections.

F. Manhole and Box Inlet Inspection.

**3.04 WORK WITHIN PUBLIC RIGHTS-OF-WAY**

A. All work shall comply with the latest edition of CBUCS.

B. Contact the City of Bloomington Utilities (CBU) a minimum of seven (7) days prior to beginning work.

C. Schedule inspections with CBU before backfilling.
D. Pay for permits, bonds, etc. as required by CBU and the City of Bloomington.

**END OF SECTION**

# SECTION 03300 CAST-IN-PLACE CONCRETE

## PART 1 GENERAL

### 1.01 WORK INCLUDED

A. Poured-in-place concrete.
B. Concrete form work.
C. Concrete reinforcement.
D. Sealing concrete.

### 1.02 RELATED WORK

A. Section 02200 – Earthwork
B. Section 02511 – Crushed Stone

### 1.03 DESCRIPTION OF WORK

A. Provide concrete paving as shown and indicated, including curbs, slabs, walks, and pavement.

### 1.04 QUALITY ASSURANCE

A. ACI-347 - Recommended Practice for Concrete Form work.
B. ACI-318 – Reinforced Concrete; ACI-315 Manual of Standard Practice; CRSI-63; ASTM-A615.
C. ASTM-C94 – Ready-Mixed Concrete; ACI-304, 305, 306; ASTM-C150; ASTM-C260; ASTM-C33.
D. Codes and Standards: Comply with Indiana Department of Transportation, Standard Specifications Section 501, unless more stringent requirements are herein indicated.
E. All cast-in-place concrete to be installed by a concrete contractor with at least five (5) years experience in similar concrete work.

### 1.05 SUBMITTALS

A. Furnish samples, manufacturer's product data, mix designs, test reports, and materials' certifications of all materials used in this section and as required by Division One Specifications.

## PART 2 PRODUCTS

### 2.01 MATERIALS

A. Forms: Steel, wood or other suitable material of size and strength to resist movement during concrete placement and to retain horizontal and vertical alignment until removal. Use straight forms, free of distortion and defects.
B. Use flexible spring steel forms or laminated boards to form radius bends as required. Coat forms with a nonstaining form release agent that will not discolor or deface surface of concrete.
C. Fine and Coarse Aggregate: ASTM C33. ¾" max. size of coarse aggregate.
D. Concrete Reinforcing Fibers: Polypropylene, collated, fibers from Fiber Mesh, Inc., 4019 Industry Drive, Chattanooga, TN 37417, or equal.
E. Air Entraining – ASTM C260; equal to W.R. Meadows Air Entraining Agent.
F. Expansion Joint Materials: ½" x respective thickness resilient, closed cell polyurethane foam material; equal to W.R. Meadows Sealtight Rescore Expansion Joint Filler.
G. Sealant: One part self-leveling polyurethane sealant like Sonneborn's "Sonolastic SL1", ASTM C-920, Type S, Grade P, Class 25, Limestone color.

H. Liquid-Membrane Forming Curing Compound: Complying with ASTM C309, Type 1, Class A, clear unless other type acceptable to Engineer/Engineer. Moisture loss not more than 0.055 gr./sq. cm. When applied at 200 sq. ft./gal.
   1. Products: Subject to compliance with requirements, provide one of the following:
      a) "Masterseal"; Master Builders
      b) "A-H 3 Way Sealer"; Anti-Hydro Waterproofing Co.
      c) "Ecocure"; Euclid Chemical Co.
      d) "Clear Seal"; A.C. Horn
      e) "J-20 Acrylic Cure"; Dayton Superior
      f) "Sure Cure"; Kaufman Products, Inc.
      g) Spartan-Cote"; The Burke Co.
      h) "Sealkure" Toch Div.-Carboline
      i) "Kure-N-Seal"; Sonneborn-Contech
      j) "Polyclear"; Upco. Chemical/USM Corp.
      k) "L&M Cure"; L&M Construction Chemicals
      l) "Klearseal"; Setcon Industries
      m) "LR-152"; Protex Industries
      n) "Hardtop"; Gifford-Hill
   2. Refer to paragraph 3.08 for integral color concrete curing.

I. Epoxy Bonding Adhesive: Unitex Pro-Poxy 284.

J. Welded Wire Fabric: ASTM A 185, Welded Steel Wire Fabric.

K. Reinforcing Bars: ASTM A 615, grade 60, deformed.

**2.02 CONCRETE MIX, DESIGN AND TESTING**

A. Design mix to produce standard weight concrete consisting of Portland cement, aggregate, water reducing, or high range water reducing admixture (superplasticize), air entrancing admixture and water to produce the following properties:
   1. Compressive Strength: 4000psi, minimum at 28 days.
   2. Slump Range: 8" for concrete containing high range water reducing (superplasticizer); 3" for other concrete.
   3. Air Content: Type 1A (5-7% air), Portland Type, ASTM C150.

B. Mix concrete in accordance with ASTM C94.

C. Provide the specified reinforcing fibers in all concrete. Add fibers to mix at a rate of 1.0 lb. Per cubic yard, unless otherwise recommended by Manufacturer.

**PART 3 EXECUTION**

**3.01 WORKMANSHIP AND INSTALLATION**

A. Inspect prepared subgrade surface to check for unstable areas and need for additional compaction. Do not begin concrete work until such conditions have been corrected and are ready to proceed.

**3.02 AGGREGATE BASE**

A. Place aggregate base where required to conform with Section 02200 Earthwork and Section 02511 Crushed Stone.

B. Remove loose material from compacted subgrade or aggregate base surface immediately before placing concrete.

**3.03 FORM CONSTRUCTION**

A. Set forms to required grades and lines, rigidly braced and secured. Install sufficient quantity of forms to allow continuous progress of work and so that forms can remain in place at least 24 hours after concrete placement.

B. Check completed form work for grade and alignment to following tolerances:

C. Top of forms not more than 1/8" in 10'.

D. Vertical face on longitudinal axis, not more than ¼" in 10'.

E. Clean forms after each use, and coat with form release agent as often as required to ensure separation from concrete without damage.

**3.04 REINFORCEMENT**

A. Place reinforcing supported and secured against displacement. Before placing concrete, ensure reinforcing is clean, free of loose scale, dirt or other foreign coating which would reduce bond to concrete.

**3.05 CONCRETE PLACEMENT**

A. Do not place concrete until forms have been checked for line and grade. Moisten subgrade or aggregate base if required to provide a uniform damped condition at time concrete is placed. Do not place concrete around manholes or other structures until they are at required finish elevation and alignment.

B. Place concrete using methods which prevent segregation of mix. Consolidate concrete along face of forms and adjacent to traverse joints with internal vibrator. Keep vibrator away from joint assemblies, reinforcement, or side forms. Use only square faced shovels for hand spreading and consolidation. Consolidate with care to prevent dislocation of reinforcing, dowels, and joint devices.

C. Deposit and spread concrete in a continuous operation between transverse joints, as far as possible. If interrupted for more than ½ hour, place a construction joint.

**3.06 JOINTS**

A. General: Construct expansion, weakened plane (contraction), and construction joints true to line with face perpendicular to surface of concrete. Construct transverse joints at right angles to the centerline, unless otherwise indicated.

1. When joining existing structures, place transverse joints to align with previously placed joints, unless otherwise indicated.

B. Weakened Plane (Contraction) Joints: Provide weakened plane (contraction) joints, sectioning concrete into areas as shown on drawings. Construct weakened plane joints for a depth equal to at least ¼ concrete thickness, as follows:

C. Tooled Joints: Form weakened plane joints in fresh concrete by grooving top portion with a recommended cutting tool and finishing edges with a jointer.

D. Sawed Joints: Form weakened plane joints using powered saws equipped with shatterproof abrasive or diamond rimmed blades. Cut joints into hardened concrete as soon as surface will not be torn, abraded, or otherwise damaged by cutting action.

E. Inserts: Use embedded strips of metal or sealed wood to form weakened plane joints. Set strips into plastic concrete and carefully remove strips after concrete has hardened.

F. Construction Joints: Place construction joints where placement operations are stopped for a period of more than ½ hour, except where such pours terminate at expansion joints.

G. Construct joints as shown or, if not shown, use standard metal keyway section forms.

H. Where load transfer slip dowel devices are used, install so that one end of each dowel bar is free to move.

I. Expansion Joints: Provide expansion joints of pre-molded joint filler at a maximum of 30' O.C., unless otherwise indicated, and at all curb radii and locations abutting concrete curbs, catch basins, manholes, inlets, structures, walks, or other fixed objects.

1. Extend joint filler full width and depth of joint, and not less than ½" or more than 1" below finished surface.
2. Furnish joint fillers in one piece lengths for full width being placed, wherever possible. Where more than one length is required, lace or clip joint filler sections together.
3. Protect top edge of joint filler during concrete placement with a metal cap or other temporary material. Remove protection after concrete has been placed on both sides of joint.
4. Install Fillers and Sealants: Comply with the requirements of this Section Paragraph 2.01 E & F.

**3.07 CONCRETE FINISHING**

A. After striking off and consolidating concrete, smooth surface by screeding and floating. Use hand method only where mechanical floating is not possible. Adjust floating to compact surface and produce uniform texture.

B. After floating, test surface for trueness with a 10' straightedge. Distribute concrete as required to remove surface irregularities, and refloat repaired areas to provide a continuous smooth finish.

C. Work edges of slabs and formed joints with an edging took, and round to ½" radius, unless otherwise indicated. Eliminate tool marks on concrete surface.

D. After completion of floating and troweling when excess moisture or surface sheen has disappeared, complete surface finishing as indicated on plans or, if not shown, finish as follows:

E. Trowel Finish:
1. Initial troweling shall be delayed as long as practicable to avoid troweling while concrete is too soft. Water sheet shall have disappeared from the surface. Dry cement and sand shall not be used to take up surface moisture.
2. First troweling shall be sufficient to produce a smooth surface.
3. Final troweling shall be done with a tilted trowel and heavy pressure after the concrete has become hard enough to give a ringing sound under the trowel and shall produce a smooth plane surface free of defects.

F. Sweat Finish: After screeding and floating, an initial troweling shall be given surface when it has hardened enough so that water and fine material are not worked to the top.
1. Final troweling shall be done with the trowel worked flat on the surface producing a fine, non-slip, swirled sandy texture.
2. Walks and Steps Finish; medium broom finish, perpendicular to the line of traffic. Repeat operation if required to provide texture acceptable to the Engineer.
3. On entrance drive surfaces, provide a course, non-slip finish by scoring surface with a stiff bristled broom, perpendicular to the line of traffic.

G. Exposed concrete light bases: Remove all form marks and rub to a smooth finish.

H. Do not remove forms for 24 hours after concrete has been placed unless otherwise approved by the Engineer. After form removal, clean ends of joints and point up any minor honeycombed areas. Remove and replace areas or sections with major defects, as directed by the Engineer.

**3.08 CONCRETE CURING AND PROTECTION**

A. General: Protect freshly placed concrete from premature drying and excessive cold or hot temperatures. In hot, dry, and windy weather, protect concrete from rapid moisture loss before and during finishing operations with an evaporation control material. Apply, according to manufacturer's instructions after screeding and bull floating, but before power floating and troweling.

B. Start initial curing as soon as free water has disappeared from concrete surface after placing and finishing. Weather permitting, keep continuously moist for not less than 7 days.

C. Curing Methods: Cure concrete by curing compound, by moist curing, by moisture-retaining cover curing, or by combining these methods, as specified.

D. Provide moisture curing by the following methods:

1. Keep concrete surface continuously wet by covered with water.
2. Use continuous water-fog spray.
3. Cover concrete surface with specified absorptive cover, thoroughly saturate cover with water, and keep continuously wet. Place absorptive cover to provide coverage of concrete surfaces and edges, with a 4-inch lap over adjacent absorptive covers.
4. Provide moisture-retaining cover curing as follows:
5. Cover concrete surface with moisture-retaining cover for curing concrete, placed in widest practicable width with sides and ends lapped at least 3 inches and sealed by waterproofed tape or adhesive. Immediately repair any holes or tears during curing period using cover material and waterproof tape.
6. Apply curing compound on exterior slabs, walks, and steps as follows:
7. Apply curing compound to concrete as soon as final finishing operations are complete (within 2 hours and after surface water sheen has disappeared). Apply uniformly in continuous operation by power spray or roller according to manufacturer's directions. Re-coat areas subjected to heavy rainfall within 3 hours after initial application. Maintain continuity of coating and repair damage during curing period.
8. Use membrane curing compounds that will not affect surfaces to be covered with finish materials applied directly to concrete.

**3.09 REPAIRS AND PROTECTIONS**

A. Repair or replace broken or defective concrete, as directed by Engineer.

B. Drill test cores where directed by Engineer, when necessary to determine magnitude of cracks or defective areas. Fill drilled core holes in satisfactory pavement areas with Portland cement concrete bonded to pavement with epoxy resin grout.

C. Protect concrete from damage and graffiti until acceptance of work. Exclude traffic from pavement for at least 14 days after placement. When construction traffic is permitted, maintain pavement as clean as possible by removing surface stains and spillage of materials as they occur.

D. Sweep concrete pavement and wash free of stains, discolorations, dirt and other foreign material just prior to final inspection.

**END OF SECTION**

# CONSTRUCTION SPECIFICATIONS

For...

CITY OF BLOOMINGTON UTILITIES

Wastewater, Water, and Storm Projects

Update Issue  January 1, 2011

**CITY OF BLOOMINGTON UTILITIES**
**Engineering Department**
**P.O. Box 1216**
**600 E. Miller Dr.**
**Bloomington, IN 47402-1216**
**(812) 339-1444**

# CITY OF BLOOMINGTON UTILITIES ENGINEERING

## Staff Contact Numbers

**Fax: 331-5961**

**Assistant Director - Engineering**
**Mike Bengtson 349-3653**

**Utilities Engineers**
**Jane Fleig 349-3631**
**Phil Peden 349-3634**

**Capital Projects Manager**
**Mike Hicks 349-3623**

**Senior Project Coordinators**
**Troy Powell 349-3632**
Plan Review & Construction Specifications
**Byron Reinhold 349-3627**
Plan Review

**Administrative Project Coordinator**
**Sheila McGlothlin 349-3660**

**Project Coordinator**
**Nancy Axsom 349-3689**
New Connections & Services
**Mike Carter 349-3628**
Easements & Property Acquisitions

**Utilities Technicians**
**Tonia Lucas 349-3676**
Plan Submittals
**Greg Nettleton 349-3625**
Storm Technician

Pre- Construction & Final Walk Through Inspections

**Utilities Inspectors**
**Tony Eads 349-3941**
**Harvey McNeal 349-3629**
**David Myers 349-3626**

**GIS Coordinator**
**Chris Clothier 349-3622**
**GIS Assistant Coordinator**
**Dave Gray 349-3620**

## TABLE OF CONTENTS

4. **CONSTRUCTION SPECIFICATIONS FOR SANITARY, WATER, AND STORM PROJECTS**.
4.1. **Scope.**
4.1.1. Description.
4.1.2. Order of Precedence.
4.1.3. Limits of Work.
4.1.3.1. On Private Property.
4.1.3.2. Work Within State Highway and Railroad Right-of-way.
4.1.3.3. Road Cut Permits.

4.2. **Project Requirements.**
4.2.1. Notification Procedures.
4.2.1.1. Utilities.
4.2.1.2. Protection of Underground Facilities.
4.2.2. Pre-Construction Meeting
4.2.2.1. Utilities Inspection
4.2.3. Construction Schedule.
4.2.4. Unfavorable Construction Conditions.
4.2.5. Clean-Up Operations.

4.3. **Temporary Facilities.**
4.3.1. Water.
4.3.2. Power.
4.3.3. Maintenance of Traffic.
4.3.4. Barricades and Lights.
4.3.5. Protection of Public and Private Property.
4.3.6. Tree Protection.
4.3.7. Dust Control.
4.3.8. Temporary Drainage Provisions.
4.3.9. Erosion Control.
4.3.10. Pollution Control.

4.4. **Materials for Sewer and Water Projects.**
4.4.1. General.
4.4.1.1. Concrete.
4.4.1.1.1. Class A Concrete.
4.4.1.1.1.1. Reinforcing Steel.
4.4.1.1.2. Class B Concrete.
4.4.1.2. Forms.
4.4.2. **Materials for Sanitary Gravity Sewers.**
4.4.2.1. Pipe for Gravity Sewers.
4.4.2.1.1. Plastic Pipe.
4.4.2.1.1.1. Polyvinyl Chloride (PVC) Pipe.
4.4.2.1.1.1.2. Water-Grade PVC Pipe.
4.4.2.1.1.2. Polyethylene (PE) Pipe.
4.4.2.1.2. Vitrified Clay Pipe (VCP).
4.4.2.1.3. Ductile Iron Pipe (DIP).
4.4.2.1.4. Reinforced Concrete Pipe.
4.4.2.1.4.1. Portland Cement.
4.4.2.1.4.2. Aggregate.
4.4.2.1.4.3. Steel Reinforcement.
4.4.2.1.4.4. Lift Holes.
4.4.2.1.4.5. Joints.
4.4.2.1.4.6. Absorption Limit.
4.4.2.1.4.7. Markings.
4.4.2.1.5. Non-Shear Pipe Couplings.

4.4.2.2. Manholes.
4.4.2.2.1. General.
4.4.2.2.2. Manhole Bases.
4.4.2.2.3. Manhole Tops.
4.4.2.2.4. Manhole Barrels.
4.4.2.2.5. Manhole Gaskets and Boots.
4.4.2.2.6. Manhole Sealants.
4.4.2.2.7. Castings.
4.4.2.2.8. Steps.
4.4.3. **Material for Pressure Sanitary Sewers.**
4.4.3.1. General.
4.4.3.2. Force Main Pipe and Fittings.
4.4.3.2.1. Polyvinyl Chloride (PVC).
4.4.3.2.1.1. Locator Wire and Signs.
4.4.3.2.2. Ductile Iron.
4.4.3.2.2.1. Pipe Joints.
4.4.3.2.2.2. Pipe Fittings.
4.4.3.2.2.3. Polyethylene Encasement
4.4.3.2.3. High Density Polyethylene (HDPE) Pipe.
4.4.3.2.3.1. HDPE Fittings.
4.4.3.2.3.2. Joining of HDPE.
4.4.3.2.3.3. Locator Wire and Signs.
4.4.3.2.4. (Intentionally Left Open)
4.4.3.2.5. Valves.
4.4.3.2.5.1. Gate Valves.
4.4.3.2.5.2. Plug Valves.
4.4.3.2.5.3. Check Valves.
4.4.3.2.5.4. Air/Vacuum Valves.
4.4.3.3. Pump Station Specifications (separate packet).
4.4.4. **Materials for Water Mains.**
4.4.4.1. Water Pipes.
4.4.4.1.1. Ductile Iron.
4.4.4.1.1.1. D.I.P Joints.
4.4.4.1.1.2. D.I.P Fittings.
4.4.4.1.1.3. Polyethylene Encasement
4.4.4.1.2. Polyvinyl Chloride (PVC).
4.4.4.1.2.1. Locator Wire and Signs.
4.4.4.1.3. Prestressed Concrete Cylinder Pipe.
4.4.4.1.4. Copper.
4.4.4.1.4.1. Fittings for Service Lines.
4.4.4.2. Valves.
4.4.4.2.1. Gate Valves.
4.4.4.2.2. Butterfly Valves.
4.4.4.2.3. Air Release Valves.
4.4.4.2.4. Tapping Valves.
4.4.4.2.5. Tapping Sleeves or Saddles.
4.4.4.3. Valve Markers.
4.4.4.4. Fire Hydrants.
4.4.4.5. Flush Hydrants.
4.4.5. **Materials for Storm Sewers.**
4.4.5.1. Pipe for Storm Sewers.
4.4.5.1.1. Ductile Iron Pipe (DIP).
4.4.5.1.1.1. Coatings and Linings.
4.4.5.1.1.2. Joints.
4.4.5.1.1.2.1. Push-on Joints.
4.4.5.1.1.2.2. Mechanical Joints.
4.4.5.1.1.3. Fittings.

4.4.5.1.1.4. Markings.
4.4.5.1.2. High Density Polyethylene Pipe.
4.4.5.1.2.1. Joints.
4.4.5.1.2.2. Gaskets.
4.4.5.1.2.3. Nominal Pipe Stiffness.
4.4.5.1.2.4. Markings.
4.4.5.1.3. Polyvinyl Chloride (PVC) Pipe.
4.4.5.1.3.1. Joints.
4.4.5.1.3.2. Gaskets.
4.4.5.1.3.3. Markings.
4.4.5.1.4. Reinforced Concrete Pipe.
4.4.5.1.4.1. Portland Cement.
4.4.5.1.4.2. Aggregate.
4.4.5.1.4.3. Steel Reinforcement.
4.4.5.1.4.4. Lift Holes.
4.4.5.1.4.5. Joints.
4.4.5.1.4.6. Absorption Limit.
4.4.5.1.4.7. Markings.
4.4.5.1.5. Spiral Rib (Type I.R.) Metal Pipe (SRP).
4.4.5.1.5.1. Nominal Pipe Wall Thickness.
4.4.5.1.5.2. Joints.
4.4.5.1.5.3. Gaskets.
4.4.5.1.5.4. Installation.
4.4.5.1.5.5. Markings.
4.4.5.2. Precast and Cast-In-Place Box Culverts.
4.4.5.3. Open Channels.
4.4.5.4. Detention Ponds and Dams.
4.4.5.5. Storm Sewer Manholes, Inlets, and Catch Basins.
4.4.5.5.1. Storm Sewer Structures.
4.4.5.5.1.1. Cast-In-Place Storm Sewer Structures.
4.4.5.5.1.2. Precast Storm Sewer Manholes.
4.4.5.5.1.3. Precast Concrete Inlets and Catch Basins.
4.4.5.5.1.4. Concrete Bases, Inverts, and Flow Channels.
4.4.5.5.1.5. Adjustment of Frames and Covers.
4.4.5.5.1.5.1. Precast Manhole Adjusting Rings.
4.4.5.5.1.5.2. Precast Concrete Box Inlets and Spacers.
4.4.5.5.1.6. Castings, Frames, and Covers.
4.4.5.5.1.7. Manhole and Inlet Dimensions.
4.4.5.6. Steps.
4.4.5.7. Sewer Pipe to Storm Structure Connections.
4.4.5.8. Rejection of Precast Storm Structure Sections.

4.5. **Installation of Sanitary, Water, and Storm Mains.**
4.5.1. General.
4.5.1.1. Protection of the Site.
4.5.1.2. Trench Excavation.
4.5.1.2.1. Classification of Excavated Materials.
4.5.1.2.1.1. Earth Excavation.
4.5.1.2.1.2. Rock Excavation.
4.5.1.2.1.2.1. Rock Excavation for Placing Pipe.
4.5.1.2.1.2.2. Rock Excavation for Structures.
4.5.1.2.1.2.3. Blasting.
4.5.1.2.1.2.3.1. General.
4.5.1.2.1.2.3.2. Blasting Consultant.
4.5.1.2.1.2.3.3. Permits and Applicable Standards.
4.5.1.2.1.2.3.4. Blasting Plan.
4.5.1.2.1.2.3.5. Blasting Procedures.

4.5.1.2.1.2.3.6. Blast Monitoring.
4.5.1.2.1.2.3.7. Preblast Survey.
4.5.1.2.1.2.3.8. Postblast Survey.
4.5.1.2.1.2.4. Rock Excavation Pay Limits.
4.5.1.2.2. Stockpiling of Excavated Materials.
4.5.1.2.3. Disposal of Excess Excavated Materials.
4.5.1.2.4. Unauthorized Excavation.
4.5.1.2.5. Sheeting and Shoring.
4.5.1.2.6. Removal of Water.
4.5.1.2.7. Trench Maintenance.
4.5.1.3. Boring or Tunneling.
4.5.1.4. Bedding.
4.5.1.4.1. Beneath Pipe.
4.5.1.4.2. Beneath Structures.
4.5.1.5. Laying of Pipe.
4.5.1.6. Backfill.
4.5.1.6.1. Beneath Pavements, Surfacing and Driveways.
4.5.1.6.2. Under Highway Shoulders; Under Fills and Embankments.
4.5.1.6.3. In Unimproved Areas.
4.5.1.6.4. Around Structures.
4.5.1.7. Vertical Separation Between Utilities.
4.5.1.8. Horizontal Separation Between Utilities.
4.5.1.9. If Impossible to Maintain Proper Vertical or Horizontal Separation.
4.5.2. **Installation of Sanitary Mains.**
4.5.2.1. Installation of Gravity Sewers.
4.5.2.1.1. Installation of Plastic Pipe.
4.5.2.1.1.1. Field-Cutting Plastic Pipe.
4.5.2.1.1.1.1. Polyvinyl Chloride (PVC) Pipe.
4.5.2.1.1.1.2. Polyethylene (PE) Pipe.
4.5.2.1.1.2. Bedding and Backfill for Plastic Pipe.
4.5.2.1.1.2.1. PVC Pipe.
4.5.2.1.1.2.2. PE Pipe.
4.5.2.1.2. Installation of Vitrified Clay Pipe (VCP).
4.5.2.1.2.1. Bedding and Backfill for VCP.
4.5.2.1.3. Installation of Ductile Iron Pipe (DIP).
4.5.2.1.3.1. Field-Cutting DIP.
4.5.2.1.3.2. Bedding and Backfill for DIP.
4.5.2.1.4. Installation of Reinforced Concrete Pipe (R.C.P.).
4.5.2.1.4.1. Bedding and Backfill for Reinforced Concrete Pipe.
4.5.2.1.5. Service Connections.
4.5.2.1.5.1. Sanitary Laterals and Clean-outs.
4.5.2.1.5.2. Area Drains for Dumpster Pads.
4.5.2.1.6. Sewer Pipe to Manhole Connections.
4.5.2.1.7. Installation of Manholes.
4.5.2.1.7.1. Assembly of Manhole Base, Barrel, and Cone.
4.5.2.1.7.2. Installation of Table and Trough.
4.5.2.1.7.3. Installation of Manhole Steps.
4.5.2.1.7.4. Installation of Castings.
4.5.2.1.7.5. Manhole Sealants.
4.5.2.1.7.6. Cold Weather Installation of Manholes.
4.5.2.1.8. Sewer Cleaning.
4.5.2.1.9. Abandoning of Sewers.
4.5.2.2. Design and Installation of Force Mains.
4.5.2.2.1. Ductile Iron Pipe.
4.5.2.2.2. PVC Pipe.
4.5.2.2.3. High Density Polyethylene (HDPE) Pipe.
4.5.2.2.3.1. Joining of HDPE

4.5.2.2.3.2. Locator Wire
4.5.2.2.4. Force Main Fittings.
4.5.2.2.4.1. Air Release Valves.
4.5.2.2.5. Installation of Pump Stations (separate packet).
4.5.2.2.6. Installation of Wet Wells.
4.5.2.2.6.1. Pre-cast Wet Well Structures.
4.5.2.2.6.2. Poured-in-place Wet Well Structures.
4.5.2.2.6.3. Wet Well Sealants.
4.5.2.3. Design and Installation of Inverted Siphons.
4.5.2.4. Cured in Place Pipe (CIPP).
4.5.2.5. Pipe Bursting.
4.5.3. **Installation of Water Mains.**
4.5.3.1. General.
4.5.3.1.1. Maintaining Existing Water Services.
4.5.3.1.2. Inspection Before Installation.
4.5.3.1.3. Cleaning of Pipe and Fittings.
4.5.3.1.4. Bell Ends to Face Direction of Laying.
4.5.3.1.5. Permissible Deflection at Joints.
4.5.3.1.6. Crossing Existing Utilities.
4.5.3.1.7. Dead-End Water Mains.
4.5.3.2. Installation of Pipe.
4.5.3.2.1. Installation of Ductile Iron Pipe (DIP).
4.5.3.2.1.1. Push-On Joints.
4.5.3.2.1.2. Mechanical Joints.
4.5.3.2.1.3. Bedding and Backfill for DIP.
4.5.3.2.1.4. Field-Cutting DIP.
4.5.3.2.1.5. Different Metallic Pipe Materials.
4.5.3.2.2. Installation of PVC Pipe.
4.5.3.2.2.1. Field-Cutting PVC Pipe.
4.5.3.2.2.2. Bedding and Backfill for PVC Pipe.
4.5.3.2.2.2.1. PVC Pipe 6" and Larger in Diameter.
4.5.3.2.2.2.2. PVC Pipe Less Than 6" in Diameter.
4.5.3.2.3. Installation of Prestressed Concrete Cylinder Pipe.
4.5.3.3. Installation of Fire Lines.
4.5.3.4. Installation of Fittings and Appurtenances.
4.5.3.4.1. Thrust Restraint.
4.5.3.4.1.1. Restrained Joints.
4.5.3.4.1.2. Thrust Blocks.
4.5.3.4.2. Installation of Hydrants.
4.5.3.4.3. Installation of Flush Hydrants.
4.5.3.4.4. Installation of Valves.
4.5.3.4.5. Installation of Line Valves.
4.5.3.4.6. Installation of Tapping Valves.
4.5.3.4.7. Installation of Air Release Valves.
4.5.3.4.8. Installation of Valve Boxes.
4.5.3.4.9. Installation of Valve Markers.
4.5.3.5. Filling, Sterilization, and Flushing of Water Mains.
4.5.3.5.1. Filling, Sterilization, and Flushing Procedure.
4.5.3.6. Service Connections.
4.5.3.7. Installation of Domestic Meter, Yoke, and Pit.
4.5.3.8. Installation of Large Meter and Vault.
4.5.4. **Installation of Storm Sewers.**
4.5.4.1. Line and Grade.
4.5.4.2. Laying of Pipe.
4.5.4.2.1. Laying of Pipe in Cold Weather.
4.5.4.2.2. Unstable Soil Conditions.
4.5.4.2.3. Dewatering and Control of Surface Water.

4.5.4.3. Bedding for Storm Sewers.
4.5.4.3.1. Beneath Pipe.
4.5.4.3.2. Beneath Structures.
4.5.4.4. Backfill for Storm Sewers.
4.5.4.4.1. Backfill over Pipes.
4.5.4.4.1.1. Primary Backfill.
4.5.4.4.1.2. Secondary Backfill.
4.5.4.4.2. Backfill around Structures.
4.5.4.5. Installation of Storm Structures.
4.5.4.5.1. Installation of Cast-In-Place Storm Structures.
4.5.4.5.2. Installation of Precast Storm Sewer Manholes.
4.5.4.5.3. Installation of Precast Concrete Inlets and Catch Basins.
4.5.4.6. Separation between Utilities.
4.5.4.7. Abandoning of Sewers.
4.5.4.8. Deflection Testing.
4.5.5. **Concrete Mixing and Placing.**
4.5.5.1. Cold Weather Concrete.
4.5.6. **Street Cut Repairs.**
4.5.6.1. General.
4.5.6.2. Paving.
4.5.7. **Miscellaneous Restoration and Clean-Up.**
4.5.8. **Testing of Sewer and Water Mains.**
4.5.8.1. Testing of Sewer Mains.
4.5.8.1.1. Testing of Gravity Sewers.
4.5.8.1.1.1. Air Pressure Test.
4.5.8.1.1.2. Exfiltration test.
4.5.8.1.1.3. Vacuum Test.
4.5.8.1.1.3.1. Vacuum Test for Manholes.
4.5.8.1.1.3.2. Vacuum Test for Sewer Pipes.
4.5.8.1.1.4. Deflection Test.
4.5.8.1.1.5. Smoke Test.
4.5.8.1.1.6. Television Inspection.
4.5.8.1.2. Testing of Force Mains.
4.5.8.1.2.1. AWWA Standard C600, Latest Update.
4.5.8.1.2.2. AWWA Standard C605, Latest Update.
4.5.8.1.3. Testing of Wet Wells.
4.5.8.2. Testing of Water Mains.
4.5.8.2.1. Pressure and Leakage Test.
4.5.8.2.1.1. Procedure.
4.5.8.2.2. Purification Test.
4.5.8.2.2.1. Rechlorination Procedures.
4.5.8.2.3. Fire Line Main Testing
**INDEX**
**Notification**
**Detail Drawings**

# 4. CONSTRUCTION SPECIFICATIONS FOR SANITARY, WATER, AND STORM PROJECTS.

## 4.1. SCOPE.

4.1.1. DESCRIPTION. These specifications are based on the Indiana Water Pollution Control Board Article 327 IAC and the Ten States Standards for sewer and water. They describe the procedures, methods and materials for installing gravity sewers, pressure sewers, water mains, and storm sewers, together with all necessary appurtenances and surface restoration. They are intended in specific for all sewer, storm or water projects of the City of Bloomington Utilities Department, and shall supercede all other specifications for any sanitary, water, or storm construction taking place within the jurisdictional area of the City of Bloomington Utilities Department.

4.1.2. ORDER OF PRECEDENCE. These specifications are to be considered an integral part of the Construction Contract and shall be deemed to be inserted therein. The Construction Contract shall be read and enforced as though these specifications were included verbatim. Wherein conflicts of language are encountered between these Specifications and the other parts of the Contract Documents, the component part first enumerated shall govern over any other component part which follows it in this Order of Precedence:

1. Construction Contract
2. Addenda
3. Special Conditions
4. Supplementary Conditions
5. Construction Specifications
6. Contract Drawings
7. General Conditions
8. Standard Drawings
9. Instruction to Bidders
10. Advertisement for Bids
11. Contractor's Proposal (Bid Form)

4.1.3. LIMITS OF WORK. The Work shall be prosecuted entirely within the limits of right-of-way of the various roads, highways, and easements, as indicated on the drawings and on file in the office of the County Recorder. If soil conditions or other conditions should make it necessary to provide sheeting, shoring, or special excavation procedures, in order to confine the Work within the prescribed limits, the Contractor will be required to provide such protective measures at his own expense.

4.1.3.1. ON PRIVATE PROPERTY. Unless otherwise stated in the Contract Documents, easements across private property have been obtained when necessary by the Owner and are indicated on the drawings. The Contractor shall be responsible for determining the easements in the field and for setting stakes as he considers necessary to mark the boundaries.

The Contractor shall not enter, for any purpose, any private property outside the designated construction easement boundaries without written permission from the owner and the tenant of the property. This shall include, but not be limited to, delivery of pipe and materials, storage of equipment and materials, and storage of materials excavated from the trench.

4.1.3.2. WORK WITHIN STATE HIGHWAY AND RAILROAD RIGHT-OF-WAY. Unless otherwise stated in the Contract Documents, permits shall be obtained by Owner. All Work performed, and all operations of Contractor, his employees or Subcontractors, within the limits of railroad and highway rights-of-way, shall be in conformity with the requirements and be under the control (through the Owner) of the railroad or highway authority owning, or having jurisdiction over and control of, the right-of-way in each case.

4.1.3.3. ROAD CUT PERMITS. Unless otherwise stated in the Contract Documents, the Owner shall obtain permission for construction within the rights-of-way of the City and County roads; however, the Contractor shall be responsible for obtaining necessary permits from the City and County to cut any of their streets or curbs. The Contractor should be aware that some streets are designated "no-cut" streets,

and should consult with the City or County Engineer concerning these. Street replacement and site restoration shall be approved by the appropriate agency before final acceptance of the job.

4.2. **PROJECT REQUIREMENTS.**

4.2.1. NOTIFICATION PROCEDURES. The Indiana Underground Utility Facilities Damage Prevention Act has been in effect since January 1, 1991. This law requires the Contractor, at least two working days before start of construction, to call the Indiana Underground Plant Protection Service (I.U.P.P.S.), commonly referred to as Holey Moley, 1-800-382-5544 or 811, and request location and marking of underground facilities in the construction area. Contractor shall also give at least forty-eight (48) hours notice to the agencies and persons indicated in the section of this Contract titled "Notification."

4.2.1.1. UTILITIES. The Owner shall notify all utilities of the extent of the project and shall indicate approximate locations of these utilities on the drawings. However, it is the responsibility of the Contractor to request field-marking of all utilities, as directed in Paragraph 4.2.1., well in advance of the start of construction, and compare field markings with utility locations indicated on the plan drawings. Contractor shall notify design engineers of any discrepancies and request correction of the plan drawings. Contractor shall give all utilities at least two (2) working days advance notice of the date of the start of construction to insure that all concerned utilities have the necessary time and access to locate and protect their facilities and to provide inspection during construction. Some utilities which must be notified are: Indiana University, gas, telephone, electric, cable TV, data fiber, traffic lights, water, sanitary sewer, and storm sewer.

4.2.1.2. PROTECTION OF UNDERGROUND FACILITIES. Contractor shall observe Indiana Code 8-1 Chapter 26 (Damage to Underground Facilities) both prior to and during all excavation. Contractor shall be aware that IC 8-1-26-20 Section 2 states: *"If the clearance is less than two (2) feet, exposure of the underground facility may be accomplished only by the use of hand excavation, air cutting, or vacuum excavation."* The "hand digging" zone is two (2) feet each side of the mark or line indicated by marks or flags, if the size of the underground facility is not indicated. Otherwise, the "hand digging" zone is two (2) feet on each side of the structure.

4.2.2. PRE-CONSTRUCTION MEETING. Projects that have utilities to be inspected by CBU will require a pre-construction meeting with the developer or the contractor to go over the scope of the project. Contact Tom Axsom at (812)349-3633 to set up the pre-construction meeting.

4.2.2.1. UTILITIES INSPECTION. Contractor shall notify the City of Bloomington, Utilities Engineering Department one (1) working day prior to construction of any water, storm, or sanitary sewer utility work. A CBU inspector must have notice so work can be inspected, documented, and a proper as-built made. When a contractor works on weekends or beyond normal CBU work hours or on holidays of CBU the contractor will pay for the inspector's overtime. For CBU work hours and holiday information call the City of Bloomington, Utilities Engineering Department at (812)349-3660.

4.2.3. CONSTRUCTION SCHEDULE. Before construction begins, a construction schedule shall be submitted estimating completion dates for the various portions and items of Work and number of crews or manpower on the job at various periods. This schedule must be posted and kept up to date. The Contractor shall submit a tentative Work schedule with his bid.

4.2.4. UNFAVORABLE CONSTRUCTION CONDITIONS. During unfavorable weather, or when unsuitable construction conditions are encountered, the Contractor shall confine his operations to Work which will not be affected adversely by such conditions. No portion of the Work shall be performed under conditions which would affect adversely the quality or efficiency thereof, unless special means or precautions are taken by the Contractor to perform the Work in a proper and satisfactory manner.

4.2.5. CLEAN-UP OPERATIONS. The entire project site shall be thoroughly cleaned by the Contractor at the completion of the Work or portions thereof. Clean-up operations at a minimum shall consist of the removal and disposal of all broken concrete, wood scraps, wire, packaging materials, forms, scaffolds, and other objectionable rubble created during construction operations. Clean-up shall also consist of

washing and scrubbing areas which are dirtied by mud, sewage, oil, grease and dust, in order to return such areas to a clean and finished appearance.

4.2.5.1. DAILY CLEAN - UP. During construction the Contractor shall clean up all construction areas at the end of each working day. This clean-up operation shall include, but not be limited to, the collection and disposition of all material to be discarded, the removal of excavated material from any roadway, walk, or driveway, the disposal of all flammable materials, and the storage of construction tools, equipment, and unused construction materials in their proper storage place.

4.3. **TEMPORARY FACILITIES.**

4.3.1. WATER. All water required for and in connection with the Work to be performed and for any specified tests of piping, equipment, devices, etc., for inundation or settling of backfill material or for any other use as may be required for proper completion of the Work shall be provided by, and at the expense of, the Contractor. The only exception shall be the filling and flushing of water mains in accordance with 4.5.3.5.1. No separate payment for water used or required will be made and all costs in connection therewith shall be included in the other items.

4.3.2. POWER. Contractor shall provide all power for heating, lighting, operation of Contractor's plant or equipment, or for any other use by Contractor.

4.3.3. MAINTENANCE OF TRAFFIC. Contractor shall conduct his Work to minimize interference with public travel, whether vehicular or pedestrian. Contractor shall provide a Traffic Maintenance Plan in accordance with the Manual of Uniform Traffic Control Devices (MUTCD) which must be approved by the agency having jurisdiction. Whenever it is necessary to cross, obstruct, or close roads and driveways, whether public or private, Contractor shall provide and maintain suitable and safe bridges, detours, or other temporary expedients for the accommodation of public and private travel, and shall give reasonable notice to owners of private drives before interfering with them. Such maintenance of traffic will not be required when Contractor has obtained permission from the owner and tenant of private property, or from the authority having jurisdiction over public property involved, to obstruct traffic at the designated point.

In making open-cut road crossings, Contractor shall not block more than one-half of the road at a time. The Contractor shall furnish all flagmen, barricades, flashing lights, signs, and other protective devices to insure the safety of all vehicular and pedestrian traffic. Whenever possible, Contractor shall widen the shoulder on the opposite side to facilitate traffic flow. Temporary surfacing shall be provided as necessary on shoulders.

4.3.4. BARRICADES AND LIGHTS. All roads, highways, and other public thoroughfares which are closed to traffic shall be protected by effective barricades on which shall be placed acceptable warning signs. Barricades shall be located at the nearest intersecting public highway or road on each side of the blocked section.

All open trenches and other excavations shall have suitable barricades, signs, and lights to provide adequate protection to the public. Obstructions such as material piles and equipment shall be provided with similar warning signs and lights.

All barricades and obstructions shall be illuminated with warning lights from sunset to sunrise. Material storage and conduct of Work on or alongside public roads and highways shall cause minimal obstruction and inconvenience to the traveling public.

All barricades, signs, lights and other protective devices shall be installed and maintained in conformity with the requirements of the appropriate jurisdictional agency. All Work within the rights-of-way of any primary or secondary streets within the City shall be protected with flagmen, barricades, flashing lights, signs and other devices as required by the Indiana Department of Transportation. Work within the rights-of-way of all other streets shall be protected by flagmen, barricades, flashing lights, signs and other devices as required by the Utilities Engineer, City Engineer, County Engineer or their agents.

4.3.5. PROTECTION OF PUBLIC AND PRIVATE PROPERTY. Contractor shall observe Indiana Code 8-1 Chapter 26 (Damage to Underground Facilities) both prior to and during all excavation. Contractor shall protect, shore, brace, support and maintain all underground pipes, conduits, drains, and other underground construction uncovered or otherwise affected by his construction operations. All pavement, surfacing, driveways, utility poles, guy wires, fences, walls and other surface structures affected by construction operations, shall be restored to their original condition. All replacements shall be made with new materials and under the supervision of the authority having jurisdiction.

Contractor shall be responsible for all damage to streets, roads, highways, shoulders, ditches, embankments, culverts, bridges, and other public or private property, regardless of location or character, which may be caused by transporting equipment, materials, or men from the Work or any part of the site thereof, whether by him or his Subcontractors. Contractor shall make satisfactory and acceptable arrangements with the owners of, or the agency of authority having jurisdiction over, the damaged property concerning its repair or replacement or payment of costs incurred in connection with the damage.

4.3.6. TREE PROTECTION. Trees and vegetation which must be removed to perform the Work shall be moved and disposed of properly by the Contractor; however, all other trees and vegetation shall be protected against injury from construction operations.

Contractor shall take extra measures to protect trees, such as erecting barricades, trimming to prevent damage from construction equipment, and installing pipe or other Work by means of hand excavation or tunneling methods. Such trees shall not be endangered by stockpiling excavated material within the dripline or storing equipment against the trunk.

4.3.7. DUST CONTROL. Contractor shall take reasonable measures to prevent unnecessary dust. Earth surfaces subject to dusting shall be kept moist with water or by application of an approved chemical dust inhibitor. Dusty materials in piles or in transit shall be covered when practical to prevent blowing.

Buildings or operating facilities which may be affected adversely by dust shall be adequately protected from dust. Machinery, motors, instrument panels, and similar equipment shall be included with dust screens.

4.3.8. TEMPORARY DRAINAGE PROVISIONS. Contractor shall provide for the drainage of stormwater and such water as may be applied or discharged on the site in the performance of the Work. Drainage facilities shall be adequate to prevent damage to the Work, the site, and adjacent property.

Existing drainage channels and conduits shall be cleaned, enlarged, or supplemented as necessary to carry all increased run-off attributable to Contractor's operations. Dikes shall be constructed as necessary to divert increased run-off from entering adjacent property (except in natural channels) to protect the Work, and to direct water to drainage channels or conduits.

Ponding shall be provided as necessary to prevent downstream flooding.

4.3.9. EROSION CONTROL. Contractor shall prevent erosion of soil on site and adjacent property resulting from his construction activities. Contractor's Erosion Control Plan must be approved by either the City or County Engineer, depending on jurisdiction. Effective measures shall be initiated prior to the commencement of clearing, grading, excavation, or other operation that will disturb the natural protection.

Work shall be scheduled to expose areas subject to erosion for the shortest possible time, and natural vegetation preserved to the greatest extent practicable. Temporary storage and construction buildings shall be located, and construction traffic routed, so as to minimize erosion. Temporary fast-growing vegetation or other suitable ground cover shall be provided as necessary to control run-off.

4.3.10. POLLUTION CONTROL. Contractor shall prevent the pollution of drains and water courses by sanitary wastes, debris, and other substances resulting from construction activities. No sanitary wastes will be permitted to enter any drain or watercourse other than sanitary sewers. No sediment, debris, or

other substance will be permitted to enter sanitary sewers and reasonable measures will be taken to prevent such materials from entering any drain or watercourse.

4.4. **MATERIALS FOR SANITARY, WATER, AND STORM PROJECTS.**

4.4.1. GENERAL.

4.4.1.1. CONCRETE. Portland cement concrete shall be composed of Portland cement, fine and coarse aggregates, and water, proportioned and mixed as required to produce a smooth, workable mixture, and shall be designated by classes according to compressive strength. It shall have a minimum ultimate compressive strength for each class as determined by testing 6" X 12" cylinder samples of concrete in accordance with the requirements of the latest revision of ASTM C39, Standard Method of Test for Compressive Strength of Molded Concrete Cylinders. The aggregate shall be well-graded with a maximum size such that 100% passes a two-inch (2") mesh screen, unless otherwise specified.

4.4.1.1.1. CLASS A CONCRETE. Class A concrete shall have a 28-day compressive strength of 4,000 psi, and is intended for reinforced structures designed for strength and non-permeability. Unless otherwise specified, all reinforced concrete shall be Class A.

4.4.1.1.1.1. REINFORCING STEEL. Reinforcing steel shall conform to the latest revision of ASTM A615. Unless otherwise specified, bars for concrete reinforcement shall be deformed billet steel, grade 40 or 60.

4.4.1.1.2. CLASS B CONCRETE. Class B concrete shall have a 28-day compressive strength of 2,000 psi, and is intended principally for pipe cradles or encasements, for backfill of unauthorized excavation, and for locations where lower-strength concrete is indicated.

4.4.1.2. FORMS. Forms shall be used, whenever necessary, to confine the concrete and shape it to the required lines. All exposed concrete surfaces having slopes steeper than two (horizontal) to one (vertical) shall be formed. The forms shall have sufficient strength and rigidity to hold the concrete and withstand the necessary pressure, tamping, and vibration without deflecting from prescribed lines.

Surfaces of all forms in contact with the concrete shall be clean, rigid, tight, and smooth. Forms treated to prevent bond shall be coated with an approved compound which is not harmful to the concrete and which will nor discolor the finished surface.

Unless otherwise specified, forms for concrete surfaces that will be exposed to view shall be waterproof plywood, press board, or metal. Exposed edges and corners of concrete on the outside or inside of structures shall be chamfered at 45 degrees, such level being one inch (1") on a side unless otherwise specified.

4.4.2. **MATERIALS FOR GRAVITY SANITARY SEWERS.** This section describes the materials to be used in construction of gravity sewers, including sewer pipe, manholes, castings, and other fittings and appurtenances. Large diameter interceptors mains (30” – 72”) shall evaluated on a case by case basis.

4.4.2.1. PIPE AND FITTINGS FOR GRAVITY SEWERS. Shall be made in the U.S.A.

4.4.2.1.1. PLASTIC PIPE. This subsection specifies the materials for gravity sewer pipe made of polyvinyl chloride or polyethylene plastic.

4.4.2.1.1.1. POLYVINYL CHLORIDE (PVC) PIPE. PVC gravity sewers 4"-15" in diameter shall conform to the latest revision of ASTM D-3034 SDR 35. The pipe shall be made of PVC having a minimum cell classification of 12454-B, 12454-C, or 12364-C. Fittings for these diameters of PVC pipe shall also conform to the latest revision of ASTM D-3034 SDR 35 with a minimum cell classification of 12454-B, 12454-C, or 12364-C. Pipe shall have a minimum tensile strength of 34.50 Mpa as defined in ASTM D-1784. Tees and wyes for pipe up to 18" in diameter for service connections shall be factory-made in-line fittings.

PVC gravity sewer pipe 18"-27" in diameter shall conform to the latest revision of ASTM F-679. The pipe shall be made of PVC having a minimum cell classification of 12454-C or 12364-C. Fittings for F-679 PVC pipe shall also conform to the latest revision of ASTM D-3034 SDR 35 with a minimum cell classification of 12454-C or 12364-C. Pipe shall have a minimum tensile strength of 34.50 Mpa as defined in ASTM D-1784. Tees and wyes for pipe greater than 18" in diameter shall be factory-made in-line fittings. Romac Industries "CB" sewer saddle or Inserta-tees may be used if Utilities Engineer permits.

All joints shall be of the elastomeric gasket type meeting ASTM F 477 and installed per the manufacturer's recommendations. Solvent cement joints shall not be used.

All pipe shall be provided with home marks to insure proper gasket seating. The home mark shall be situated so that, on a seated pipe, it is within one-half inch of the bell end of the previous pipe.

All pipe sections and fittings shall be clearly marked to indicate their conformity with the ASTM specifications.

4.4.2.1.1.1.2. WATER-GRADE PVC PIPE. In certain conditions, use of water-grade PVC pipe meeting AWWA Standard C900 may be required for gravity sewers with diameters of 8" to 12". For diameters of 14" to 24", pipe meeting AWWA Standard C905 may be required. Wyes for pipe diameters 8″ through 12″ shall be HARCO (www.harcofittings.com), sized for C900 on the run and SDR-35 on the branch. Larger diameter pipe shall use C900 tees; the lateral may transition to SDR-35 PVC pipe by using a properly sized HARCO C900 to SDR-35 Adapter.

4.4.2.1.1.2. POLYETHYLENE (PE) PIPE. PE pipe may be used (when specified) for gravity sewers with diameters between 18" and 60". The pipe material shall conform to the latest revision of ASTM D-1248 Standard Specification for Polyethylene Plastics Molding and Extrusion Materials, Type II, Class C, Category 5, Grade P-34 and shall be Spirolite brand as manufactured by the Spirolite Corporation, a division of Chevron Company. Any other brand must be approved by the Engineer prior to the bid date.

All joints used with PE pipe must be bell and spigot type with a gasket designed to meet the latest revision of ASTM F-477.

Any special fittings as noted on the plans shall be made with material which conforms to the same specifications as the pipe material.

4.4.2.1.2. VITRIFIED CLAY PIPE (VCP). VCP is NOT an approved material for construction of sanitary sewers within the City of Bloomington jurisdictional area without the express written approval of the Utilities Engineer. VCP shall be manufactured of surface clay, fire clay, shale, or a combination of these materials as specified in the ASTM Specifications. Unless otherwise specified in the Special Conditions or the Drawings, double-strength clay pipe as described in ASTM C-700 shall be used. Pipe shall be free from fracture, large or deep cracks, and surface roughness. The planes at the ends of the pipe shall be perpendicular to the longitudinal axis.

All pipe joints must meet the requirements of ASTM C-425. A PVC or Fiberglas collar instead of a clay bell may be used, but must also conform to ASTM D-1784, Class 12454-B. The type of joint to be used (plain mortar, cement hump, plastic, hot-poured, or any other) shall be submitted to the Engineer for his approval.

All pipe sections and fittings shall be marked as required by the ASTM Specifications.

4.4.2.1.3. DUCTILE IRON PIPE (DIP). Where it is impossible to maintain minimum cover over pipe, Ductile Iron Pipe with an especially resistant lining may be required. DIP shall be manufactured in accordance with the latest revision of ANSI A21.51 and AWWA C151. For sanitary sewer application, DIP shall have ceramic epoxy lining, minimum thickness 40 mils, and shall be **Protecto 401**, as manufactured by Induron Protective Coatings. When field cutting or to repair damage to the lining you must use the repair kit for Protecto 401 as directed by the manufacturer.

4.4.2.1.4. REINFORCED CONCRETE PIPE. All reinforced concrete pipe shall be Class III, IV, or V in accordance with the latest edition of ASTM C 76, wall thickness "B" or "C" as per site conditions. Pipe shall be manufactured from Portland Cement and aggregate as specified herein.

4.4.2.1.4.1. PORTLAND CEMENT. Portland Cement for manufacture of concrete pipe and fittings shall be Type I or Type III and shall conform to ASTM C 150. Upon request, the Contractor shall furnish manufacturer's certificate stating the type of cement used in the manufacture of the pipe furnished.

4.4.2.1.4.2. AGGREGATE. Aggregate for manufacture of concrete pipe and fittings shall conform to ASTM C 33 except that the requirement for gradation shall not apply. Upon request, the Contractor shall furnish manufacturer's certificate stating the type of aggregate used in the manufacture of the pipe furnished.

4.4.2.1.4.3. STEEL REINFORCEMENT. Steel reinforcement shall be in accordance with requirements of the applicable table in ASTM C 76. Reinforcement shall extend full into bell and spigot ends for pipes 36 inch and larger, and shall extend full into the bell of rubber gasket pipes 12 inch and larger. Elliptical reinforcement shall not be permitted. Longitudinal reinforcement shall be continuous, and all reinforcement shall have a minimum concrete cover of 1 inch.

4.4.2.1.4.4. LIFT HOLES. Lift holes shall not be permitted for concrete sanitary sewer pipe.

4.4.2.1.4.5. JOINTS. Concrete pipe shall be furnished with joints using either concrete bell and spigot or zinc coated steel bell and spigot rings, or rubber seal and rings (Anderson Seal or approved equal). All types of joints shall have a groove on the spigot for a rubber "O" ring gasket. Pipe joints using concrete bell and spigot or zinc coated steel bell and spigot rings shall conform to ASTM C 361 except that the gaskets shall be as specified hereinafter. Pipe joints using rubber gaskets shall conform to ASTM C 443 so that the joint will remain watertight for all soil types and groundwater conditions. The steel bell shall be welded to the longitudinal reinforcing, and a steel skirt (minimum 5.75 inches in length and fabricated from 16 gauge metal) shall be continuously welded to the inside face of the steel spigot ring and to the longitudinal reinforcement.

Profile gasket type joints using a self-lubricated gasket (Forsheda Style 138 or approved equal) on a single offset spigot and formed bell are acceptable. Joints shall be sealed with a profile rubber gasket conforming to ASTM C 443 so that the joint will remain watertight under all conditions of service. On request, the joint shall demonstrate the ability to pass a 2 psi pressure test without leakage.

Only one style of joint system will be permitted from structure to structure in a single run of pipe.

Mastic sealer shall not be used to seal reinforced concrete pipe joints.

4.4.2.1.4.6. ABSORPTION LIMIT. Absorption by the reinforced concrete pipe shall not exceed 6% of its dry weight.

4.4.2.1.4.7. MARKINGS. The date of manufacture, class of pipe, and specification designation, size of pipe, name or trademark of the manufacturer, and identification of plant shall be legibly marked on each section of pipe per the ASTM requirement.

4.4.2.1.5. NON-SHEAR PIPE COUPLINGS**.** When connecting one cut section of pipe to another and the gasketed bell-and-spigot system cannot be used, whether pipes are of similar or dissimilar material and size, Contractor shall make this connection by utilizing an approved non-shear coupling or non-shear adapter coupling correctly sized for this purpose. Acceptable non-shear couplings are DFW non-shear coupling by NDS (www.ndspro.com), Cascade Style CSST transition clamp coupling (www.cascademfg.com), and Mission 56 Series ARC coupling. All others must be approved by the Utilities Engineer before installation. For pipes of identical size and material, Contractor may also use a sleeve type repair coupling, as manufactured by HARCO (The Harrington Corporation) (www.harcofittings.com), or prior-approved equal.

4.4.2.2. MANHOLES. Manholes shall be constructed of pre-cast concrete meeting the requirements of ASTM C-478. All manhole sections, including the cone or flat-top, shall be wet-cast; dry-cast sections are not acceptable. The following chart indicates minimum manhole diameters for sanitary sewers entering/exiting a manhole at various ranges of angles:

| | MANHOLE DIAMETERS | |
|---|---|---|
| PIPE SIZE | Pipes Entering/ Leaving at 0-45 Degree Bend | Pipes entering/ Leaving at 45-90 Degree Bend |
| 8"-21" | 48" | 48" |
| 24" | 48" | 60" |
| 27"-30" | 60" | 60" |
| 33"-36" | 60" | 72" |

Minimum manhole diameter shall also be determined by the number of pipes entering and exiting the structure, as well as pipe diameters and angles. To preserve structural integrity, there shall in no case be less than a span of six inches (6″), measured at the narrowest interval, between any two pipes connecting to a manhole. This measurement shall exclude gasket or boot width. Anything smaller than a six inch span will require written acceptance of responsibility from the manhole manufacturer, as well as written permission form the Utilities Engineer.

4.4.2.2.1. GENERAL. The Contractor shall construct all manholes at the locations and of the materials indicated on the drawings and as specified. Manholes shall be designed and constructed to have no more than one foot of fall from invert in to invert out. Greater than one foot of fall will require construction of an outside drop. During sewer design, the Design Engineer shall determine if there will be adequate vertical space to construct the outside drop of the proper diameter pipe in accordance with CBU Standard Detail #2. If he determines that there is not adequate vertical space, the Design Engineer shall adjust the slope of the incoming pipe to leave maximum one foot of fall through the manhole so that an outside drop is not required.

The Design Engineer shall also be aware that, for manholes having more than one inlet pipe, there shall be no more than 0.3 foot difference between invert elevations of the inlet pipes. This will preserve flow characteristics through the manhole and facilitate construction of table and troughs.

4.4.2.2.2. MANHOLE BASES. The manhole base and first riser section shall be one complete pre-cast unit. The invert of all pipe openings shall be at least three inches above the base slab to provide for installation of table and trough. Sewers shall enter and exit the manhole walls as indicated in the Standard Drawings. Openings for these sewers shall either be formed in the casting process, or core-drilled. Openings shall be equipped with an elastomeric gasket or boot as specified in 4.4.2.2.5.

Openings shall be provided in manholes at locations shown on the plans for future connections. All such openings shall have an approved gasket, and shall be temporarily closed by installing a plug or a short section of appropriately sized pipe and a cap .

For manholes on a completely new reach of sanitary sewer, the table and trough may be cast as a part of the base unit, or constructed of masonry brick and non-shrink mortar in accordance with 4.5.2.1.7.2. with written permission of the Utilities Engineer. For replacement manholes to which one or more existing pipes must be connected, openings in the base unit shall be core-drilled on site after removing the old structure and shooting elevations of existing pipe(s) to assure accuracy; table and trough shall be installed on site and constructed of masonry brick and non-shrink mortar in accordance with 4.5.2.1.7.2. In both cases the invert channels shall be smooth with a semi-circular bottom and vertical sides extending

upward to the height of the pipe crown. In the latter case, both table and invert channel shall receive two coats of Drycon (IPA Systems, Inc.) (www.ipasystems.com). Changes of flow direction within manholes shall be made by a smooth curve having as large a radius as possible. The manhole table shall be smooth and slope towards the channel not less than one inch (1") per foot.

4.4.2.2.3. MANHOLE TOPS. Manholes six feet or more in depth shall have eccentric cone tops. Flattops shall be used if indicated on the drawings or when manhole is less than six feet deep. No brick or block shall be used to adjust the elevation of the frame and cover without permission of the Engineer. Cones or flattops shall be set so that no more than 12" of reinforced concrete rings will be required to adjust the top of the manhole casting to grade. All pre-cast tops and riser rings shall meet the requirements in the latest edition of ASTM C-478.

4.4.2.2.4. MANHOLE BARRELS. Pre-cast manhole barrels shall be reinforced concrete conforming to ASTM C-478. Joints between the barrels, between the barrels and the base unit, and between the barrels and the cone or flattop shall be sealed by using an approved rubber gasket in accordance with ASTM C-443, latest edition.

4.4.2.2.5. MANHOLE GASKETS AND BOOTS. To connect a sanitary sewer to a manhole, either a flexible boot KOR-N-SEAL 1 or 2 flexible connector (www.npc.com), cast-in-place Dura-Seal gasket (www.duratech.com), "A"-Lock or “Z”-Lok gaskets (www.a-lok.com) or an approved equal shall be used. Connections to an existing manhole shall be a flexible boot KOR-N-SEAL or approved equal (www.npc.com).

All flexible connectors shall conform to ASTM C-923, and shall be resistant to ozone, weather elements, chemicals including acids and alkalis, animal and vegetable fats, oils and petroleum products.

The stainless steel elements of the connector shall be totally non-magnetic Series 305 stainless steel. The stainless steel clamp shall be capable of sustaining applied torque in excess of eighty (80) inch-pounds.

It shall be the responsibility of the Contractor to submit details of the proposed connection to the Engineer for approval. Connections not approved by the Engineer shall be subject to removal and replacement with an approved connector.

4.4.2.2.6. MANHOLE SEALANTS. There are two acceptable methods of assuring water-tight manhole construction. Method #1 is strongly preferred; Method #2 may be used only with written permission of the Utilities Engineer. Regardless of which waterproofing method is used, Contractor shall plug all lift holes and seal all pipes both internally and externally with a non-shrink grout or an expanding Portland Cement mixture such as OCTOCRETE (IPA Systems, Inc.) (www.ipasystems.com) in accordance with manufacturer's application instructions. The section joints shall be sealed outside with trowelable EZ-STIK all weather Butyl Rubber Sealant as manufactured by Press-Seal Gasket Corporation (www.press-seal.com) or pre-approved equivalent

Method #1: The manhole manufacturer shall give written conformation that all reinforced precast concrete manhole sections contain the inorganic copolymer waterproofing admixture IPANEX, manufactured by IPA Systems, Inc. (www.ipasystems.com), in compliance with manufacturer's dosage and mixing instructions.

Method #2: (Only with written permission of the Utilities Engineer) Before assembly, the entire outer surface of the manhole, including the underside of the manhole base, shall receive a minimum of two coats of FARBERTITE (IPA Systems, Inc.) (www.ipasystems.com) in accordance with manufacturer's application instructions. After assembly (sealing all joints between manhole sections and plugging all lift holes as indicated above), Contractor shall apply a minimum of two coats of DRYCON (IPA Systems, Inc.) (www.ipasystems.com) to the entire manhole interior in accordance with manufacturer's mixing and application instructions.

4.4.2.2.7. CASTINGS. Manhole frames and covers shall be East Jordan Iron Works castings, catalogue number 1020 or 1022 or approved equivalent. Catalog numbers 1037, 1050, or 2995 or equivalent may be used with the permission of the Engineer. Lids shall be Gasket Seal Cover catalog number 1020A, heavy duty, or approved equivalent. The words "SANITARY SEWER" shall be cast in each manhole cover. All castings and lids shall be coated. No type of casting or cover other than East Jordan will be used unless written approval is granted by the Engineer. Castings shall be set in a nominal 1" bed (approximately 0.75"× 1.05") of sealant made of butyl rubber material in flexible rope form. Sealant shall meet all requirements of ASTM C-990 and AASHTO M-198. Sealant shall be PRO-STIK, as manufactured by Press-Seal Gasket Corporation (www.press-seal.com), or pre-approved equivalent.

4.4.2.2.8. STEPS. Manhole steps shall be polypropylene, polypropylene coated steel reinforcing, or an approved non-corrosive fiberglass material. The copolymer polypropylene shall meet the requirements of ASTM D 4101, reinforced with deformed 3/8 of an inch minimum diameter reinforcing steel conforming to ASTM A 615, Grade 60. Cast iron steps are not acceptable.

4.4.3. **MATERIAL FOR PRESSURE SANITARY SEWERS.**

4.4.3.1. GENERAL. The following section governs the materials for force main pipe and fittings. Any deviation from these specifications must be approved in writing by the Utilities Engineer. All materials for sewage force mains and appurtenances shall conform to these specifications. Where particular brands or manufacturers are mentioned, the materials must be furnished as so named. If a brand is listed and followed by "or approved equal," the Contractor may substitute materials of similar quality, if approved in writing by the Utilities Engineer.

4.4.3.2. FORCE MAIN PIPE AND FITTINGS. Shall be made in the U.S.A.

4.4.3.2.1. POLYVINYL CHLORIDE (PVC). PVC pressure pipe may be used in construction of force mains. Pipe shall be SDR-21 (PR200) or C900 (DR-18) or ULTRA BLUE C909.

ULTRA BLUE shall conform to ASTM F 1483, and ASTM D 2241, and shall have a cell classification of 12454-B in conformance with ASTM D 1784. The gasketed joint system shall conform to ASTM D3139. Both SDR-21 and C900 shall have a cell classification of 12454-A or 12454-B according to ASTM D1784. The minimum allowable material shall be PVC 1120. SDR-21 shall be PR200 and conform to ASTM D2241 and D3139. C900 shall have DR=18, 150 psi. All types shall have push-on joints. Elastomeric gaskets shall be manufactured to conform with ASTM F477. Solvent cement joints will not be allowed.

All fittings shall be ductile iron in conformance with ANSI/AWWA C110/A21.10, cement-lined and coated in accordance with the latest revision of ANSI/AWWA C104/A21.4. Valves shall be as listed in 4.4.3.2.5. and following, and must be for wastewater application.

4.4.3.2.1.1. LOCATOR WIRE AND SIGNS. A #10 insulated solid copper wire shall be wrapped around all nonmatallic pipe so that one revolution is made at least every pipe joint. Splices are to be made with an approved connector, and are to be suitably protected against corrosion.

Where the main is laid off the road, the wire is to be brought to the surface approximately every 500 feet to a valve box or air/vacuum valve vault, and a sign post. Where the main is laid in the street, the wire is to be brought into a valve box approximately every 500 feet. Sign post shall be furnished by the Utilities Department; valve boxes to be furnished by Contractor.

4.4.3.2.2. DUCTILE IRON (DIP). Ductile iron pipe shall be manufactured in accordance with the latest revision of ANSI A21.51 and AWWA C151. For 4-inch through 12-inch diameter DIP, Pressure Class shall be 350. For DIP with a diameter larger than 12 inches, Pressure Class shall be determined by the Utilities Engineer on a case by case basis.

For sanitary sewer application, DIP shall have a ceramic epoxy lining, minimum thickness 40 mils, and shall be **Protecto 401**, as manufactured by Induron Protective Coatings. When field cutting or to repair damage to the lining you must use the repair kit for Protecto 401 as directed by the manufacturer.

4.4.3.2.2.1. PIPE JOINTS. Mechanical joints, push-on or flanged joints shall be provided. Mechanical joints and accessories shall conform to AWWA C111, ANSI A21.11. Bolts and nuts shall be corrosive resistant high-strength alloy steel. Push-on joints with rubber O-ring gaskets shall comply with AWWA C111, ANSI A21.11. Flanged joints shall be manufactured with laying dimensions, facing and flanges detailed in accordance with AWWA C115, ANSI A21.15.

4.4.3.2.2.2. PIPE FITTINGS. The material and construction of fittings shall be similar to those of the pipes. Fittings with mechanical joints, bell and spigot joints, and flange joints, shall conform to the dimensions and weights in accordance with the latest revisions of ANSI A21.10 and AWWA C110. Fittings shall be cement-lined and coated in accordance with the latest revision of ANSI/AWWA C104/A21.4.

4.4.3.2.2.3. POLYETHYLENE ENCASEMENT. Ductile iron pipe when requiring poly wrap shall be installed with an 8 mil high-density cross-linked polyethylene encasement material, inclusive of valves and fittings. The material shall be furnished and installed in accordance with AWWA C-105, ANSI A21.5 to provide the pipe with a protective enclosure.

4.4.3.2.3. HIGH DENSITY POLYETHYLENE (HDPE) PIPE. HDPE pipe for force main use shall be 4-inch and larger and shall have a nominal IPS (Iron Pipe Size) O.D. HDPE pipe used in open-cut installations shall have a minimum DR of 11. The pipe shall be produced from a HDPE pipe grade resin meeting the specifications of ASTM D 3350 with a minimum cell classification of 345464C. Pipe shall be made to the dimensions and tolerances specified in the latest version of ASTM F 714, Standard Specification for Polyethylene (PE) Plastic Pipe (SDR-21) Based on Outside Diameter.

4.4.3.2.3.1. HDPE FITTINGS. HDPE fittings shall be in accordance with ASTM D 3261 and shall be manufactured by injection molding, a combination of extrusion and machining, or fabrication from HDPE pipe conforming to this specification; they shall be manufactured from the same resin type and cell classification as the pipe itself. The fittings shall be fully pressure rated and provide a working pressure equal to that of the pipe with an included 2:1 safety factor.

4.4.3.2.3.2. JOINING OF HDPE. Sections of HDPE pipe shall be joined by the butt fusion process into a continuous length of pipe at the job site. The joining process shall be the heat fusion method and shall be performed in strict accordance with the pipe manufacturer's recommendations, including pipe temperature, alignment, and fusion pressure. The heat fusion equipment used in the joining procedures shall be capable of meeting all conditions recommended by the pipe manufacturer. Extrusion welding or hot gas welding of HDPE shall not be used. Mechanical joint adapters or flanges may be used to mechanically connect HDPE pipe to transition points. This joining method shall also be performed in strict accordance with the pipe manufacturer's recommendations.

4.4.3.2.3.3. LOCATOR WIRE AND SIGNS. A #10 insulated solid copper wire shall be wrapped around all nonmetal pipe so that one revolution is made at least every 10 feet. Splices are to be made with an approved connector, and are to be suitably protected against corrosion.

Where the force main is laid off the road, the wire is to be brought to the surface approximately every 500 feet to a valve box or air/vacuum valve vault, and a sign post. Where the force main is laid in the street, the wire is to be brought into a valve box approximately every 500 feet. Sign post shall be furnished by the Utilities Department; valve boxes to be furnished by Contractor.

4.4.3.2.4. (INTENTIONALLY LEFT OPEN)

4.4.3.2.5. VALVES. All valves other than air/vacuum shall be manufactured by M & H Valve Company (www.mh-valve.com), American Flow Control (www.acipco.com), Kennedy Valve Company (www.kennedyvalve.com), Mueller Company (www.muellercompany.com), or U.S. Pipe and Foundry Company (www.uspipe.com).

Valves shall be for direct burial service. Valves shall be for vertical setting with two inch (2") tee wrench nut, shall open counter-clockwise, and shall have "O" ring-type packing. All valves not requiring a vault shall have two-piece cast iron valve box, Models 562-S or 662-S, as manufactured by Tyler Pipe, or approved equivalent. Valve box shall be equipped with a cast iron lid imprinted “SEWER”. A centering device such as Boxlok or an approved equal shall be used to keep the valve box centered.

Vendor shall furnish to the Owner an affidavit of compliance with all provisions of the standard, including testing.

4.4.3.2.5.1. GATE VALVES. Gate valves shall be cast iron body, fully bronze mounted, double-disk type with non-rising stem in accordance with the latest revision of AWWA C509, and shall be designed for use in wastewater applications. All valves shall be open left with a 2-inch cast iron operating nut.

4.4.3.2.5.2. PLUG VALVES. Plug valves shall be cast iron body, eccentric type with flanged ends and designed for use in wastewater applications. Hydrostatic shell test rating shall be 350 psi and seal test rating shall be 175 psi for valves 3" through 12". Hydrostatic shell test rating shall be 300 psi and seal test rating shall be 150 psi for valves 14" and larger.

4.4.3.2.5.3. CHECK VALVES. Check valves shall be cast iron body, bronze mounted, external weight and lever arm, with flanged ends, and designed for use in wastewater applications. Hydrostatic test pressure rating shall be 350 psi and working pressure rating shall be 175 psi for check valves 2.5" through 12". Hydrostatic test pressure rating shall be 300 psi and working pressure rating shall be 150 psi for check valves 14" or larger.

4.4.3.2.5.4. AIR/VACUUM VALVES. Air/vacuum valves for force mains shall be constructed for sanitary sewer use. A Combination valve shall be installed to exhaust large quantities of air during the filling of a main and allow air to re-enter during draining or when a negative pressure occurs. An air release valve shall be installed at high points to permit small quantities of air to escape from the pipe. The inlet and outlet of the valves shall have the same cross-sectional area. The floats shall be guided by a stainless steel guide shaft and seat against a synthetic seat. Valves sized 1/2" through 3" shall have N.P.T. inlets and outlets. Valves sized 4" and larger shall be flanged inlets with plain outlets and protective hoods to prevent debris and foreign matter from entering the valves. All air/vacuum valves shall be constructed of cast iron with stainless steel trim and Buna-N seating. Valves shall be as manufactured by Val-Matic Valve and Mfg. Corp (www.val-matic.com) or approved equal.

Air/vacuum valves must be sized by the design engineer according to volume of main and maximum operating pressure. Valve size must be approved by Utilities Engineer.

Air/vacuum valves are to be installed in an air/vacuum valve vault as detailed in Standard Detail #3.

4.4.3.3. PUMP STATION SPECIFICATIONS. Specifications for pump stations, pumps, wet wells, valve pits, etc. are available in a separate packet in the office of the Utilities Engineer, at 600 East Miller Drive.

4.4.4. **MATERIALS FOR WATER MAINS.** This section describes the materials to be used in construction of water mains, including water pipe, valves, and other fittings and appurtenances. Any deviation from these specifications must be approved in writing by the Utilities Engineer.

4.4.4.1. WATER PIPES AND FITTINGS. Shall be made in the U.S.A.

4.4.4.1.1. DUCTILE IRON (DIP). Ductile iron pipe shall be manufactured in accordance with the latest revision of ANSI A21.51 and AWWA C151. For 3-inch through 12-inch diameter DIP, Pressure Class shall be 350. For DIP with a diameter larger than 12 inches, Pressure Class shall be determined by the Design Engineer and approved by the Utilities Engineer on a case by case basis.

The pipe shall be lined with an approved thin Portland Cement spun lining and a bituminous seal in accordance with the latest revision of ANSI/AWWA C104/A21.

4.4.4.1.1.1. D.I.P. JOINTS. Mechanical joints, push-on or flanged joints shall be provided. Mechanical joints and accessories shall conform to the latest revision of AWWA C111, ANSI A21.11. Bolts and nuts shall be corrosive-resistant, high-strength, low alloy steel. Push-on joints with rubber O-ring gaskets shall comply with AWWA C111, ANSI A21.11. Flanged joints shall be manufactured with laying dimensions, facing and flanges detailed in accordance with AWWA C115, ANSI A21.15.

4.4.4.1.1.2. D.I.P. FITTINGS. The material and construction of fittings shall be similar to those of the pipes. Fittings with mechanical joints, bell and spigot joints, and flange joints, shall conform to the dimensions and weights in accordance with the latest revisions of AWWA C110 and ANSI A21.10. Fittings shall be cement-lined and coated as stated in 4.4.4.1.1., or may be coated with a 6 to 8 mil nominal thickness fusion-bonded epoxy coating conforming to ANSI/AWWA C550 and C116/A21.16.

4.4.4.1.1.3. POLYETHYLENE ENCASEMENT. Dutctile iron pipe when requiring poly wrap shall be installed with an 8 mil high-density cross-linked polyethylene encasement material, inclusive of valves and fittings. The material shall be furnished and installed in accordance with AWWA C-105, ANSI A21.5 to provide the pipe with a protective enclosure.

4.4.4.1.2. POLYVINYL CHLORIDE (PVC). PVC pipe is NOT an approved material for construction of 6" and larger water mains within the City of Bloomington water jurisdiction. In special instances the Utilities Engineer may give written permission to utilize PVC pipe in construction of water mains which are to remain private. This will be done on a case by case basis.

PVC pressure pipe may be used in construction of 2-inch or 4-inch water mains to be taken over and maintained by City of Bloomington Utilities. In such case the 2-inch pipe shall be SDR-21 (PR200), and the 4-inch pipe may be either SDR-21 (PR200) or C900 (DR-14). All service lines connecting to 2-inch PVC mains shall be 1-inch type K copper and shall connect by means of a self-tapping unit with compression connector outlet. Self-tapping unit shall be **FastTap**, as manufactured by **Continental Water Products**, or pre-approved equal. Meter setup shall be in conformance with City of Bloomington Utilities Standard Detail Number 15.

Both SDR-21 and C900 shall have a cell classification of 12454-A or 12454-B according to ASTM D1784. The minimum allowable material shall be PVC 1120. SDR-21 shall be PR200 and conform to ASTM D2241 and D3139. C900 shall have DR=14, 200 psi. Both types shall have push-on joints. Solvent cement joints will not be allowed. All fittings shall be of the type and material recommended by the manufacturer. Elastomeric gaskets shall be manufactured to conform with ASTM F477.

4.4.4.1.2.1. LOCATOR WIRE AND SIGNS. A #10 insulated solid copper wire shall be wrapped around all nonmatallic pipe so that one revolution is made at least every pipe joint. Splices are to be made with an approved connector, and are to be suitably protected against corrosion.

Where the main is laid off the road, the wire is to be brought to the surface approximately every 500 feet to a valve box or air valve vault, and sign post. Where the main is laid in the street, the wire is to be brought into a valve box approximately every 500 feet. Sign post shall be furnished by the Utilities Department; valve boxes to be furnished by Contractor.

4.4.4.1.3. PRESTRESSED CONCRETE CYLINDER PIPE. Prestressed Concrete Cylinder Pipe with I.D. 24" and larger may be used for water transmission mains requiring relatively few taps. Pipe and fittings shall be furnished in accordance with AWWA C301. Exact pipe and fitting materials and design pressures must be approved by the Utilities Engineer.

4.4.4.1.4. COPPER. All 2-inch or less service lines from the main to the meter shall be Type K copper with flared ends in conformance with ASTM B88. Compression or solder joints will not be allowed on any service line between the main and the meter.

4.4.4.1.4.1. FITTINGS FOR SERVICE LINES. All fittings shall be in conformance with ANSI/AWWA C800. Both corporation stops and curb stops shall be ball valve type, brass-bodied, full-port, with a Teflon coated ball. The corp stop shall have a single O-ring and the curb stop double O-rings. Only

flared fittings will be permitted on Type K copper. The curb stop however shall be fitted with a flare by female iron pipe thread for later attachment to yoke. Fittings shall be Ford, McDonald, or Mueller or an approved equivalent, made in the U.S.A.

4.4.4.2. VALVES. All valves other than air release valves and tapping valves shall be manufactured by M&H Valve Company (www.mh-valve.com), American Flow Control (www.acipco.com), Kennedy Valve Company (www.kennedyvalve.com), Mueller Company (www.muellercompany.com), or U.S. Pipe and Foundry Company (www.uspipe.com). No other valves will be considered.

Valves shall be for direct burial service. Valves shall be for vertical setting with two inch (2") tee wrench nut, shall open left (counter-clockwise), and shall have "O" ring-type packing. All valves not requiring a vault shall have two-piece cast iron valve box, Models 562-S or 662-S, as manufactured by Tyler Pipe, or approved equivalent. Valve box shall be equipped with a cast iron lid imprinted “WATER”. A centering device such as Boxlok or an approved equal shall be used to keep the valve box centered.

Vendor shall furnish an affidavit to the Owner assuring compliance with all provisions of the standard, including testing.

4.4.4.2.1. GATE VALVES. All gate valves four inch (4″) through fourteen inch (14″) shall be resilient wedge type with either a cast or ductile iron body and a non-rising stem. The wedge shall be either cast or ductile iron encapsulated with rubber, shall be symmetrical, and seal equally well with the flow in either direction. Gate valves shall be in compliance with the latest version of either AWWA C509 or AWWA C515. Bolting materials shall be stainless steel with the bolting strength required by ASTM A307 and may have either square or hexagonal heads with dimensions conforming to ANSI B18.2.1. All valves shall be open left (counter clockwise) and shall be furnished with a 2-inch cast iron operating nut.

4.4.4.2.2. BUTTERFLY VALVES. All water mains of 16 inches or larger diameter shall require the use of resilient seat butterfly valves in accordance with ANSI/AWWA C504. All valves shall be open left (counter clockwise) and shall be furnished with a 2-inch square cast iron operating nut.

All butterfly valves shall be installed in a precast concrete manhole having a minimum interior diameter of five feet, and in accordance with 4.5.3.4.4. The dimensions of larger valves may require 6-foot I.D. manholes. Manhole casting shall be East Jordan 1020 series with a self-sealing, non-rocking lid imprinted with the word "WATER".

4.4.4.2.3. AIR RELEASE VALVES. Air release valves shall be Val-Matic, model numbers 15, 22, 25 or 38 or approved equal (www.val-matic.com), and shall incorporate the optional vacuum-check feature. All air release valves must be sized by the design engineer according to system capacity and operating pressure, and size must be approved by the Utilities Engineer. Air release valves are to be installed in an air valve vault as detailed in the Standard Detail #3.

4.4.4.2.4. TAPPING VALVES. A tapping valve is a special gate valve designed with end connections and an unobstructed waterway to provide proper alignment and positioning when assembling a tapping sleeve, valve, and machine for tapping pipe dry or under pressure. The connecting flange of the tapping valve mating with the tapping machine must be parallel and concentric with the waterway to provide proper alignment for the tapping operation. The size of the valve waterway shall include appropriate clearance for the diameter of the tapping machine cutter recommended by the valve manufacturer. All tapping valves shall be cast iron body, fully bronze mounted, with a resilient seat and a non-rising stem in accordance with the latest revision of AWWA C509. All tapping valves shall be open left, and shall be furnished with a 2-inch cast iron operating nut. Tapping valves shall have mechanical joint ends, with one end flanged with raised face to match the groove in the tapping machine outlet. All tapping valves shall be manufactured by American Flow Control (www.acipco.com), Kennedy Valve Company (www.kennedyvalve.com), Mueller Company (www.muellercompany.com), or U.S. Pipe (www.uspipe.com).

4.4.4.2.5. TAPPING SLEEVES OR SADDLES. Mechanical joint tapping sleeves shall be used to connect a tapping valve to an existing pressurized main to make a tap where conditions make it impractical to interrupt service to the existing main. The tapping sleeve body consists of two main parts, a back section and a throat section. These are coupled around the existing main by bolts and nuts and

sealed to the main by a gasket. The tapping sleeve body shall be fabricated of carbon steel, stainless steel, cast iron, or ductile iron. The body shall be provided with a test plug for pressurization of the sleeve, valve, and tapping machine assembly just before the cut is made. Bolts and nuts shall be either corrosion resistant, high-strength, low alloy steel, in accordance with AWWA C111, or 18-8 stainless steel. Gaskets shall be Buna-N (Nitrile) in accordance with ASTM D2000 BA508, or pre-approved equal. For all instances where the tap is at least one pipe size smaller than the pipe to be tapped, contractor shall use one of the following sleeves: Ford Style FTS, FTSC, or FTSS; Smith-Blair 622; Romac SST; JCM 412-ESS. For size-on-size taps (where the tap is the same size as the pipe to be tapped) where pipe diameter is 12-inches or less, contractor shall use one of the following: Tyler/Union Ductile Iron MJ Tapping Sleeve; Mueller H-615 MJ Tapping Sleeve. Size-on-size taps for pipe diameters larger than 12-inches will be reviewed by the Utilities Engineer on a case-by-case basis.

4.4.4.3. VALVE MARKERS. A valve marker is to be set near each sectionalizing valve and air release valve. No extra payment will be made for valve markers; the price of each valve marker is to be included in that of the valve it locates.

4.4.4.4. FIRE HYDRANTS. Fire hydrants shall conform to the latest revision of ANSI/AWWA C502 and shall be mechanical joint, with two hose nozzles and one pumper nozzle, with a 1½" pentagon operating nut that opens left (counter-clockwise), and have a valve opening of 5¼". All hydrants shall be Kennedy Guardian (www.kennedyvalve.com), Mueller Centurion (www.muellercompany.com), or Waterous Pacer Classic (www.acipco.com). No other hydrants will be considered. Hydrants shall be painted and coated per the manufacturers specification in colors for the following owners, hydrants to be taken over and maintained by CBU shall receive a thorough coat of silver metallic paint; hydrants to be taken over and maintained by Indiana University shall receive a thorough coat of red paint; hydrants to be privately owned and maintained shall receive a thorough coat of yellow paint.

4.4.4.5. FLUSH HYDRANTS. All flush hydrants, whether installed in grassy areas or in pavement, shall be **Gil model Aquarius 101 GHS, 2-inch Slim Line Hidden Hydrant**, or **Kupferle Model TF500 Flush Hydrant** (www.hydrants.com). All flush hydrants shall be installed in a traffic-rated six-inch valve box with lid. A 2-inch, brass-bodied, double O-ring, full-port valve with a Teflon coated ball shall be installed immediately before either type of flush hydrant. Valve shall be equipped with road type valve box.

4.4.5. **MATERIALS FOR STORM SEWERS.** This section describes materials to be used in design and construction of storm sewers, including pipes, manholes, inlets, catch basins, castings, frames, and covers. Inlets, catch basins, concrete curbs and gutters along all streets, and storm sewers, shall be designed to accommodate peak discharge produced by the ten (10) year design interval storm. All structures shall be protected from the one-hundred (100) year design interval storm, and shall be consistent with the capacity of downstream storm sewer facilities. Storm sewer systems shall be designed using the Rainfall Intensity-Duration-Frequency Curves (IDF Curves) for Bloomington, Indiana. The IDF Curves are developed by CBU utilizing the latest information from the National Weather Service, and are shown on CBU Standard Detail Number 16. Rainfall duration shall be equal to time of concentration. Hydraulic calculations for each run of pipe shall accompany all storm sewer plans submitted to CBU for review. Hydraulic calculations must be prepared by a licensed professional engineer registered in the State of Indiana and engaged in storm drainage design.

4.4.5.1. PIPE AND FITTINGS FOR STORM SEWERS. Shall be made in the U.S.A.

4.4.5.1.1. DUCTILE IRON PIPE (DIP). Ductile Iron Pipe shall be centrifugally cast and shall conform to ANSI A21.51 and AWWA C-151, latest revision. Ductile Iron Pipe shall be Pressure Class 350, 300, 250, 200 or 150. Old pressure classes 50 through 56 will also be allowed when required due to deep burial or high loading. Pressure class shall be determined by the Utilities Engineer on a case-by-case basis.

4.4.5.1.1.1. COATINGS AND LININGS. DIP shall be standard cement lined with an approved bituminous seal coat in accordance with AWWA C-104, ANSI A21.4. Pipe when requiring poly wrap shall be installed with an 8 mil high-density cross-linked polyethylene encasement material, inclusive of fittings. The material shall be furnished and installed in accordance with AWWA C-105, ANSI A21.5 to provide the pipe with a protective enclosure.

4.4.5.1.1.2. JOINTS. Joints may be either push-on or mechanical joints.

4.4.5.1.1.2.1. PUSH-ON JOINTS. The O-ring gaskets sealing the push-on joint shall be made of rubber of special composition having a texture to assure a soil-tight, permanent seal, and shall be the product of a manufacturer having at least five (5) years experience in the manufacture of rubber gaskets for pipe joints. The gasket shall be a continuous ring of flexible joint rubber of a composition and texture resistant to common ingredients of sewage, industrial wastes, and surface runoff, and which will be very highly resistant to conditions likely to be imposed by this service. The gasket shall conform to AWWA C-111, ANSI A 21.11.

4.4.5.1.1.2.2. MECHANICAL JOINTS. Mechanical joints are also acceptable and may be required by the Utilities Engineer in certain circumstances. Mechanical joints and accessories shall conform to AWWA C-110. The nuts and bolts shall be corrosion resistant high-strength low alloy steel.

4.4.5.1.1.3. FITTINGS. Fittings shall be standardized for the type of pipe and joint specified, and shall comply with AWWA C-110, ANSI A 21.10, and AWWA C-153, ANSI A 21.53. Fittings shall be cement lined and seal coated in accordance with 4.5.1.1.1.

4.4.5.1.1.4. MARKINGS. The class designations for the various classes of pipes and fittings shall be cast into fittings in raised letters and numerals, and cast or stamped on the outside of each joint of pipe.

4.4.5.1.2. HIGH DENSITY POLYETHYLENE (HDPE) PIPE. HDPE pipe shall be bell and spigot type with smooth interior walls. The pipe and fittings shall be made from virgin PE compounds which conform to the current edition of the AASHTO Material Specifications for cell classification as defined and described in ASTM D3350. All HDPE pipe shall meet requirements of the current issue of AASHTO M252 and M294 (4″- 60″ diameters).

Manufactured wyes, tees, bends or adapters will only be allowed in place of precast storm sewer manholes, inlets, or catch basins when written permission has been given by the Utilities Engineer

4.4.5.1.2.1. JOINTS. Flexible gasket joints shall be compression type so that, when assembled, the gasket on the pipe end shall be compressed radially in the pipe bell to form a soil-tight seal for all soil types and groundwater conditions.

4.4.5.1.2.2. GASKETS. Gaskets for HDPE shall be of an elastomeric o-ring composition having a texture to assure a soil-tight and permanent seal. The gasket shall be a continuous ring of flexible joint rubber of a composition and texture to restrain common ingredients of sewage, industrial waste, and surface runoff, and which will be highly resistant to conditions likely to be imposed by this service. Gaskets shall conform to all requirements of ASTM F477.

4.4.5.1.2.3. NOMINAL PIPE STIFFNESS. Minimum parallel plate stiffness values for HDPE storm sewer pipe, when tested in accordance with ASTM D2412, shall be as follows: 4″ through 12″ = 49 pii, 15″ = 42 pii, 18″ = 40 pii, 24″ = 34 pii, 30″ = 28 pii, 36″ = 22 pii, 42″ = 20 pii, 48″ = 18 pii, 60″ = 14 pii.

4.4.5.1.2.4. MARKINGS. Each length of HDPE storm sewer pipe shall be clearly marked with the manufacturer's name, trademark, nominal pipe size, production or extrusion code, material cell classification, and ASTM or AASHTO number.

4.4.5.1.3. POLYVINYL CHLORIDE (PVC) PIPE. PVC pipe may only be used for storm sewer construction with written permission of the Utilities Engineer. When approved, it shall conform to the following: PVC storm pipe shall be the integral wall bell and spigot type with elastomeric seal joints and smooth inner walls. Pipe shall meet one of the following standards and related cell classifications:

| | |
|---|---|
| ASTM D 3034 | 12454B or C, 13364B |
| ASTM F 789 | 12164B |
| ASTM F 679 | 12364C, 12454C |
| ASTM F 794 | 12364A |
| ASTM F 949 | 12454B or C |
| AASHTO M304 | 12454C, 12364C |

All PVC storm sewer pipe shall have a minimum pipe stiffness of 46 psi when measured at 5% vertical ring deflection and tested in accordance with ASTM D 2412.

4.4.5.1.3.1. JOINTS. Flexible gasket joints shall be compression type so that, when assembled, the gasket inside the machined groove on the pipe spigot shall be compressed radially in the pipe bell to form a soiltight seal for all soil types and groundwater conditions. The assembly of joints shall be in accordance with the pipe manufacturer's recommendations and ASTM D 3212.

4.4.5.1.3.2. GASKETS. Gaskets for PVC shall be made of rubber of special composition having a texture to assure a watertight, permanent seal, and shall be the product of a manufacturer having at least five (5) years experience in the manufacture of rubber gaskets for pipe joints. The gasket shall be a continuous ring of flexible joint rubber of a composition and texture resistant to common ingredients of sewage, industrial wastes, and surface runoff, and which will be very highly resistant to conditions likely to be imposed by this service. Gaskets shall conform to all requirements of ASTM F 477.

4.4.5.1.3.3. MARKINGS. The date of manufacture, class of pipe, and specification designation, size of pipe, name or trademark of the manufacturer, and identification of plant shall be legibly marked on each section of pipe per the ASTM requirement.

4.4.5.1.4. REINFORCED CONCRETE PIPE. All reinforced concrete pipe shall be Class III, IV, or V in accordance with the latest edition of ASTM C 76, wall thickness "B" or "C" as per site conditions. Pipe shall be manufactured from Portland Cement and aggregate as specified herein.

4.4.5.1.4.1. PORTLAND CEMENT. Portland Cement for manufacture of concrete pipe and fittings shall be Type I or Type III and shall conform to ASTM C 150. Upon request, the Contractor shall furnish manufacturer's certificate stating the type of cement used in the manufacture of the pipe furnished.

4.4.5.1.4.2. AGGREGATE. Aggregate for manufacture of concrete pipe and fittings shall conform to ASTM C 33 except that the requirement for gradation shall not apply. Upon request, the Contractor shall furnish manufacturer's certificate stating the type of aggregate used in the manufacture of the pipe furnished.

4.4.5.1.4.3. STEEL REINFORCEMENT. Steel reinforcement shall be in accordance with requirements of the applicable table in ASTM C 76. Reinforcement shall extend full into bell and spigot ends for pipes 36 inch and larger, and shall extend full into the bell of rubber gasket pipes 12 inch and larger. Elliptical reinforcement shall not be permitted. Longitudinal reinforcement shall be continuous, and all reinforcement shall have a minimum concrete cover of 1 inch.

4.4.5.1.4.4. LIFT HOLES. Lift holes shall not be permitted for concrete pipe.

4.4.5.1.4.5. JOINTS. Concrete pipe shall be furnished with joints using either concrete bell and spigot or zinc coated steel bell and spigot rings, or rubber seal and rings (Anderson Seal or approved equal). All types of joints shall have a groove on the spigot for a rubber "O" ring gasket. Pipe joints using concrete bell and spigot or zinc coated steel bell and spigot rings shall conform to ASTM C 361 except that the gaskets shall be as specified hereinafter. Pipe joints using rubber gaskets shall conform to ASTM C 443 so that the joint will remain soiltight for all soil types and groundwater conditions. The steel bell shall be welded to the longitudinal reinforcing, and a steel skirt (minimum 5.75 inches in length and fabricated

from 16 gauge metal) shall be continuously welded to the inside face of the steel spigot ring and to the longitudinal reinforcement.

Profile gasket type joints using a self-lubricated gasket (Forsheda Style 138 or approved equal) on a single offset spigot and formed bell are acceptable. Joints shall be sealed with a profile rubber gasket conforming to ASTM C 443 so that the joint will remain soiltight under all conditions of service.

Only one style of joint system will be permitted from structure to structure in a single run of pipe.

Mastic sealer shall not be used to seal reinforced concrete pipe joints.

4.4.5.1.4.6. ABSORPTION LIMIT. Absorption by the reinforced concrete pipe shall not exceed 6% of its dry weight.

4.4.5.1.4.7. MARKINGS. The date of manufacture, class of pipe, and specification designation, size of pipe, name or trademark of the manufacturer, and identification of plant shall be legibly marked on each section of pipe per the ASTM requirement.

4.4.5.1.5. SPIRAL RIB (TYPE I.R.) METAL PIPE (SRP). Spiral Rib Pipe may be used on a case-by-case basis with written approval of the Utilities Engineer after review of hydraulic calculations. All Spiral Rib (Type I.R.) metal pipe fabricated under this specification shall be formed from aluminum coated Type 2 sheet conforming to AASHTO M274 (ASTM A 929).

The manufacture of Spiral Rib (Type I.R.) pipe shall be in accordance with the applicable section of AASHTO M36, ASTM A 760. In addition, a 1/8″ diameter rubber cord shall be placed in the lockseam during the manufacturing process.

4.4.5.1.5.1. NOMINAL PIPE WALL THICKNESS. All Spiral Rib pipe provided under this specification shall have wall sectional properties that meet the design requirements of AASHTO Standard Specification for Highway Bridges - Section 12 (ASTM A 796).

4.4.5.1.5.2. JOINTS. External coupling bands will be accepted for use with Spiral Rib pipe. All coupling bands shall be fabricated of the same material type as the pipe and shall be fabricated to overlap an equal amount of each adjoining pipe section. Each pipe end shall be formed to have a minimum of two annular corrugations. Each joint shall utilize closed-cell expanded rubber gaskets. The coupling bands shall be fully corrugated 5-C annular bands with a double-bolted bar-and-strap connector and a nominal 12 inch wide gasket.

4.4.5.1.5.3. GASKETS. The closed-cell expanded rubber gaskets shall be approximately 12 inches wide and approximately 3/8″ thick. The gaskets shall conform to ASTM D 1056, Grade SCE-43-L.

4.4.5.1.5.4. INSTALLATION. Installation of Spiral Rib pipe shall be in conformance with ASTM A 798 - Standard Practice for Installing Factory-made Corrugated Pipe for Sewers.

4.4.5.1.5.5. MARKINGS. The date of manufacture, trademark of the manufacturer, and identification of plant location shall be legibly marked on the outside of each pipe section in accordance with the required Standards.

4.4.5.2. PRECAST AND CAST-IN-PLACE BOX CULVERTS: For both precast and cast-in-place structures, shop drawings showing at a minimum the concrete mix, wall thickness, steel reinforcement details, pipe connections, and structure dimensions, shall be submitted for approval of each structure to be built. The shop drawings must be reviewed and certified by a registered Professional Engineer prior to submittal. Such shop drawings will be reviewed by CBU on a case-by-case basis.

4.4.5.3. OPEN CHANNELS: All open channel design shall conform to the standards set forth in the latest issue of the Monroe County Storm Water Design Ordinance. CBU reserves the right to modify said standards on a case-by-case basis as deemed necessary by the Utilities Engineer. Plans for repair and replacement of existing open channel structures within the CBU jurisdictional area must be reviewed and

certified by a registered Professional Engineer prior to submittal. Such plans will then be reviewed by CBU on a case-by-case basis.

4.4.5.4. DETENTION PONDS AND DAMS. Design of detention ponds and dams shall be in accordance with the standards set forth in the latest issue of the Monroe County Storm Water Design Ordinance. CBU reserves the right to modify said standards on a case-by-case basis as deemed necessary by the Utilities Engineer. Plans for detention ponds and dams within the CBU jurisdictional area must be reviewed and certified by a registered Professional Engineer prior to submittal. Such plans will then be reviewed by CBU on a case-by-case basis.

4.4.5.5. STORM SEWER MANHOLES, INLETS, AND CATCH BASINS. Storm sewer manholes, inlets, and catch basins shall be installed at the locations and elevations shown on the plans. Manholes or inlets are required at the following locations: at the end of each line segment; at all changes in alignment, grade, size, and pipe material; and at all pipe intersections. Catch basins may be constructed using manholes or inlets having the outlet pipe installed minimum 30 inches above the structure base so that sediment and debris may be trapped before entering the storm sewer pipe system.

4.4.5.5.1. STORM SEWER STRUCTURES. Structures for storm sewers may be cast-in-place or precast.

4.4.5.5.1.1. CAST-IN-PLACE STORM SEWER STRUCTURES. For cast-in-place structures, shop drawings showing at a minimum the concrete mix, wall thickness, steel reinforcement details, pipe connections, and structure dimensions, shall be submitted for approval of each structure to be built. The shop drawings must be reviewed and certified by a registered Professional Engineer prior to submittal.

4.4.5.5.1.2. PRECAST STORM SEWER MANHOLES. See Sanitary Sewer Manholes, Sections 4.4.2.2.2. through 4.4.2.2.4. and Sections 4.5.2.1.7.1. through 4.5.2.1.7.4. Storm manholes will not be restricted to one foot of fall through the structure, nor will outside drops be required. Sealing or waterproofing of storm manholes will not be required, but they must be soil tight.

4.4.5.5.1.3. PRECAST CONCRETE INLETS AND CATCH BASINS. Precast concrete box inlets and catch basins shall be constructed in accordance with Indiana Department of Transportation (INDOT) Standard Specifications. Only inlet Type “A”, Type “A” Modified, Type “C”, Type “E”, and Type “J”, and catch basin Type “A”, Type “J”, and Type “W” may be used.

Alternative precast or monolithic box inlets will be accepted provided all standard specifications of INDOT are met or exceeded.

The structural design of precast concrete box inlets and catch basins shall be in full conformance with the requirements of ASTM C 890.

A maximum depth of four feet from the bottom of the casting to outlet pipe invert will be allowed for Type “A” or Type “A” (modified) box inlet structures.

4.4.5.5.1.4. CONCRETE BASES, INVERTS, AND FLOW CHANNELS. Monolithic or precast bases shall be minimum 6 inches thick for 4 foot diameter and minimum 8 inches thick for larger diameter manholes, and shall be constructed of Class A Concrete having a minimum compressive strength of 4,000 psi.

The wall and base thickness of precast box inlet and catch basin structures shall be as specified by the INDOT Standard Specifications and shall be constructed of Class A Concrete having a minimum compressive strength of 4,000 psi.

Manhole table and trough shall be in accordance with Section 4.5.2.1.7.2.

When Contractor is connecting a new pipe to an existing storm structure, the table and trough of the existing structure shall be rebuilt to conform to the standards of a new structure.

4.4.5.5.1.5. ADJUSTMENT OF FRAMES AND COVERS.

4.4.5.5.1.5.1. PRECAST MANHOLE ADJUSTING RINGS. Final adjustments to the elevation of the frame and cover shall be made only by the use of precast concrete adjusting rings conforming to ASTM C 478. Rings shall be of a nominal thickness of not less than two (2) inches. No more than twelve (12) inches total of adjusting rings shall be used to adjust the elevation of a frame and cover.

A soiltight seal shall be provided between the cone or flattop and riser ring, and between adjoining riser rings, by use of PRO-STIK Butyl Rubber Rope as manufactured by Press-Seal Gasket Corporation (www.press-seal.com) or pre-approved equivalent.

4.4.5.5.1.5.2. PRECAST CONCRETE BOX INLETS AND SPACERS. For precast concrete box inlets, the adjustment of casting and grate shall be accomplished using precast concrete spacers of a minimal nominal thickness of six (6) inches. The maximum number of spacers allowed will be four (4). A soiltight seal shall be provided between each component of the precast box inlet and precast concrete spacers by use of non-shrink waterproof mortar or non-asphaltic mastic material.

Adjustment of casting elevation for precast box inlets may be accomplished by using solid concrete brick and mortar to a maximum height of six (6) inches. This type of casting adjustment shall be accomplished in conformance with the following:

1. Solid pre-cast Class A concrete bricks of a nominal thickness of two (2) inches in conformance with ASTM C 139 shall be used.

2. No joint shall exceed 3/8 of an inch in width, and as nearly as practicable, adjoining courses shall break joints at one-half unit intervals.

3. Minimum constructed wall thickness shall be six (6) inches.

4. Mortar for laying bricks shall be composed of one (1) part masonry cement and two (2) parts mortar sand.

5. Both the inside and the outside of the adjustment area shall be plastered to at least ½ of an inch thickness using the mortar mix as in Item 4 above, or a mixture composed of one (1) part of a combination of Portland Cement and hydrated lime and two (2) parts sand. The lime portion of this mix shall not exceed ten percent (10%) of the sand. Plaster coats shall be smooth, clean, and watertight.

4.4.5.5.1.6. CASTINGS, FRAMES, AND COVERS. The plans shall show the use and placement of each casting type. Type of casting shall consider the required square footage of open area needed to convey the estimated stormwater flow. “Bicycle safe” and “pedestrian safe” grates shall be used where deemed necessary by the Utilities Engineer.

Manhole frames and covers shall be East Jordan Iron Works castings, catalogue number 1020 or 1022 or approved equivalent. Catalogue numbers 1037 or 1050 or approved equivalents may be used with the permission of the Utilities Engineer. Lids shall be Gasket Seal Cover catalogue number 1020A, heavy duty, or approved equivalent. The words “STORM SEWER” shall be cast in each manhole cover.

All castings, frames, grates, and lids shall be coated. All inlet and catch basin frames shall be imprinted with the words: “DUMP NO WASTE – DRAINS TO RIVER”. No type of casting, frame, grate, or cover other than East Jordan shall be used unless written approval is granted by the Utilities Engineer.

All castings shall conform to the requirements of ASTM and following:

1. Castings shall be of uniform quality, free from blow holes, porosity, hard spots, shrinkage, distortion, or other defects. Castings shall be smooth and well-cleaned by shot blasting or other approved method.

2. All castings shall be manufactured true to pattern; component parts shall fit together in a satisfactory manner. Round frames and covers shall be of non-rocking design or shall have machined horizontal bearing services to prevent rocking and rattling

under traffic. All castings used for the same application shall be fully interchangeable.

3. All weights shall not deviate from the tolerances permitted by ASTM Standards (i.e., ASTM A 48-83 "Standard Specifications for Gray Iron Castings").

4. All castings shall be manufactured in accordance with ASTM A 48-83 Class 35B, and shall have a minimum tensile strength of 35,000 psi.

4.4.5.5.1.7. MANHOLE AND INLET DIMENSIONS. The following are minimum manhole diameters for storm sewers entering or exiting a manhole at the following range of angles:

| | MANHOLE DIAMETERS | |
|---|---|---|
| PIPE SIZE | Pipes Entering/ Leaving at 0-45 Degree Bend | Pipes entering/ Leaving at 45-90 Degree Bend |
| 12"-21" | 48" | 48" |
| 24" | 48" | 60" |
| 27"-30" | 60" | 60" |
| 33"-36" | 60" | 72" |

Manholes for pipe sizes greater than 36 inches shall be reviewed by the Utilities Engineer on a case-by-case basis.

The following are maximum pipe inside diameters for precast inlets and catch basins:

**MAXIMUM INSIDE DIAMETERS FOR INLETS AND CATCH BASINS**

| **Structure Type** | **Straight Connection** (See Note 1 below) | | **Skew / Corner Connection** (See Note 2 below) | |
|---|---|---|---|---|
| A | 15″ | | 12" | |
| A Modified | 18″ | | 15″ | |
| | **Long Wall / Short Wall** | | **Long Wall / Short Wall** | |
| B | 36″ | 24″ | 24″ | 15″ |
| C | 36″ | 24″ | 24″ | 15″ |
| E | 24″ | 24″ | 15″ | 15″ |
| J | 27″ | 18″ | 18″ | 15″ |

**Note 1:** Straight-out connections should not be made to either precast inlet wall touched by a skew / corner connection unless sufficient box inlet wall area remains on each side of the connecting pipe to assure structural integrity of the precast unit.

**Note 2:** A maximum of two (2) skew / corner connections will be permitted for each precast inlet.

The number and entrance angle of pipe connections, with consideration given to outside pipe diameter(s), shall be as stated above to ensure maintenance of structural integrity of the manhole or inlet structure. If the structural integrity of the manhole or inlet cannot be maintained, a cast-in-place structure will be required. Shop drawings for cast-in-place structures showing at a minimum the concrete mix,

steel reinforcement details, pipe connections, and structure dimensions, shall be submitted for approval of each structure to be built. The shop drawings must be reviewed and certified by a registered Professional Engineer prior to submittal.

With written permission of the Utilities Engineer, a standard manhole structure, fit with a standard inlet casting, may be used in place of a cast-in-place structure to overcome skew problems with interconnecting pipes. Such use of standard manhole structures will be reviewed on a case-by-case basis.

4.4.5.6. STEPS. Manhole steps shall be provided in all storm sewer structures 48 inches in diameter and larger as required to allow access for inspection, cleaning, and repairs. Steps shall only be required above the maximum flow line in each sewer, and essentially only in the risers and cone sections above large box structures.

Manhole steps shall be polypropylene, polypropylene coated steel reinforcing, or an approved non-corrosive fiberglass material. The copolymer polypropylene shall meet the requirements of ASTM D 4101, reinforced with deformed 3/8 of an inch minimum diameter reinforcing steel conforming to ASTM A 615, Grade 60. Cast iron steps are not acceptable.

4.4.5.7. SEWER PIPE TO STORM STRUCTURE CONNECTIONS. Inlet and outlet pipes shall extend through the inlet or outlet walls a sufficient distance to allow placement of grouting material around the pipe diameter both inside and outside the structure wall, preventing leakage around the pipe's outer surface. Inlet and outlet pipes shall not extend through the structure wall to the point that flow is obstructed.

Holes for connection of storm sewer pipes shall be pre-formed by the manufacturer, or by core-drilling the structure. At no time shall the pipe hole exceed pipe outer diameter plus six (6) inches (O.D. + 6″), to ensure proper connection is achieved. Structures with pre-formed thin-wall "knock-outs" will not be permitted unless approved by the Utilities Engineer.

For Reinforced Concrete Pipe, the annular space between the pipe and the precast structure wall shall be filled inside and out with a waterproof, non-shrink mortar such as OCTOCRETE (IPA Systems, Inc.) (www.ipasystems.com), or approved equal, in accordance with the manufacturer's instructions.

PVC pipe, HDPE pipe, DIP, and SRP pipe may also be connected to a structure by use of a flexible boot KOR-N-SEAL 1 or 2 flexible connector (www.npc.com), cast-in-place Dura-Seal gasket (www.duratech.com), "A"-Lok or "Z"-Lok gasket (www.a-lok.com), or Fernco Waterstop gasket (www.4-fernco.com), or approved equals.

4.4.5.8. REJECTION OF PRECAST STORM STRUCTURE SECTIONS. Precast reinforced concrete manholes, risers, inlets, catch basins, and tops shall be subject to rejection for failure to conform to any of the following specification requirements:

1. Fractures or cracks passing through the shell, except for a single crack that does not exceed the depth of the joint.
2. Defects that indicate imperfect proportioning, mixing, and molding.
3. Surface defects indicating honeycombed or open texture.
4. Damaged ends, where such damage would prevent making a satisfactory joint.
5. The internal diameter of the manhole section shall not vary more than one percent (1%) from the nominal diameter.
6. Structure having visible reinforcing steel along the inside or outside surface, except for reinforcement stirrups or spacers used to position the cage or form during manufacture.

## 4.5. INSTALLATION OF SANITARY, WATER, AND STORM MAINS.

4.5.1. **GENERAL.** This section covers excavation work and pipe installation which include the following: clearing, grubbing, and preparation of the site; removal and disposal of all debris; excavation and trenching; handling, storage, transportation, and disposal of all excavated material; sheeting, shoring,

and protection; preparation of subgrades; pumping and dewatering; protection of adjacent property; pipe embedment; laying of pipe; excavation for structures; bedding; backfilling; construction of fills and embankments; surface restoration and regrading; other appurtenant work.

Before commencement of any on-site activity, the Contractor shall verify that a copy of the State Construction Permit is on file in the Office of the Utilities Engineer.

The Contractor shall indicate to the Utilities Inspector, during his initial visit to the site, the nature and storage place of any and all hazardous substances. This shall be updated as necessary.
The Contractor is responsible for ensuring that safe working conditions exist and safety procedures are being followed at the Work site, and shall maintain a trench safety system in compliance with OSHA Part 1926 of the Code of Federal Regulations. The Utilities Department's inspector is **NOT** responsible for policing the Contractor's safety program. If, in the course of routine inspection, an unsafe condition is noted, the inspector will notify the Contractor of this condition and report it to the Engineer. If the condition continues to exist, the inspector shall again notify the Engineer, document the unsafe condition in writing and through a photograph, and leave the job site. The Engineer will contact IOSHA and request that they dispatch an inspector immediately.

Bedding, backfilling, construction fills, and embankments shall not be done during freezing weather except by permission of the Engineer. No backfill, fill, or embankment materials shall be installed on frozen surfaces, nor shall frozen materials, snow, or ice be placed in any backfill, fill, or embankment. All rough grading, fill and compaction shall be complete before construction of any sanitary, storm, or water main.

4.5.1.1. PROTECTION OF THE SITE. Before any excavation is started, adequate protection shall be provided for all lawns, trees, shrubs, landscape work, fences, hydrants, wells, sidewalks and curbs, and other objects that are to remain in place. Such protection shall be maintained as long as necessary to prevent damage from the Contractor's operations. Any damage that may occur shall be repaired to original condition or replaced by the Contractor at no expense to the Owner.

4.5.1.2. TRENCH EXCAVATION. Where pipe grades or elevations are not definitely fixed by the contract drawings, trenches shall be excavated to a depth sufficient to provide a minimum depth of backfill cover over the top of the pipe of 48" except as otherwise ordered or approved by the Utilities Engineer.

When unstable soil conditions are encountered and the trench bottom is not firm, all soft and compressible material shall be excavated and replaced with #1 or #2 crushed stone before placement of the bedding material. As an alternative, with written permission of the Utilities Engineer, an acceptable geo-fabric may be used beneath the bedding material to stabilize the trench bottom.

Trenches shall be excavated to a width which will provide adequate working space for proper pipe installation, jointing, and embedment. However, the minimum trench width between the installed pipe and either trench wall shall be seven inches (7"). The stipulated minimum clearances are not minimum average clearances, but the minimum clear distances which will be permitted between any part of the pipe as laid, and any part, projection, or point of rock, stone, or boulder.

Where necessary to reduce the earth load on trench banks to prevent sliding and caving, the banks may be cut back on slopes which shall not extend lower than one foot (1') above the top of the pipe.

4.5.1.2.1. CLASSIFICATION OF EXCAVATED MATERIALS. Excavated materials shall be classified as earth excavation or rock excavation and shall include whatever materials are encountered, to the depths required, as directed by the Engineer.

4.5.1.2.1.1. EARTH EXCAVATION. Earth excavation shall include earth, all rocks or boulders less than one-half (1/2) cubic yard in volume, all rock which may be removed by scarification by excavator or backhoe, asphalt, and all concrete or masonry structures which, in the opinion of the Engineer, do not require drilling or blasting, or use of hoe-ram for removal.

4.5.1.2.1.2. ROCK EXCAVATION. Rock excavation shall include ledge rock, all boulders exceeding one-half (1/2) cubic yard in volume, and concrete or masonry structures or any other material which, in the opinion of the Engineer, requires drilling and blasting or use of hoe-ram for removal.

4.5.1.2.1.2.1. ROCK EXCAVATION FOR PLACING PIPE. Where rock is encountered in the trench, the Contractor shall open the trench to full depth for sufficient distance to lay one length of pipe. The rock shall be excavated a minimum of six inches (6") below the outside surface of the pipe bell, and at least seven inches (7") from the outside of the pipe bell on each side. For rock depths greater than four feet, rock quantities shall be calculated as in 4.5.1.2.1.2.4. Each section of pipe shall be backfilled immediately after laying. The exposed end of the last pipe shall be covered with sandbags to protect it from damage by flying debris.

4.5.1.2.1.2.2. ROCK EXCAVATION FOR STRUCTURES. For cast-in-place structures, rock excavation shall be no larger than is necessary to facilitate construction and removal of formwork. When precast structures are used, a minimum six inch (6") clearance will be maintained between the structure and any rock. For rock depths greater than four feet, rock quantities shall be calculated as in 4.5.1.2.1.2.4.

4.5.1.2.1.2.3. BLASTING. Blasting will **not be permitted in any circumstances** without written permission of the Utilities Engineer

4.5.1.2.1.2.3.1. GENERAL. The Contractor shall comply with all local, state, and federal laws, ordinances, applicable safety code requirements, and regulations relative to the handling, storage, and use of explosives and the protection of life and property. Suitable methods shall be employed to minimize fly rock. Blasting practices, at the minimum, shall follow the applicable requirements and recommendations of the National Fire Protection Association "NFPA 495-Code for the Manufacture, Transportation, Storage, and Use of Explosives and Blasting Agents", unless local and state requirements are more stringent. The Contractor shall be responsible for obtaining all blasting permits required by all regulating agencies.

Contractor shall erect signboards of adequate size stating that blasting operations are taking place in the area, and such signs shall be clearly visible at all points of access to the area. Contractor shall coordinate the configuration of these signboards with local regulations. Contractor shall utilize a reliable audible warning system to ensure that any personnel in the area are forewarned of the impending detonation of explosives.

Contractor shall be solely responsible for the safety and stability of the excavation slopes for the entire duration of the work. Excavation work and discretionary support methods shall be the responsibility of Contractor. Blasting technique and pattern shall be best suited to the nature of the rock and the particular excavation.

Discretionary support shall be provided by Contractor to maintain safety and stability of the excavation slopes. Discretionary support is likely to be needed depending on several factors, including commonly occurring variability in the subsurface conditions; structure of rock, such as orientation of joints, location of bedding planes, and lithology; and results of blasting. Support may include sheeting and shoring, rock bolts or dowels, concrete, shotcrete, mesh, strapping, and other similar items commonly used in the work of this nature.

The Contractor shall be responsible for all damage caused by his blasting operations.

4.5.1.2.1.2.3.2. BLASTING CONSULTANT. The Contractor shall employ personnel experienced in blasting techniques, and shall retain the services of an independent blasting consultant who shall determine optimum blasting patterns and shall advise Contractor's blasting supervisor. Blasting shall be done under the direct supervision of the blasting consultant. The Contractor shall provide written documentation that the blasting consultant and the person conducting the blast has at least 10 years of experience in design and implementation of rock excavation using controlled blasting methods for similar construction.

The blasting consultant shall maintain a professional liability insurance in the amount of $1,000,000. The evidence of such insurance and the blasting consultant's qualification shall be submitted to the Utilities Engineer at least 14 days in advance of commencing blasting operations.

All drilling and blasting shall be done in a manner which will minimize the disturbance to material outside the required excavation limits. Care shall be taken to ensure against blasts which might damage previously completed portions of the excavation.

4.5.1.2.1.2.3.3. PERMITS AND APPLICABLE STANDARDS**.** All required federal, state, and local permits for blasting and explosives shall be obtained and paid for by the Contractor. Copies of such permits shall be furnished to the Utilities Engineer before any blasting operations may be started.
All blasters and blasting foremen shall be properly licensed in accordance with the applicable laws and regulations of federal, state, and local agencies.

4.5.1.2.1.2.3.4. BLASTING PLAN. At least 14 days before commencing blasting operations, Contractor shall reproduce for record purposes and shall forward to the Utilities Engineer for review, a detailed two part conceptual blasting plan which has been prepared by the independent blasting consultant and reviewed and approved by the Contractor or his safety engineer. After approval by the Utilities Engineer, this blasting plan shall be posted onsite. The plan shall include qualifications of monitoring personnel. Storage and use of explosives at the project site will not be allowed until the blasting plan is approved by the Utilities Engineer.

Part 1 of the conceptual plan shall include a complete summary of proposed transportation, handling, storage, and use of explosives. Part 2 of the conceptual plan shall include the proposed general concept for the blasting and for the control of noise, dust, fly rock, airblast, and vibrations. Test blast planned by Contractor shall be included in Part 2.

In addition to the conceptual plan, individual shot plans shall be reproduced, for record purposes, on a day-to-day basis, and submitted to the Utilities Engineer. Submittal shall be timely so that the plans are received by the Utilities Engineer at least 24 hours before the scheduled time for blasting provided for in the plan. The individual shot plans shall be prepared by the blasting consultant and shall bear his signature. Individual shot plans shall include, but shall not be limited to, the following information:

Drilling patterns

Number, location, inclination, diameter, and depth of drilled holes

Amount, type, and distribution of explosives per hole

Powder factor; time delays; weight of explosives in each delay

Sequence of firing

Time of blast

Total pounds of explosive

Any other pertinent data indicating Contractor’s intent and purpose to produce smooth and sound surfaces of excavation and to project adjacent facilities.

The blast plan shall be revised if the results of blasting do not conform to the overall project objectives and technical requirements of these specifications.

After acceptable standard drilling and blasting procedures have been developed, the individual plan need contain only as a minimum the location, date, time of round detonation, foreman’s name, and reference with the drawing number of previously submitted individual plan. All loading deviations from the previous individual plan shall be noted to provide an accurate record of blasting operations. If conditions change, requiring modifications to the plan, a revised individual plan shall be submitted to the Utilities Engineer for review. After receiving his approval, the modified plan shall be posted onsite.

Contractor shall assume complete responsibility for protecting the existing facilities and the Work under construction. The Utilities Engineer's receipt of the Contractor's blasting plans and procedures shall not relieve the Contractor of his responsibility to perform the Work in accordance with the Contract Documents and to protect life, property, and the Work under construction. All damage resulting from the blasting operations shall be repaired at the Contractor's expense.

4.5.1.2.1.2.3.5. BLASTING PROCEDURES. Selection of blasting procedures is the responsibility of the Contractor and the blasting consultant. All blasting shall be performed in accordance with the best modern practice, using methods and techniques that will preserve the unexcavated rock face and excavation bottom in the best and most stable condition and which will reduce overbreak to a minimum. Shattering or splitting of unexcavated rock or the opening up of any seams in rock not excavated, and the disturbance of rock outside the excavation lines, shall be avoided. All rock damaged by blasting shall be removed. The Utilities Engineer, at his discretion, may require replacement of said damaged and removed rock with crushed stone or concrete.

4.5.1.2.1.2.3.6. BLAST MONITORING**.** At the Utilities Engineer's discretion, certain projects may require blast monitoring as part of the Contractor's blasting plan. If blast monitoring is required, Contractor shall perform the following procedures.

Contractor shall measure baseline ground vibrations at the facilities nearest to the blast areas prior to the start of blasting procedures. Seismographs shall be used to monitor ground vibrations, frequency content of vibration, and peak particle velocity components in three mutually perpendicular directions. A minimum of three seismographs shall be provided. Seismographs shall be calibrated within 90 days of using on the project. Calibration of each seismograph shall be submitted to the Utilities Engineer for review of certification of calibration and the date of calibration before any blasting is performed. Seismographs shall be the type that provide a hard copy printout.

Monitoring shall be performed at three structures nearest the location of the individual blasts (or as directed by the Utilities Engineer).

For vibration frequencies equal to or less than 40 Hz (cycles per second), the peak particle velocity, defined as the maximum of the three velocity components of vibration, at any location shall be less than 1 inch per second. For vibration frequencies greater than 40 Hz the peak particle velocity at any location shall not exceed 2 inches per second and the displacement shall be less than 0.004 inches. In addition, Contractor shall measure air overpressure at the location of the monitors. Air overpressure in each case shall not exceed 0.02 psi. The blasting consultant shall examine these limits of peak particle velocity, displacement, and air overpressure in view of the blast design and condition, proximity of the structures and pipeline, and shall determine further restrictions as necessary to eliminate the risk of damage to these facilities.

Contractor shall monitor vibration frequencies, peak particle velocities, displacements, and air overpressures for any facility for any blast which may create vibrations, displacements, and air overpressure levels more than 25 percent of these limits, as determined by measurements on trial blasts and early production blasting near each affected facility.

Blasting parameters recorded by seismographs shall be analyzed after each shot. Limiting parameters of these specifications or more restrictive limits set by the blasting consultant shall not be exceeded. If monitoring indicates that the limits have been exceeded, critical areas of the site shall be examined for damage and assessments for repairs shall be immediately undertaken. There shall be no further blasting until charges are adjusted to limit the vibration levels allowed by these specifications and/or to prevent damage to facilities.

Copies of measurement records shall be submitted to the Utilities Engineer within 4 hours after each blast.

Any damage to existing structures resulting from the Contractor's operations shall be repaired to the satisfaction of the Utilities Engineer at the Contractor's expense.

4.5.1.2.1.2.3.7. PREBLAST SURVEY. Contractor shall perform a preblast survey of all facilities within five hundred feet of the area to be blasted to determine and document the structural condition of each facility. Video and photographic documentation of all facilities shall be included with the preblast survey report. The video and photographs shall be of sufficient detail to discern any existing cracks or defects. Contractor shall submit the preblast survey report to the Utilities Engineer.

4.5.1.2.1.2.3.8. POSTBLAST SURVEY. Contractor shall perform a postblast survey of the same facilities surveyed in the preblast survey to determine the effect of blasting operations. Contractor shall submit postblast survey report to the Engineer within 30 days of completing the blasting operations.

4.5.1.2.1.2.4. ROCK EXCAVATION PAY LIMITS. Rock quantities will be calculated from measurements taken in the field by the Engineer or his representative, in consultation with the Contractor or his representative. *Only rock that has been so measured will be paid for as rock excavation under this item*. Rock will be paid to the following limits: six inches (6") below all pipes and structures; seven inches (7") horizontal distance outside all pipes, and six inches (6") horizontal distance outside all structures. ***For rock depths of four feet or less, the trench width for payment purposes shall be outside diameter of the pipe plus 14 inches.*** For rock depths greater than four feet, the pay limit shall be ***outside diameter of the pipe plus 14 inches*** up to one foot above the top of the pipe, then increasing one foot in width on each side of the trench for every three feet of increased depth. All calculation of rock pay quantities for claims shall be done in this exact manner. Any rock removed at the direction of the Engineer or his representative will also be measured for payment. No payment will be made for rock that can be removed by scarification using the bucket of a backhoe or excavator.

Contractor will be paid for rock quantities calculated from the field measurements described above at the rate listed on a schedule included in the bid form.

4.5.1.2.2. STOCKPILING OF EXCAVATED MATERIALS. Excavated materials suitable and required for backfilling shall be stored in a neat pile adjacent to the excavation in a manner which causes a minimum of interference with traffic and ensures a maximum of safety for workers in the trench. Excavated materials shall not be placed with sufficient height or proximity to excavation so as to endanger workers due to earth slides or upheavals.

4.5.1.2.3. DISPOSAL OF EXCESS EXCAVATED MATERIALS. All suitable excess excavated material shall be disposed of in a manner and at such locations as approved by the Engineer, and at the Contractor's expense. All unsuitable excavated material, together with all debris, junk, stone, logs, stumps, and roots, shall be removed from the site and disposed of by, and at the expense of, the Contractor.

4.5.1.2.4. UNAUTHORIZED EXCAVATION. Excavation below grade shall be filled with either #11 or #12 crushed stone bedding as directed by the Engineer at no additional cost to the Owner.

4.5.1.2.5. SHEETING AND SHORING. IOSHA regulations 29 C.F.R. 1926, Subpart P, for trench safety systems, shall be considered incorporated into this section. Excavation shall be adequately sheeted and braced to prevent damage to the line, to adjacent structures, utilities, pavements or walks, and to prevent injury to workmen or others. No extra payment to the Contractor shall be made by reason of the Engineer's order to strengthen support for the protection of the Work or workers.

4.5.1.2.6. REMOVAL OF WATER. The Contractor shall provide and maintain adequate dewatering equipment to remove and dispose of surface and ground water entering the excavation.

Excavation shall be maintained in a condition that will permit installation of the pipe without flotation or damage. Surface water shall be diverted or otherwise prevented, to the greatest extent practicable, from causing damage to adjacent property.

If the bottom of the excavation is unsuitable for pipe installation, it shall be further excavated and prepared as the Engineer may direct. Such authorized work shall be paid for as extra work.

4.5.1.2.7. TRENCH MAINTENANCE. The Contractor shall be responsible for all settlement of backfill which may occur within a period of one year after the date of final inspection and acceptance. The Contractor shall make, or cause to be made, all necessary backfill and repairs or replacements appurtenant thereto, within 30 days after notice by the Engineer or Owner.

4.5.1.3. BORING OR TUNNELING. As required in the drawings, or by State Highway Permits, concrete or steel pipe casing shall be bored and jacked under the highway with allowance made for grade and/or cover. A suitable lubricant, such as bentonite, may be applied to the outside surface of the jacked pipe to reduce friction.

If an obstruction that stops progress of the pipe is encountered during installation, the cause of stoppage shall be determined and the installation method modified to best suit the conditions encountered, except that line and grade may not be changed. If the Contractor proposes abandonment of in-place piping and initiation of another attempt at an alternate location, the stymied pipe shall be left in place and filled with grout. Any alternate location must be approved by the Engineer.

After casing is installed, Contractor shall push successive lengths of pipe through to make connection to the open-trenched main. Pipe shall be positioned within casing by use of Cascade stainless steel casing spacers, manufactured by Cascade Waterworks Mfg. Company (www.cascademfg.com), APS stainless steel casing spacers, APS carbon steel casing spacers with fusion-bonded epoxy coating, or, for PVC pipe only, APS polyethylene casing spacers, all as manufactured by Advance Products and Systems, Inc. (www.apsonline.com). All casing spacers shall be installed in compliance with manufacturer's instructions. After pipe has been tested for leakage, both ends of casing shall be sealed with solid concrete brick and non-shrink mortar. A suitable rubber gasket, such as Fernco Waterstop (www.4-fernco.com), shall be installed around all PVC pipe at point where casing is sealed.

The unit price per lineal foot of casing required as herein described shall include all such extra work and materials required in tunneling. Payment for the carrier pipe will be made in addition to the unit price for the footage of the casing. ***Any rock encountered and removed in the actual act of boring, i.e., the calculated volume of the casing pipe, will be paid for at the unit price for conventional rock excavation.***

4.5.1.4. BEDDING. The Contractor shall provide the bedding material as noted below and as indicated on the plans. The cost for bedding material shall be included in the bid price for the main, and is not a separate pay item. Bedding shall be either #11 or #12 crushed stone.

4.5.1.4.1. BENEATH PIPE. All pipe shall be bedded on four inches (4") of either #11 or #12 crushed stone when in soil, and on six inches (6") when the pipe is laid in rock. The stone shall be spread and the surface graded to provide a uniform and continuous support beneath the pipe at all points between pipe joints. It will be permissible to slightly disturb the finished bedding surface by withdrawal of pipe slings or other lifting tackle. After each pipe has been placed, sufficient pipe embedment material shall be deposited and shovel-sliced beneath the haunches of the pipe up to the spring line to hold the pipe in proper position during subsequent operations. This shall be done uniformly and simultaneously on each side of the pipe to prevent lateral displacement of the pipe before primary backfill.

4.5.1.4.2. BENEATH STRUCTURES. Bedding shall be a minimum of 4" of either #11 or #12 crushed stone in soil and 6" in rock. All over-excavation shall be filled with either #11 or #12 crushed stone or Class D Concrete, as ordered by the Engineer, to achieve elevations indicated on the plans.

4.5.1.5. LAYING OF PIPE. Anchors shall be required for stabilization of any pipe having a slope of 20% or greater, see Standard Detail 17.

Every precaution shall be taken to prevent foreign material from entering the pipe during installation. If this proves ineffective, the Engineer may require that, before lowering the pipe into the trench, a heavy, tightly-woven canvas bag of suitable size be placed over each pipe end and left there until connection is to be made to the adjacent pipe.

Each length of pipe shall be inspected while suspended above the trench immediately before installation, with special attention being given to pipe ends and gaskets. Defective pipe or fittings shall be laid aside for inspection by the Engineer, who will prescribe corrective repairs or rejection.

4.5.1.6. BACKFILL. Backfill materials shall be placed and compacted in uniform lifts and shall have a moisture content to assure that maximum density will be obtained with compaction. Primary backfill shall be #11 or #12 crushed stone to a point 12 inches above top of pipe. Secondary backfill above pipe embedment shall conform to the following requirements:

4.5.1.6.1. BENEATH PAVEMENTS, SURFACING, AND DRIVEWAYS. Backfill shall be in accordance with the agency issuing the permit. If no permit is required full-depth #53 stone compacted in six-inch (6") lifts must be used.

4.5.1.6.2. UNDER HIGHWAY SHOULDERS; UNDER FILLS OR EMBANKMENTS. Backfill shall be in accordance with the agency issuing the permit. If no permit is required full-depth #53 stone backfill is required compacted in six-inch (6") lifts if nearest trench edge is within five feet of pavement.

4.5.1.6.3. IN UNIMPROVED AREAS. Backfill may be the same materials as excavated, if it is good native material, but may contain no stone larger than six inches (6") in its greatest dimension.

4.5.1.6.4. AROUND STRUCTURES. Backfill shall be placed and compacted in uniform lifts not to exceed twelve inches (12") in depth.

4.5.1.7. SEPARATION BETWEEN UTILITIES.

4.5.1.7.1. VERTICAL SEPARATION BETWEEN UTILITIES. A minimum of 18 inches vertical separation shall be maintained between all utilities unless otherwise indicated on the Plans or in the Special Conditions, or unless written permission is given by the Engineer.

Sewers crossing water mains shall be laid to maintain a minimum vertical distance of 18 inches between the outside of the water main and the outside of the sewer main. This shall be the case whether the water main is above or below the sewer. The crossing shall be arranged so that the joints in the sewer main will be equidistant and as far as possible from the joints in the water main. The crossing must be at a minimum angle of forty-five degrees (45°) measured from the centerlines of the sanitary sewer and water main. Where a water main crosses under a sewer, adequate structural support shall be provided for the sewer to maintain line and grade.

4.5.1.7.2. HORIZONTAL SEPARATION BETWEEN UTILITIES. A minimum of 10 feet horizontal separation shall be maintained between all utilities unless otherwise indicated on the Plans or in the Special Conditions, or unless written permission is given by the Engineer.

4.5.1.7.3. IF IMPOSSIBLE TO MAINTAIN PROPER VERTICAL OR HORIZONTAL SEPARATION. When it is impossible to maintain proper vertical or horizontal separation as stipulated above, the following construction methods shall apply:

A. The sewer shall be designed and constructed equal to water pipe with minimum 200 psi pressure rating. Actual leakage testing shall be that of normal sanitary sewer pipe.

B. Sanitary sewer and water mains shall not be in direct contact.

C. In crossing, all joints in the sanitary sewer main shall be of compression type and placed equidistantly and as far as possible from the water main.

D. In parallelism, the sanitary sewer and water mains shall be laid on separate trench shelves.

4.5.1.8. SEPARATION BETWEEN CBU MAINS AND TREES OR PERMANENT STRUCTURES. Sanitary, water, or storm mains or appurtenances to be taken over and maintained by CBU shall not be

constructed within ten (10) feet of any tree or permanent structure, nor shall any tree or permanent structure be placed within ten (10) feet of any existing or proposed CBU main or appurtenance without written permission of the Utilities Engineer. A minimum of eight (8) feet of separation shall be maintained between sanitary manholes and water mains, measured from outside of manhole to outside of pipe. Permanent structures shall include, but not be limited to, buildings, sheds, retaining walls, planters, business signs, power poles, anchor wires, light standards, flag poles, other utility lines or appurtenances, or any object of a more or less permanent nature which would hinder or preclude excavation to repair CBU infrastructure.

4.5.2. **INSTALLATION OF SANITARY MAINS.** This section describes the specific methods and general practices to be used in installation of sanitary sewer mains.

4.5.2.1. INSTALLATION OF GRAVITY SEWERS. All gravity sewer pipe shall be installed at the grade indicated on the plans by using an automatic pipe laser and appropriate target matched to the diameter of the pipe being installed. Gravity sewers, when flowing full, shall be designed and constructed with slopes that shall result in average flow velocities of not less than two (2) feet per second in accordance with the following table:

| Pipe Diameter (inches) | Minimum Slope (percent) |
|---|---|
| 8 | 0.40 |
| 10 | 0.28 |
| 12 | 0.22 |
| 14 | 0.17 |
| 15 | 0.15 |
| 16 | 0.14 |
| 18 | 0.12 |
| 21 | 0.10 |
| 24 | 0.08 |
| 27 | 0.067 |
| 30 | 0.058 |
| 33 | 0.052 |
| 36 | 0.046 |
| 39 | 0.041 |
| 42 | 0.037 |

Pipes may not be oversized solely in order to justify using decreased slopes; volume of flow must justify pipe diameter. Both slope and direction shall remain uniform between manholes. All gravity sewer installation shall begin at the farthest downstream point and proceed upstream with the bell ends facing upstream. Anchors shall be required for stabilization on all pipe having a slope greater than 20%: slopes from 20% to 34% require anchors spaced no more than thirty-six (36) feet on center; from 35% to 49% require anchors spaced no more than twenty-four (24) feet on center; greater than 50% require anchors spaced no more than sixteen (16) feet on center.

During laying operations, no debris, tools, clothing, or other materials shall be placed in the pipe. As each length of pipe is placed in the trench, both the spigot end of the pipe being laid and the gasket of the last pipe laid shall receive a coating of approved pipe lubricant. The spigot end shall be centered in the bell and the pipe forced home and brought to appropriate alignment and grade. The pipe shall be secured in place with appropriate backfill material tamped over it. Precautions shall be taken to prevent any material from entering the pipe.

Contractor shall be responsible for taking adequate measures to prevent inflow of surface run-off or groundwater into the City's sanitary sewer system during construction.

**New Sanitary Sewer:** At the start of installation of new sanitary sewer, Contractor shall place a plug in the spigot end of the first new pipe to be placed. This shall be a pneumatic plug with a sealing length greater than the diameter of the pipe. The plug shall be checked periodically and shall remain in place at all times until the sewer is complete and ready for testing.

**Sanitary Sewer Replacement:** During sanitary sewer replacement projects, Contractor shall make a water-tight, temporary connection between the existing pipe and the new pipe at the end of each work day or whenever inclement weather forces a temporary stop in the work.

If the Contractor fails to take adequate measures to prevent such inflow, the result could be surcharging and backup of sewage into homes and businesses downflow from the project area. If the resulting damages are attributable to negligence on the part of the Contractor, the Contractor shall be held liable for those damages.

4.5.2.1.1. INSTALLATION OF PLASTIC PIPE. This subsection specifies installation methods for pipes made of polyvinyl chloride and polyethylene plastic. ASTM D2321 or AWWA C605 and manufacturer's recommended installation procedures shall be followed. All plastic pipe shall be handled with a canvas or nylon sling.

4.5.2.1.1.1. FIELD-CUTTING PLASTIC PIPE.

4.5.2.1.1.1.1. POLYVINYL CHLORIDE (PVC) PIPE. PVC pipe shall be field-cut with an acceptable saw so as to leave a smooth end at right angles to the axis of the pipe. For SDR-35 PVC pipe the cut end shall be beveled with a hand or power tool for insertion into gasketed joint.

4.5.2.1.1.1.2. POLYETHYLENE (PE) PIPE. Spirolite PE pipe is made up in two different configurations: profile pipe and corewall pipe (used only with written permission of Utilities Engineer). Profile (spiral-ribbed) pipe cannot be field-cut. Adjustments in length are made with corewall (smooth-wall) pipe, which is used only for connecting to manholes. Corewall pipe is to be cut and beveled in the same manner as PVC pipe.

A push-plate will be required in seating P.E. pipe. The push-plate must fit neatly inside the bell and provide a sturdy, flat surface to prevent damage to the bell when pushing with the excavator bucket to seat the pipe. Pipe may also be seated by use of a come-along, and a come-along must always be used when seating curved manufactured fittings.

4.5.2.1.1.2. BEDDING AND BACKFILL FOR PLASTIC PIPE. Since all flexible pipe receives a high degree of its bearing strength from the surrounding material, type of bedding and backfill material and their compaction are very important.

4.5.2.1.1.2.1. PVC PIPE. For all SDR-35, F679, C900, and C905 PVC pipe, bedding to be as stated in 4.5.1.4.1. Primary backfill for all pipe shall be #11 or #12 crushed stone to a point 12 inches above top of pipe. Backfill above this point (secondary backfill) shall be as stated in 4.5.1.6. and following.

4.5.2.1.1.2.2. PE PIPE. Bedding shall be either #11 or #12 crushed stone, 1/8th of pipe diameter (4" minimum) on suitable soils, 1/8th of pipe diameter (6" minimum) over rock. Additional foundation for bedding may be needed if the trench bottom is unstable. Primary backfill shall extend to at least 12 inches above the pipe crown and shall be evenly placed on both sides of the pipe in lifts not exceeding 12 inches. Primary backfill shall be shovel-sliced beneath haunches of pipe and shall be mechanically compacted with a vibratory compactor to at least 90% Standard Proctor Density. Secondary backfill shall be as stated in 4.5.1.6. and following.

4.5.2.1.2. INSTALLATION OF VITRIFIED CLAY PIPE (VCP). All VCP shall be installed (only with written permission of Utilities Engineer) in accordance with ASTM C-12.

4.5.2.1.2.1. BEDDING AND BACKFILL FOR VITRIFIED CLAY PIPE. Bedding to be as stated in 4.5.1.4.1. Backfill to be as stated in 4.5.1.6. and following.

4.5.2.1.3. INSTALLATION OF DUCTILE IRON PIPE (DIP). All installation of DIP shall conform to the latest revision of AWWA C600. DIP shall always be handled with canvas or nylon straps (no chains) to

avoid damage to external coating. Any such damage must be repaired by Contractor at no additional cost to Owner.

4.5.2.1.3.1. FIELD-CUTTING DIP. DIP which has been field-cut must be beveled for insertion into gasketed joints and to repair damage to the lining you must use the repair kit for Protecto 401 as directed by the manufacturer.

4.5.2.1.3.2. BEDDING AND BACKFILL FOR DIP. Bedding to be as stated in 4.5.1.4.1. Primary backfill shall be #11 or #12 crushed stone to a point 12 inches above top of pipe. Secondary backfill to be as stated in 4.5.1.6. and following.

4.5.2.1.4. INSTALLATION OF REINFORCED CONCRETE PIPE (R.C.P.).
4.5.2.1.4.1. BEDDING AND BACKFILL FOR REINFORCED CONCRETE PIPE. Bedding shall be as stated in 4.5.1.4.1. Backfill shall be as stated in 4.5.1.6. through 4.5.1.6.3.

4.5.2.1.5. SERVICE CONNECTIONS. Wyes with four inch (4") for single family residence or six inch (6") laterals all others and being of the same size and material as the main, shall be installed for each property, developed or undeveloped, or as indicated on the Plans. House service wyes shall be located no more than 10 feet from the downstream side of the vacant lots unless topography obviously indicates otherwise. In the case of occupied lots, it shall be the Contractor's responsibility to determine the location preferred by the property owner.

The use of tee or wye saddles will be permitted only if those of the factory-made, in-line type cannot be used, as determined by the Utilities Engineer. Such tee or wye saddles must be fitted with a rubber gasket which seals against the main, and must use stainless steel straps for mounting. Fitting and joint material shall be the same as used for the main.

All wyes, unless otherwise specified, shall be inclined upward at an angle not less than 25 degrees nor greater than 45 degrees from the horizontal. Each wye shall be securely sealed by a cap or plug of the same material as the pipe in such a manner that the cap may be removed without injuring the bell or gasket at such time as the house service sewer is installed. Contractor shall place a treated two-by-four or four-by-four extending vertically from the branch of the wye in the trench to a point at least two feet above finished grade to facilitate future location.

4.5.2.1.5.1. SANITARY LATERALS AND CLEAN-OUTS. If the sewer main is laid along one side of the road right-of-way, the service connections for those properties located on the opposite side of the road shall be run to the opposite edge of the right-of-way, maintaining minimum four feet of cover over the lateral at a minimum 1% slope and acceptably plugged or capped. A #10 insulated solid copper locator wire shall be wrapped around all nonmetallic pipes in the road right-of-way and easements so that one revolution is made at least every pipe joint. The wire is to be brought to the surface at the property line or edge of the easement with a clean-out in a casting. Contractor shall place a treated two-by-four or four-by-four extending vertically from the end of the service lateral in the trench to a point at least two feet above finished grade to facilitate future location. This marker shall be painted green to indicate "sewer". In special instances the Utilities Engineer may give written permission for the Contractor to place two laterals in a common trench. In such instances, minimum two feet horizontal separation must be maintained between the two pipes at all points. The Contractor shall include in his bid the costs of all labor, materials, and equipment to install all service connections required. These costs shall include the cost of pipe, bedding, backfill, and road restoration.

When a Contractor is installing a sanitary service lateral between a residence or place of business and a lateral stub-out or a City main, the installation shall be in accordance with Uniform Plumbing Code, Section 409(a). This section states that whenever the elevation of the lowest floor to be served is lower than the casting elevation of the upstream manhole on the main where connection is to be made, a back water check valve will be required on the sanitary lateral. All horizontal in-line check valves 6″ or smaller shall be PVC and shall be Clean Check® as manufactured by Rectorseal (www.rectorseal.com) or Plastic Oddities (www.plasticoddities.com), Inc., or pre-approved equivalent. Since check valves may be

blocked open by solid particles, Utilities Engineering recommends that the check valve be installed in the basement or in a pit to facilitate periodic clearing of the valve, or removal and replacement if necessary.

All sanitary laterals shall have a clean-out at least every 90 feet. All clean-outs, whether in grassy areas or in pavement, shall be sub-surface and protected by a suitable metal casting such as East Jordan Catalogue No. 2975. In grassy areas, the casting shall be provided with a circular concrete collar (anchor) flush with the top of the casting and the ground surface. The collar shall be minimum 12 inches depth and shall be 12 inches minimum diameter with the casting centered in the collar. In pavement, the top of casting shall be flush with the surrounding pavement. Top of clean-out shall be no more than 3 inches below the top of the casting. (See Standard Detail #19)

4.5.2.1.5.2. AREA DRAINS FOR DUMPSTER PADS. All area drains for dumpster pads must connect to the sanitary sewer. To prevent inflow of surface run-off, the drain intake must be equipped with a traffic-rated floor drain with a solid, ductile iron cover, hinged, with locking device to assure positive closure. Casting shall also have a free-standing sediment bucket with lift bar. Casting shall be Traffic Floor Drains Figure Number 2410, as manufactured by Jay R. Smith Mfg. Co. (www.jrsmith.com) or pre-approved equivalent, installed in accordance with manufacturer's instructions.
4.5.2.1.6. SEWER PIPE TO MANHOLE CONNECTIONS. To connect a sanitary sewer to a manhole, either a flexible boot KOR-N-SEAL 1 or 2 flexible connector (www.npc.com), cast-in-place Dura-Seal gasket (www.duratech.com), "A"-Lok or "Z" Lok gasket (www.a-lok.com), or approved equal shall be used. Connections to an existing manhole shall be by core-drilling the opening and insertion of KOR-N-SEAL or approved equal (www.npc.com).

If the flexible boot connection is used, it shall be placed in the reinforced concrete manhole base and secured to the pipe by a stainless steel clamp.

All connections shall provide for a watertight seal between the pipe and manhole. The connector shall be the sole element relied upon to assure a watertight seal of the pipe to the manhole.

4.5.2.1.7. INSTALLATION OF MANHOLES. The Contractor shall construct all manholes at the locations and of the materials indicated on the drawings and as specified. Manholes shall be designed and constructed to have no more than one foot of fall from invert in to invert out. Greater than one foot of fall will require construction of an outside drop. During sewer design, the Design Engineer shall determine if there will be adequate vertical space to construct the outside drop of the proper diameter pipe in accordance with CBU Standard Detail #2. If he determines that there is not adequate vertical space, the Design Engineer shall adjust the slope of the incoming pipe to leave maximum one foot of fall through the manhole so that an outside drop is not required.

The Design Engineer shall also be aware that, for manholes having more than one inlet pipe, there shall be no more than 0.3 foot difference between invert elevations of the inlet pipes. This will preserve flow characteristics through the manhole and facilitate construction of table and troughs.

4.5.2.1.7.1. ASSEMBLY OF MANHOLE BASE, BARREL, AND CONE. Base and first riser section shall be one complete precast unit. Joints between the barrels, between the barrels and the base unit, and between the barrels and cone or flattop shall be sealed by using an approved rubber gasket in accordance with ASTM C443, latest revision, and the section joints shall be sealed outside with Trowelable EZ-STIK All Weather Butyl Rubber Sealant as manufactured by Press-Seal Gasket Corporation (www.press-seal.com) or pre-approved equivalent, in accordance with 4.4.2.2.6. and 4.5.2.1.7.5.

4.5.2.1.7.2. INSTALLATION OF TABLE AND TROUGH. The invert of all pipe openings shall be at least three inches above the base to provide for installation of table and trough. For manholes on a completely new reach of sanitary sewer, the table and trough may be cast as a part of the base unit, or constructed of masonry brick and non-shrink mortar with written permission of the Utilities Engineer. For replacement manholes to which one or more existing pipes must be connected, openings in the base unit shall be core-drilled on site after removing the old structure and shooting elevations of existing pipe(s) to assure accuracy; table and trough shall be installed on site and constructed of masonry brick and non-shrink

mortar. In both cases the invert channels shall be smooth with a semi-circular bottom and vertical sides extending upward to the height of the pipe crown. In the latter case, both table and invert channel shall receive two coats of Drycon (IPA Systems, Inc.) (www.ipasystems.com). Changes of flow direction within manholes shall be made by a smooth curve having as large a radius as possible. The manhole table shall be smooth and slope towards the channel not less than one inch (1") per foot.

4.5.2.1.7.3. INSTALLATION OF MANHOLE STEPS. Manhole steps shall *not* be situated directly above the inlet or outlet pipes, but to one side of the manhole, granting access to the table. Steps shall be installed with non-shrink mortar or epoxy grout.

4.5.2.1.7.4. INSTALLATION OF CASTINGS. Castings shall be set in a nominal 1" bed (approximately 0.75"× 1.05") of sealant made of butyl rubber material in flexible rope form. Sealant shall meet all requirements of ASTM C-990 and AASHTO M-198. Sealant shall be PRO-STIK, as manufactured by Press-Seal Gasket Corporation (www.press-seal.com), or pre-approved equivalent. In paved areas, top of casting shall match finished grade; in unpaved/grassy areas, castings shall be installed so that the top extends a minimum of three inches above finished grade, and surface shall be graded to provide positive surface drainage away from manhole.

No brick or block shall be used to adjust the elevation of the frame and cover without permission of the Utilities Engineer. Cones and flattops shall be set so that no more than 12" of reinforced concrete rings will be required to adjust the top of the manhole casting to grade.

4.5.2.1.7.5. MANHOLE SEALANTS. There are two acceptable methods of assuring water-tight manhole construction. Method #1 is strongly preferred; Method #2 may be used only with written permission of the Utilities Engineer. Regardless of which waterproofing method is used, Contractor shall plug all voids and lift holes and seal around all pipes both internally and externally with a non-shrink grout or an expanding Portland Cement mixture such as OCTOCRETE (IPA Systems, Inc.) (www.ipasystems.com) in accordance with manufacturer's application instructions. The section joints shall be sealed outside with trowelable EZ-STIK all weather Butyl Rubber Sealant as manufactured by Press-Seal Gasket Corporation (www.press-seal.com) or pre-approved equivalent.

> Method #1: The manhole manufacturer shall give written conformation that all reinforced precast concrete manhole sections contain the inorganic copolymer waterproofing admixture IPANEX, manufactured by IPA Systems, Inc. (www.ipasystems.com), in compliance with manufacturer's dosage and mixing instructions.
>
> Method #2: (Only with written permission of the Utilities Engineer) Before assembly, the entire outer surface of the manhole, including the underside of the manhole base, shall receive a minimum of two coats of FARBERTITE (IPA Systems, Inc.) (www.ipasystems.com) in accordance with manufacturer's application instructions. After assembly (sealing all joints between manhole sections and plugging all lift holes as indicated above), Contractor shall apply a minimum of two coats of DRYCON (IPA Systems, Inc.) (www.ipasystems.com) to the entire manhole interior in accordance with manufacturer's mixing and application instructions.

4.5.2.1.7.6. COLD WEATHER INSTALLATION OF MANHOLES: Whenever the atmospheric temperature is 35° F or below, or whenever the atmospheric temperature may fall below 35° F within the curing period, certain phases of manhole installation shall require the written permission of the Utilities Engineer. These critical phases are: sealing of joints between manhole sections, construction of table and trough, waterproofing of manholes (both inside and out), and installation of castings. Contractor must have the approval of the Utilities Engineer for proposed procedures to maintain temperature of grout, mortar, or sealant at a minimum temperature of 50° F while maintaining adequate moisture in the air throughout the curing period. Cold weather installation shall be performed at the risk of the Contractor and shall be removed and replaced at his expense if grout, mortar, or sealant becomes frozen or otherwise damaged due to low temperature.

4.5.2.1.8. SEWER CLEANING. If televising indicates an inordinate amount of silt, stone, or other debris in the new sewer lines, Contractor shall jet-clean those lines with a high-pressure water jetting unit. The

Contractor, at no additional expense to the Owner, shall provide all necessary labor and equipment to jet-clean sewers and to remove and dispose of the collected debris. The Contractor shall also be responsible for providing sufficient water and an appropriate disposal site for debris.

4.5.2.1.9. ABANDONING OF SEWERS. Gravity sanitary sewers which are to be abandoned shall be filled with a thin concrete mix and bulkheaded with a six-inch (6") thick masonry brick and non-shrink, waterproof mortar wall. Manholes to be abandoned shall have the top section removed and shall be filled with #53 stone, compacted in lifts of not more than one foot.

4.5.2.2. DESIGN AND INSTALLATION OF FORCE MAINS. Sanitary force mains shall be designed to avoid the need for air/vacuum release valves. Whenever possible, force mains shall be designed without high points and with the top of the force main below the hydraulic grade line at the minimum pumping rate so that air/vacuum valves will not be needed. If high points in the force main cannot be avoided, an air/vacuum valve or combination valve shall be installed at each significant high point where air could become trapped. A high point shall be considered significant if it is two feet or more above the minimum hydraulic grade line, or, when pumping is intermittent, above the static head line.

Force mains shall incorporate joint restraint to resist thrusts that develop at fittings such as valves, tees, bends, plugs, etc. in the force main pipe. A restrained joint is a special mechanical joint or device that is designed to mechanically couple a calculated number of adjacent joints of pipe together. The entire restrained unit of pipe is then able to transfer thrust forces to the surrounding backfill by friction. Use of joint restraints will be required for all sanitary force main projects within the CBU sewer jurisdictional area. The engineer who designs a force main shall be responsible for incorporating a comprehensive thrust restraint design into the plans. Anchorage design at force main fittings shall be based on pipeline pressures at least 25 percent greater than the maximum pump design shut-off head plus a water hammer allowance with an appropriate factor of safety. The design engineer shall make clear to the contractor in the plan and profile drawings exact lineal footage of pipe and fittings that shall be restrained, and which joint restraints are suitable for each application. The thrust restraint design will be reviewed as a part of standard plan review by CBU Engineering, but the design engineer shall be ultimately responsible for the accuracy and effectiveness of his thrust restraint design for each project. The following restraints are acceptable for use as listed so long as they are made in the U.S.A.:

**For Restraining Mechanical Joint Fittings:**

EBAA Series 1100 for DIP
EBAA Series 2000PV for C900 PVC, and SDR 21 PR200 PVC
Uni-Flange Series 1300-C for C900 PVC
Uni-Flange Series 1300-S for SDR-21 PR200 PVC
Uni-Flange Series 1400 for DIP
Romac Industries Roma Grip for DIP and PVC

**For Restraining Push-on C900 PVC Fittings:**

EBAA Series 2500
Uni-Flange Series 1360-C

**For Restraining Push-on C900 PVC Pipe Joints:**

EBAA Series 1600 (4″ through 12″)
EBAA Series 2800 (14″ through 30″)
Uni-Flange Series 1350-C
Uni-Flange Series 1390-C

**For Restraining Push-on SDR-21 PR200 PVC Pipe Joints:**

EBAA Series 6600 (3″ through 12″)
Uni-Flange Series 1350-S
Uni-Flange Series 1390-S

**For Restraining Push-on DIP Joints:**
EBAA Series 1100 HD
EBAA Series 1700
Uni-Flange Series 1450

**For Restraining Mechanical DIP Joints:**
EBAA Megalug
EBAA Series 1100
Uni-Flange Series 1400
Romac Industries Roma Grip

4.5.2.2.1. DUCTILE IRON PIPE. See 4.5.3.2.1. and following.

4.5.2.2.2. PVC PIPE. See 4.5.3.2.2. and following.

PVC pipe for construction of force mains shall be SDR-21 (PR200), C900 (DR-18), or ETI ULTRA BLUE. A #10 insulated solid copper wire shall be wrapped around the pipe so that one revolution is made at least every pipe joint. Splices are to be made with an approved connector, and are to be suitably protected against corrosion.

Where the main is laid off the road, the wire is to be brought to the surface approximately every 500 feet to a valve box or an air/vacuum valve vault, and a sign post. Where the main is laid in the street, the wire is to be brought into a valve box approximately every 500 feet. Sign posts shall be furnished by the Utilities Department; valve boxes to be furnished by Contractor.

4.5.2.2.3. HIGH DENSITY POLYETHYLENE (HDPE) PIPE. For pipe material see 4.4.3.2.3. For bedding see 4.5.4.3.1. For primary backfill see 4.5.4.4.1.1. For secondary backfill see Sections 4.5.1.6.1. through 4.5.1.6.3.

4.5.2.2.3.1. JOINING OF HDPE. Sections of HDPE pipe shall be joined by the butt fusion process into a continuous length of pipe at the job site. The joining process shall be the heat fusion method and shall be performed in strict accordance with the pipe manufacturer's recommendations, including pipe temperature, alignment, and fusion pressure. The heat fusion equipment used in the joining procedures shall be capable of meeting all conditions recommended by the pipe manufacturer. Extrusion welding or hot gas welding of HDPE shall not be used. Mechanical joint adapters or flanges may be used to mechanically connect HDPE pipe to transition points. This joining method shall also be performed in strict accordance with the pipe manufacturer's recommendations.

4.5.2.2.3.2. LOCATOR WIRE AND SIGNS. A #10 insulated solid copper wire shall be wrapped around the pipe so that one revolution is made at least every 10 feet. Splices are to be made with an approved connector, and are to be suitably protected against corrosion.

Where the force main is laid off the road, the wire is to be brought to the surface approximately every 500 feet to a valve box or air/vacuum valve vault and sign post. Where the force main is laid in the street, the wire is to be brought into a valve box approximately every 500 feet. Sign post shall be furnished by the Utilities Department; valve boxes to be furnished by Contractor.

4.5.2.2.4. FORCE MAIN FITTINGS. All force main fittings shall be as recommended by the pipe manufacturer and shall be installed in accordance with manufacturers' recommendations.

4.5.2.2.4.1. AIR RELEASE VALVES. Air release valves, air/vacuum valves or, combination valves shall be designed for sewer use and shall be installed in a vertical position at significant high points on a force main (see 4.5.2.2.). A saddle with a two-inch (2") tapping corporation shall be installed on the top of the force main at the high point formed by sloping two adjacent joints to a summit. Installations on PVC pipe will require a brace or support to prevent undesired torque on pipe. Air valves are to be installed in an adequately drained and vented air/vacuum valve vault as shown in Standard Detail #3.

4.5.2.2.5. INSTALLATION OF PUMP STATIONS. Specifications for pump stations are available in a separate packet in the office of the Utilities Engineer, 600 East Miller Drive.

4.5.2.2.6. INSTALLATION OF WET WELLS. Wet wells may be pre-cast or poured-in-place structures. Sewer pipes shall connect to the wet well by use of either a flexible boot KOR-N-SEAL 1 OR 2 flexible connector (www.npc.com), cast-in-place Dura-Seal gasket (www.duratech.com), "A"-Lok or "Z" Lok gasket www.a-lok.com), or a pre-approved equal. No more than one pipe may connect to a wet well. All other pipes shall connect to a common manhole adjacent to the wet well to facilitate future elimination of the lift station.

4.5.2.2.6.1. PRE-CAST WET WELL STRUCTURES. All pre-cast wet well structures shall be round, and shall be identical to a sanitary sewer manhole. At the discretion of the Utilities Engineer, deep wet wells may require a base wider than the wet well to provide stability. Joints between sections shall be sealed by using an approved rubber gasket in accordance with ASTM C-443, latest edition. In addition, all joints shall be sealed, internally with a non-shrink grout or an expanding Portland Cement mixture such as Octocrete (IPA Systems, Inc.) (www.ipasystems.com) in accordance with the manufacturer's application instructions. The section joints shall be sealed outside with trowelable EZ-STIK all weather Butyl Rubber Sealant as manufactured by Press-Seal Gasket Corporation (www.press-seal.com) or pre-approved equivalent.

4.5.2.2.6.2. POURED-IN-PLACE WET WELL STRUCTURES. Thickness of base and walls, as well as reinforcement, shall depend on size of the structure and will be reviewed on a case-by-case basis. All joints between separate pours shall be keyed and doweled, and shall be sealed with VOLCLAY WATERSTOP RX, as manufactured by CETCO (www.cetco.com), 1350 W. Shure Drive, Arlington Heights, IL 60004, or pre-approved equal.

4.5.2.2.6.3. WET WELL SEALANTS. There are two acceptable methods of assuring water-tight wet well construction. Method #1 is strongly preferred for pre-cast wet wells, and is always required for poured-in-place wet wells; Method #2 may be used only for pre-cast wet wells and requires written permission of the Utilities Engineer. Regardless of which waterproofing method is used, Contractor shall plug all voids and lift holes and seal around internal joints and all pipes both internally and externally with a non-shrink grout or an expanding Portland Cement mixture such as OCTOCRETE (IPA Systems, Inc.) (www.ipasystems.com) in accordance with manufacturer's application instructions. The section joints shall be sealed outside with trowelable EZ-STIK all weather Butyl Rubber Sealant as manufactured by Press-Seal Gasket Corporation (www.press-seal.com) or pre-approved equivalent.

Method #1: The wet well manufacturer shall give written conformation that each reinforced precast concrete wet well section, or the concrete used to form the poured-in-place wet well, contains the inorganic copolymer waterproofing admixture IPANEX, manufactured by IPA Systems, Inc. (www.ipasystems.com), in compliance with manufacturer's dosage and mixing instructions.

Method #2: (Only for pre-cast wet wells ; requires written permission of the Utilities Engineer) Before assembly, the entire outer surface of the wet well, including the underside of the wet well base, shall receive a minimum of two coats of FARBERTITE (IPA Systems, Inc.) (www.ipasystems.com) in accordance with manufacturer's application instructions. After assembly (sealing all joints between wet well sections and plugging all lift holes as indicated above), Contractor shall apply a minimum of two coats of DRYCON (IPA Systems, Inc.) (www.ipasystems.com) to the entire wet well interior in accordance with manufacturer's mixing and application instructions.

4.5.2.3. DESIGN AND INSTALLATION OF INVERTED SIPHONS: An inverted siphon refers to a "depressed sewer" which would stand full, even with no flow. The purpose of an inverted siphon is to carry sewage flow under an obstruction such as a stream or waterway and regain as much elevation as possible after the obstruction has been passed. Inverted siphons shall have at least two barrels, which shall be minimum 6-inch DIP. All pipe and fittings shall be provided with a ceramic epoxy lining, minimum thickness 40 mils and shall be **Protecto 401** as manufactured by Induron Protective Coatings. The two

pipes shall be positioned parallel, with one pipe, often of smaller diameter, designated as the primary barrel. A lateral overflow weir shall be constructed in the inlet structure to direct the maximum dry-weather flow into the primary barrel. The primary barrel shall be designed with appropriate pipe size, slope, and head to achieve scouring velocities of at least 3.0 feet per second for design average flows. During significant rain events, increased flows will overflow the weir, and be carried by the secondary barrel, which shall be designed to handle the maximum anticipated wet-weather flow. Both the inlet and discharge structures, as well as all pipe and fittings, shall accommodate the nozzle and hose of a jet-rodder to facilitate periodic cleaning. Siphons having large diameter barrels may require an "air jumper" pipe. Such a pipe is approximately one-half the diameter of the primary barrel, and is designed to transport the air set in motion by the moving sewage from the inlet structure to the discharge structure. When both barrels are full, the air cannot be carried through the siphon and will inevitably find an exit from the inlet structure and cause odor problems. In ideal circumstances, the air jumper pipe can be suspended above the hydraulic grade line of the sewer, but in most cases it must run parallel to the siphon, requiring that some provision be made for dewatering the condensate. Under most conditions the Utilities Engineer will require that the entire pipe assembly, or at least some portion thereof, shall be encased in Class B Concrete, minimum cover one foot on all sides. All designs for inverted siphons shall be reviewed on a case-by-case basis by the Utilities Engineer

4.5.2.4. **CURED IN PLACE PIPE (CIPP).**

4.5.2.4.1. INTENT. It is the intent of this section to describe acceptable materials and installation methods for Cured In Place Pipe (CIPP) rehabilitation of sanitary sewers located within the City of Bloomington Utilities (CBU) Sanitary Sewer Jurisdictional Area. These specifications are based on materials and processes developed by Insituform of North America, Inc. and FirstLiner USA, Inc. to install a flexible felt tube, impregnated with a thermosetting resin, into an existing sanitary sewer. Circulating hot water is used to cure the resin into a hard, impermeable, cured-in-place pipe, extending from manhole to manhole in a continuous, tight fitting, watertight pipe-within-a-pipe.

4.5.2.4.1.1. SCOPE OF THE WORK**.** Scope of the work shall be as defined in the Contract, Bid Form and Special Conditions for each individual project.

4.5.2.4.1.2. REFERENCE SPECIFICATIONS AND MANUFACTURER'S STANDARDS. This specification references standard specifications of the American Society for Testing and Materials (ASTM), Insituform of North America, Inc. (INA), and FirstLiner USA, Inc. or CBU approved equal. The latest edition and revision of the manufacturer's standards are made a part of this document by such reference.

4.5.2.4.2. GENERAL REQUIREMENTS.

4.5.2.4.2.1. CORROSION REQUIREMENTS. The CIPP shall meet the chemical resistance requirements of ASTM F1216, Appendix X2.

4.5.2.4.2.2. HYDRAULIC CAPACITY. On request, Contractor shall supply calculations to verify that the CIPP shall have at least 100% of the full-flow capacity of the original pipe before rehabilitation. Calculated capacities may be derived using a commonly accepted roughness coefficient for the original pipe material. A typical roughness coefficient for the CIPP shall be as verified by third-party test data.

4.5.2.4.2.3. CIRCUMFERENTIAL SIZING. The felt-fiber tube shall be fabricated to a size that, when installed, will neatly fit the internal circumference of the existing sanitary sewer pipe as specified by CBU. Allowance for circumferential stretching during insertion shall be made in accordance with manufacturer's standards.

4.5.2.4.2.4. LENGTH. The length of the tube shall be as deemed necessary by Contractor to effectively carry out the insertion from inlet to outlet points. Contractor shall verify the lengths in the field. Individual installation runs can be made over one or more access points as determined in the field by Contractor and approved by CBU.

4.5.2.4.2.5. PHYSICAL PROPERTIES OF MATERIALS. The felt-fiber tubing, including the polyurethane or polyvinyl chloride cover, shall meet the requirements of ASTM F1216, section 5.1. The thermosetting

resin system shall meet the requirements of ASTM F1216, section 5.2. The cured pipe shall conform to the minimum structural standards as listed below:

| **Cured Pipe** | **Standard** | **Results** |
|---|---|---|
| Tensile Stress | ASTM D-638 | 3,000 psi |
| Flexural Stress | ASTM D-790 | 4,000 psi |
| Modulus of Elasticity | ASTM D-790 | 200,000-300,000 psi |

If so directed, Contractor shall furnish, prior to use of the materials, satisfactory written certification of his compliance with the manufacturer's standards for all materials and conformance with methods of the manufacturer's process.

4.5.2.4.2.6. DEVIATIONS. The deterioration of a sanitary sewer is an ongoing process. Should pre-lining inspections reveal the pipes to be in substantially different conditions from those stated in the design considerations, the Contractor shall request a change in thickness, supporting such request with design data in accordance with manufacturer's standard design policies. The deviation, if approved, shall be reflected by the appropriate addition or reduction in the unit cost for that size as shown in the optional portion of the proposal.

4.5.2.4.3. PRE-INSTALLATION PROCEDURES. The following pre-installation procedures shall be utilized unless otherwise approved by the Utilities Engineer.

4.5.2.4.3.1. SAFETY. Contractor shall carry out his operations in strict accordance with all IOSHA and manufacturer's safety requirements. Particular attention is drawn to those safety requirements involving working with scaffolding and entering confined spaces.

4.5.2.4.3.2. CLEANING OF SANITARY SEWERS. Prior to reconstruction of any pipe, it will be the responsibility of City of Bloomington Utilities (CBU) to remove internal deposits from the pipe. If condition of pipe is unsatisfactory, Contractor shall inform CBU, and a decision will be made at that time whether CBU or Contractor shall be responsible for correcting the condition. If it is decided that Contractor shall clean the pipe, additional payment will be made by change order at the rate established on the bid form for Intensive Cleaning.

4.5.2.4.3.3. INSPECTION OF SANITARY SEWERS. Inspection will be performed by experienced CBU personnel trained in locating breaks, obstacles, and service connections by closed circuit television. The interior of the sewer pipe will be carefully inspected to determine the location and extent of any structural failures. The location of any conditions that may prevent proper installation of CIPP into the pipelines will be noted so that these conditions can be corrected. CBU will provide a video tape and suitable log in the office of the Utilities Engineer, 600 East Miller Drive, Bloomington, Indiana, so that the Contractor may review and comment on the target sewer lines before he makes his own television inspection and records.

4.5.2.4.3.4. LINE OBSTRUCTIONS. It will be the responsibility of CBU to clear the pipe of obstructions such as roots, solids, dropped joints or broken pipe that would prevent the insertion of cured-in-place pipe. If inspection reveals an obstruction that cannot be removed by conventional cleaning equipment, then CBU personnel will make a point repair excavation, uncover and remove or repair the obstruction.

4.5.2.4.3.5. BYPASSING FLOW. Contractor, when required, shall provide for the transfer of flow around the section or sections of pipe designated for CIPP. The bypass shall be made by diversion of the flow at an existing upstream manhole or other access point and directing the flow around the section to be taken from service. Bypass lines and pumps, if necessary, shall be of adequate capacity and size to handle the flow. When available, flow volumes of the target sewer will be provided to Contractor by CBU. The proposed bypassing system must be approved in advance by CBU.

4.5.2.4.4. INSTALLATION OF CURED-IN-PLACE PIPE: CIPP installation shall be in accordance with ASTM F1216, section 7.

4.5.2.4.4.1. PREPARATION. Contractor shall allow CBU to inspect the materials and "wet-out" procedure. Contractor shall designate a location where the uncured resin in the original containers and the unimpregnated felt-fiber tube will be vacuum impregnated prior to installation. A roller system shall be used to uniformly distribute the resin throughout the tube. The quantities of liquid thermosetting materials shall be in accordance with manufacturer's standards to provide the lining thickness specified. Quantities shall be sufficient to fill the volume of air voids in the tube, with additional allowances for polymerization shrinkage and the loss of resin through cracks and irregularities in the original pipe wall.

4.5.2.4.4.2. INSERTION. The wet-out, felt-fiber tube shall be inserted through an existing manhole or other approved access. The manufacturer's standards shall be closely followed during the elevated curing temperatures so as not to overstress the felt-fiber and cause damage or failure prior to cure.

4.5.2.4.4.3. CURING. After installation of wet-out felt tube is completed, Contractor shall supply a suitable heat source and water recirculation equipment. The equipment shall be capable of delivering hot water to the far end of the pipe section through a hose, which has been perforated in accordance with manufacturer's recommendations, to uniformly raise the water temperature in the pipe section above the temperature required to affect a cure of the resin. This temperature shall be determined by the resin/catalyst system employed.

4.5.2.4.4.4. TEMPERATURE MONITORING. The heat source shall be fitted with suitable monitors to gauge the temperature of the incoming and outgoing water circulated by the heat exchanger. Another such gauge shall be placed between the impregnated tube and the invert at the far access point to determine the temperature and time of exotherm. Water temperature in the pipe during the cure period shall not be less than 150$^{o}$ F or more than 200$^{o}$ F, as measured at the heat exchanger return line.

4.5.2.4.4.5. COMPLETION OF INITIAL CURE. Initial cure shall be deemed to be completed when inspection of the exposed portions of CIPP indicate that it is hard and sound and the thermocouples indicate than an exotherm has occurred. The cure period shall be of a duration recommended by the resin manufacturer, as modified for the CIPP process being used, during which time the recirculation of the water and cycling of the heat exchanger continue in order to maintain the required temperature.

4.5.2.4.4.6. COOL DOWN. Contractor shall cool the finished CIPP to a temperature below 100$^{o}$ F before relieving the static head in the inversion standpipe. Cool-down may be accomplished by the introduction of cool water into the standpipe, replacing warmer water being drained from the downstream end. Care shall be taken in the release of the static head that a vacuum is not developed that could damage the newly installed CIPP.

4.5.2.4.5. FINISH. The finished CIPP shall be continuous over the entire length of the insertion run and shall be as free as commercially practicable from significant defects, such as foreign inclusions, dry spots, pinholes and delamination. Any defects that will affect the integrity or strength of the CIPP, whether during the warranty period or in the future beyond the warranty period, shall be repaired at the Contractor's expense, in a manner mutually agreeable to both CBU and Contractor.

4.5.2.4.5.1. SEALING THE ENDS. If, due to broken or misaligned pipe at the access points, CIPP fails to make a tight seal, Contractor shall apply a seal at that point. The seal shall be of a resin mixture compatible with the CIPP.

4.5.2.4.5.2. REINSTATEMENT OF SERVICE CONNECTIONS. If Contractor's television inspection indicates that service connection repairs are necessary, all such work will be performed by CBU personnel in advance of CIPP installation. After CIPP has been installed, Contractor shall reinstate all active service connections as designated by CBU. This shall generally be done from the interior of the newly installed CIPP by means of a television camera and a cutting device that reestablishes service connections to minimum 90 percent of previous capacity. If this method should prove impossible, CBU personnel will assist in point-digging and installing an Inserta-Tee to reconnect the service lateral in question. Personnel shall ***never*** physically enter a pipe to reestablish service connections.

4.5.2.4.5.3. TESTING. CIPP samples shall be prepared and tested in accordance with ASTM F1216, section 8.1. The water-tightness of CIPP shall be gauged while curing and under positive head. CIPP

products in which the pipe wall is cured while not in direct contact with the pressurizing fluid must be tested by an alternate method acceptable to CBU.

4.5.2.4.5.4. INSPECTION. Visual inspection shall be in accordance with ASTM F1216, section 8.4. Contractor shall televise each run of sewer before start of work. After the work is completed, Contractor shall televise and record the new CIPP, including the restored connections, on the same tape in order to compare and contrast conditions before and after installation. Said tape shall be submitted to the Utilities Engineer for his review and approval and shall thereafter become the property of CBU.

4.5.2.4.5.5. CLEAN-UP. Upon completion of installation and testing, Contractor shall reinstate the project area affected by his operation to the satisfaction of property owners and CBU.

4.5.2.4.6. MISCELLANEOUS ITEMS.

4.5.2.4.6.1. WATER. All water used for prosecution of the Work as defined in the Contract Documents will be supplied by CBU at no charge to Contractor.

4.5.2.4.6.2. COORDINATION AND COOPERATION WITH CUSTOMERS. At least 48 hours prior to installation of the CIPP, Contractor shall notify each affected resident of the exact start-time that his lateral will be out of service. After installation of the CIPP, Contractor shall promptly reinstate all service laterals as designated by CBU, using the techniques specified herein. Immediately after reinstatement of laterals, Contractor shall notify each resident that his lateral is back in service. Any and all damages arising from failure to promptly reinstate a service lateral as designated by CBU shall be the sole responsibility of the Contractor.

Contractor shall provide at least 48 hours notice to any and all homeowners whose properties he must cross to access easement areas, or whose properties abut easement areas where work is designated to be performed. Contractor shall be responsible for securing the appropriate Right-of-Entry from said homeowners.

It shall be the responsibility of the Contractor to give CBU adequate advance notice of any private property (fences, sheds, clothes lines, shrubbery, etc.) located within easements which might interfere with prosecution of the work by the Contractor. CBU personnel will be responsible for timely removal and replacement of any such obstruction.

4.5.2.4.6.3. PATENTS. Contractor shall warrant and indemnify CBU, the Utilities Service Board, and the City of Bloomington against all claims for patent infringement and any loss thereof.

4.5.2.4.6.4. PAYMENT. Payment for the work as described in the Bid Form, Contract, and Special Conditions, shall be in accordance with the General Conditions, Section GC-49, of the CBU Specifications.

4.5.2.4.6.5. TRAFFIC CONTROL. All traffic maintenance necessary for this project, including but not limited to signage, signalization, barricades, and flagmen, shall be the responsibility of the Contractor. Contractor shall submit his traffic maintenance plan to City Engineering Management minimum ten working days before start of work for their review and approval. No additional payment will be made for this item; it shall be part of the lump-sum bid.

4.5.2.4.6.6. PERMITS. Contractor shall be responsible for obtaining any and all permits necessary for carrying out this project. No additional payment will be made for this item; it shall be part of the lump-sum bid.

4.5.2.5. **PIPE BURSTING.**

4.5.2.5.1. GENERAL. It is the intent of this section to describe acceptable materials and methodologies for rehabilitation of existing sanitary sewers in the City of Bloomington Utilities (CBU) jurisdictional area through the use of a pipe bursting system. This specification is based on the draft “Specification for Mainline Sewer Replacement by Pipe Bursting” currently under development by the International Pipe Bursting Association, a division of NASSCO (National Association of Sewer Service Contractors).

Pipe bursting is a process by which a bursting unit splits or fractures an existing pipe while simultaneously installing a new pipe, usually high-density polyethylene (HDPE), of the same or larger size into the annular space created by the bursting tool's forward movement. The most common methods are referred to as **static**, **impact**, and **dynamic**. The primary difference among these methods is the manner in which the force is generated and transferred to the host pipe during the bursting operation. Static systems are hydraulic, impact systems generally utilize a combination of pneumatic and hydraulic technology, and dynamic systems are based on the use of a horizontal directional drill in combination with either a pneumatic or mechanical bursting tool.

The pipe bursting process is highly dependent on soil conditions, existing pipe material, and the condition of the existing pipe. Burst length, soil conditions, line depth, and new pipe diameter are all critical factors to be considered when planning the pipe bursting process.

The International Pipe Bursting Association (IPBA) normally assigns pipe bursting work to one of three classifications. These classifications are intended for use as general guidelines when considering replacement of existing pipe by bursting techniques.

**Project Design Classifications:**

4.5.2.5.2. SCOPE OF THE WORK.

| Classification | Pipe Depth | Existing Pipe Diameter | New Pipe Diameter Options | Burst Length |
|---|---|---|---|---|
| A – Routine | <12 ft | 4-12 in | Size for Size to 1 Up size | 0-350 ft |
| B – Challenging to Moderately Difficult | >12 ft <18 ft | 12-20 in | 2 Up Size | 350-450 ft |
| C – Difficult to Extremely Difficult | >18 ft | 20-36 in | 3 or More Up Sizes | >450 ft |

4.5.2.5.2.1. OWNER'S RESPONSIBILITY. The Utilities Engineer shall provide a description of the work to be performed by the Contractor in a Request for Quote or an Invitation to Bid. The Utilities Engineer shall also make available to qualified contractors a copy of a videotape of the pipe to be burst.

4.5.2.5.2.2. BIDDER'S RESPONSIBILITY. The Contractor shall submit a quote or bid for the specified work based on a written and/or graphic description provided by the Utilities Engineer. A quote or bid shall be submitted by the Contractor in the format specified by the Utilities Engineer.

4.5.2.5.3. REFERENCE STANDARDS. American Society for Testing Materials (ASTM), West Conshohocken, PA 14428.

A. ASTM D 1238-99
B. ASTM D 1505 98
C. ASTM D 790-00
D. ASTM D 638-99
E. ASTM D 1693-00
F. ASTM D 3350-99
G. ASTM D 618-99
H. ASTM D 2837-98a
I. ASTM 575

4.5.2.5.4. QUALIFICATIONS OF CONTRACTOR. The Contractor's personnel shall be certified by the system manufacturer as fully trained in utilization of the proposed pipe bursting system. The Utilities Engineer may require the Contractor to provide certificates of training for any employee directly involved in the supervision or operation of the pipe bursting system.

Polyethylene pipe jointing shall be performed by personnel trained in the use of butt-fusion equipment and recommended methods for new pipe connections. Personnel directly involved with new pipe installation shall receive training in the proper methods for handling and installing polyethylene pipe. Such training shall be conducted by a qualified representative of the fusion equipment manufacturer. Installation of other materials shall also be performed by personnel qualified by the specific product manufacturer.

The Contractor shall hold CBU and its agents wholly harmless in any legal action resulting from patent infringements.

CBU will utilize the following chart as a guideline in pre-qualifying Contractor experience requirements:

| Job Classification | Job Value | Minimum Requirements |
|---|---|---|
| **A** - Routine | $500,000 or less | Verification by the manufacturer that Contractor's personnel are trained in the use of the equipment. |
| **B** – Challenging to Moderately Difficult | $1,000,000 or less | Verification by the manufacturer that Contractor personnel are trained in the use of the equipment.<br><br>A minimum of 5,000 feet of experience in Class A or more difficult jobs. |
| **C** – Challenging to Moderately Difficult | $1,000,000 or more | Verification by the manufacturer that Contractor's personnel are trained in the use of the equipment.<br><br>A minimum of 5,000 feet of experience in Class A or more difficult jobs. Cumulative Class A and B Income of $1,000,000. |
| **C** – Difficult to Extremely Difficult | $1,000,000 or less | Verification by the manufacturer that Contractor's personnel are trained in the use of the equipment.<br><br>A minimum of 10,000 feet of experience on Class B jobs, to include 3,000 feet of 20" or larger diameter. |
| **C** – Difficult to Extremely Difficult | $1,000,000 or more | Verification by the manufacturer that Contractor's personnel are trained in the use of the equipment.<br><br>A minimum of 10,000 feet of experience on Class B jobs, to include 3,000 feet of 20" or larger diameter.<br><br>Cumulative Class B and C Income of $1,000,000. |

4.5.2.5.5. QUALITY ASSURANCE. The Contractor shall be solely responsible for quality assurance throughout the project. The Contractor shall also be responsible for any costs associated with corrective measures required to replace or repair items not meeting the quality standards specified by CBU.

4.5.2.5.6. SUBMITTALS. The Contractor shall submit the following items for review and approval of the Utilities Engineer in accordance with the Contract Documents. Contractor shall obtain written approval of the submittals by the Utilities Engineer before ordering pipe materials or initiating the pipe replacement process.

A. Verifications of training by the pipe bursting systems manufacturer stating that the operators have been fully trained in the use of the proposed pipe bursting equipment by an authorized representative of the equipment.

B. Evidence of license issued to the Contractor by British Gas or an authorized British Gas sub-licensee.

C. Verification from the pipe manufacturer of training Contractor's personnel in the proper methods for handling and installing new pipe.

D. Verifications of training by the pipe fusion equipment manufacturer that the operators have been fully trained in the use of the fusion equipment by an authorized representative of the equipment manufacturer.

E. Detailed construction procedures including layout plans to include sequence of construction.

F. Locations, sizes, and construction methods for the service reconnection pits.

G. Methods of construction, reconnection, and restoration of existing service laterals.

H. Methods of modification, if required, for existing manholes.

I. Detailed procedures for the installation and bedding of pipe in launching and receiving pits.

J. Bypass pumping plans, including methods and a list of equipment to be utilized.

K. Description of method to remove and dispose of the host pipe, if required.

L. Safety plan in conformance with the Contract Documents and IOSHA regulations.

M. Manufacturer's technical data containing complete information on material composition, physical properties and dimensions of the new pipe and fittings. Manufacturer's recommendations for transport, handling, storage, and repair of pipe and fittings shall be included.

N. Traffic control plans (Must be submitted to City Engineering Management for review and approval minimum 10 working days before start of work).

O. Project Schedule, including schedule of values.

P. Contingency plans for the following conditions:

1. Unforeseen obstruction causes burst stoppage, such as unanticipated changes in host pipe material, repair sections, concrete encasement or cradle, buried or abandoned manhole, or change in direction not depicted on maps provided by CBU.

2. Substantial surface heaving occurring due to depth of the existing pipe vs. the amount of upsizing.

3. Damage to existing service connections and replacement pipe's structural integrity including methods of repair.

4. Damage to other existing utilities.

5. Loss of, and return to, line and grade.

6. Unexpected soil heaving or settlement.

4.5.2.5.7. <u>CONSTRUCTION</u> <u>AND</u> <u>TESTING</u>.

4.5.2.5.7.1. DELIVERY, STORAGE, AND HANDLING OF PIPE AND MATERIALS.

A. The Contractor shall transport, handle, and store pipe and fittings in accordance with the manufacturer's recommendations.

B. New pipe and fittings that are damaged before or during installation shall be repaired or replaced, as recommended by the manufacturer and approved by the Utilities Engineer. The costs of such repair or replacement shall be borne by the Contractor and shall be accomplished prior to installation. Pipe and fittings damaged during or after installation shall be repaired or replaced in accordance with instructions from the Utilities Engineer.

C. The Contractor shall deliver, handle, and store other materials as required to prevent damage. Materials that are damaged or lost shall be repaired or replaced by the Contractor at no additional cost to CBU.

4.5.2.5.7.2. METHODS OF PIPE BURSTING. The most commonly used methods for pipe bursting use static or impact force. Static systems are hydraulic, while impact systems generally involve a combination of pneumatic and hydraulic technology. The primary difference between these methods is the manner in which the force is generated and transferred to the host pipe during the bursting operation.

The pipe bursting tool shall be designed and manufactured to force its way through existing pipe materials by fragmenting the host pipe and compressing the broken pipe sections into the surrounding soil as it progresses. The bursting unit shall generate sufficient force to burst and compact the existing pipeline. See manufacturer's specifications for tool sizes recommended for various pipe diameters as well as parameters associated with tool sizes for allowable upsize percentages.

The pipe bursting tool shall be pulled through the sewer by a cable or rods located at the machine pit. The bursting unit shall pull the polyethylene (PE) pipe behind it as it moves forward from the insertion pit. The bursting head shall incorporate a shield/expander to prevent collapse of the hole ahead of the new pipe insertion. The pipe bursting unit shall be remotely controlled. Sectional replacement pipe shall be pushed as well as pulled behind the bursting head.

The following are different types of pipe bursting equipment:

A. **On-line Pipe Bursting:** On-line pipe bursting is done by creating an impact load in the pipe by applying a "hoop" stress into the pipe and causing it to burst in tension. The dynamic Bursting System consists of a 24,000, 33,000, 50,000 class Horizontal Directional Drill and a Pneumatic (Air Impactor™) or Mechanical (Rotary Impactor™) bursting tool. Both the Air and Mechanical Impactor rely on percussive hammering action to fragment the host pipe through which the tool travels. Simultaneously, the new replacement pipe is installed into the space created by the bursting tool. The Horizontal Directional Drill is used to drill from the surface down to and through the section(s) of pipe to be replaced, then back to the surface where the appropriate bursting tool is attached to the drill rod. The Horizontal Directional Drill then pulls the bursting tool into the old pipe providing a constant tension pulling force and maintaining correct line and grade while the tool bursts the pipe. The technique is aimed at the replacement of gravity pipes as well as pressure pipes, and has been used in diameters ranging from 4 inches to 54 inches and larger.

B. **Pneumatic Pipe Bursting:** Pneumatic pipe bursting is done by creating an impact load in the pipe by applying a "hoop" stress into the pipe causing it to burst in tension. This technique uses a pneumatic bursting head with a properly sized expander and relies on percussive hammering action to break up the old pipe through which the tool travels. Simultaneously, the new pipe is installed into the space created by the pneumatic bursting head and expander. A winch cable is attached to the nose of the bursting head to maintain correct line and grade by providing constant pulling tension and enhancing the percussive force. Winching forces up to 20 tons are typical for this method. This technique is mainly aimed at the replacement of gravity pipes as well as pressure pipes, and has been used in diameters ranging from 4 inches to 54 inches and larger.

C. **Hydraulic Pipe Bursting:** Rather than the pipe being burst from the transfer of pulling or hammering radial force into the plane of the pipe diameter, the bursting head diameter expands, fragmenting the pipe from the inside. The bursting head is equipped with "petals" which open and close under hydraulic pressure. Using hydraulic cylinders, the bursting head first expands to crack the host pipe, then contracts to allow the winch to pull the pipe string forward, while tension is applied to the nose of the head using a winch cable to maintain directional stability. Hydraulic bursting is primarily used for in-line replacement of gravity sewers 6 inches to 20 inches in diameter or larger.

D. **Static Pipe Bursting:** In static pipe bursting a pulling force is applied to a tapered or blunt-nosed bursting head through steel rods, chain, or cable, and new pipe is new pipe is pulled

behind the bursting head through the fragmented host pipe. In this process, the host pipe fails in tension created by the radial force applied to the pipe wall from the bursting head. As the bursting head advances, the host pipe is fragmented and compressed into the adjacent soil, and the new pipe is simultaneously installed into the void. The static pipe bursting winch equipment is modeled after high-powered hydraulic jacks, mounted horizontally, or a high-tension drum type of winch. Pulling forces of up to 225 tons are typical for this method. This method is used in pipes 4 inches to 40 inches in diameter and larger.

4.5.2.5.7.3. REPLACEMENT PIPE MATERIALS. Replacement pipe materials shall be as specified in the Special Conditions and Contract Documents and shall be one of the following:

A. **Polyethylene Plastic Pipe:** Polyethylene Plastic Pipe shall be high-density and meet the applicable requirements of ASTM F714 Polyethylene (PE) Plastic Pipe (SDR-PR) Based on Outside Diameter or AWWA C906, ASTM D1248 and ASTM D3350.

B. **Ductile Iron Pipe:** Ductile Iron Micro-Tunneling Pipe shall meet the requirements of AWWA C110 and shall be specifically designed for jacking by the pipe manufacturer.

C. **Polyvinyl Chloride (PVC) Pipe:** Polyvinyl Chloride Pipe shall be a restrained joining type such as Certa-Lok™ or Yelomine™ and conform to the requirements of ASTM D2241 and/or AWWA C900 or C905, with a DR 11 rating.

4.5.2.5.7.4. LOCATING UTILITIES. CBU will furnish the Contractor with all available documents relevant to the location of all known utilities adjacent to the pipe to be replaced. Prior to commencing work, the Contractor shall field-verify the location of all adjacent utilities and shall expose all interfering and crossing utilities by spot excavating or “pot-holing” at the planar intersection of utilities with the pipe to be replaced and removing the soil from around the utility. The cost of exposing these utilities shall be included in the lump-sum bid.

4.5.2.5.7.5. SUB-SURFACE CONDITIONS. CBU will furnish to the Contractor all available information regarding sub-surface conditions. The Contractor shall verify this information in the field. All additional sub-surface investigations deemed necessary by the Contractor must be approved in advance and in writing by the Utilities Engineer, and shall be included in the Quote or Bid Proposal at no additional cost to CBU. Settlement or heaving of the ground surface during or after construction will not be permitted. The Contractor shall be solely responsible for the costs of repairing any surface heaving or any damages resulting therefrom. However, at the discretion of the Utilities Engineer, if soil conditions are not favorable and pipe up-sizing is required, a minimal amount of ground heaving may be allowed.

4.5.2.5.7.6. LOCATING SERVICE CONNECTIONS. In order to expedite reconnection of services, the Contractor shall locate and expose all sanitary sewer service connections prior to pipe insertion. The Contractor shall exercise due diligence in excavating the existing pipe sufficiently to allow for uniform circumferential expansion of the existing pipe through the service connection pit. Upon commencement of the bursting process, pipe insertion shall be continuous and without interruption from one entry point to another, except as approved by the Utilities Engineer. Upon completion of insertion of the new pipe, the Contractor shall expedite the reconnection of all services to minimize inconvenience to the customers.

4.5.2.5.7.7. PIPE JOINING. The polyethylene pipe (HDPE) shall be assembled and joined at the site using the butt-fusion method to provide a leak-proof joint. Threaded or solvent cement joints are not permitted. Fusion shall be performed by technicians certified by a manufacturer of pipe fusion equipment. The butt-fused joint shall be in true alignment and shall have uniform roll-back beads resulting from the proper use of temperature and pressure. The joint shall be allowed adequate cooling time before removal of pressure. The fused joint shall be watertight and shall have tensile strength equal to or greater than that of the pipe. All joints shall be subject to review and approval by a CBU inspector prior to insertion. The Contractor shall cut out and replace defective joints at no additional cost to CBU. Any section of pipe with obvious deleterious faults may be rejected in its entirety by the Utilities Inspector. However, a defective area of the pipe may be cut out and the joint fused in accordance with the processes stated above.

4.5.2.5.7.8. BYPASSING OF FLOWS. During execution of the work, the Contractor shall be responsible for continuity of sanitary sewer service to each facility connected to the affected section(s) of sanitary sewer main, and shall bypass the flow around the section(s) of pipe to be replaced. The pumps and bypass lines shall be of adequate capacity and size to handle all flows without overflows or backups of sewage to private properties. The Contractor shall be solely responsible for clean-up, repair, property damage costs, and claims resulting from failure of the diversion system.

The Contractor shall present a detailed bypass pumping plan to the Utilities Engineer for his review and approval. This shall include specifications for all pumping equipment, as well as all backup pumping equipment to be held in reserve on the job site. Pumps and by-pass lines shall be of sufficient capacity and size to handle all flows.

All costs for by-pass pumping required during the installation of the pipe and reinstatement of laterals shall be included in the Quote or Bid Proposal at no additional cost to CBU.

4.5.2.5.7.9. PARAMETERS AND CONDITIONS.

4.5.2.5.7.9.1. HOST PIPES SUITABLE FOR BURSTING. CBU will identify the host pipe material and size in the Special Conditions and Contract Documents. Host pipe will be one of the following:

A. **Vitrified Clay Pipe** (VCP) in the 4 inch to 42 inch diameters commonly used in sanitary sewers is very brittle and can be readily burst. The ability to fracture the pipe and compact the fragments into the surrounding soil make it an ideal host pipe. It should be noted that concrete encased point repairs, and concrete adjacent to manholes or structures, may interfere with, or even halt, the bursting process.

B. **Concrete Pipe** of all sizes has been commonly used in sanitary sewers, and may or may not contain steel reinforcement. Normally, 12 inch diameter and smaller is non-reinforced concrete pipe and fractures similarly to VCP. The amount of reinforcement, i.e. single or double cage, will normally dictate the burst type selection and success.

C. **Cast Iron Pipe** (CIP) has been used in sanitary sewers and can be very brittle, but slightly different from VCP. Although it fractures easily, it requires special leading equipment to protect the winch rope from damage. Bell and spigot type joints for CIP require a blade-type nose extension to help crack the relatively large cross-section of material contained in the joint, i.e. lead, jute or hemp, asphalt and/or elastomeric materials. A new HDPE pipe being installed in CIP should have a DR 17 or lower to prevent sharp fragments from damaging the pipe.

D. **Asbestos Cement** (AC) pipe has been used in all utilities and exhibits good bursting features similar to VCP. AC pipe contains asbestos material, which is carcinogenic. Therefore, pipe bursting is much safer than direct excavation and replacement.

E. **Plastic Pipes** (i.e. PVC, PE, ABS, et al) all possess varying material characteristics. Most plastics must be split longitudinally using special cutting blades on nose extensions. This may not permit sufficient soil expansion and create higher levels of friction on the new pipe being pulled in. Normally the fragments are strips and do not cause damage to the new pipe.

F. **Steel and Ductile Iron Pipe** (DIP) must be split by blades. This process is used in lieu of ripping, bursting, or tearing the metal pipe.

4.5.2.5.7.9.2. HOST PIPE SIZE. Host pipe size will effect both hammer/expander combinations and winch selection. Small diameter pipe in difficult soil conditions can present problems because a larger, more powerful hammer will not fit inside the host pipe. Special nose tools may be adapted to solve these problems.

4.5.2.5.7.9.3. HOST PIPE DEPTH. The depth of the host pipe affects the bursting process in a number of ways, such as:

A. Existence of groundwater or greater groundwater depth requires dewatering, or additional dewatering.

B. Soil expansion subsequent to the pipe burst may become more difficult due to the additional soil weight.

C. Depending on the type of soil, upsizing new pipe may require additional soil expansion.

D. Entrance and exit pits will require additional shoring due to required safety procedures.

E. The magnitude of an allowable bend in alignment may require reduction due to the additional soil load.

4.5.2.5.7.9.4. SURROUNDING SOIL TYPES. The type of soil surrounding the host pipe should be identified. Some soil types are easily expanded and may remain in the expanded diameter permitting relative ease of new pipe pull-in. Other soils may be loose and/or running, and may require the use of Bentonite or polymers that provide some structural support, permitting new pipe pull-in. Very weak soils may not support the weight of the pipe bursting equipment, and should be avoided.

4.5.2.5.7.9.5. NEW PIPE AND SIZE. Most pipe bursting projects utilize fused lengths of HDPE pipe. The wall thickness of HDPE is identified by its dimensional ratio (DR) for a given size. The lower the DR the greater the wall thickness. Required pipe DR for a project will be clearly stated in the Special Conditions or Bid Documents.

The ability to upsize or install a new pipe larger in diameter than the host pipe is unique to pipe bursting. The amount of upsize is limited by a combination of all the host pipe parameters, and generally upsizing by one or two sizes can be accomplished (e.g., 6-inch to 8-inch or 6-inch to 10-inch, constituting a 33% to 67% increase in diameter).

4.5.2.5.7.9.6. SERVICE EXCAVATIONS. Contractor shall locate all service laterals in advance by CCTV inspection of the host pipe. All service connections shall be exposed prior to bursting to prevent damage and facilitate and expedite service reinstatement. Excavation of service lateral pits shall allow for equal 360° expansion of the host pipe during bursting.

4.5.2.5.7.9.7. LAUNCHING AND EXIT PITS. Whenever possible, pits shall be located outside traffic areas and generally near manholes to permit gradual entry of the bursting equipment and the new pipe into the host pipe. Length of launch pit should generally be 2.5 times the depth of the existing pipe. Steep entries may put excessive strain and friction on the new pipe. Exit pits must be sized to permit removal of pipe bursting equipment and to allow connection of the new pipe to the manhole. The pipe shall be installed and bedded to correct line and grade within the launching and exit pits.

4.5.2.5.7.9.8. BURST LENGTH. Most proposed sewer burst lengths are from manhole to manhole. Longer bursts are possible, but are heavily dependent on the diameter of the host pipe, amount of upsizing, depth, and soil conditions. The use of lubricants is usually recommended as a means of facilitating longer burst lengths.

4.5.2.5.7.9.9. MANHOLE PREPARATION. Entry and exit holes in the manhole must be enlarged to permit the pipe bursting equipment and the new pipe to pass through and remain on grade. This may also necessitate modifications to manhole table and trough.

4.5.2.5.7.9.10. GENERAL GUIDELINES FOR USE OF LUBRICANTS.

A. When new pipe is equal to, or greater than, two times the diameter of the host pipe.

B. When burst length exceeds 300 feet.

C. When diameter of new pipe exceeds 12 inches.

D. When host pipe is below the water table.

E. When free-flowing soil conditions exist.

F. When recommended by the manufacturer of the pipe bursting equipment.

4.5.2.5.7.9.11. PROJECT CONSIDERATIONS. The following variables shall be considered when determining the method and length of run of a pipe bursting project:

A. Consider the depth of the existing pipe and the replacement pipe. The minimum depth of cover over the host pipe shall be two to three times the diameter of the new pipe, or four feet, whichever is greater. With written approval of the Utilities Engineer, the minimum depth of cover may be reduced.

B. Consider material and present condition of the host pipe. A CCTV inspection must be made.

C. Consider the diameter and profile of the host pipe.

D. Consider condition and type of surrounding soil.

E. Consider topography of the ground surface above the host pipe.

F. Consider adjoining utilities and services. Minimum horizontal clearance from other utilities shall be five feet or greater, and minimum vertical clearance shall be two feet or greater. With written approval of the Utilities Engineer, these minimum clearances may be reduced. All interfering and crossing utilities must be carefully located and may need to be exposed prior to pipe bursting.

G. Consider service excavations.

H. Consider material and wall thickness of the new pipe.

4.5.2.5.7.10. RECONNECTION OF SERVICES. After a suitable pipe relaxation period, as approved by the Utilities Engineer, the Contractor shall reconnect all services to the newly installed main. The newly installed pipe shall be allowed the manufacturer's recommended period of time for cooling and relaxation due to tensile stressing prior to reconnection of service lines. Service lines shall be reconnected to the new pipe by using connectors approved by the pipe manufacturer and the Utilities Engineer, and in conformance with the specified installation procedures. Service connections shall be cast or ductile iron with stainless steel strap and elastomeric gasket, or electro fusion. Submittals for connectors will be reviewed and approved by the Utilities Engineer. Connections to the existing service line shall utilize non-shear couplings.

4.5.2.5.7.11. RESTORATION.

4.5.2.5.7.11.1. RESTORATION OF MANHOLES. The Contractor shall restore all manholes and associated surface areas to their original condition or as required by CBU and specified in the description of work. Prior to restoring manholes, the installed pipe shall be allowed the manufacturer's recommended amount of time, but not less than four (4) hours, for cooling and relaxation due to tensile stressing, prior to sealing the annulus or backfilling the insertion pit. Sufficient excess of pipe, but not less than two (2) to four (4) inches, shall be allowed to protrude into the manhole to provide for occurrence. Restraint of pipe ends within the manhole shall be achieved by means of Central Plastics Electro Fusion coupling, or approved equal. The electro fusion couplings shall be slipped over the protruding pipe ends to rest against the manhole wall and fused in place. Installation of electro fusion couplings shall be done in accordance with the manufacturer's recommended procedures. The annular space shall then be sealed with OCTOCRETE non-shrink waterproof mortar (IPA Systems, Inc.).

Restoration of tables and troughs shall be as follows: Unless otherwise instructed in the Special Conditions, Contractor shall renovate trough and table so that the invert channel has a semi-circular bottom and vertical sides extending upwards to the pipe crown. The table shall be smooth and slope towards the channel not less than one inch (1″) per foot. For restorations up to three inches (3″) thick,

Contractor shall use a grout mix exceeding 500 psi compressive strength at 28 days. For restorations greater than three inches thick, concrete brick and non-shrink mortar shall be used. Finished surface of both table and trough shall receive two coats of DRYCON (IPA Systems, Inc.).

4.5.2.5.7.11.2. RESTORATION OF PITS. Contractor shall restore all lateral pits, launching pits, and other areas disturbed by construction, to their original conditions or as specified in the Special Conditions. Prior to backfilling lateral and launching pits, the Contractor shall ensure that #11 or #12 crushed stone bedding is shovel-sliced beneath the new pipe to provide support and prevent sagging after backfill and compaction. #11 or #12 crushed stone backfill shall extend minimum 12 inches above the pipe crown.

4.5.2.5.7.12. CCTV INSPECTION. The Contractor shall perform post-installation closed circuit color television inspection of the newly installed pipe. A video tape of this inspection including audio description and printed stationing of all defects and service laterals shall be made by the Contractor. All such inspections shall be made by personnel trained to locate and identify deficiencies, breaks, obstacles, and service laterals. Said post-construction video tapes shall be presented to CBU for review prior to final payment. Should any portion of the inspection tapes be of inadequate quality or coverage as determined by the Utilities Engineer, the Contractor shall re-inspect the unacceptable portion at no additional expense to CBU. All submitted video tapes shall remain the property of CBU. The Contractor may, at the discretion of CBU, retain a second copy.

4.5.2.5.8. MEASUREMENT AND PAYMENT. Application for partial payment shall normally be submitted no more than once a month for work accomplished up to the cut-off date supplied by CBU. Payment shall be based on a Schedule of Payments supplied in advance of construction by the Contractor and approved by the Utilities Engineer, and shall be made in accordance with the terms and conditions of the contract. The price per foot of installed pipe as specified shall include full compensation for furnishing all labor, materials, tools, equipment, and back-up equipment necessary for carrying out the pipe bursting activity and all associated tasks as described in the Special Conditions and Contract Documents. Pipe shall be measured along the longitudinal axis between the manhole centerlines. Replacement and modification of manhole troughs and tables shall be considered part of the pipe bursting process, and no additional compensation will be made for this work unless otherwise addressed in the Special Conditions and Contract Documents.

Alternately, payment may be based on a payments schedule developed by the Design Engineer and the Utilities Engineer and included in the Request for Quote or Invitation to Bid.

4.5.3. **INSTALLATION OF WATER MAINS.** This section describes the specific methods and general practices to be used in installation of water mains. Water mains shall be laid in accordance with the latest revision of AWWA C600 or AWWA M23.

4.5.3.1. GENERAL.

4.5.3.1.1. MAINTAINING EXISTING WATER SERVICES Contractor shall provide for non-interruption of existing services at all times during the project, except when service line transfers are being performed. With the bid proposal, Contractor shall enumerate in detail the measures proposed for providing non-interruption of existing services.

4.5.3.1.2. INSPECTION BEFORE INSTALLATION. All pipe and fittings shall be carefully examined for cracks and other defects while suspended above the trench immediately before installation. Spigot ends shall be examined with particular care, as they are most vulnerable to damage from handling. All gaskets shall be examined for tears or irregularities.

4.5.3.1.3. CLEANING OF PIPE AND FITTINGS. Both the spigot and the inside of the bell shall be wiped clean and dry and free from dirt, oil and grease before lubricant is applied and the pipe is laid.

4.5.3.1.4. BELL ENDS TO FACE DIRECTION OF LAYING. Pipe shall be laid with bell-ends facing in direction of laying unless otherwise directed by the Engineer. Where pipe is laid on a grade of 10 percent (10%) or greater, the laying shall start at the bottom and shall proceed upward with the bell-ends of the

pipe facing upgrade. Anchors shall be required for stabilization on all pipe having a slope greater than 20%.

4.5.3.1.5. PERMISSIBLE DEFLECTION AT JOINTS. Wherever it is necessary to deflect pipe from a straight line, either in the vertical or horizontal plane, to avoid obstructions or to plumb stems, or where long-radius curves are permitted, the amount of deflection allowed shall not exceed that allowed by the pipe manufacturer.

4.5.3.1.6. CROSSING EXISTING UTILITIES. Where the new main crosses existing utilities, the main shall be laid *under* the existing pipe where necessary to obtain minimum cover (48").

4.5.3.1.7. DEAD-END WATER MAINS. The Contractor shall install a gate valve and plug at the end of any dead-end line which might obviously be extended. The dead-end main shall be restrained as per the plans.

4.5.3.2. INSTALLATION OF PIPE. This subsection specifies installation methods for pipes made of ductile iron and polyvinyl chloride.

4.5.3.2.1. INSTALLATION OF DUCTILE IRON PIPE (DIP). All installation of DIP shall conform to the latest revision of AWWA C600. DIP shall always be handled with straps (no chains) to avoid damage to external coating. Any such damage must be repaired by Contractor at no additional cost to Owner.

4.5.3.2.1.1. PUSH-ON JOINTS. Push-on joints shall be assembled in accordance with the instructions and recommendations of the manufacturer. Each spigot end shall be suitably beveled to facilitate assembly. Approved pipe lubricant shall be applied to joint surfaces immediately before seating. Lubricant shall be stored in closed containers to maintain cleanliness.

4.5.3.2.1.2. MECHANICAL JOINTS. Mechanical joints shall be assembled in accordance with the manufacturer's recommendations. If effective sealing is not achieved, the joint shall be disassembled, thoroughly cleaned, and reassembled. Overtightening of bolts to compensate for poor installation practice will not be permitted.

4.5.3.2.1.3. BEDDING AND BACKFILL FOR DIP. Bedding to be as stated in 4.5.1.4.1. Backfill to be as stated in 4.5.1.6. and following.

4.5.3.2.1.4. FIELD-CUTTING DIP. See 4.5.2.1.3.1.

4.5.3.2.1.5. DIFFERENT METALLIC PIPE MATERIALS. Wherever it is necessary to join DIP with pipe of a dissimilar metal, the Contractor shall provide a method of insulating against the passage of electric current to be approved by the Engineer.

4.5.3.2.2. INSTALLATION OF POLYVINYL CHLORIDE (PVC) PIPE. PVC pipe is NOT an approved material for construction of 6” and larger water mains within the City of Bloomington water jurisdiction. In special instances the Utilities Engineer may give written permission to utilize PVC pipe in construction of water mains which are to remain private. This will be done on a case by case basis. In no case shall pressure class be less than 200 psi.

PVC pressure pipe may be used in construction of 2-inch or 4-inch water mains to be taken over and maintained by City of Bloomington Utilities. In such case the 2-inch pipe shall be SDR-21 (PR200), and the 4-inch pipe may be either SDR-21 (PR200) or C900 (DR-14).

2-inch PVC water mains shall be connected to existing water mains by mounting a 2-inch tapping saddle on the main to be tapped and connecting a 2-inch corporation stop to the saddle. After the tap has been made, Contractor shall install an iron pipe to flared copper fitting (corporation nut) on the corporation stop. Contractor shall then thread one end of a 6-inch long, 2-inch diameter brass nipple into the corporation nut. Contractor shall connect a 2-inch brass-bodied, full-port IPS ball valve with a Teflon coated ball to the other end of the nipple, then connect another 6-inch long, 2-inch diameter brass nipple into the other side of the ball valve. Contractor shall then connect a PVC or brass compression coupling to the other

end of the nipple. The compression coupling shall connect to the new 2-inch SDR-21 PVC pipe. Pipe restraint shall employ Uni-Flange Series 1300, 1350, or 1390 pipe restraints. All service lines connecting to 2-inch PVC mains shall be 1-inch type K copper and shall connect by means of a self-tapping unit with compression connector outlet. Self-tapping unit shall be **FastTap**, as manufactured by **Continental Water Products**, or pre-approved equal.

4-inch PVC water mains shall be connected to existing water mains by means of a 4-inch tapping saddle and a 4-inch tapping valve in accordance with 4.4.4.2.4. and 4.4.4.2.5. When the tap has been made, Contractor shall connect the new 4-inch SDR-21 PR200 or C900 DR-14 PVC pipe to the valve by using an EBAA Series 3100 or Uni-Flange Series 1300 pipe restraint. A transition gasket is required when connecting SDR-21 pipe to the valve. Additional mechanical restraint on the new main shall be in accordance with 4.5.3.4.1.2.

Both 2-inch and 4-inch valves shall be equipped with road type valve boxes. Meter setup for 2-inch mains shall be in conformance with City of Bloomington Utilities Standard Detail Number 15.

A #10 insulated solid copper wire shall be wrapped around all PVC pipe so that one revolution is made at least every pipe joint. Splices are to be made with an approved connector, and are to be suitably protected against corrosion. Where the main is laid off the road, the wire is to be brought to the surface approximately every 500 feet to an air valve vault or a valve box with a sign post. Where the main is laid in the street, the wire is to be brought into a valve box approximately every 500 feet. Sign post shall be furnished by the Utilities Department; valve boxes to be furnished by Contractor.

4.5.3.2.2.1. FIELD-CUTTING PVC PIPE. See 4.5.2.1.1.1.1.

4.5.3.2.2.2. BEDDING AND BACKFILL FOR PVC PIPE.

4.5.3.2.2.2.1. PVC PIPE 6" AND LARGER IN DIAMETER. Bedding to be as stated in 4.5.1.4.1. Backfill to be as stated in 4.5.1.6. and following.

4.5.3.2.2.2.2. PVC PIPE LESS THAN 6" IN DIAMETER. Pipe shall be bedded on 4" of fill sand, and fill sand shall extend 4" above the top of pipe.

4.5.3.2.3. INSTALLATION OF PRESTRESSED CONCRETE CYLINDER PIPE. Installation shall be as directed in AWWA Manual M9, **Concrete Pressure Pipe**.

4.5.3.3. INSTALLATION OF FIRE LINES. Owner or Contractor must contact the City of Bloomington Utilities Engineering Dept. and complete an Application Request for Fire Line Connection and receive CBU approval before start of construction. All fire lines shall remain private, from the valve on the City main to the extremity. Pipe material shall be ductile iron pressure class 350 unless special permission for use of other pipe material is given by the Utilities Engineer. All fire lines shall be equipped with a check valve and a bypass detector meter. The check valve shall be AMES Silver Bullet, Model 3000ss or Watts 774DCDA OSY double detector check (DDC) assembly and shall be installed in accordance with manufacturer's requirements. Check valve, bypass detector meter (registering in gallons), and piping shall all be sized by a fire system designer according to fire flow demands and area system pressure and flow. This assembly shall be located as close to the City main as possible, and shall be installed in a vault in accordance with CBU Standard Detail Number 7a, 7b, or 7c. The exact location and size of vault must be approved in advance by CBU. The fire department having jurisdiction must approve location of post indicator valve and fire dept. connection. The vault shall be provided with a latching hinged aluminum door, locking when specified, size, brand, and model to be approved by the Utilities Engineer minimum size will be 3' by 3'. Door to be centered over the meter or meters to facilitate reading. All fire lines to the building shall terminate with a permanent indicating control valve such as a resilient seated OS&Y gate valve within 36" of entering the building, other variations must be approved by Utilities Engineer. This valve shall be used to hydrostatic pressure test against and will remain as part of the system. No connection shall be made to any fire line until successful completion of both pressure and purification tests. For testing procedure (see 4.5.8.2.3.).

If a fire line is tapped for domestic service, the tap must be made before the (DDC) assembly and a valve must be provided between the tap and the assembly to permit work on the (DDC) assembly without interruption of service. The domestic meter may be placed in the same vault with the (DDC) assembly if the vault has been sized appropriately. If a fire line is not tapped for domestic service, and the (DDC) assembly is not within 50' of the City main, an additional single check valve in a manhole may be required adjacent to the City main.

It is the responsibility of the fire system designer to verify all existing conditions of flow, pressure, pipe size, and number and configuration of fittings, contact CBU Engineering for all design requirements. This shall be clearly stated in design calculations to be submitted with the Application for Service. Any changes in the field must be approved in writing by the system designer. Contractor shall pressure test all fire lines at 200 psi for two hours, see 4.5.8.2.3. All fire lines shall be sterilized (see 4.5.3.5.1.), and purification tested (see 4.5.8.2.2.) by the Contractor. All tests on fire lines shall be monitored and supervised by a CBU inspector.

4.5.3.4. **INSTALLATION OF FITTINGS AND APPURTENANCES.**

4.5.3.4.1. THRUST RESTRAINT. The configuration of a water main results in unbalanced hydrostatic or hydrodynamic forces which, unless restrained, can result in joint separation. All fittings such as valves, tees, bends, plugs, etc. must be adequately restrained against thrust forces as follows.

4.5.3.4.1.1. RESTRAINED JOINTS. A restrained joint is a special mechanical joint or device that is designed to mechanically couple a calculated number of adjacent joints of pipe together. The entire restrained unit of pipe is then able to transfer thrust forces to the surrounding backfill by friction. Use of joint restraints will be required for all water projects within the CBU water jurisdictional area. Design of a joint restraint system consists of determining the length of pipe that must be restrained on each side of the focus of a thrust force. This will be determined by pipe size, design pressure, depth of cover, and the characteristics of the soil surrounding the pipe. The engineer who designs a water main shall be responsible for incorporating a comprehensive thrust restraint design into the plans. The design engineer shall make clear to the contractor in the plan and profile drawings the exact lineal footage of pipe and fittings that shall be restrained, and which joint restraints are suitable for each application. The thrust restraint design will be reviewed as a part of standard plan review by CBU Engineering, but the design engineer shall be ultimately responsible for the accuracy and effectiveness of his thrust restraint design for each project.

The following joint restraints are acceptable for use as listed so long as they are made in the U.S.A. and have a **minimum pressure rating of 200 psi**:

**For Restraining Mechanical Joint Fittings:**
EBAA Series 1100 for DIP
EBAA Series 2000PV for C900 PVC, and SDR 21 PR200 PVC
Uni-Flange Series 1300-C for C900 PVC
Uni-Flange Series 1300-S for SDR-21 PR200 PVC
Uni-Flange Series 1400 for DIP
Romac Industries Roma Grip for DIP and PVC

**For Restraining Push-on C900 PVC Fittings:**
EBAA Series 2500
Uni-Flange Series 1360-C

**For Restraining Push-on C900 PVC Pipe Joints:**
EBAA Series 1600 (4″ through 12″)
EBAA Series 2800 (14″ through 30″)
Uni-Flange Series 1350-C
Uni-Flange Series 1390-C

**For Restraining Push-on SDR-21 PR200 PVC Pipe Joints:**
EBAA Series 6600 (3″ through 12″)
Uni-Flange Series 1350-S
Uni-Flange Series 1390-S

**For Restraining Push-on DIP Joints:**
EBAA Series 1100 HD
EBAA Series 1700
Uni-Flange Series 1450
Lock Joint Pipe or gaskets (when specified)

**For Restraining Mechanical DIP Joints:**
EBAA Megalug
EBAA Series 1100
Uni-Flange Series 1400
Romac Industries Roma Grip

4.5.3.4.1.2. THRUST BLOCKS. The use of thrust blocks as a means of thrust restraint on water mains will be permitted only on a case-by-case basis with written permission of the Utilities Engineer. The only exception shall be the concrete thrust block placed on the opposite side of an existing water main when making a hot-tap. Instead of thrust blocks, joint restraints shall be used. When thrust blocks are allowed the fittings must be wrapped in plastic before the concrete is placed.

4.5.3.4.2. INSTALLATION OF HYDRANTS. Connection of fire hydrant arm to new main shall be made by using a restrained mechanical joint tee in the main line. The line valve on the hydrant arm shall be connected directly to this tee by use of an anchor coupling (see Standard detail #8). The hydrant shall be connected to the other end of the fire arm by an anchor coupling or ductile iron pipe with joint restraint glands or see 4.5.3.4.1.1. for equivalent restraints. For connection to existing mains, a tapping sleeve and valve may be substituted for the tee/anchor coupling/gate valve assembly. Any deviation from these two methods requires prior approval from the Utilities Engineer and shall be indicated on the plan drawings. For accepted manufacturers and color of the hydrants see 4.4.4.4.

Contractor shall provide a generous envelope of #5 stone around the drain ports to assure barrel drainage of hydrants. Envelope is to be minimum two feet (2') in diameter and six inches (6") above drain ports.

Contractor shall set ground line mark on hydrant two inches (2") above finished grade.

4.5.3.4.3. INSTALLATION OF FLUSH HYDRANTS. All flush hydrants, whether installed in grassy areas or pavement, shall be **Gil model Aquarius 101 GHS, 2-inch Slim Line Hidden Hydrant**, or **Kupferle Model TF500 Flush Hydrant** (www.hydrants.com). All flush hydrants shall be installed in a traffic-rated six-inch valve box with lid. A 2-inch, brass-bodied, double O-ring, full-port valve with a Teflon coated ball shall be installed immediately before either type of flush hydrant. Valve shall be equipped with road type valve box.

4.5.3.4.4. INSTALLATION OF VALVES. All valves shall be properly restrained, as detailed in the Standard Drawings.

Butterfly and gate valves shall be set vertically. Flanged valves shall be securely bolted utilizing red rubber gaskets and high-strength rustproof steel bolts and nuts. In all areas where system static pressure is greater than 90 psi, cloth insert gaskets as manufactured by BILTRITE or approved equivalent shall be used.
All gate valves shall be buried and have road boxes unless otherwise specified. For valve box installation see 4.5.3.4.8.

All butterfly valves shall be installed in a precast concrete manhole with a minimum interior diameter of 5 feet. The dimensions of larger valves may require 6-foot I.D. manholes. Manhole base shall be minimum

6 inch poured in place Class A concrete having a minimum compressive strength of 4,000 psi, over minimum 4 inches of either #11 or #12 stone bedding. Base shall be provided with a minimum 1' by 1' drain. Manhole casting shall be East Jordan 1020 series with a self-sealing, non-rocking lid imprinted with the word "WATER".

4.5.3.4.5. INSTALLATION OF LINE VALVES. When installing a line valve adjacent to a junction with a new main, a mechanical joint tee shall be installed in that new main, and the line valve shall be connected directly to that tee by an anchor coupling. For connection to existing mains, a tapping sleeve and valve may be substituted for the tee/anchor coupling/gate valve assembly. Any deviation from these two methods requires prior approval from the Utilities Engineer and shall be indicated on the plan drawings.

4.5.3.4.6. INSTALLATION OF TAPPING VALVES. Tapping valves shall be installed by the Contractor and the tap made by City Utilities. Tapping valve connections to existing mains shall be made at the locations shown on the plans. Exact locations of existing mains shall be verified in the field by the Contractor. Contractor shall position tapping valve at best location as determined in the field by the Engineer or his agent, and no extra payment will be made for any relocation.

Tapping valve and sleeve installation shall be made in accordance with the detail in the Standard Drawings. Valves shall be securely supported in vertical position during the tapping operation. Valve shall be checked for leaks before backfilling. Bedding and backfill material shall be thoroughly tamped around and under valve after installation. Thrust restraint shall be provided at all appropriate locations.

4.5.3.4.7. INSTALLATION OF AIR RELEASE VALVES. Air release valves and appurtenances shall be installed in a manhole as shown in Standard Detail #3. A saddle with a tapping corporation shall be installed on the top of the main at the high point formed by sloping two adjacent joints to a summit.

4.5.3.4.8. INSTALLATION OF VALVE BOXES. Valve boxes shall be set squarely over the wrench nut and in a vertical position with a centering device such as a Boxlok or an approved equivalent. Tops shall be flush with the finished grade and readjusted as necessary to conform to the surface until final settlement or paving is complete.

All valve boxes which are *not* in pavement shall be centered in a six inch thick concrete pad, measuring 18 inches on each side.

4.5.3.4.9. INSTALLATION OF VALVE MARKERS. (When required) At each sectionalizing valve, a marker pipe shall be set at the right-of-way line laterally adjacent to the valve. If this is not possible due to some conflict, the marker shall be set where directed by the Utilities Engineer. A marker will also be required at each air release valve vault. Setting of markers shall be as detailed in the Standard Drawings. No extra payment will be made for markers or their setting; such cost must be included in the price of the valves.

4.5.3.5. FILLING, STERILIZATION, AND FLUSHING OF WATER MAINS. Contractor shall fill, sterilize, and flush all new mains, leads, and appurtenances in accordance with the latest revisions of AWWA C600, C601, and C651.

4.5.3.5.1. FILLING, STERILIZATION, AND FLUSHING PROCEDURE. As each length of pipe is laid, Contractor shall affix an appropriate number of 5 gram Hypochlorite tablets inside the top of the pipe barrel using Permatex #1 adhesive or approved equivalent. Silicone sealant is not an acceptable adhesive. There shall be no adhesive on the tablet except a thin layer on the broad side attached to the surface of the pipe. Pipe must be installed with tablets at the top. The following table indicates the number of 5 gram Hypochlorite tablets required per pipe section as indicated in the latest revision of AWWA C651.

| | | Length of Pipe Section in Feet (m) | | | | |
|---|---|---|---|---|---|---|
| | | 13 (4.0) or less | 18 (5.5) | 20 (6.1) | 30 (9.1) | 40 (12.2) |
| Pipe Diameter in inches | (in mm) | Number of 5-g Hypochlorite Tablets | | | | |
| 4 | (100) | 1 | 1 | 1 | 1 | 1 |
| 6 | (150) | 1 | 1 | 1 | 2 | 2 |
| 8 | (200) | 1 | 2 | 2 | 3 | 4 |
| 10 | (250) | 2 | 3 | 3 | 4 | 5 |
| 12 | (300) | 3 | 4 | 4 | 6 | 7 |
| 16 | (400) | 4 | 6 | 7 | 10 | 13 |

Also, one such tablet shall be placed in each hydrant, hydrant branch, and other appurtenance. Sterilization for pipe larger than 16 inch shall be addressed in each individual project.

The main shall then be slowly filled with water from the City distribution system at a velocity no greater than one foot per second. Air shall be expelled from the main as it is filled, by use of air valves or hydrants at the high point of the main. Where such vents are not available, Contractor shall install a corporation cock at the high point to assure air removal. When tablets have dissolved, a chlorine residual of not less than 10ppm shall remain in the water after the 48-hour disinfection period has passed.

Valves shall be manipulated so that the strong chlorine solution in the line being treated is not allowed to flow back into the City distribution system. Following chlorination, all treated water shall be flushed from the new main at its extremity, for a period of time determined by the Utilities Engineer, so that the water quality matches that in the City distribution system. All valves shall then be closed until bacterial testing is performed. If for some reason additional flushing is required, City of Bloomington Utilities Department reserves the right to charge Contractor for the water at the standard rate.

If this water is flushed into the sanitary sewer system, the Utilities Department reserves the right to charge the Contractor a sewage treatment fee for that volume of water. Flushing into the sanitary sewer system is never to be performed during wet-weather conditions.

Before the new main is put into use, the City must test the water from the main for bacterial contamination, and monitor the Contractor's pressure and leakage test. All testing is to be conducted within two weeks after pipe is filled. No connections to the main will be permitted until all testing is complete.

4.5.3.6. SERVICE CONNECTIONS.

4.5.3.6.1. Contractor will not be permitted to tap existing water mains; this must be done by City of Bloomington Utilities.

4.5.3.6.2. The Contractor is authorized to make service taps on his newly-installed mains which have passed both pressure and purification tests. However, the Contractor must consult the Utilities Inspector, for approval of all methods and materials used in tapping the main and running services. The tapping machine and bit shall be clean and disinfected and the proper lubricant used such as Mueller cutting grease 681927. Fittings must be Ford, McDonald, or Mueller or an approved equivalent, made in the USA.

Also, the Contractor must consult the Utilities Engineer regarding required diameter of service lines in consideration of system pressure and flow in project area. Service lines shall be 1", 1-1/2", or 2" type K copper in conformance with ASTM B88. Only flared fittings will be permitted.

The Contractor shall install service lines in the following manner:

For 1" service lines, a (CC) threaded tap shall be made on the main at a 45 degree to 90 degree angle from vertical, and a single O-ring, full-port, Teflon-coated, brass corporation stop installed; saddle taps on ductile iron pipe will not be permitted for 1" services.

For service lines 1-1/2" or 2" in diameter, the tap shall be made by installing an approved non-corrosive saddle with stainless steel mounting bolts and a corporation stop.

A type K copper service line of appropriate diameter shall be run to the property line. At this point a double O-ring, full-port, Teflon-coated, ball valve curb stop shall be installed. The curb stop shall be fitted with a female iron thread for later attachment to yoke. This opening shall be fitted with a temporary plastic plug, or covered with duct tape. Contractor shall place a two-by-four or four-by-four extending vertically from the end of the service line in the trench to a point at least two feet above finished grade to facilitate future location. This marker shall be painted blue to indicate "water".

The service line shall be bedded on 4" of fill sand, and shall receive 4" of sand cover over the pipe. The remainder of backfill shall be as required in 4.5.1.6. and following. Street cut repairs shall be in accordance with 4.5.6. and following the requirements of the agency governing the roadway.

4.5.3.7. INSTALLATION OF DOMESTIC METER, YOKE, AND PIT. Developer shall deliver fixture count and a plat indicating addresses to the office of the Utilities Engineer prior to application for meter sets. Domestic meters, service yokes, and pits shall be purchased from City of Bloomington Utilities. Contact the Transmission and Distribution Department, Utilities Service Center, 600 E. Miller Dr., at least 48 hours in advance to make arrangements for installation.

The developer/builder shall establish and mark finished grade at the proposed pit location for meters 2” and smaller. The developer/builder will be responsible for all excavation, setting the pit to finish grade, and backfill. The Transmission and Distribution crew will make connection to water stub and install a yoke for the meter at 18” to 24” below marked finish grade. The developer/builder will be responsible for connection to building plumbing, installation of meter pit and backfilled, prior to installation of meter. Top of yoke shall be set minimum 18" and maximum 24" below top of pit at finish grade. Where yokes are not set within this range of depth, City of Bloomington Utilities personnel may refuse to set meters until yokes are properly adjusted.

Dual service setups shall be served by 1-1/2" or 2” diameter type K copper service line as designated unless special permission is given by the Utilities Engineer.

Prices for meters, meter sets, taps, etc. will be evaluated and established periodically. For current prices contact New Services.

4.5.3.8. INSTALLATION OF LARGE METER, AND VAULT. The installation of water meters larger than 2” will be done by the developer/builder or their contractor. The meter assembly must be obtained from the City of Bloomington Utilities. Contact City of Bloomington Utilities, Utilities Service Center, 600 E. Miller Dr., at least 6 weeks in advance to make arrangements. The larger meter must be placed in a vault built to City of Bloomington Utilities standard details or a design accepted by the Utilities Engineer. When you are not using flange type pipe in the vault a restrained flange adapter such as MegaFlange series 2100 or accepted equivalent should be used to make connection from cut pipe to flange type fittings. Set screw type flange adapters are not acceptable.

4.5.4. **INSTALLATION OF STORM SEWERS.** This section describes the specific methods and general practices to be used in installation of storm sewers.

4.5.4.1. LINE AND GRADE. Bench marks shall be set in strategic locations of the project by either the Design Engineer or the Utilities Engineering Department before start of construction. The Contractor shall be responsible for furnishing additional bench marks or reestablishing obscured bench marks, and shall furnish and set all line and grade stakes. The laser method of installation shall be used to set the grade of all sewer pipe. Any other method must first be approved in writing by the Utilities Engineer. Contractor shall constantly check alignment and grade of pipe.

4.5.4.2. LAYING OF PIPE. The point of commencement for laying storm sewer pipe shall be the lowest point in the proposed storm sewer line. Pipe shall be laid with the bell end of bell and spigot pipe, or the receiving groove end of tongue and groove pipe, pointing upgrade. Each pipe shall be placed on firm, evenly raked bedding material. All pipe shall be homed as per manufacturer's instructions. Any other procedure shall require written permission of the Utilities Engineer.

4.5.4.2.1. LAYING OF PIPE IN COLD WEATHER. Contractor shall discontinue pipe installation whenever there is danger of the quality of work being impaired because of cold weather. Contractor shall be responsible for heating pipe and jointing material to prevent freezing of joints. No pipe shall be laid on frozen ground, and no pipe shall be laid when the air temperature is less than 32° F unless proper precautions, as per the manufacturer's recommendations, are followed.

4.5.4.2.2. UNSTABLE SOIL CONDITIONS: When unstable soil conditions are encountered and the trench bottom is not firm, all soft and compressible material shall be excavated and replaced with #1 or #2 crushed stone before placement of the bedding material. As an alternative, with written permission of the Utilities Engineer, an acceptable geo-fabric may be used beneath the bedding material to stabilize the trench bottom.

4.5.4.2.3. DEWATERING AND CONTROL OF SURFACE WATER. Whenever groundwater is encountered, Contractor shall make every practical effort to secure a dry trench bottom before laying pipe. Contractor shall provide, install, and operate sufficient trenches, sumps, pumps, hoses, piping, well points, etc. to depress and maintain the groundwater level below the base of the excavation. If Contractor is unable to remove the standing water in the trench, Contractor shall over-excavate the proposed grade of the sewer bedding and place not less than three (3) inches of #2 or #3 crushed stone in the over-excavated area at no additional cost to the Owner.

Contractor shall keep the site free of surface water at all times and shall install drainage ditches, dikes, pumps, and perform other work necessary to divert or remove rainfall and other accumulation of surface water from excavations. The diversion and removal of surface and/or groundwater shall be performed in a manner which will prevent the accumulation of water within the construction area.

***Under no circumstances shall surface water and/or groundwater be discharged to, disposed of or allowed to flow into an active sanitary sewer system.***

4.5.4.3. BEDDING FOR STORM SEWERS. Contractor shall provide bedding material as noted below and as indicated on the plans. The cost for bedding material shall be included in the bid price for the main, and is not a separate pay item. Bedding shall conform to ASTM D 2321 and shall be #11 or #12 crushed stone.

4.5.4.3.1. BENEATH PIPE. All pipe shall be bedded on minimum 4″ of #11 or #12 crushed stone when in soil and 6″ when the pipe is laid in rock, or 1/6 pipe O.D. up to 8-inch maximum thickness, whichever is greater. The stone shall be spread and the surface graded to provide a uniform and continuous support beneath the pipe at all points between pipe joints. Bedding material shall be removed for bells so the entire length of the pipe rests evenly on the bedding.

4.5.4.3.2. BENEATH STRUCTURES. Bedding shall be minimum four inches (4″) of either #11 or #12 crushed stone in soil and six inches (6″) in rock. All over-excavation shall be filled with either #11 or #12 crushed stone or flowable backfill, as directed by the Utilities Engineer, to achieve elevations indicated on the plan drawings.

4.5.4.4. BACKFILL FOR STORM SEWERS. Contractor shall provide backfill material as noted below and as indicated on the plans. The cost for backfill material shall be included in the bid price for the main, and is not a separate pay item. Backfill materials shall be placed and compacted in uniform lifts and shall have a moisture content sufficient to assure that maximum density will be obtained with compaction.

4.5.4.4.1. BACKFILL OVER PIPES. Backfill over pipes shall be divided into two categories: Primary Backfill and Secondary Backfill.

4.5.4.4.1.1. PRIMARY BACKFILL. Primary backfill shall be #11 or #12 crushed stone. The stone shall be shovel-sliced beneath the haunches of the pipe. The primary backfill shall extend to a point 12″ above the crown of the pipe.

4.5.4.4.1.2. SECONDARY BACKFILL. Secondary backfill shall be as stated in Sections 4.5.1.6.1. through 4.5.1.6.3.

4.5.4.4.2. BACKFILL AROUND STRUCTURES. Backfill around structures shall be as stated in Sections 4.5.1.6.1. through 4.5.1.6.4.

4.5.4.5. INSTALLATION OF STORM STRUCTURES. Structures shall be placed and aligned to provide vertical sides within a tolerance not to exceed two inches (2″) up to 16 feet in depth, plus 1/8 inch per foot over 16 feet in depth. Tolerance shall be checked with a plumb line. The completed structure shall be rigid, true to dimensions, and soil tight.

4.5.4.5.1. INSTALLATION OF CAST-IN-PLACE STORM STRUCTURES. Cast-in-place storm structures shall be constructed at the locations and elevations shown on the plan drawings, and in accordance with the shop drawings, as noted in Section 4.4.5.5.1.1.

4.5.4.5.2. INSTALLATION OF PRECAST STORM SEWER MANHOLES. Precast storm sewer manholes shall be installed in accordance with Sections 4.5.2.1.7.1. through 4.5.2.1.7.4.

4.5.4.5.3. INSTALLATION OF PRECAST CONCRETE INLETS AND CATCH BASINS. Precast concrete inlets and catch basins shall be constructed at the locations and elevations shown on the plan drawings, and in accordance with Section 4.4.5.5.1.3.

4.5.4.6. SEPARATION BETWEEN UTILITIES. Horizontal and vertical separation between utilities shall be as stated in Sections 4.5.1.7. through 4.5.1.9.

4.5.4.7. ABANDONING OF SEWERS. Storm sewers which are to be abandoned shall be filled with a thin concrete mix or flowable backfill and closed either by means of a cap or plug of the same material as the pipe, or bulkheaded with a masonry brick and non-shrink waterproof mortar wall.

Unless otherwise specified, all abandoned manholes, catch basins, and inlets shall be removed to a depth of three feet (3′) below the proposed or established grade or existing street grade, whichever is lower, and filled with compacted granular material or flowable backfill.

4.5.4.8. DEFLECTION TESTING. All storm sewer mains constructed of flexible pipe (PVC, HDPE, and SRP) and having manholes at each end of the pipe run, shall be deflection tested. Deflection testing shall not be required for pipe runs having an inlet or catch basin on one end.

Pipe sizes 36-inch and smaller diameter shall be mandrelled with a rigid device. For any vertical or horizontal deflection test, the pipe failure shall be defined as a five percent (5%) or greater deflection of the internal pipe diameter when testing with a rigid ball or mandrel of no less than 95% of the base inside diameter of the pipe being tested. The Contractor shall be required to perform a deflection test of all flexible pipe after the final backfill has been in place for at least thirty (30) days. The following pipe types are considered *non-flexible* and do *not* require deflection testing: vitrified clay pipe, ductile or cast iron pipe, concrete pipe, asbestos-cement pipe. Test methods and equipment shall be subject to the Engineer's approval. The test must be conducted in the presence of the Engineer or his representative, and the test results must be reviewed and certified by the Engineer or his representative prior to final acceptance of the sewer. The test is a go/no-go procedure in which the mandrel must be hand-pulled without any type of mechanical assistance. Any pipe which is found to have failed by deflection within the warranty period shall be replaced by the Contractor at no additional cost to the Owner.

Pipe sizes larger than 36-inch shall be deflection tested based on a method agreeable to both the Utilities Engineer and the Contractor.

4.5.5. **CONCRETE MIXING AND PLACING.** Mixing and placing of concrete shall conform to the latest revision of ACI 614. Ready-mixed concrete shall conform to the latest revision of ASTM C94, and shall be as specified in the Special Conditions.

4.5.5.1. COLD WEATHER CONCRETE: Whenever the atmospheric temperature is 35° F or below, or whenever the atmospheric temperature may fall below 35° F within the curing period, concrete may not be placed without the written permission of the Utilities Engineer. Contractor must have the approval of the Utilities Engineer for proposed procedures to maintain temperature of freshly-poured concrete at a minimum temperature of 50° F while maintaining adequate moisture in the air throughout the curing period. Cold weather concrete shall be placed at the risk of the Contractor and shall be removed and replaced at his expense if it becomes frozen or otherwise damaged due to low temperature.

4.5.6. **STREET CUT REPAIRS.**

4.5.6.1. GENERAL. Contractor shall be responsible for obtaining a street cut permit from the proper jurisdictional agency.

4.5.6.2. PAVING. The Contractor shall be aware that several different specifications exist depending on the agency having jurisdiction over the street cut repair. It is the Contractor's responsibility to determine the agency having jurisdiction in the project area, to obtain the proper permits, and comply with the requirements of that agency.

4.5.7. **MISCELLANEOUS RESTORATION AND CLEAN-UP.** After completion of the Work, the Contractor shall restore all fences, shrubs, lawns, culverts, walks, driveways, etc., disturbed by his operations. All excess materials, construction debris, trash, etc., resulting from the Work shall be removed from the site and disposed of by the Contractor.

Any existing sewers, culverts, field tiles, or other conduits encountered in the trenching operation shall be left intact. If cut or removed during construction, they shall be replaced to the satisfaction of the Owner and Engineer without extra payment.

After backfilling trenches in areas outside pavement and shoulders, the excess excavated material shall be windrowed along the top of trenches until sufficient settlement has occurred. After sufficient settlement, trenches shall be graded to match surrounding topography and all excess materials disposed of by the Contractor. All areas shall be restored to original or better condition. No extra payment will be made for replacement of shrubs, fences, mailboxes, driveways, sidewalks, or curbs, or any other items not provided for as a pay item in the proposal.

4.5.8. **TESTING OF SEWER AND WATER MAINS.**

4.5.8.1. TESTING OF SEWER MAINS. Each section of sewer shall meet the requirements of the following tests. All defects exposed by these tests and by inspection shall be repaired by the Contractor to the satisfaction of the Engineer at no cost to the Owner. The Contractor shall be required to provide all materials, equipment, and labor required in the performance of these tests including, but not limited to, water, pumps, cleaning of pipes, etc.

4.5.8.1.1. TESTING OF GRAVITY SEWERS. New gravity sewers shall be required to pass either an air pressure test, or an exfiltration test. The air pressure test shall be the standard, and the exfiltration test may only be conducted with written approval of the Utilities Engineer. All new manholes must pass a vacuum test.

Methods used during all tests shall be subject to the approval of the Engineer. The completed sewer shall be tested for leakage, and inspected for damaged materials and improper installation including straightness of line *before any services are connected to the sewer*.

No additional payment will be made for the performance of these tests.

4.5.8.1.1.1. AIR PRESSURE TEST: The Contractor shall conduct a test on PVC pipe using low-pressure air in place of exfiltration testing. Air pressure test shall conform to ASTM F-1417-92. The section of sewer to be tested shall be isolated with pneumatic plugs that have a sealing length greater than the diameter of the pipe and are capable of resisting test pressure without external bracing or blocking. The sewer shall be pressurized to 4 psi gauge greater than the average back pressure of any ground water over the pipe. This pressure shall be maintained until the temperature of the pipe and the air have equalized, but not less than two minutes. After the temperature has stabilized, the air supply shall be disconnected and the pressure allowed to drop. The time in minutes required for the pressure to drop from 3.5 psi to 2.5 psi shall not be less than as calculated using the following chart:

MINIMUM SPECIFIED TIME REQUIRED FOR A 1.0 PSIG PRESSURE DROP AND MULTIPLIER FOR CALCULATING TIME BY LENGTH OF PIPE (L)

| Pipe Diameter (inches) | Minimum Time (min:sec) | Maximum Length for Minimum Time (feet) | Time for Longer Length (seconds) |
|---|---|---|---|
| 4 | 3:46 | 597 | 0.380 L |
| 6 | 5:40 | 398 | 0.854 L |
| 8 | 7:34 | 298 | 1.520 L |
| 10 | 9:26 | 239 | 2.374 L |
| 12 | 11:20 | 199 | 3.418 L |
| 15 | 14:10 | 159 | 5.342 L |
| 18 | 17:00 | 133 | 7.692 L |
| 21 | 19:50 | 114 | 10.470 L |
| 24 | 22:40 | 99 | 13.674 L |
| 27 | 25:30 | 88 | 17.306 L |
| 30 | 28:20 | 80 | 21.366 L |
| 33 | 31:10 | 72 | 25.852 L |
| 36 | 34:00 | 66 | 30.768 L |

Column 1 is the diameter of the pipe to be tested. Column 2 is the minimum time permitted for any length of pipe up to and including the length listed in column 3. If the length of the pipe to be tested is greater than the length listed in column 3, multiply the length of the pipe to be tested by the number in column 4. The result is the test time in seconds.

4.5.8.1.1.2. EXFILTRATION TEST. With the written approval of the Utilities Engineer an exfiltration test can be performed by closing all other openings in the upper manhole and plugging the line where it enters the lower manhole of the section to be tested, filling the line and the upper manhole to the top with water and measuring the water required to keep the manhole full.

The total exfiltration shall not exceed 100 gallons per inch of nominal diameter per mile of pipe per day for each section tested. For determining maximum allowable leakage, manholes shall be considered as sections of pipe of equal inside diameter. The exfiltration tests shall be maintained on each section for at least one hour, and as much longer as the Engineer considers necessary to locate all leaks. If the leakage in any section exceeds the allowable maximum, it shall be retested after the leaks are repaired.

4.5.8.1.1.3. VACUUM TEST. All sanitary manholes must be vacuum tested. The vacuum tester shall be as manufactured by P. A. Glazier, Inc. or approved equivalent.

4.5.8.1.1.3.1. VACUUM TEST FOR MANHOLES. Manholes shall be air tested in accordance with ASTM C1244-93, Standard Test Method for Concrete Sewer Manholes by the Negative Air Pressure (Vacuum) Test. Testing shall be done after complete assembly of manhole, including the manhole frame and, when pertinent, any outside drop connections. Testing prior to backfilling is highly recommended to facilitate

corrective measures in case of test failure. Contractor shall plug all pipe openings, taking care to securely brace both the plugs and the pipes. The test head shall be placed at the top of the manhole in accordance with the manufacturer's recommendations. A vacuum of 10 inches of mercury shall be drawn on the manhole, the valve on the vacuum line of the test head closed, and the vacuum pump shut off. The time shall be measured for the vacuum to drop to 9 inches of mercury. The manhole shall pass if the the vacuum reading drops from 10 inches of mercury to 9 inches of mercury in ***one and one-half (1.5) minutes or more. If the inspector finds a noticible leak, he may immediately declare the test to have failed.*** If the manhole fails the initial test, necessary repairs shall be made by an approved method. The manhole shall then be retested until a satisfactory test is obtained.

4.5.8.1.1.3.2. VACUUM TEST FOR SEWER PIPES. Vacuum testing of gravity sewer pipe is no longer an acceptable alternative in the CBU jurisdictional area.

4.5.8.1.1.4. DEFLECTION TEST. For any vertical or horizontal deflection test, the pipe failure shall be defined as a five percent (5%) or greater deflection of the internal pipe diameter when testing with a rigid ball or mandrel of no less than 95% of the base inside diameter of the pipe being tested. The Contractor shall be required to perform a deflection test of all flexible pipe after the final backfill has been in place for at least thirty (30) days. The following pipe types are considered *non-flexible* and do *not* require deflection testing: vitrified clay pipe, ductile or cast iron pipe, concrete pipe, asbestos-cement pipe. Test methods and equipment shall be subject to the Engineer's approval. The test must be conducted in the presence of the Engineer or his representative, and the test results must be reviewed and certified by the Engineer or his representative prior to final acceptance of the sewer. The test is a go/no-go procedure in which the mandrel must be hand-pulled without any type of mechanical assistance. Any pipe which is found to have failed by deflection within the warranty period shall be replaced by the Contractor at no additional cost to the Owner.

4.5.8.1.1.5. SMOKE TEST. The Owner shall reserve the right to supplement sewer tests with a pressure smoke test when it is considered necessary or desirable by the Owner or Engineer.

4.5.8.1.1.6. TELEVISION INSPECTION. Before final acceptance, all new gravity sewers shall be televised by the City of Bloomington Utilities Department.

The first televising run shall be conducted after all other testing and jet-cleaning is complete. Contractor must give at least 72 hours prior notice (not including weekends or holidays) to the Utilities Department when scheduling televising.

A second televising run shall be conducted 11 months after the date of final acceptance. Both televising runs shall determine wye locations, defective joints, and deformed or cracked pipe or fittings. Both runs will be done by City Utilities without charge to the Contractor. Any additional runs that are considered necessary to reinspect defective pipes, wyes, joints, etc., shall be charged to the Contractor at a rate to be determined by the City of Bloomington Utilities Department.

4.5.8.1.2. TESTING OF FORCE MAINS. All force mains shall be pressure and leak tested in accordance with one (1) of the following methods. If an AWWA standard is not available for the particular installation, the installation and test procedure recommended by the manufacturer shall be followed. Contractor shall supply pump with suitable pressure gauge and acceptable means of connecting to main. Utilities Inspector will monitor all tests.

4.5.8.1.2.1. AWWA STANDARD C600, LATEST UPDATE: Installation of Ductile Iron Force Mains and Their Appurtenances (see 4.5.8.2.1.1.).
4.5.8.1.2.2. AWWA Standard C605, LATEST UPDATE: Underground Installation of Polyvinyl Chloride (PVC) Pressure Pipe and Fittings for Force Main.

With a Utilities Inspector present, a combined hydrostatic pressure and leakage test shall be performed. The line shall be properly filled with water, flushed, and purged of air by means of an air valve or blow-off. The specified test pressure shall be applied by means of an approved pumping assembly. Test pressure shall be 150% of the working pressure (pump shut-off head) at the point of test, but not less than 125% of

the normal working pressure at the highest elevation of the line. Duration of the test shall be two (2) hours. Leakage shall be defined as the quantity of water that must be supplied into the pipe section being tested to maintain a pressure within 5 psi of the specified leakage test pressure after the pipe has been filled with water and the air has been expelled.

**The following table indicates allowable leakage per 50 joints of PVC pipe in gallons per hour:**

| **Average Test Pressure, psi** | **Nominal Pipe diameter, inches** | | | | | | | | | | |
|---|---|---|---|---|---|---|---|---|---|---|---|
| | **4** | **6** | **8** | **10** | **12** | **14** | **16** | **18** | **20** | **24** | **30** |
| **300** | 0.47 | 0.70 | 0.94 | 1.17 | 1.40 | 1.64 | 1.87 | 2.11 | 2.34 | 2.81 | 3.51 |
| **275** | 0.45 | 0.67 | 0.90 | 1.12 | 1.38 | 1.57 | 1.79 | 2.02 | 2.24 | 2.69 | 3.36 |
| **250** | 0.43 | 0.64 | 0.85 | 1.07 | 1.28 | 1.50 | 1.71 | 1.92 | 2.14 | 2.56 | 3.21 |
| **225** | 0.41 | 0.61 | 0.81 | 1.01 | 1.22 | 1.42 | 1.62 | 1.82 | 2.03 | 2.43 | 3.04 |
| **200** | 0.38 | 0.57 | 0.76 | 0.96 | 1.15 | 1.34 | 1.53 | 1.72 | 1.91 | 2.29 | 2.87 |
| **175** | 0.36 | 0.54 | 0.72 | 0.89 | 1.07 | 1.25 | 1.43 | 1.61 | 1.79 | 2.15 | 2.68 |
| **150** | 0.33 | 0.50 | 0.66 | 0.83 | 0.99 | 1.16 | 1.32 | 1.49 | 1.66 | 1.99 | 2.48 |
| **125** | 0.30 | 0.45 | 0.60 | 0.76 | 0.91 | 1.06 | 1.21 | 1.36 | 1.51 | 1.81 | 2.27 |
| **100** | 0.27 | 0.41 | 0.54 | 0.68 | 0.81 | 0.95 | 1.08 | 1.22 | 1.35 | 1.62 | 2.03 |
| **75** | 0.23 | 0.35 | 0.47 | 0.59 | 0.70 | 0.82 | 0.94 | 1.05 | 1.17 | 1.40 | 1.76 |
| **50** | 0.19 | 0.29 | 0.38 | 0.48 | 0.57 | 0.67 | 0.76 | 0.86 | 0.96 | 1.15 | 1.43 |

4.5.8.1.3. TESTING OF WET WELLS. Contractor shall perform leakage tests on wet wells under supervision of the Utilities Inspector. This shall be an exfiltration test performed in the following manner:

The test shall be made prior to placing any backfill material. If the water table has been allowed to rise above the bottom of the wet well, it shall be lowered for the duration of the test. Any points of visible inflow/infiltration shall be plugged by use of OCTOPLUG (IPA Systems, Inc.) (www.ipasystems.com). All pipes and other openings into the wet well shall be suitably plugged by means of pneumatic plugs that have a sealing length greater than the diameter of the pipe and are capable of resisting test pressure without external bracing or blocking.

The wet well shall then be filled to the top with water. If the excavation has not been backfilled and there is no visible or measurable indication of leakage after one hour, the wet well shall be considered to be satisfactorily water-tight.

If the test as described above is not satisfactory, or if the wet well excavation has been backfilled, the following test shall be performed. A period of time up to 24 hours shall be permitted to allow for absorption. At The end of this period, the wet well shall be refilled to the top and the measuring period of at least 8 hours begun. At the end of this test period, the amount of loss can be calculated by measuring and calculating the volume lost, or the wet well can be filled to the top while measuring the required volume of water to do so. This amount shall be extrapolated to a 24-hour rate.

Calculation of allowable loss in 24 hours for wet wells shall be similar to that of pipe and manholes, which shall not exceed 100 gallons per inch of nominal diameter per mile of pipe per day.

**To calculate allowable loss in gallons for circular wet wells:** Multiply wet well diameter in inches times 100 gallons times depth in fractional miles (depth in feet divided by 5280).
**To calculate allowable loss in gallons for rectangular wet wells:** Multiply wet well perimeter in inches (2 × L plus 2 × W) times 100 gallons / $\pi$ times depth in fractional miles (depth in feet divided by 5280).

If the wet well does not meet allowable leakage rate, repairs by approved methods may be made as directed by the Utilities Engineer to bring the leakage within the allowable rate. No adjustment to the leakage allowance will be made for unknown causes, such as leaking plugs, absorption, evaporation, etc.; it will be assumed that all loss of water during the test is a result of leaks through the joints or

through the walls. Furthermore, the Contractor shall take any steps necessary to assure the Utilities Inspector that the water table remains below the bottom of the wet well throughout the test.

4.5.8.2. TESTING OF WATER MAINS.

4.5.8.2.1. PRESSURE AND LEAKAGE TEST. The Contractor shall perform a combination pressure and leakage test on all new mains after they have been filled with water as specified in 4.5.3.5.1. This test shall not be performed until the entire main has been backfilled.

4.5.8.2.1.1. PROCEDURE. The test procedure shall be as herein specified and in accordance with the latest revision of AWWA C600.

After the new main has been filled with water and all air evacuated, each valved section, as directed by the Engineer, shall be subjected to water pressure normal to the area and inspected for evidence of leakage. The main shall then be subjected to a combination hydrostatic and leakage test. The test pressure shall be developed by a pump with suitable pressure gauge furnished and connected to the main by the Contractor. Test pressure shall not be less than 125% of the standard working pressure at the highest elevation on the main, and at least 150% of the standard working pressure at the point of testing or 200 psi which ever is greater. Duration of the test shall be two (2) hours. Leakage shall be defined as the quantity of water that must be supplied into the pipe section being tested to maintain a pressure within 5 psi of the specified leakage test pressure after the pipe has been filled with water and the air has been expelled.

Leakage shall not exceed a rate of twelve gallons per inch of pipe diameter, per mile of pipe, per twenty-four hours at a pressure of 200 psi.

**The following table indicates allowable leakage per 1,000 feet of DIP in gallons per hour:**

| **Average Test Pressure, psi** | **Nominal Pipe diameter, inches** | | | | | | | | | | |
|---|---|---|---|---|---|---|---|---|---|---|---|
| | **4** | **6** | **8** | **10** | **12** | **14** | **16** | **18** | **20** | **24** | **30** |
| **300** | 0.52 | 0.78 | 1.04 | 1.30 | 1.56 | 1.82 | 2.08 | 2.34 | 2.60 | 3.12 | 3.90 |
| **275** | 0.50 | 0.75 | 1.00 | 1.24 | 1.49 | 1.74 | 1.99 | 2.24 | 2.49 | 2.99 | 3.73 |
| **250** | 0.47 | 0.71 | 0.95 | 1.19 | 1.42 | 1.66 | 1.90 | 2.14 | 2.37 | 2.85 | 3.56 |
| **225** | 0.45 | 0.68 | 0.90 | 1.13 | 1.35 | 1.58 | 1.80 | 2.03 | 2.25 | 2.70 | 3.38 |
| **200** | 0.43 | 0.64 | 0.85 | 1.06 | 1.28 | 1.48 | 1.70 | 1.91 | 2.12 | 2.55 | 3.19 |
| **175** | 0.40 | 0.59 | 0.80 | 0.99 | 1.19 | 1.39 | 1.59 | 1.79 | 1.98 | 2.38 | 2.98 |
| **150** | 0.37 | 0.55 | 0.74 | 0.92 | 1.10 | 1.29 | 1.47 | 1.66 | 1.84 | 2.21 | 2.76 |
| **125** | 0.34 | 0.50 | 0.67 | 0.84 | 1.01 | 1.18 | 1.34 | 1.51 | 1.68 | 2.01 | 2.52 |
| **100** | 0.30 | 0.45 | 0.60 | 0.75 | 0.90 | 1.05 | 1.20 | 1.35 | 1.50 | 1.80 | 2.25 |

If the leakage from a test section is greater than permitted under this specification, the Contractor shall locate and repair the defective joints, pipes, or appurtenances. The pressure test shall then be repeated until leakage does not exceed the permissible amount.

4.5.8.2.2. PURIFICATION TEST. Purification testing shall be in accordance with the latest edition of AWWA C651. After a new main or fire line has passed the pressure/leakage test, and after it has been flushed as detailed in 4.5.3.5.1., but before the new main is connected to the distribution system, two consecutive sets of acceptable samples, taken at least 24 hours apart, shall be collected from the new main or fire line by the Utilities Inspector. At least one set of samples shall be collected from every 1,200 feet (366 m) of the new water main, plus one set from the end of the line and at least one set from each branch.

If initial disinfection fails to produce satisfactory bacteriological samples, the main may be reflushed in accordance with 4.5.3.5.1. and new samples taken. If new samples show the presence of coliform organisms, the main shall be rechlorinated.

4.5.8.2.2.1. RECHLORINATION PROCEDURES. Water mains shall be rechlorinated in accordance with the latest edition of AWWA C651 utilizing procedures approved in advance by the Utilities Engineer. 16 hours after flushing is completed, new samples will be taken for testing in accordance with 4.5.8.2.2.

4.5.8.2.3. FIRE LINE MAIN TESTING. The fire line main from the connection valve on the water supply main to the control valve inside the building shall be pressure tested in accordance with NFPA 13 chapter 10 and as follows. The pipe shall be sterilized, filled, and flushed (see 4.5.3.5.1.), and then the double detector check (DDC) assembly is installed in the pipe. The DDC assembly and pipe must be hydrostatic pressure tested together at 200 psi for 2 hours the same as all water mains (see 4.5.8.2.1.1.). If the system is taken apart to add components it must be retested. After the fire line main passes the pressure test it shall follow the same purification test as all water mains (see section 4.5.8.2.2.).

# INDEX

## —A—

abandonment of gravity sewers, 42
R.C.P., 15
adjusting rings, precast concrete, 27
air pressure test, 69
air release valves, 22
air release valves, water, 22
air/vacuum valve, 18, 19, 20, 42, 44
  air release valve, 20
  combination valve, 20
Air/vacuum valves, 44
anchor coupling, 63
Anchors, 38, *See pipe anchors*
anchors for pipe, 36
anchors for pipes, slopes greater than 20%, 58
Application for Service, 61
Article 327 IAC, 9
asphalt, 31

## —B—

backfill, 11, 13, 31, 35, 36, 37, 38, 39, 40, 59, 60, 63, 65, 67, 70, 71
  around structures, 37
  general, 36
  in unimproved areas, 37
  under highway shoulders, 37
R.C.P., 40
backfill beneath pavements, surfacing, and driveways, 36
backfill, settlement of, 35
bacterial testing, 64
ball valve, 21, 65
barrels, 17, 41
barrels, manhole, 17
barricades, 11, 12
barricades, signs, and lights, 11
base, 16, 17, 41, 42, 45, 62
bedding, 35, 36, 39, 40, 59, 63
  beneath pipe, 36
  beneath structures, 36
  general, 36
R.C.P., 40
bedding and backfill, installation
  DIP, 39
  PE pipe, 39
  VCP, 39
bedding in rock, 36
bedding in soil, 36
bell and spigot joints, 19, 21
bentonite, use of, 35
BILTRITE. *See* cloth insert gaskets
blast monitoring, 34
Blasting, 32
blasting consultant, 32
blasting plan, 33
blasting, postblast survey, 34
blasting, preblast survey, 34
Bolts and nuts for DIP mechanical joints, 20
boot, 16, 17, 41
boots, manhole, 17
boring or tunneling, 35
boring, abandonment, 35
boring, obstruction, 35
boring, rock payment for, 36
boulders, 31
box culverts, precast, 26
box inlets, precast concrete, 27
Boxlok, 20, 22, 63
bracing, 35
butterfly valves, 22, 62
butyl rubber material, installation of castings, 18, 41
bypass detector meter, 60

## —C—

C900, 14
C900 (DR-14), 21, 59
C900 (DR-18), 18, 43
cap, 16, 40
caps or plugs, 40
carrier pipe, 36
Cascade Style CSST transition clamp coupling, 15
casing, 35, 36
casing pipe, jacking of, 35
casing pipe, lubricant for jacking, 35
casing spacers, 36
casting required for clean-out, 40
castings, adjustment of elevation, 42
castings, manhole, 17, 18, 41
CBU Standard Detail #2, 16, 41
cell classification PVC, 18" - 27", 14
cell classification PVC, 4" - 15", 13
air pressure test, 69
check valve, additional c.v. required, 61
check valve, fire lines, 60
check valves, 20
check valves (sewer laterals), 40
chlorination, 64
chlorine, 64
chlorine residual, 64
CIPP, 46
CIPP cool-down, 48
CIPP installation, 47
CIPP temperature monitoring, 48
CIPP test samples, 48
CIPP visual inspection, 48
CIPP, chemical resistance requirements, 46
CIPP, curing, 47
CIPP, hydraulic capacity, 46
CIPP, minimum structural standards, 46
CIPP, pre-lining inspections, 46
CIPP, reinstatement of services, 48
CIPP, water for process, 48
class A concrete, 13
class B concrete, 13
cleaning of sewers, 42
clean-out, 40
clean-out casting required, 40
clean-up and restoration, 68

clean-up operations, 10
clearing, 12, 30, 40
cloth insert gaskets, 62
cold weather concrete, 68
cold weather installation of manholes, 42
combination valve, 42
combination valves, 20, 44
compaction of backfill, 36
completion dates, 10
Compression or solder joints for water services, 21
concrete, 10, 13, 15, 17, 22, 31, 35, 36, 41, 42, 45, 62, 63, 67, 68, 70
  class A, 13
  class B, 13
  forms, 13
  general, 13
  reinforcing steel, 13
concrete, installation
  cold weather concrete, 68
  general, 68
cones, 17, 42
cones, manhole, 17
construction schedule, 10
Pipe Bursting, 50
copper wire, 18, 19, 21, 44
copper, type K, 21
corp stop, 21
corporation stop, 65
corporation stops, 21
couplings, 15
cover, 12, 14, 17, 18, 31, 35, 42, 59, 65
covers, manhole, 17
crossing of utilities, 37
curb stop, 21, 65
Cured In Place Pipe (CIPP), 46

## —D—

D.I.P., 20, 21
daily clean-up, 11
dead-end water mains, 59
deflection of water mains, 59
deflection test, 70
deflection, allowable, 67, 70
detector check assembly, 60
detention ponds and dams, 26
dewatering, 30, 35
DFW non-shear coupling, 15
dikes, 12
DIP, 14, 18, 20, 39, 43, 59
  bedding and backfill, 39
  field-cutting DIP, 39
  installation of DIP, 39
DIP fittings, 21
DIP joints, 20
DIP, protective linings for sewer application, 14
disinfection, 64, 72
disinfection period, 64
disposal of excavated materials, 35
diversion of surface water, 35
domestic meter, 60
domestic service, 60
double detector check (DDC) assembly, 60
drainage of stormwater, 12
drainage provisions (temporary), 12
driveways, 11
DRYCON, 17, 42, 45
dual service setups, water, 65
ductile iron pipe, 18, 20
Dumpster Pads
  drains for dumpster pads, 40
Dura-Seal gasket, 17, 41
dust control, 12

## —E—

earth excavation, general, 31
easements, 9
East Jordan, 17, 22, 63
embedment material, 36
erosion control, 12
erosion control plan, 12
ETI ULTRA BLUE, 18, 43
excavated material, 12
excavated materials
  classification, 31
  disposal of, 35
  earth excavation, 31
  rock excavation, 31
  rock excavation for pipe, 31
  rock excavation for structures, 32
  rock excavation pay limits, 34
  stockpiling of, 35
excavation, general, 31
excavation, unauthorized, 35
exfiltration, 68, 69, 71
exfiltration test, 69
exfiltration, allowable amount, 69
existing services, non-interruption of, 58
EZ-STIK, 17, 41, 42, 45

## —F—

fall through manholes, allowable, 41
FARBERTITE, 17, 42, 45
**FastTap**, 21
Fernco Waterstop, 36
fill sand, 60, 65
filling and flushing of water mains, 11
fire hydrant, 62
fire hydrants, 23
  installation, 62
fire line, 60
fire line main testing, 73
fire lines
  bypass detector meter, 60
  check valve, 60
  installation, 60
  sterilization and pressure testing, 61
  taps on fire lines, 60
fire lines remain private, 60
fire lines to be DIP, 60
fire lines, check valve, 60
fire lines, pit door, 60
FirstLiner USA, Inc., 46
fittings, 13, 14, 18, 19, 20, 21, 36, 39, 43, 44, 58, 61, 64, 70
fittings and appurtenances, installation
  air release valves, 63

fire hydrants, 62
flush hydrants, 62
line valves, 63
tapping valves, 63
valve boxes, 63
valves, general, 62
fittings, water, 21
flagmen, 11
flanged joints, 18, 20
flattops, 17, 42
flattops, manhole, 17
flexible pipe, 67, 70
flotation, 35
flotation of pipe, 35
flush hydrants, 23
installation, 62
flushing, 11, 64, 73
force main, 18, 42, 43, 44
force main valves, 18
force mains, 43
air/vacuum valves, 44
design and installation, 42
DIP, 43
fittings, 44
high point, 43
joint restraint, 43
locator wire for PVC pipe, 44
PVC pipe, 43
force mains - PVC pipe, 43
force mains, testing of, 70
forms, 13
frame, 17, 42, 69
frames, manhole, 17
frozen materials, 31

## —G—

gasket, 14, 16, 17, 36, 38, 40, 41
gaskets, 18, 19, 20, 21, 36, 58, 62
R.C.P., 15
gaskets, manhole, 17
gate valve, 59, 62, 63
gate valves, 20, 22, 62
geo-fabric, 31
gravity sewers
C900 PVC pipe, 14
DIP, 14
home marks, PVC pipe, 14
materials, 13
PE pipe, 14
PE pipe joints, 14
pipe materials, 13
prevention of inflow during construction, 38
PVC fittings, 13, 14
PVC pipe, 13
PVC pipe joints, 14
VCP, 14
VCP joints, 14
gravity sewers, installation
DIP, 39
DIP, field-cutting, 39
general, 38
PE pipe, 39
PVC pipe, 39
service connections, 40
VCP, 39
gravity sewers, minimum pipe slopes, 38
ground line mark on hydrant, 62
grout, 17, 36, 41, 42, 45
grubbing, 30

## —H—

hand digging zone, 10
HARCO
fittings, 14
hazardous substances, 30
HDPE bedding, 44
HDPE fittings, 19
HDPE mechanical joint adapters, 19, 44
HDPE pipe, 24
butt fusion, 19, 44
heat fusion, 19, 44
storm sewers, 24
HDPE pipe joining, 19, 44
HDPE primary backfill, 44
HDPE secondary backfill, 44
HDPE, installation, 44
hydrant arm, 62
hydrants, disinfection of, 64
Hydraulic calculations, 23
hypochlorite tablets, 63

## —I—

IDF Curves, 23
inlets and catch basins, precast, 27
Insituform of North America, Inc., 46
inspector, 31, 61
R.C.P., 39
installation of bedding and backfill
DIP, 59
PE pipe, 39
VCP, 39
installation of storm sewers, 65
installation of valve markers, 63
installation of water mains, 59
invert height above manhole base, 41
inverted siphons, 45
IOSHA, 31, 35
IPA Systems, 17, 42, 45
IPANEX, 17, 42, 45

## —J—

jacking of casing pipe, 35
joint restraints, 43, 61
R.C.P., 15

## —K—

Kennedy Guardian, 23
kickers, 62
KOR-N-SEAL, 17, 41

## —L—

laser, 38

lateral marker, 40
laterals, 40
laterals in a common trench, 40
laying of pipe, 36
lids, 17
Lids, manhole, 17
lift holes, 17, 42, 45
R.C.P., 15
lights, flashing, 11
limits of work, 9
line valve, 62, 63
lining, DIP for water, 20
locator wire, 18, 19, 44, 60
locator wire and signs, 21
low-pressure air test, 69
PVC sewer pipe, 69
lubricant, 35, 38, 58, 59

## —M—

maintenance of traffic, 11
manhole, 16, 17, 18, 22, 40, 41, 42, 62, 69
manhole frames and covers, 17
manhole gasket for pipe, 41
manhole size determined by pipe size, angles, 16
manholes, 16, 41
  adjustment of casting elevation, 42
  assembly of base, barrel, and cone, 41
  barrels, 17
  bases, 16
  boots and gaskets, 41
  castings, 17
  cold weather installation, 42
  cones and flattops, 17
  gaskets and boots, 17
  general, 15
  installation, 41
  installation of castings, 41
  installation of steps, 41
  installation of table and trough, 41
  joints between manhole sections, 41
  manhole bases, 16
  maximum elevation difference between inlet pipes, 16
  maximum fall through manholes, 16
  minimum diameters, 16
  outside drop, 16
  sealants, 17, 42
  steps, 18
manholes with multiple inlets, 41
manholes, outside drop, 41
marker, 23, 40, 63, 65
marker for sewer stub-out, 40
marker, water service stub-out, 65
mechanical joints, 18, 20, 59
mechanical restraints, 43, 61
mega-lug gland, 62
meter, 21, 60, 65
meter pit, 65
meter pit, yoke depth, 65
Mission 56 Series ARC coupling, 15
mortar, 14, 16, 36, 41, 42
Mueller Centurion, 23

## —N—

no-cut streets, 9
non-flexible pipe, 67, 70
non-shear pipe couplings, 15
notification of discrepancies on plans, 10
notification of start of construction, 10
notification procedures, 10
notify all utilities, 10
notify Holey Moley, 10
notify I.U.P.P.S., 10

## —O—

obstruction in boring, 35
OCTOCRETE, 17, 42, 45
open-cut road crossings, 11
order of precedence, 9
Order of Precedence, 9
outside drop, 16, 41, *See* manholes
outside drop manholes, 41

## —P—

paving, 63
PC 350, 18
PCCP, 21, 60
PE, 14
PE pipe, 39
PE pipe, push plate for seating, 39
permits, 9
pipe anchors, 36
Pipe Bursting
  burst lengths, 56
  bypassing the flow, 55
  CCTV inspection, 58
  host pipe depth, 55
  host pipe size, 55
  launching and exit pits, 56
  lubricants, 57
  manhole preparation, 56
  measurement and payment, 58
  methods and systems, 53
  quality assurance, 51
  reconnection of services, 57
  reference standards, 50
  relaxation period, 57
  replacement pipe materials, 54
  restoration of manhole tables and troughs, 57
  restoration of manholes, 57
  restoration of pits, 58
  service excavations, 56
  size and wall thickness of new pipe, 56
  submittals, 51
  suitable host pipe materials, 55
  surrounding soil types, 56
pipe couplings, 15
pipe laser, 38
pipe lubricant, 38, 59
pipe placement, 36
pipe, flotation of, 35
fire lines, 60
plug, 16, 17, 38, 40, 42, 45, 65, 70
plug valves, 20

plugs, 70, 71
plugs or caps, 40
pollution control, 12
polyethylene, 13, 36, 38
polyethylene encasement, 19, 21
polyvinyl chloride, 13, 38, 59
ponding, 12
postblast survey, 34
poured-in-place wet wells, 45
power, use of, 11
preblast survey, 34
precast box culverts, 26
pre-cast wet well structures, 44
pre-cast wet wells, 45
preparation of the site, 30
pressure and leakage test, 64, 72
pressure gauge, 72
pressure sewers, 42
  air/vacuum valves, 20
  check valves, 20
  DIP, 18
  DIP fittings, 19
  DIP joints, 18
  gate valves, 20
  HDPE fittings, 19
  HDPE pipe, 19
  joining of HDPE pipe, 19, 44
  locator wire and signs for C900 pipe, 18
  locator wire and signs for HDPE pipe, 19, 44
  material, 18
  pipe and fittings, 18
  plug valves, 20
  pump station specifications, 20
  PVC pipe, 18
  valves, general, 19
Prestressed Concrete Cylinder Pipe, 21
prevention of inflow during construction, 38
private property, 9
project requirements, 10
PRO-STIK, 18, 27, 41
protection of public and private property, 12
protection of site, 31
protection of underground facilities, 10
**Protecto 401**, 14, 18
pump stations, 20, 44
pumping, 30, 42
purification test, water mains, 72
push plate for seating large diameter PE pipe, 39
push-on joints, 18, 20
PVC, 13, 14, 18, 21, 36, 39, 43, 59, 60
PVC pipe, 21, 59
PVC pipe, primary backfill, 36, 39
PVC pressure pipe, 59
PVC water mains, 2-inch, 59
PVC water mains, 4-inch, 60
PVC water pipe, 21

## —R—

R.C.P., 15
R.C.P., reinforcement, 15
railroad right-of-way, 9
Rainfall Intensity-Duration-Frequency Curves, 23
ready-mixed concrete, 68
rebar, 13
rechlorination of water mains, 73
rehabilitation of sanitary sewers, 46
reinforced concrete pipe, 15, 25
reinforcing steel, 13
removal of water, 35
request field-marking of all utilities, 10
restoration and clean-up, 68
restrained joint, 61
riser rings, 17
road boxes, 62
road crossings, open cut, 11
road cut permits, 9
rock, 31, 32, 34, 35, 36, 39
rock excavation for pipe, 31
rock excavation pay limits, 34
rock excavation, general, 31
rock payment for boring, 36
rocks, 31
rubble, construction, 10

## —S—

saddle, 44, 63, 65
saddles, 40
safety, 11, 31, 35, 43
safety program, 31
sanitary laterals, 40
sanitary sewers
  abandonment, 42
  cleaning, 42
scarification, 31, 35
SDR-21 (PR200), 18, 21, 43, 59
seal of lining, DIP for water, 20
sealants, manhole, 17, 42
separation between CBU mains and permanent structures, 37
separation between CBU mains and trees, 37
separation between manholes and water mains, 37
separation between utilities
  horizontal separation, 37
  if impossible to maintain minimum separation, 37
  vertical separation, 37
service connections, 40, 64
service connections, gravity sewer, 40
service connections, water
  domestic meter, yoke, and pit, 7, 65
  general, 64
service line, 21, 40, 58, 65
service lines, 21
service lines, installation of, 64
service lines, sizing of, 64
service wyes, 40
settlement of backfill, 35
sewage treatment fee, 64
sewer and water mains, general installation, 30
sewer lateral connections, 40
sewer mains, fee for second TV inspection, 70
sewer mains, general installation, 37
sewer mains, smoke test, 70
sewer mains, testing, 68
sewer mains, TV inspection, 70
sewer pipes, deflection test, 67, 70
sheeting and shoring, 35

signs, 11
silicone sealant, 63
site protection, 31
sleeve type repair coupling, 15
slope of 20% or greater, pipe anchors, 36
slopes greater than 20%, 38
smoke test, 70
solid copper wire, 60
solvent cement joints, 14, 18, 21
spacers, precast concrete, 27
Spirolite PE pipe, 39
stabilization of pipe with anchors, 36
Standard Drawings, 9, 16, 22, 62, 63
State Construction Permit, 30
state highway right-of-way, 9
steps, manhole, 18, 41
stockpiling of excavated materials, 35
stone, #5, 62
storm drainage design, 23
Storm Manholes, precast, 27
Storm Sewers, abandoning, 67
Storm Sewers, Aggregate for RCP, 25
Storm Sewers, backfill, 66
Storm Sewers, bedding, 66
Storm Sewers, castings, frames, and covers, 28
Storm Sewers, connection of pipe to structure, 30
Storm Sewers, deflection testing of flexible pipe, 67
Storm Sewers, dewatering of trench, 66
Storm Sewers, DIP, 23
Storm Sewers, DIP, coatings and linings, 23
Storm Sewers, inlet and catch basin dimensions, 29
storm sewers, installation of, 65
Storm Sewers, laying of pipe in cold weather, 66
Storm Sewers, manhole dimensions, 29
Storm Sewers, materials, 23
Storm Sewers, open channels, 26
Storm Sewers, Pipe, 23
Storm Sewers, Portland Cement for RCP, 25
storm sewers, PVC pipe, 24
Storm sewers, RCP absorption limit, 25
Storm Sewers, RCP joints, 25
Storm Sewers, reinforced concrete pipe, 25
Storm Sewers, spiral rib metal pipe (SRP), 26
Storm Sewers, steel reinforcement for RCP, 25
Storm Sewers, steps in structures, 30
Storm Structures, installation, 67
Storm Structures, rejection of precast sections, 30
street cut, 68
street cut permit, jurisdiction, 68
street cut repairs, 65
  general, 68
  paving, 68
stymied pipe, 36
surface water, diversion of, 35
surfacing, temporary, 11

## —T—

table, 16, 41, 42, 63
table, manhole, 41
tamping, 13
tapping corporation, 44, 63
tapping of existing water mains, 64
tapping of newly-installed water mains, 64
tapping saddles, 22
tapping sleeves, 22
tapping valve, 63
tapping valves, 22
tapping valves, thrust restraint, 63
tee or wye saddles, 40
tee/anchor coupling/gate valve assembly, 62
tees, 14, 43
televising, 42, 70
television inspection, 70
temporary connection, sewer replacement, 38
temporary facililities, 11
temporary surfacing, 11
Ten States Standards, 9
tensile strength PVC, 18" - 27", 14
tensile strength PVC, 4" - 15", 13
testing, 68, 71, 72
testing of sewer mains, 68
  deflection test, 70
  gravity mains, exfiltration test, 69
  gravity sewers, general, 68
  smoke test, 70
  television inspection, 70
testing of water mains
  pressure and leakage test, 72
  purification test, 72
  rechlorination procedures, 73
testing of wet wells, 71
thrust blocks, 62
thrust forces, 61
thrust restraint, 61
thrust restraint design, 43, 61
thrust restraint design, responsibility for, 61
traffic maintenance, 11
tree protection, 12
trench banks, slopes, 31
trench excavation, 31
trench maintenance, 35
trench safety, 35
trench safety system, 31, 35
trench width, minimum, 31
trough, 16, 41, 42
trough, manhole, 41
tunneling, 12, 35, 36
type "K" copper, flared fittings only, 64
type K copper, 21, 60, 64, 65

## —U—

unauthorized excavation, 35
unsafe conditions, 31
unstable soil conditions, 31, 66
unsuitable construction conditions, 10
unsuitable materials, replacement of, 35
utilities, separation between
  if impossible to maintain minimum allowable, 37
  vertical, 37
Utilities, separation between
  horizontal, 37

## —V—

vacuum test for manholes, 69
vacuum tester, 69

Vacuum testing of gravity sewer pipe, 70
vacuum testing of manholes, 69
Val-Matic, 22
valve, 19, 20, 22, 63
valve box, 18, 19, 21, 22, 23, 44, 60, 62
valve boxes, 18, 19, 21, 44, 60, 63
valve markers, 23, 63
valve vault, 18, 19, 20, 21, 22, 44, 60, 63
valves, 19, 20, 22, 40, 42, 44, 62, 63, 64
  air release valves, installation, 63
  line valves, installation, 63
  tapping valves, installation, 63
  valve boxes, installation, 63
  valve markers, installation, 63
valves, installation
  general, 62
valves, restraint of, 62
valves, water, 22
VCP, 14, 39
  installation of bedding and backfill, 39
  installation of VCP, 39
VOLCLAY WATERSTOP RX, 45

## —W—

warning lights, 11
warning signs, 11
water and sewer mains, general installation, 30
water hammer, 43
water main testing, 72
water mains
  air release valves, 22
  air valve vault, 22
  butterfly valves, 22
  DIP, 20
  DIP fittings, 21
  DIP joints, 20
  filling, sterilization and flushing, 63
  fire hydrants, 23
  flush hydrants, 23
  gate valves, 22
  materials, general, 20
  PCCP, 21
  PVC pipe, 21
  PVC, locator wire and signs, 21
  PVC, push-on joints, 18, 21
  PVC, solvent cement joints, 18, 21
  valve markers, 23
  valves, general, 22
water mains, filling, 64
water mains, flushing, 64
water mains, installation
  bell ends to face direction of laying, 58
  cleaning of pipes and fittings, 58
  crossing existing utilities, 59
  dead-end water mains, 59
  different metallic pipe materials, 59
  DIP, 59
  DIP with mechanical joints, 59
  DIP with push-on joints, 59
  DIP, bedding and backfill, 59
  fire lines, 60
  general, 58
  inspection of pipes and fittings, 58
  maintaining existing services, 58
  minimum cover, 59
  on 10% grade or greater, 58
  PCCP, 60
  permissible deflection at joints, 59
  PVC pipe, 59
  PVC pipe, bedding and backfill, 60
  PVC pipe, field-cutting, 60
  PVC, locator wire, 60
  service connections, 64
water mains, pressure and leakage test, 72
water mains, purification test, 72
water mains, purification testing, 64
water mains, rechlorination of, 73
water mains, tapping of existing, 64
water mains, tapping of newly-installed, 64
water meter, dual setups, 65
water pipes, 20
water service marker, 65
water service transfers, 58
water services, 58
  FastTap, 21, 60
  fittings, 21
  meter setup, 21, 60
  type K copper, 21, 60
water table, 71
water, removal of, 35
water, use of, 11
waterproofing, 17, 42, 45
waterproofing of wet wells, 45
wet well sealants, 45
wet well test after backfilling, 71
wet well test before backfilling, 71
wet well test, absorption time, 71
wet well test, allowable loss, 71
wet well testing, 71
wet well, only one pipe connection permitted, 44
wet well, poured-in-place, 45
wet well, pre-cast, 44
Wet wells, 44
work schedule, 10
wye, 40, 70
wyes, 13, 14, 40, 70
wyes, inclination of, 40
wyes, location of, 40

## —Y—

yoke, 21, 65

# NOTIFICATION

The Contractor will be responsible for contacting the following offices or persons on the list below at least 48 HOURS PRIOR to beginning work (including delivery of materials). Street closures require SEVEN DAYS PRIOR NOTIFICATION.

| **OFFICE or PERSON** | **PHONE** | **FAX** |
|---|---|---|
| ____Mayor's Office | 349-3406 | 349-3455 |
| ____Council Office | 349-3409 | 349-3570 |
| ____Public Works | 349-3411 | 349-3520 |
| ____City Engineer | 349-3417 | 349-3520 |
| ____City Utilities Dept.. | 339-1444 | 331-5962 |
| ____Bloomington Police Dept. | 349-4477 | 349-3353 |
| ____I.U. Police Dept. | 855-4111 | 855-1496 |
| ____Monroe County Sheriff | 349-2534 | 349-2828 |
| ____Bloomington Fire Dept. | 332-9763 | 332-9764 |
| ____Bloomington Twp. Fire Dept. | 339-1115 | 339-1120 |
| ____Perry Twp. Fire Dept. | 334-7026 | 336-1166 |
| ____Van Buren Twp. Fire Dept. | 825-9500 | 825-9700 |
| ____IU Health Bloomington Emergency Med.Transport | 353-9308 | 353-9204 |
| ____Monroe Hospital Ambulance Service | 825-0911 | 825-0766 |
| ____State Highway Dept. | 332-1411 | 332-3368 |
| ____Ellettsville Fire Dept. | 876-4819 | 876-8322 |
| ____Monroe County Highway Dept. | 349-2555 | 349-2837 |
| ____MCCSC Buses | 330-7719 | 330-7791 |
| ____I.U. President | 855-4613 | 855-9586 |
| ____I.U. Utilities | 855-5013 | 855-8207 |
| ____I.U. Engineer | 855-7030 | 855-8207 |
| ____I.U. Campus Bus | 855-8384 | 856-5859 |
| ____Bloomington Transit | 332-5688 | 332-3660 |
| ____Herald-Times | 332-4401 | 331-4383 |
| ____Indiana Daily Student | 855-0763 | 855-8009 |
| ____Cable TV | 332-9486 | 330-0107 |
| ____WTTS/WGCL | 332-3366 | 331-4570 |
| ____WBWB | 336-8000 | 336-7000 |
| ____WFIU | 855-1357 | 855-5600 |
| ____IUPPS* (utility line locations) | 811 or 1-800-382-5544 | |

* The Indiana Underground Facilities Damage Prevention Act requires all persons excavating to call Indiana Underground Plant Protection Services (IUPPS) at least two full working days before digging and request locations of all underground utilities in the work area. This is an Indiana law.

**EMERGENCY:**

**Police, Fire, and Ambulance: 911**
**Duke Energy: 1-800-521-2232**
**Vectren: 1-800-227-1376**
**AT&T: 1-800-868-9696**
**Smithville Telephone: 1-812-876-2211**
**Cable T.V. 1-812-332-9486**

## SECTIONAL VIEW
## SANITARY MANHOLE

**MANHOLE CONSTRUCTION**
Manhole shall be 4500 p.s.i. concrete reinforced with 10 x 10 – W10 x W10 welded wire fabric.
Wall and base thickness shall be a minimum of 5".

**PRECAST CONCRETE RISER RINGS**
No more than 12" of rings may be used to adjust the frame and cover to grade.

**PRECAST ECCENTRIC TOP SECTION**
Precast flat tops shall be used when the manhole is less than than 6' deep. See detail below.

**JOINT SEALING**
Joints between all manhole sections shall be sealed with an approved rubber gasket. Outside joints shall be sealed with a Trowelable Butyl Rubber.

**PRECAST MANHOLE BARREL SECTION**

**COMBINED PRECAST MANHOLE BASE and BARREL SECTION**
The base and first barrel section shall be monolithic and additionally reinforced with 4 – #4 bar els 60" long.

**CAST or CORE DRILLED OPENINGS**
All openings shall be at least 3" from the top of the base part of the precast section.

**BEDDING**
4" of #11 stone on soil or
6" of #11 stone on rock

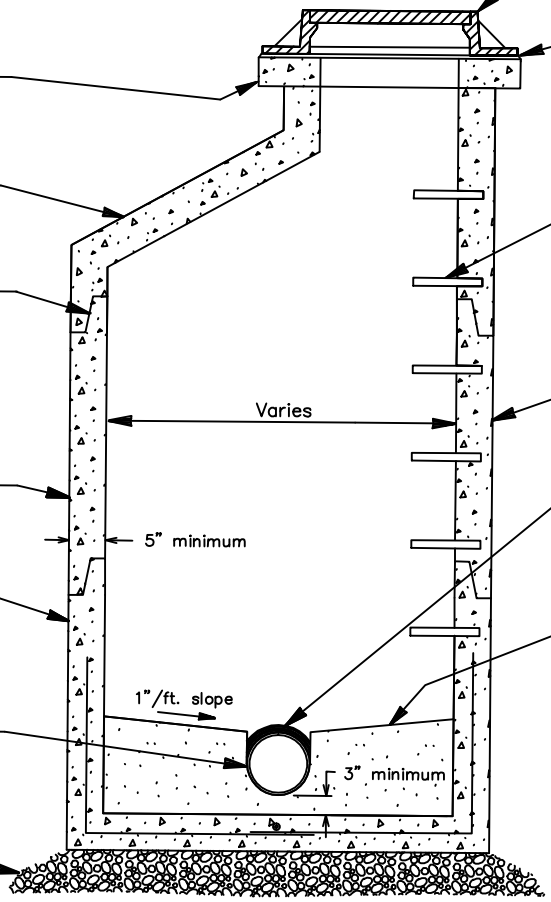


**MANHOLE FRAME AND COVER**
Frame shall be East Jordan Iron Works casting no. 1020, 1022 or an approved equivalent.
Cover shall be East Jordan Iron Works casting no. 1020A or an approved equivalent. "SANITARY SEWER" shall be cast in each cover.
All castings shall be coated.
Frame shall be set on Butyl Rubber Rope.

**MANHOLE STEPS**
Shall be constructed of Fiberglas reinforced polypropolene.
Install with nonshrink mortar or epoxy grout 12" to 16" apart and at a location allowing access to the table.

**MANHOLE SEALANT**
See 4.4.2.2.6 of CBU Specifications.

**GASKETS and BOOTS**
Pipe to manhole connections shall be flexible boot or cast in place gasket. See special detail below and 4.4.2.2.5 of CBU Specifications.

**TROUGH and TABLE**
Construct with concrete brick, and non–shrink mortar.
Troughs shall be smooth with a semicircular bottom and extend upward to the height of the pipe crown. The table shall be smooth and slope toward the trough at 1"/ft.

### PIPE CONNECTIONS TO MANHOLE

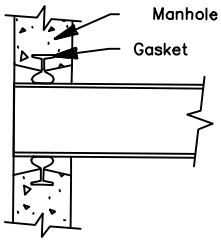


Cast in place gasket

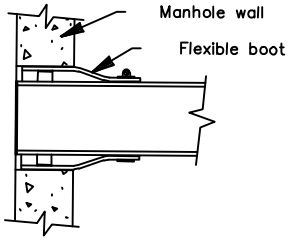


Flexible boot connector

### TROUGH CONSTRUCTION

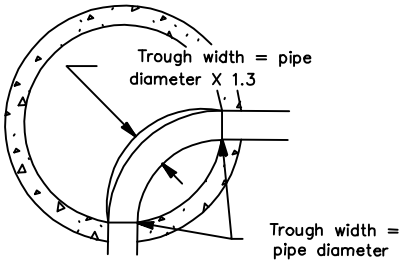


### MINIMUM PIPE INVERT DROP THROUGH MANHOLE

| TROUGH DEFLECTION | MIN. DROP (Ft.) |
|---|---|
| 0° – 22° | .10 |
| 23° – 45° | .20 |
| 46° – 90° | .30 |

### PRECAST SECTION JOINT

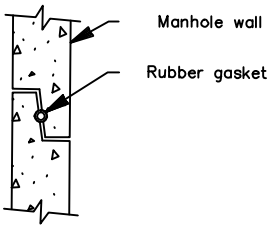


### FLAT TOP CONSTRUCTION

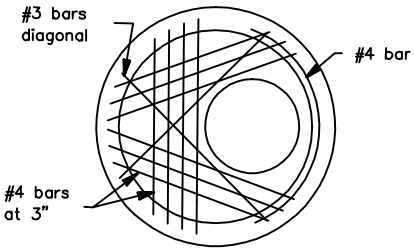


City of Bloomington Utilities Engineering Department

NO SCALE
2/21/94
by: M. Hicks

Drawing File: I:\COMMON\STANDARD DRAWINGS\STD 1.DWG
REVISED 02/18/08 T.A.

STANDARD SANITARY MANHOLE

STANDARD DETAIL NUMBER 1

An external drop pipe is required for any pipe which enters the manhole 12" or more above the outgoing pipe.

See Standard Detail Number 1 for sanitary manhole construction.

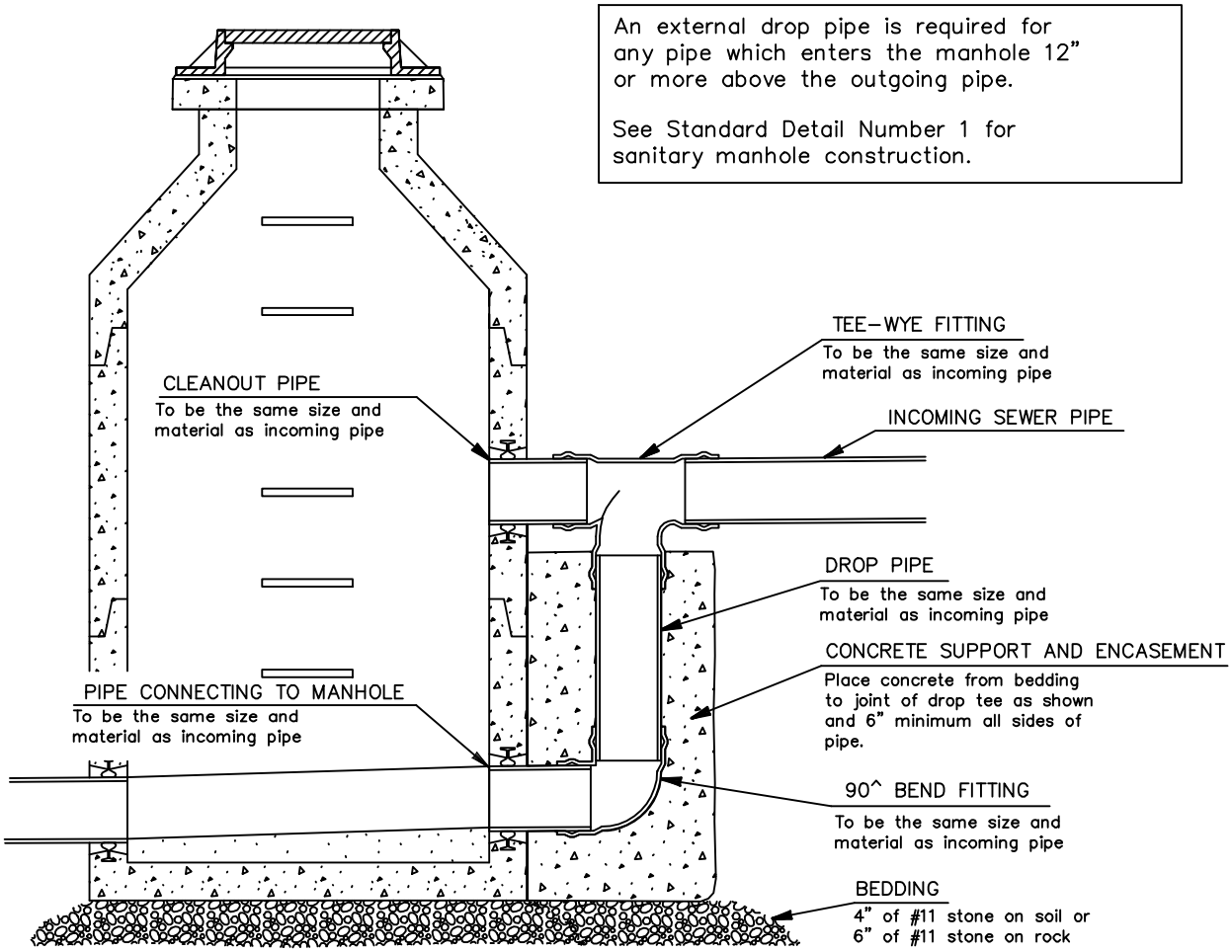


SECTIONAL VIEW

PIPE CONNECTIONS TO MANHOLE

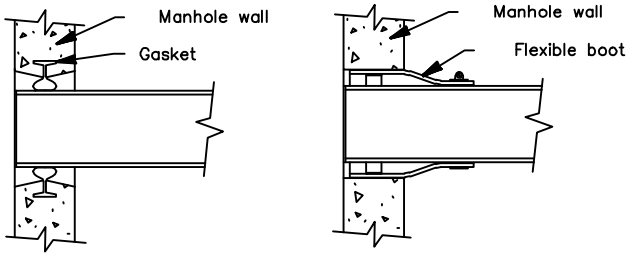


Cast in place gasket

Flexible boot connector

MINIMUM PIPE INVERT DROP THROUGH MANHOLE

| TROUGH DEFLECTION | MIN. DROP (Ft.) |
|---|---|
| 0° – 22° | .10 |
| 23° – 45° | .20 |
| 46° – 90° | .30 |

| City of Bloomington Utilities Engineering Department | | EXTERNAL DROP PIPE DETAIL FOR SANITARY MANHOLE | STANDARD DETAIL NUMBER 2 |
|---|---|---|---|
| NO SCALE 10/5/98 by: M. Hicks | Drawing File: I:\COMMON\STANDARD DRAWINGS\STD2.DGN REVISED 02/18/08 T.A. | | |

**PRECAST CONCRETE RISER RINGS**
A minimum 2" of riser ring shall be installed in areas to be sodded or seeded. No more than 12" of rings may be used to adjust the frame and cover to grade.

**PRECAST TOP SECTION**
A precast flat top shall be used when pipe depth is less than 6'. An eccentric top shall be used when pipe depth is 6' or greater.

**JOINT SEALING**
Joints between all manhole sections shall be sealed with a Rubber Gasket or Butyl Rubber Rope..

**PRECAST MANHOLE BARREL SECTION(S)**
The minimum total height of barrel sections is 5'-0".

**CAST or CORE DRILLED OPENINGS**
All openings shall be at least 4" from the top of the base.

**GASKETS and BOOTS**
Pipe to manhole connections shall be flexible boot or cast in place gasket. See special detail below and 4.4.2.2.5 of CBU Specifications.

**MANHOLE DRAIN**
Drain shall be a 1' x 1' opening through the concrete base and filled with #11 stone.

**MANHOLE BASE**
The base shall be precast or cast-in-place. A cast-in-place base must form into the barrel section joint.

**MANHOLE CONSTRUCTION**
Manhole shall be 4500 p.s.i. concrete reinforced with 10 x 10 - W10 x W10 welded wire fabric.
Wall and base thickness shall be a minimum of 5".

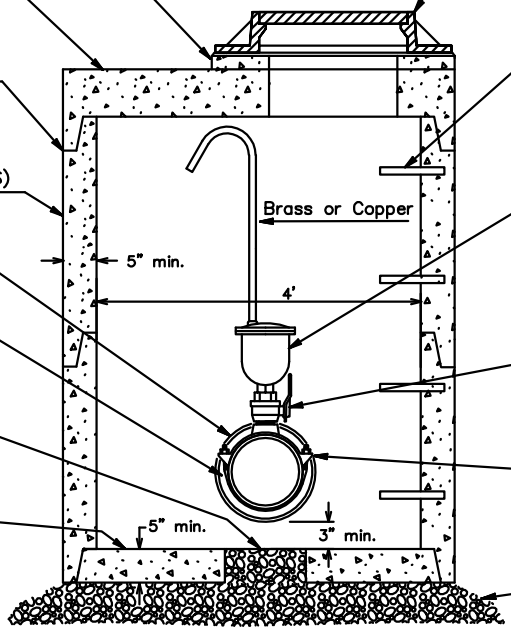


**MANHOLE FRAME AND COVER**
Frame shall be East Jordan Iron Works casting no. 1020, 1022 or an approved equivalent.
Cover shall be East Jordan Iron Works casting no. 1020A or an approved equivalent. "WATER" or "SEWER" shall be cast in each cover (as applicable).
All castings shall be coated.
Frame shall be set on Butyl Rubber Rope.

**MANHOLE STEPS**
Shall be constructed of Fiberglas reinforced polypropolene.
Install with nonshrink mortar or epoxy grout 12" or 16" apart and at a location allowing access to the table.

**AIR VALVE**
The air release, air vacumm, or combination air valve shall be sized according to system capacity and operating pressure.
The air valve shall be installed upright from a tap at the top of the water main.

**CORPORATION STOP BALL VALVE**
The corporation stop ball valve shall be sized to match the inlet size of the air valve. The valve shall have a lever for operation.

**TAPPING SADDLE AND TAP**
The tap and tapping saddle shall be sized to match the inlet size of the air valve. The tap shall be made at the top of the water main.

**BEDDING**
4" of #11 stone on soil or
6" of #11 stone on rock

SECTIONAL VIEW

PIPE INTERSECTIONS WITH MANHOLE

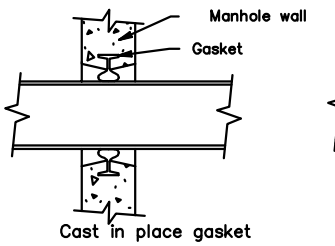


Cast in place gasket

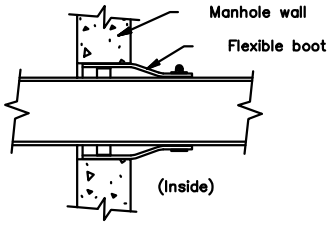


Flexible boot connector

PRECAST SECTION JOINT

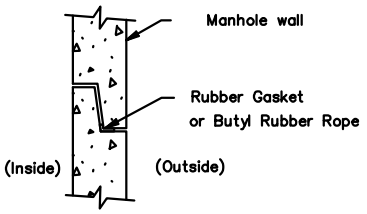


FLAT TOP CONSTRUCTION

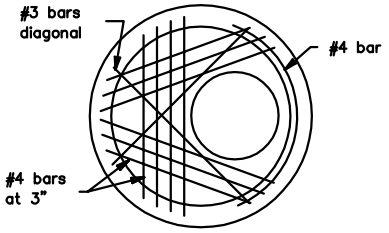


| City of Bloomington Utilities Engineering Department | | STANDARD AIR VALVE VAULT<br>12" OR SMALLER PIPE | STANDARD DETAIL NUMBER 3 |
|---|---|---|---|
| NO SCALE<br>2/21/94<br>by: M. Hicks | Drawing File: I:\COMMON\STANDARD DRAWINGS\STD3.DGN<br>REVISED 02/16/11 G.N. | | |

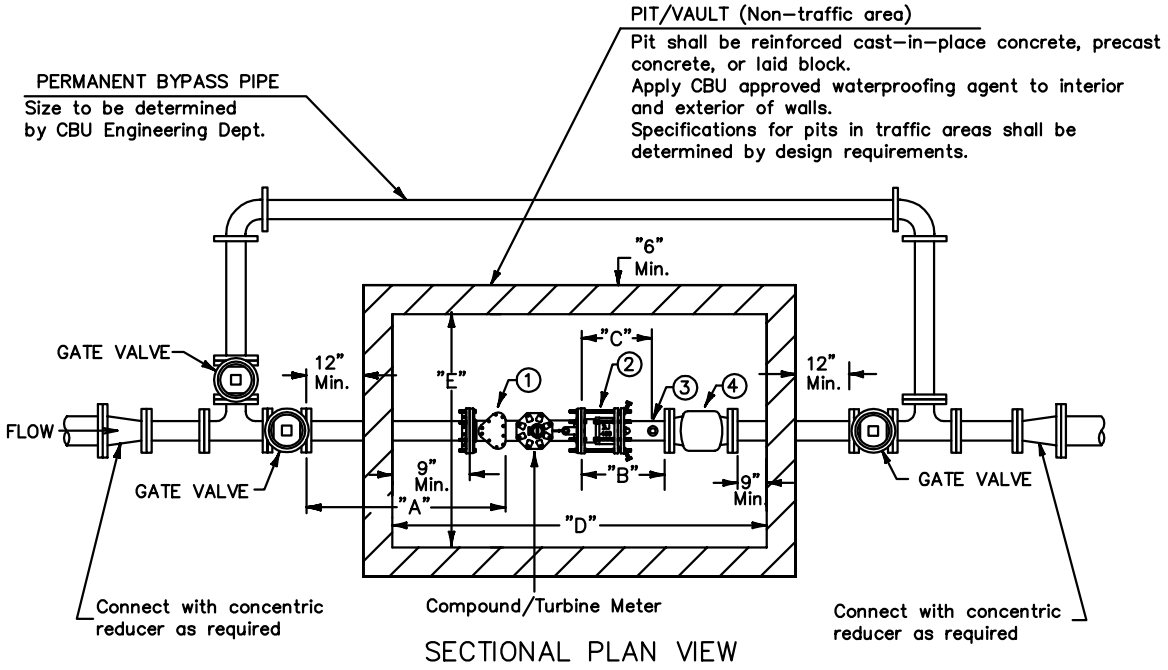


SECTIONAL PLAN VIEW

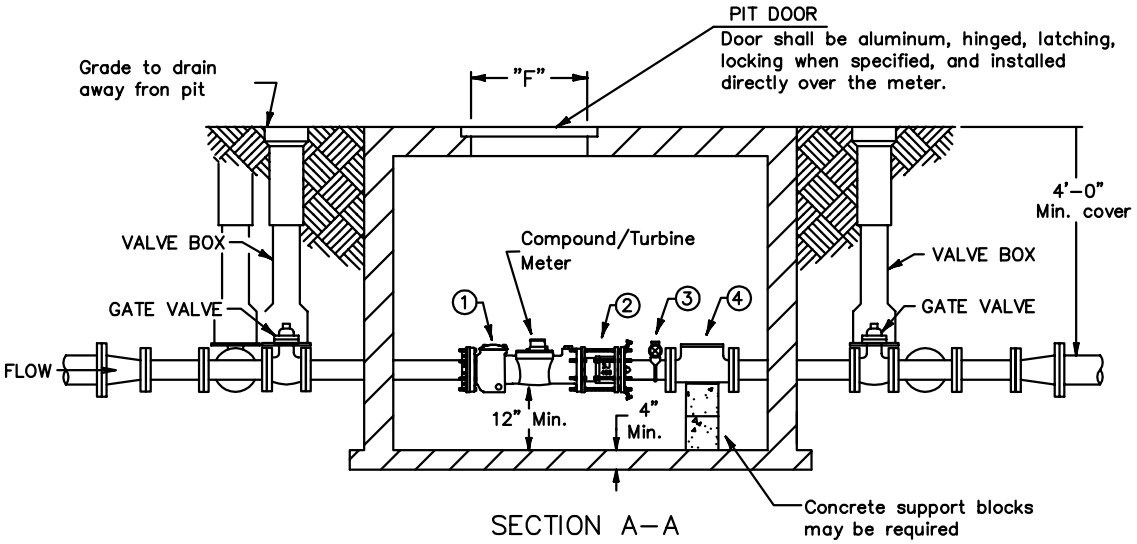


SECTION A-A

## LEGEND

1. STRAINER, Plate Type Only!
2. Dismantling Joint, Romac DJ400 or DJ405 (Set at Nominal Length)
3. 2" Test Tap, With Full Port Corporation Stop
4. Swing Arm Check Valve

## NOTES

All construction and materials shall meet CBU specifications.

* If an 8" Rockwell manifold meter is used add 33".

** Use of any other type of strainer must be approved by CBU Engineering.

| METER SIZE | "A" Min. length straight pipe before meter (Includes strainer) | "B" Min. length straight pipe after meter | "C" 2" test plug min. distance after meter | "D" Pit minimum inside length | "E" Pit minimum inside width | "F" Min. pit door size |
|---|---|---|---|---|---|---|
| 3" | 21" | 15" | 9" | 63" | 48" | 36"x36" |
| 4" | 28" | 20" | 12" | 78" | 48" | 36"x36" |
| 6" | 42" | 30" | 18" | 91" | 60" | 36"x48" |
| 8" | 56" | 40" | 24" | 124" * | 96" | 48"x48" |
| 10" | 70" | 50" | 30" | 150" | 96" | 48"x48" |

City of Bloomington Utilities Engineering Department

NO SCALE
2/21/94
by: M. Hicks

Drawing File: I:\COMMON\STANDARD DRAWINGS\STD4.DGN
Revised: 1/27/2011 G.N.

# STANDARD METER PIT DETAIL
## 3"-10" Meter Installation

STANDARD DETAIL NUMBER 4

## NOTES

1. All materials and construction shall meet CBU Construction Specifications.
2. All meter assemblies shall be specified by City of Bloomington Utilities (CBU).
3. A compact dual meter assembly is a factory assembled unit and tested for accuracy as a unit by the manufacturer.
4. Each meter shall be equipped with a pit door mounted electronic device for use with a touch reading system.
5. All fittings such as bends and tees shall be properly restrained.

PIT/VAULT (Non-traffic area)
Pit shall be reinforced cast-in-place concrete, precast concrete, or laid block.
Apply CBU approved waterproofing agent to interior and exterior of walls.
Specifications for pits in traffic areas shall be determined by design requirements.
Refer to CBU Specifications, Section 4.5.3.3 for additional information.

## LEGEND

① UL/FM APPROVED STRAINER
② METER See Notes at left
③ CHECK VALVE
④ Dismantling Joint
Romac DJ400 or DJ405.
(Set at Nominal Length)

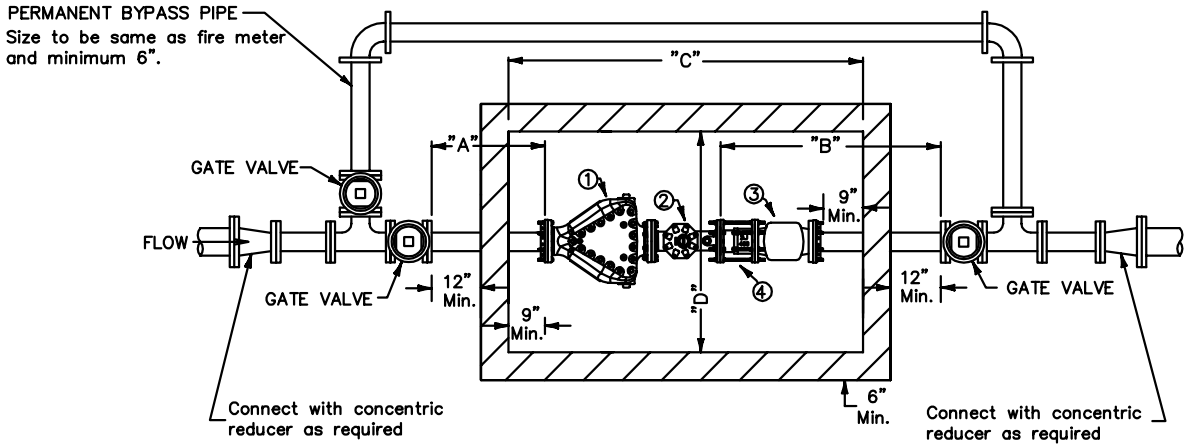


SECTIONAL PLAN VIEW

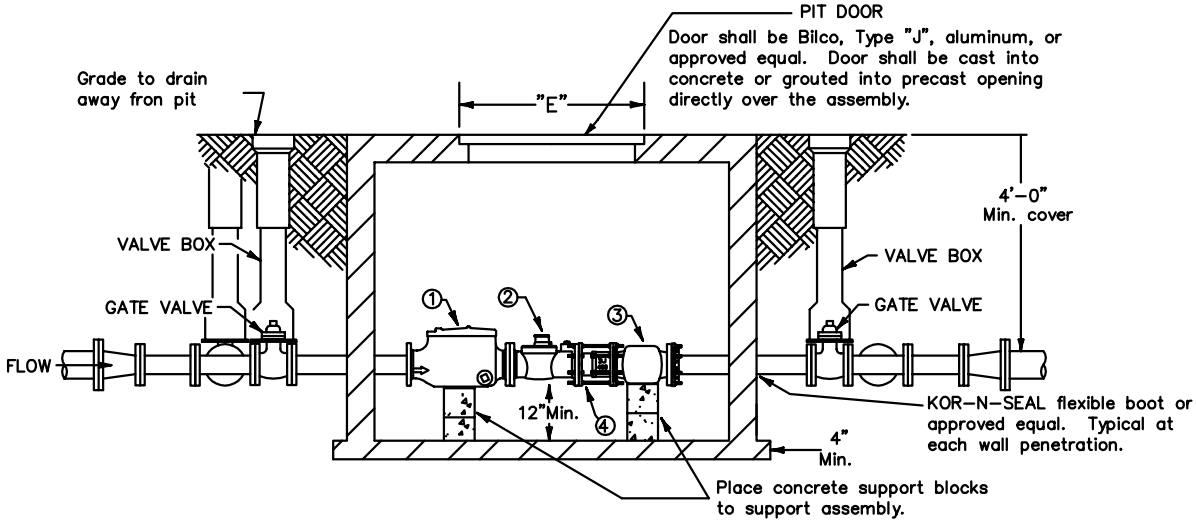


| FIRE METER SIZE | "A" Min. length straight pipe before compact assembly | "B" Min. length straight pipe after compact assembly | "C" Pit minimum inside length | "D" Pit minimum inside width | "E" Min. pit door size |
|---|---|---|---|---|---|
| 4" | 24" | 30" | 70" | 60" | 36"x36" |
| 6" | 30" | 30" | 84" | 66" | 36"x36" |
| 8" | 40" | 30" | T.B.D. | 70" | 48"x48" |
| 10" | 50" | 30" | T.B.D. | 74" | 48"x48" |

City of Bloomington Utilities Engineering Department

NO SCALE
REVISED 01/28/11

Drawing File: I:\COMMON\STANDARD DETAIL DRAWINGS/STD6.DGN

# DUAL FIRE/DOMESTIC METER ASSEMBLY
## 4"-10" Meter Installation

STANDARD DETAIL NUMBER 6

*IMPORTANT NOTE*
If the detector check valve is greater than 50 feet from the City water main, a check valve in a pit shall be required at the City main.

DISMANTLING JOINT
Romac Industries
DJ 400 or DJ405
(Set at Nominal Length)

PIT/VAULT (Non-traffic area)
Pit shall be reinforced cast-in-place concrete, precast concrete, or laid block. Apply CBU approved waterproofing agent to interior and exterior of walls. Specifications for pits in traffic areas shall be determined by design requirements.

WATER METER
For more Water Meter Construction Specifications see "Standard Detail No. 4"

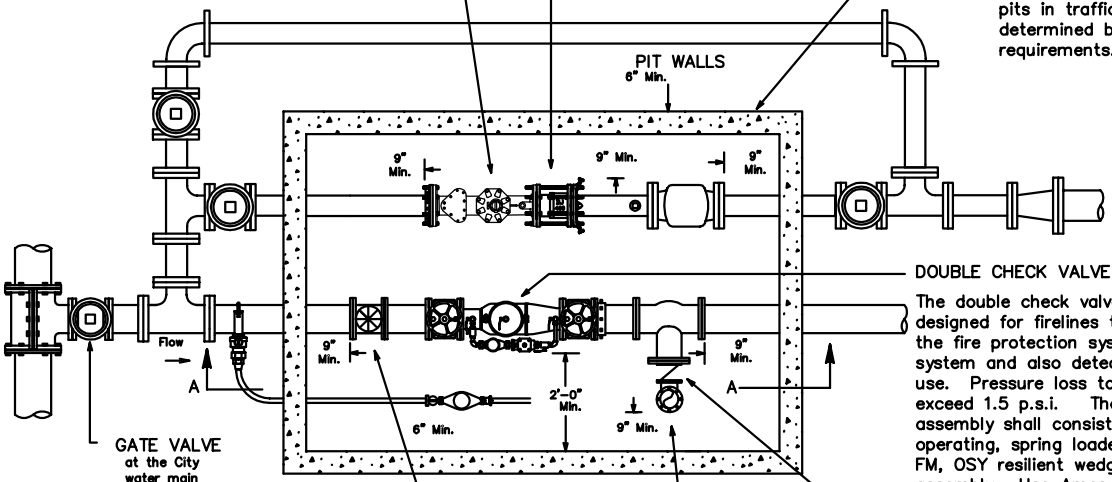


DOUBLE CHECK VALVE DETECTOR ASSEMBLY
The double check valve detector assembly shall be designed for firelines to prevent backflow from the fire protection system to the potable water system and also detect leakage or unauthorized use. Pressure loss to open the valve shall not exceed 1.5 p.s.i. The double check detector assembly shall consist of two independently operating, spring loaded check valves, two UL, FM, OSY resilient wedge gate valves, and bypass assembly. Use Ames 3000SS or approved equal. Connect to piping with a flange adapter coupling.

OPTIONAL DOMESTIC SERVICE
Shall be tapped before the dector check valve. all service lines shall be type "K" copper with flare type joints. All fittings shall conform to ANSI/AWWA C800 and 4.4.4.1.4.1 of CBU construction specifications.

O, S & Y Valve with supervised Post Indicator

4" Extension up to Fire Department Storz Connection

Check Valve with Ball Drip Valve To Floor Drain

## SECTIONAL PLAN VIEW

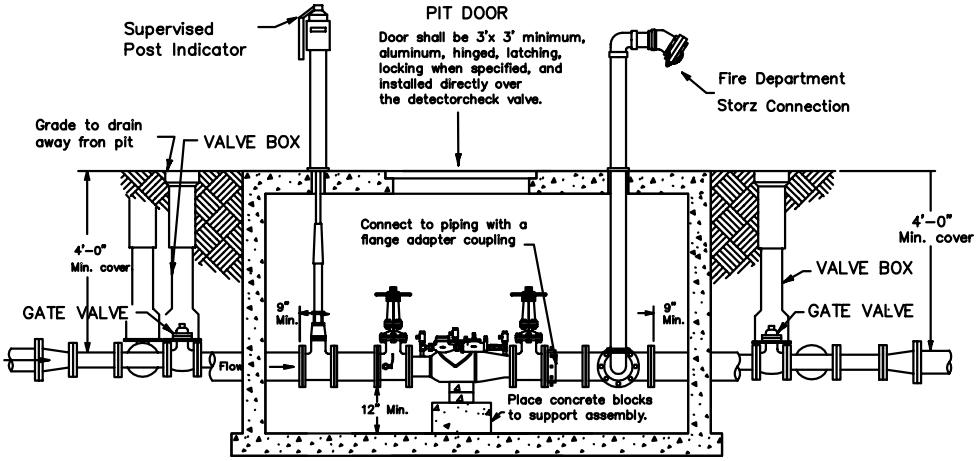


SECTION A-A

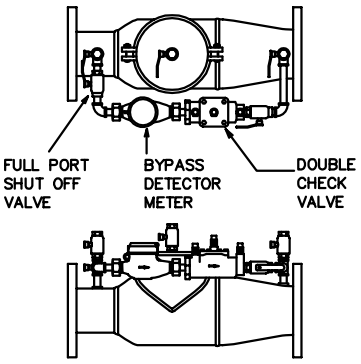


BYPASS ASSEMBLY
Bypass Detector Meter to read gallons

NO SCALE

| City of Bloomington Utilities Engineering Department | |
|---|---|
| G.A.N<br>REVISED<br>01/31/2011 | Drawing File:<br>I:\COMMON\STANDARD DRAWINGS\STD7A.dgn |

STANDARD FIRE LINE DOUBLE CHECK VALVE
3" OR LARGER DOMESTIC METER
INSTALLATION DETAIL

STANDARD DETAIL NUMBER 7a

## SECTIONAL PLAN VIEW

### IMPORTANT NOTE

If the detector check valve is greater than 50 feet from the City water main, a check valve in a pit shall be required at the City main.

### DOUBLE CHECK VALVE DETECTOR ASSEMBLY

The double check valve detector assembly shall be designed for firelines to prevent backflow from the fire protection system to the potable water system and also detect leakage or unauthorized use. Pressure loss to open the valve shall not exceed 1.5 p.s.i. The double check detector assembly shall consist of two independently operating, spring loaded check valves, two UL, FM, OSY resilient wedge gate valves, and bypass assembly. Use Ames 3000SS or approved equal. Connect to piping with a flange adapter coupling.

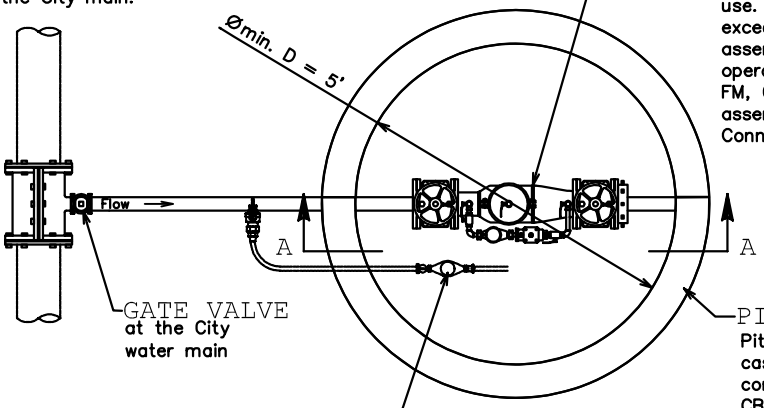


### GATE VALVE

at the City water main

### PIT/VAULT (Non-traffic area)

Pit shall be reinforced cast-in-place concrete, precast concrete, or laid block. Apply CBU approved waterproofing agent to interior and exterior of walls. Specifications for pits in traffic areas shall be determined by design requirements.

### OPTIONAL DOMESTIC SERVICE tapped on fire line

shall be before the detector check valve. All service lines shall be type "K" copper with flair type joints. All fittings shall conform to ANSI/AWWA C800 and 4.4.4.1.4.1 of CBU Construction Specifications. Install in a yoke with an angle yoke valve each side of meter. Install 24" to 36" from the bottom of the door.

### Frame & LID

Frame shall be East Jordan Iron works casting # 1020, 1022 or an approved equivalent.
Cover shall be East Jordan Iron Works casting # 1020A or an approved equivalent.
"WATER" shall be cast in each cover.
All castings shall be coated.
Frame shall be set on Butyl Rubber Rope.

## SECTION A-A

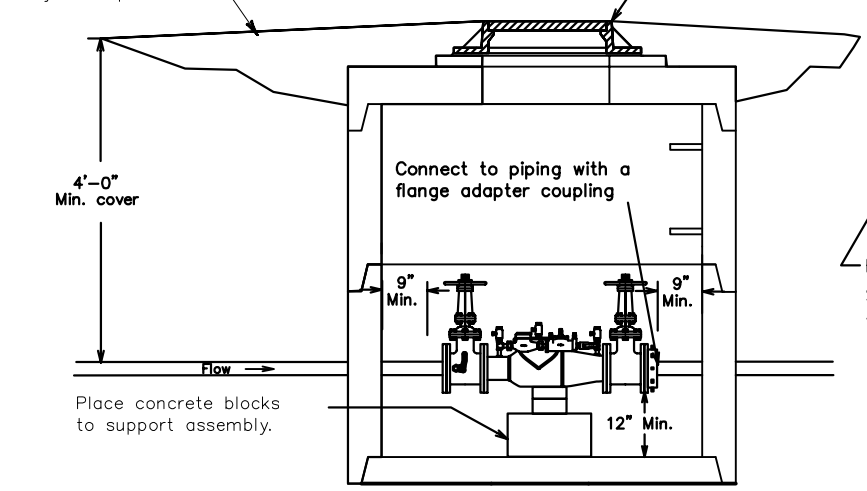


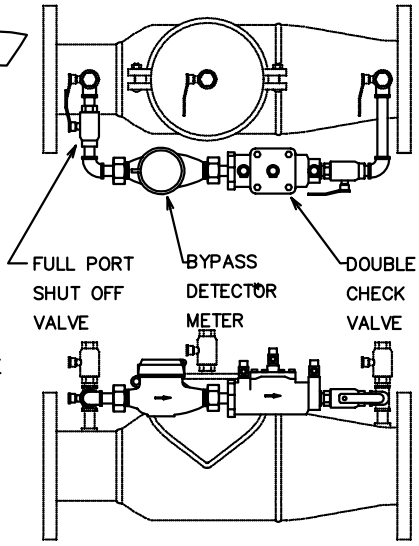


## BYPASS ASSEMBLY

* Bypass Detector Meter to read gallons

LAST REVISION 02 / 15 / 11 by G.N.

City of Bloomington Utilities Engineering Department

| | |
|---|---|
| NO SCALE<br>7/28/04<br>By:B.Kiele-Dunsche | Drawing File: P:\ENGINEER\DRAW\STD7.HGL<br>Word File: P:\RULES\STD7-2/97.DOC |

STANDARD 2 1/2" FIRE LINE DOUBLE CHECK VALVE / DETECTOR METER INSTALLATION DETAIL

STANDARD DETAIL NUMBER 7b

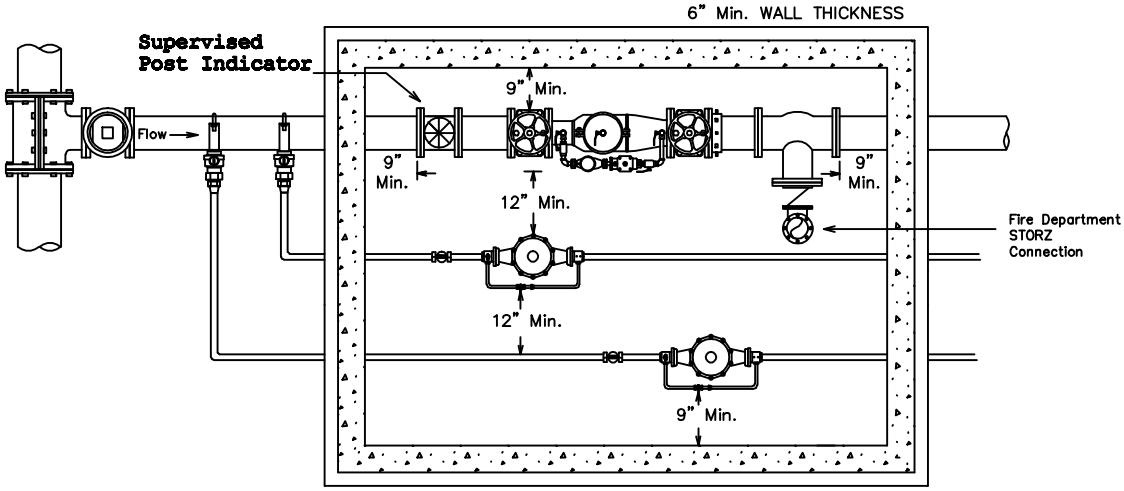


4"–6" DOUBLE CHECK VALVE VAULT WITH DOMESTIC METERS

4"–6" AMES 3000SS WITH ONE 2" METER SETTER
"MINIMUM INSIDE VAULT DIMENSIONS" 10'L X 5'W

4"–6" AMES 3000SS WITH TWO 2" METER SETTERS
"MINIMUM INSIDE VAULT DIMENSIONS" 10'L X 7'W

VAULT DOOR MINIMUM 3'X3'

8"–12" DOUBLE CHECK VALVE VAULT WITH DOMESTIC METERS

8"–12" AMES 3000SS WITH ONE 2" METER SETTER
"MINIMUM INSIDE VAULT DIMENSIONS" 11'L X 5'W

8"–12" AMES 3000SS WITH TWO 2" METER SETTERS
"MINIMUM INSIDE VAULT DIMENSIONS" 11'L X 7'W

VAULT DOOR MINIMUM 4'X4'

## SECTIONAL PLAN VIEW

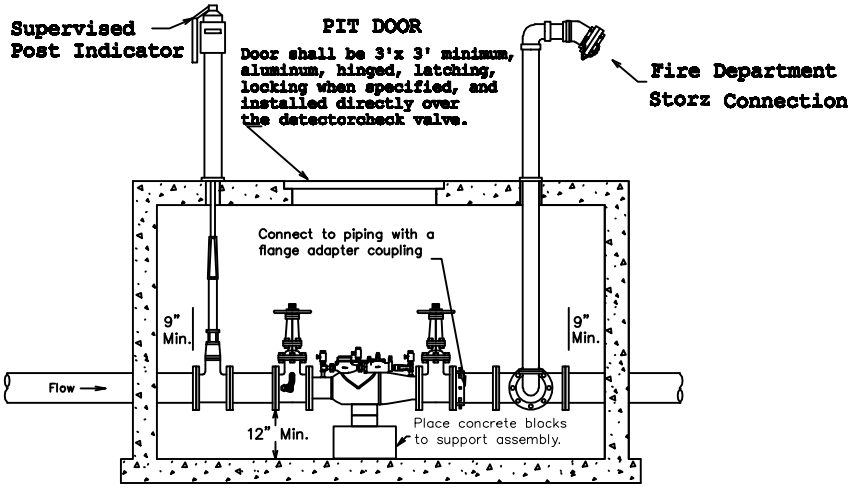


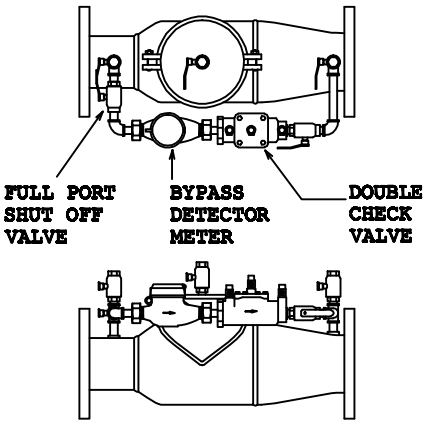


**BYPASS ASSEMBLY**

**Bypass Detector Meter to read gallons**

NO SCALE

| City of Bloomington Utilities Engineering Department | |
|---|---|
| T. AXSOM<br>REVISED<br>06/19/09 | Drawing File:<br>I:\COMMON\STANDARD DRAWINGS\STD7C.dgn |

STANDARD FIRE LINE DOUBLE CHECK VALVE
2" OR SMALLER DOMESTIC METER
INSTALLATION DETAIL

STANDARD DETAIL NUMBER 7C

NOTES

1. For connection to existing water mains, a 6" tapping valve and saddle shall be used in place of the gate valve and anchor coupling.

FIRE HYDRANT

Fire hydrants shall conform to ANSI/AWWA C502 and must be Kennedy Guardian model K81 or Mueller Super Centurion 200 (catalog no. A–423) or Waterous Pacer Classic. These are dry–barrel type firehydrants with a 5." main valve opening, two hose nozzles and one pumper nozzle. Hydrants shall have a mechanical joint type connection and shall be painted according to 4.4.4.4. FIRE HYDRANTS.

Install fire hydrant at a minimum of 2' from structures or obstructions and set the hydrant bury line 2" above finished grade. The pumper nozzle must face the street.

6" M.J. GATE VALVE (See Note 1)
Gate valves shall be cast iron body, fully bronze mounted, with a resilient seat and a non rising stem in accordance with AWWA C509.

VALVE BOX
Valve box shall be a cast iron, three–piece adjustable type. Cover shall be labeled "WATER".

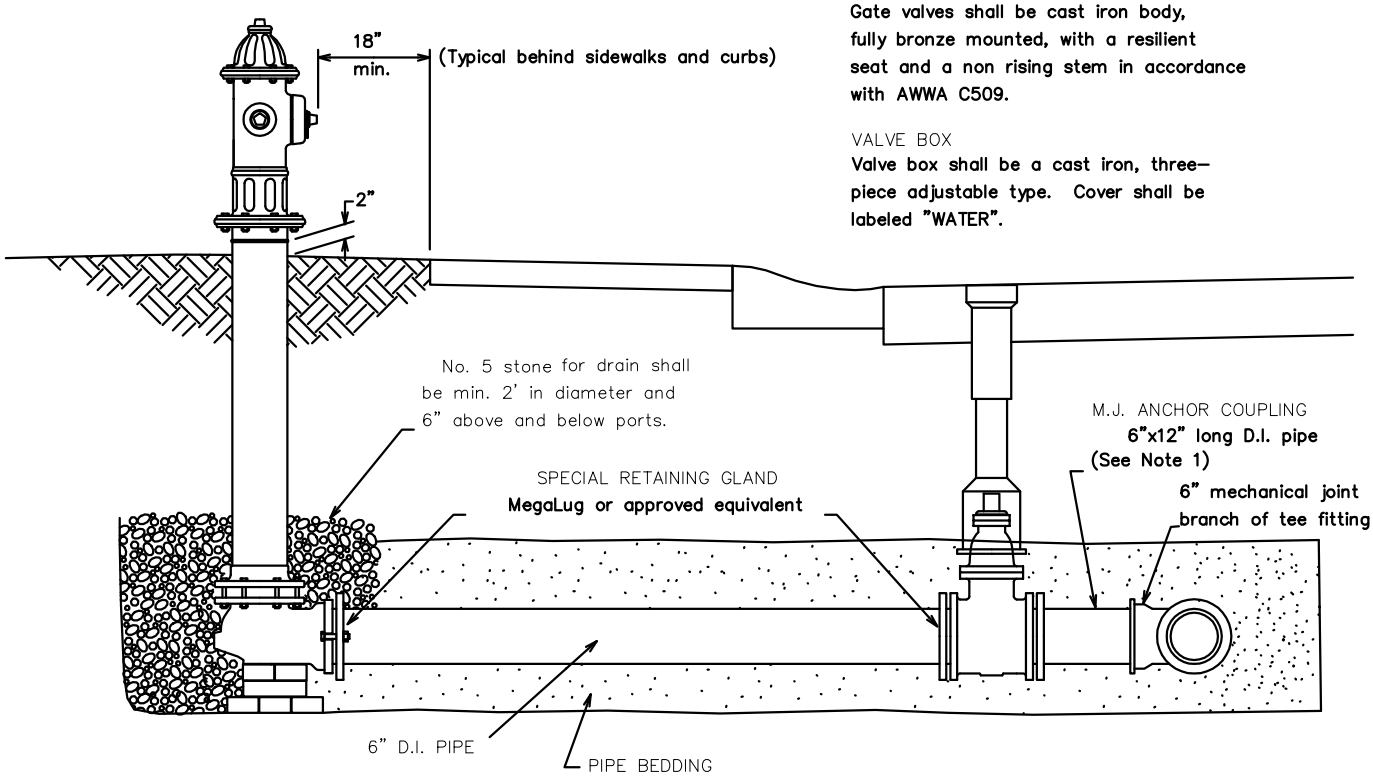


PIPE BEDDING
4" of no. 11 stone in soil or
6" of no. 11 stone in rock

BACKFILL
No. 11 stone from bedding to 1' over top of pipe.
Compacted No. 53 stone beneath and within 5' of pavement or clean native soil in other areas.

REVISED 02/15/2011 G.N.
REVISED 02/23/2010 T.L.
REVISED 02/08/2008 T.A.

City of Bloomington Utilities Engineering Department

NO SCALE
9/1/94
M. Hicks

Drawing File: I:\COMMON\STANDARD DRAWINGS\STD8.DGN

# STANDARD FIRE HYDRANT AND CONNECTION DETAIL

STANDARD DETAIL NUMBER 8

# City of Bloomington Utilities
## Typical Standard for
# Water System Nomenclature

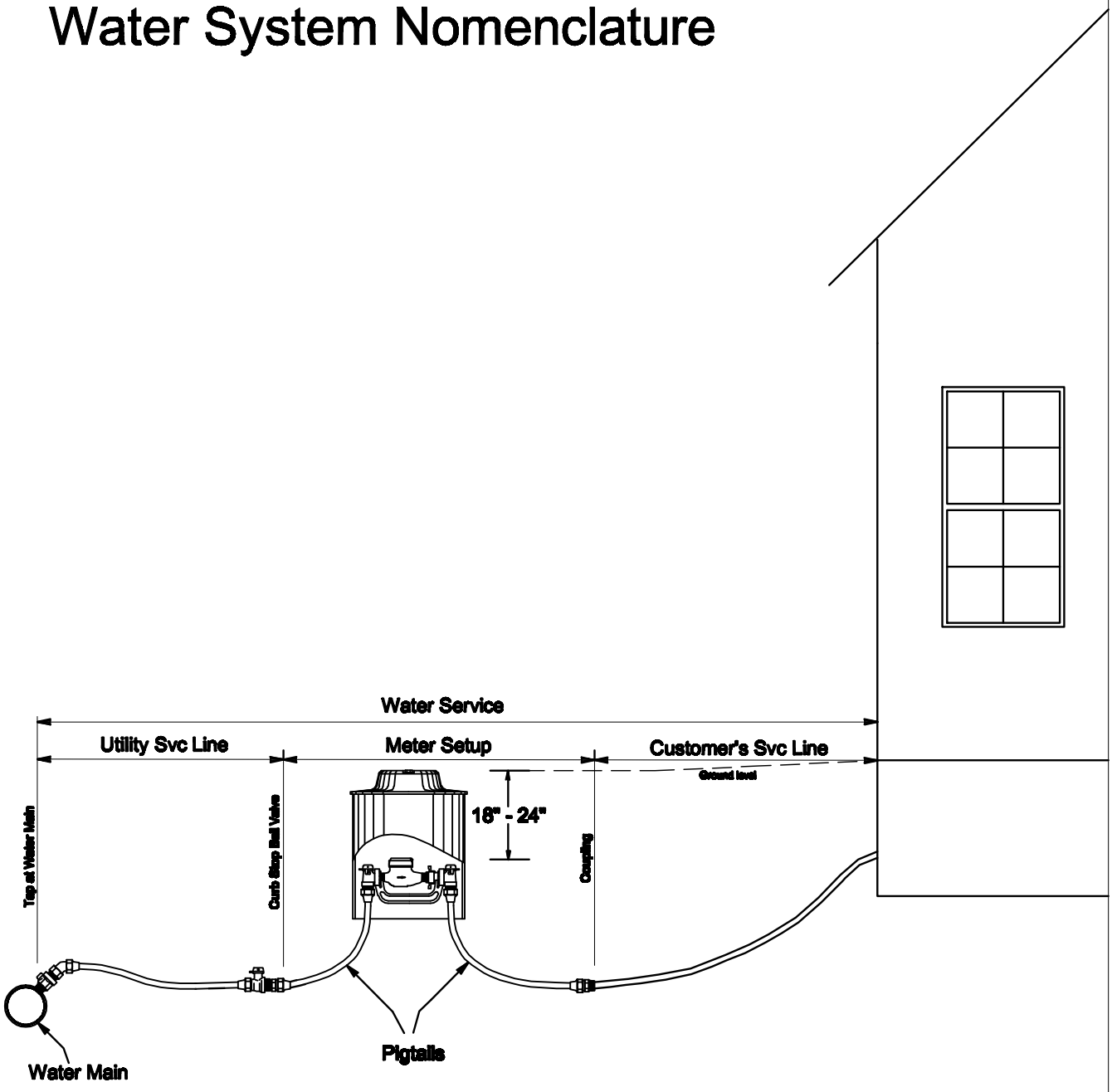


| City of Bloomington Utilities Engineering Department | | WATER SYSTEM NOMENCLATURE | STANDARD DETAIL NUMBER 10 |
|---|---|---|---|
| NO SCALE<br>03/30/06<br>N. Axsom | Drawing File:<br>I:Common\Standard Drawing\std10.dwg | | |

# TYPICAL TRENCH SECTION

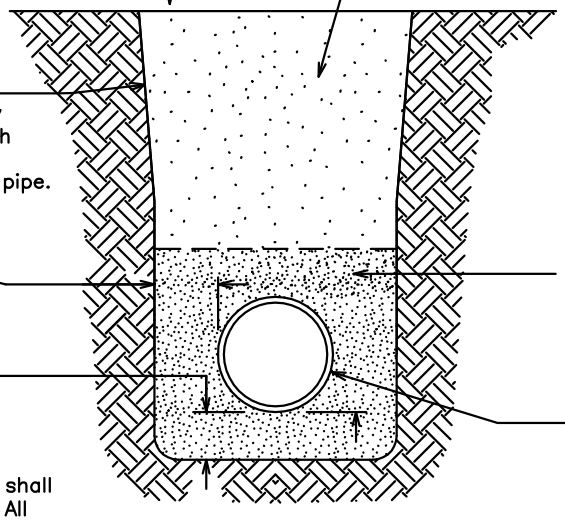

**SECONDARY BACKFILL**
Under or within 5' of pavement backfill shall be in accordance with the agency issuing the permit. If no permit is required full depth #53 stone compacted in six inch (6") lifts must be used. In unimproved areas backfill may be the same materials as excavated if it is good native material, but may contain no stone larger than six inches (6") in its greatest dimension.

Repair surface as indicated in the Special Conditions.

**TRENCH BANKS**
Where necessary, banks may be cut back on slopes which shall not extend lower than 12 inches above the top of pipe.

**TRENCH WALL**
Shall be 7" minimum from the pipe each side.

**PIPE BEDDING**
4" No. 11 stone on soil
6" No. 11 stone on rock

Bedding shall conform to ASTMD-2321, Class 1, and shall be no. 11 crushed stone. All over-excavation shall be filled with no. 11 crushed stone or Class D concrete.

**PRIMARY BACKFILL**
Backfill to 12" above top of pipe with no.11 stone.

**PVC PIPE**
Shovel cut and compact backfill beneath the haunch area of the pipe.

**TRENCH SAFETY SYSTEMS**
All trench work shall be in compliance with OSHA Part 26 of the Code of Federal Regulations.

**EXCAVATION DEPTH**
When pipe grades are not defined on the contract drawings, maintain a minimum of 48 inches of cover over the top of the pipe except as otherwise ordered by the Engineer.

Revised 2/11/2011 G.N.
Revised 2/13/2008 T.A.

| City of Bloomington Utilities Engineering Department | | BEDDING AND BACKFILL DETAIL FOR PVC AND HDPE PIPE | STANDARD DETAIL NUMBER 11 |
|---|---|---|---|
| NO SCALE 10/5/98 M. Hicks | Drawing File: I:\COMMON\STANDARD DRAWINGS\STD11.DGN | | |

# TYPICAL TRENCH SECTION

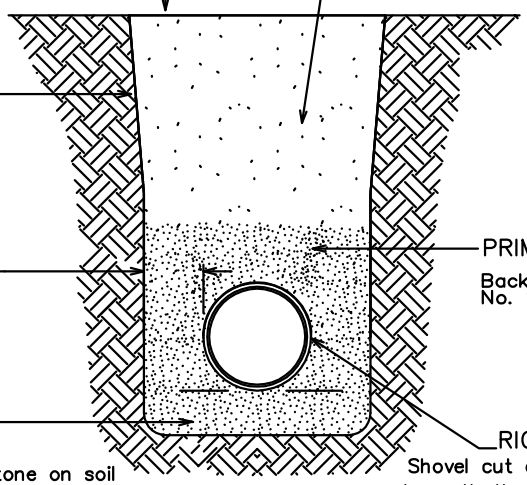

**SECONDARY BACKFILL**

Under, or within 5' of pavement, backfill shall be in accordance with the agency issuing the permit. If no permit is required, full depth #53 stone compacted in six inch (6") lifts must be used. In unimproved areas, backfill may be the same materials as excavated if it is good native material, but may contain no stone larger than six inches (6") in its greatest dimension.

Repair surface as indicated in the Special Conditions.

**TRENCH BANKS**

Where necessary, banks may be cut back on slopes which shall not extend lower than 12 inches above the top of pipe.

**TRENCH WALL**

Shall be 7" minimum from the pipe each side.

**PRIMARY BACKFILL**

Backfill to extend 12" above pipe with No. 11 or No. 12 stone.

**PIPE BEDDING**

4" No. 11 stone or no. 12 stone on soil
6" No. 11 stone or no. 12 stone on rock
Bedding shall conform to ASTMD-2321, Class 1, and shall be no. 11 or 12 crushed stone. All over-excavation shall be filled with crushed stone or class D concrete

**RIGID PIPE**

Shovel cut and compact backfill beneath the haunch area of the pipe.

**EXCAVATION DEPTH**

When pipe grades are not defined on the contract drawings, maintain a minimum of 48 inches of cover over the top of the pipe except as otherwise ordered by the Engineer.

**TRENCH SAFETY SYSTEMS**

All trench work shall be in compliance with OSHA Part 26 of the Code of Federal Regulations.

Revised 2/15/2011 G.N.
Revised 2/13/2008 T.A.

| City of Bloomington Utilities Engineering Department | | BEDDING AND BACKFILL DETAIL FOR ALL RIGID PIPES | STANDARD DETAIL NUMBER 12 |
|---|---|---|---|
| NO SCALE 02/01/08 | Drawing File: I:\COMMON\STANDARD DRAWINGS\STD12.DGN | | |

WATER SERVICE FROM A 2" PVC WATER MAIN TO A SINGLE METER SETUP

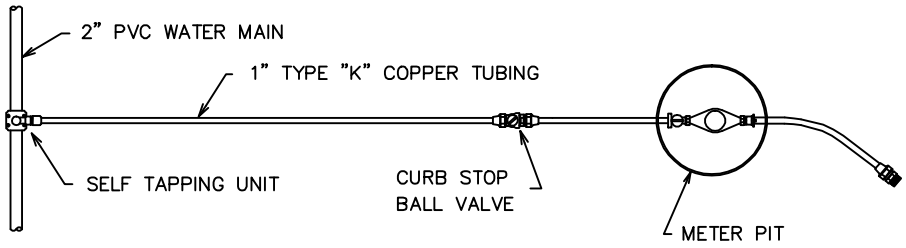


WATER SERVICE FROM A 2" PVC WATER MAIN TO A DOUBLE METER SETUP

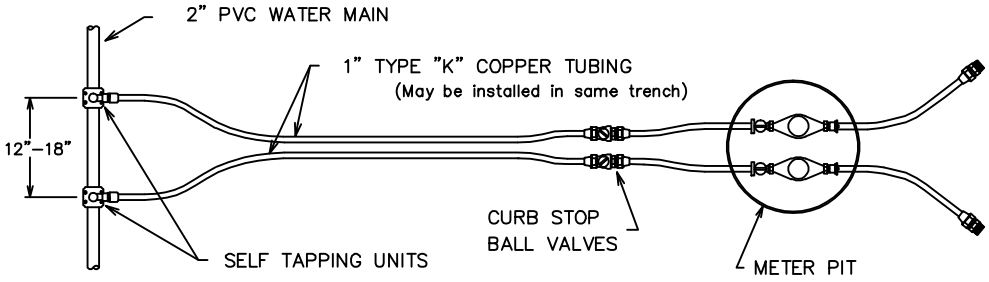


SELF TAPPING UNIT WITH COMPRESSION CONNECTOR OUTLET
(2" MAIN X 1" COPPER TUBING STYLE)

Self tapping unit shall be FastTap by Continental Water Products or equal.

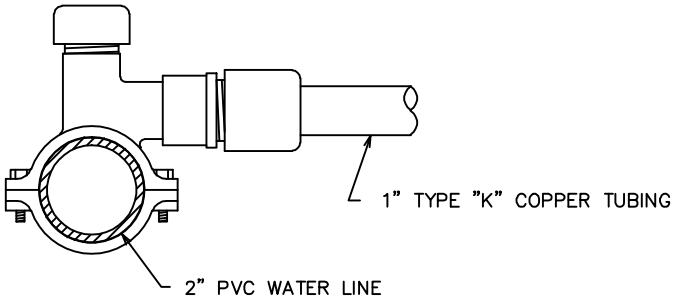


DRAWING FILE:
I\COMMON\STANDARD DRAWING\STD15.DWG

| | | | |
|---|---|---|---|
| City of Bloomington Utilities<br>Engineering Department | STANDARD WATER SERVICE<br>FROM A 2" PVC WATER MAIN | NO SCALE<br>5–5–93<br>by M. Hicks | STANDARD<br>DETAIL<br>NUMBER 15 |

| Duration | | Return Period Rainfall Depth (inches) | | | | | |
|---|---|---|---|---|---|---|---|
| Hours | Minutes | 2 | 5 | 10 | 25 | 50 | 100 |
| 0.08 | 5 | 0.461 | 0.535 | 0.590 | 0.674 | 0.739 | 0.805 |
| 0.17 | 10 | 0.705 | 0.841 | 0.940 | 1.087 | 1.201 | 1.315 |
| 0.25 | 15 | 0.875 | 1.054 | 1.184 | 1.374 | 1.522 | 1.67 |
| 0.5 | 30 | 1.152 | 1.437 | 1.638 | 1.9276 | 2.152 | 2.376 |
| 1 | 60 | 1.44 | 1.835 | 2.11 | 2.503 | 2.807 | 3.11 |
| 2 | 120 | 1.75 | 2.18 | 2.45 | 2.81 | 3.17 | 3.43 |
| 3 | 180 | 1.9 | 2.38 | 2.75 | 3.12 | 3.41 | 3.8 |
| 6 | 360 | 2.3 | 2.82 | 3.25 | 3.69 | 4.05 | 4.45 |
| 12 | 720 | 2.7 | 3.38 | 3.85 | 4.35 | 4.86 | 5.35 |
| 24 | 1440 | 3.08 | 3.91 | 4.39 | 5.01 | 5.6 | 6.09 |

DEPTH DURATION FREQUENCY TABLE
for Bloomington, Indiana

| Duration | | Return Period Rainfall Depth (inches) | | | | | |
|---|---|---|---|---|---|---|---|
| Hours | Minutes | 2 | 5 | 10 | 25 | 50 | 100 |
| 0.083 | 5 | 5.532 | 6.414 | 7.081 | 8.083 | 8.874 | 9.66 |
| 0.167 | 10 | 4.232 | 5.046 | 5.642 | 6.520 | 7.208 | 7.892 |
| 0.25 | 15 | 3.5 | 4.216 | 4.735 | 5.494 | 6.089 | 6.68 |
| 0.5 | 30 | 2.303 | 2.874 | 3.276 | 3.854 | 4.304 | 4.751 |
| 1 | 60 | 1.44 | 1.835 | 2.111 | 2.503 | 2.807 | 3.11 |
| 2 | 120 | 0.875 | 1.09 | 1.225 | 1.405 | 1.585 | 1.715 |
| 3 | 180 | 0.633 | 0.793 | 0.917 | 1.04 | 1.137 | 1.267 |
| 6 | 360 | 0.383 | 0.47 | 0.542 | 0.615 | 0.675 | 0.742 |
| 12 | 720 | 0.225 | 0.282 | 0.321 | 0.363 | 0.405 | 0.446 |
| 24 | 1440 | 0.128 | 0.163 | 0.183 | 0.209 | 0.233 | 0.254 |

INTENSITY DURATION FREQUENCY TABLE
for Bloomington, Indiana

NOTE1:

* PVC PIPE *
USE UNI-FLANGE 1390

* DUCTILE IRON PIPE *
USE MEGA LUG SERIES 1100 SDB

## SECTIONAL PLAN VIEW

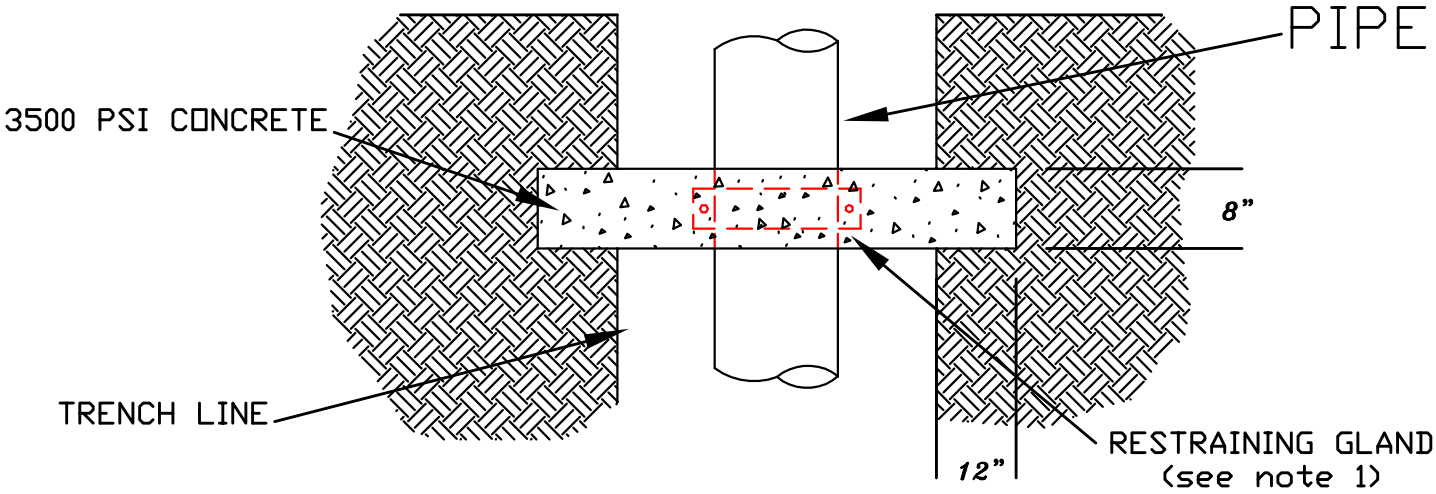


ANCOR SHALL EXTEND 12" BEYOND TRENCH INTO UNDISTURBED SOILS AND 12" ABOVE THE PIPE AND 12" BELOW THE TRENCH

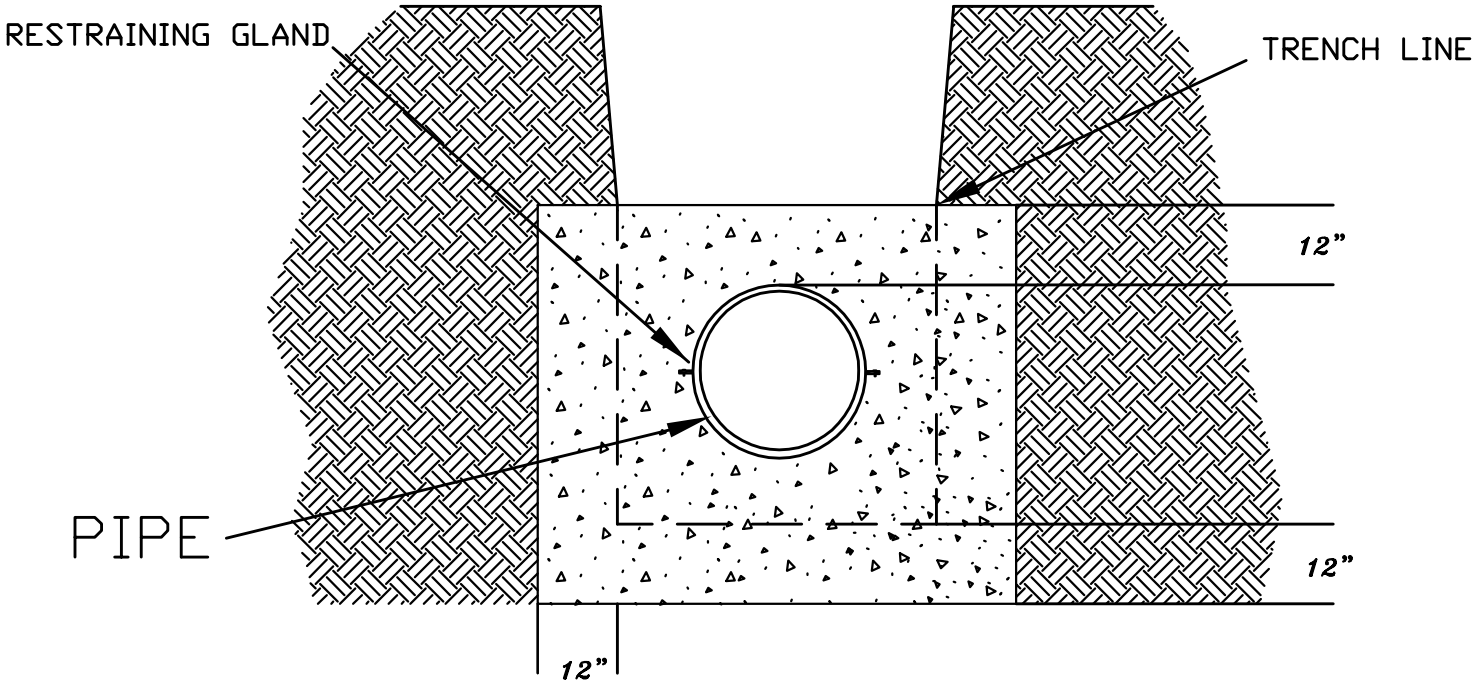


## SECTION

NOTE2:
INSTALL ANCHORS AT LOCATIONS AS DIRECTED BY THE UTILITIES ENGINEER.

Revised 2-15-2011 G.N.

| City of Bloomington Utilities Engineering | | CONCRETE PIPE ANCHOR | STANDARD DETAIL NUMBER 17 |
|---|---|---|---|
| NO SCALE 02/20/08 T.AXSOM | Drawing File: I:\COMMON\STANDARD DRAWINGS\STD17.DGN | | |

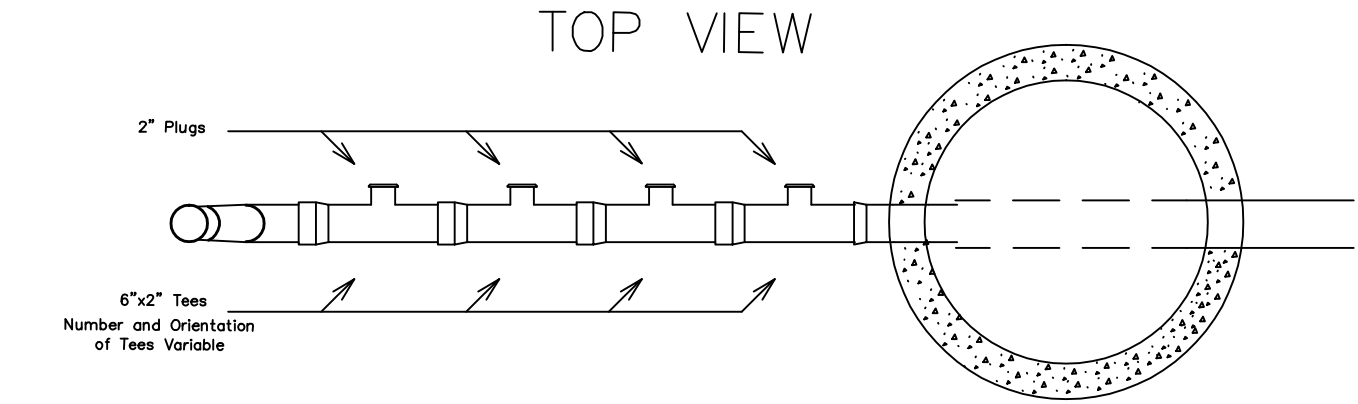


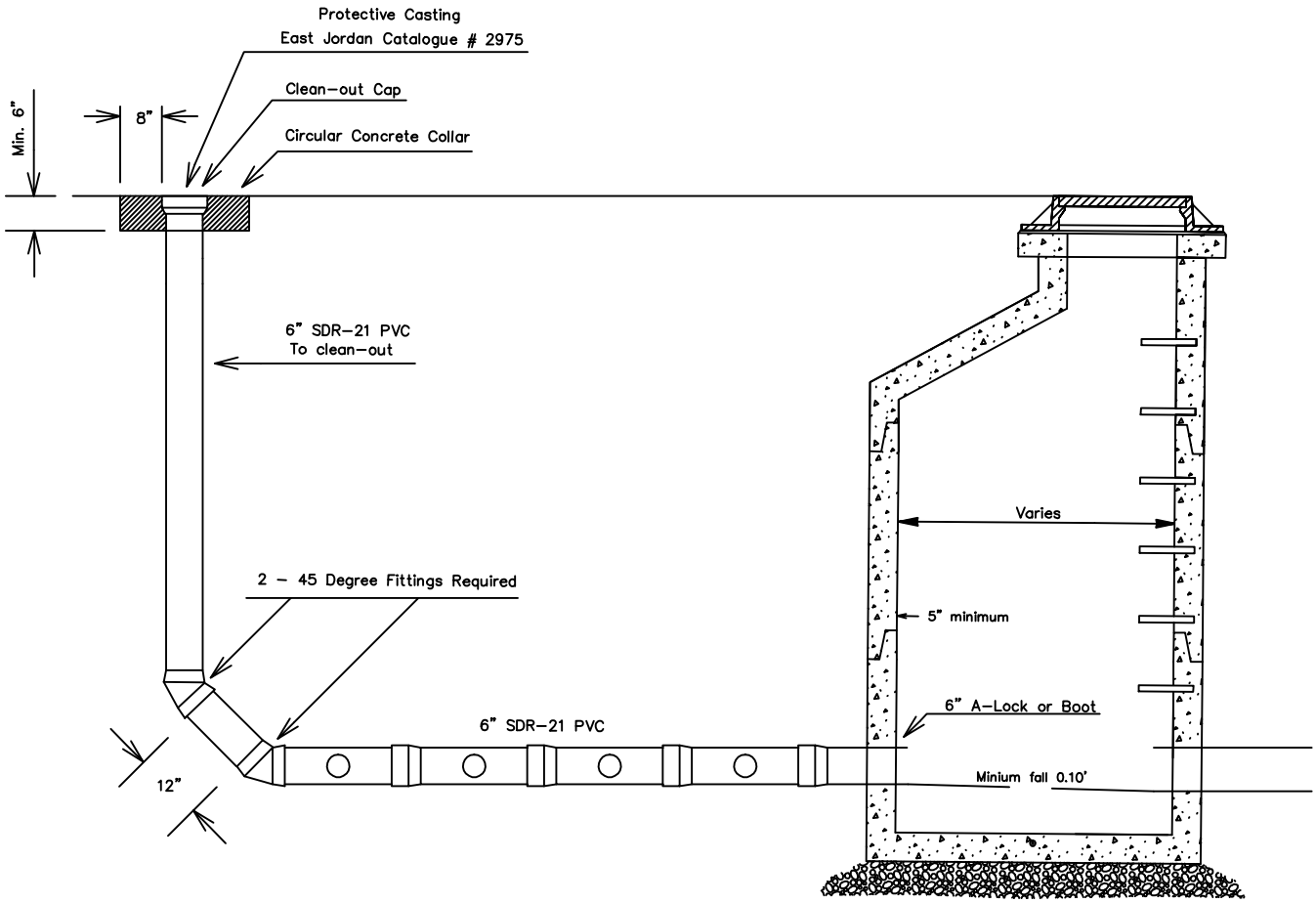


PROFILE

| City of Bloomington Utilities Engineering Department | | FORCE MAIN MANIFOLD DEVICE | STANDARD DETAIL NUMBER 18 |
|---|---|---|---|
| NO SCALE<br>02/12/08<br>T.AXSOM | DRAWING FILE<br>I:\COMMON\STANDARD DRAWINGS\STD.18.dwg | | |

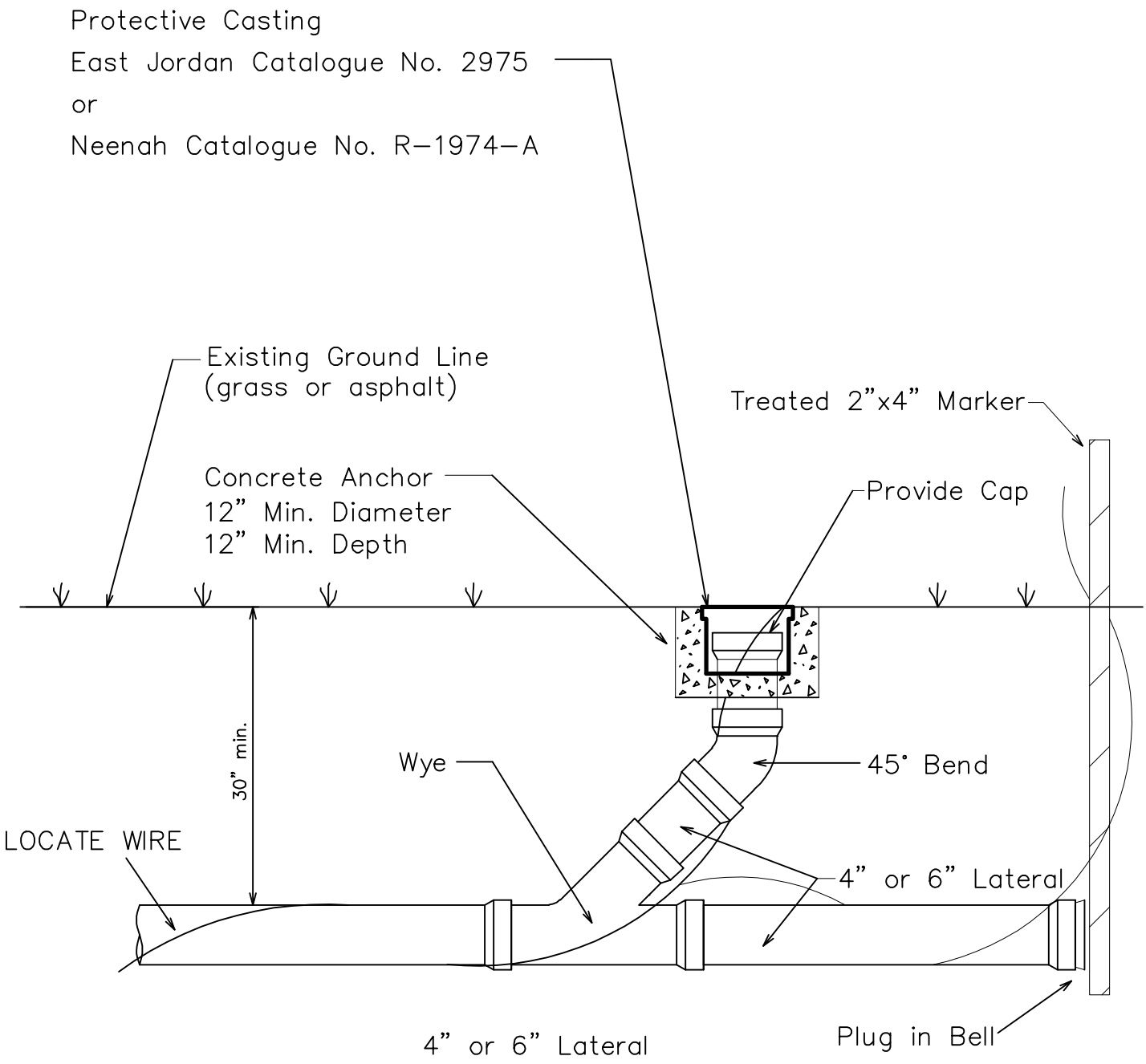


#10 solid insulated locate wire required from the city main to the clean-out at the property line.

PROFILE

| City of Bloomington Utilities Engineering Department | | STANDARD SANITARY LATERAL CLEAN-OUT FOR 4" AND 6" PIPES | STANDARD DETAIL NUMBER 19 |
|---|---|---|---|
| NO SCALE REVISED 02/26/10 | Drawing File: I:\COMMON\STANDARD DRAWINGS\STD19.DGN | | |

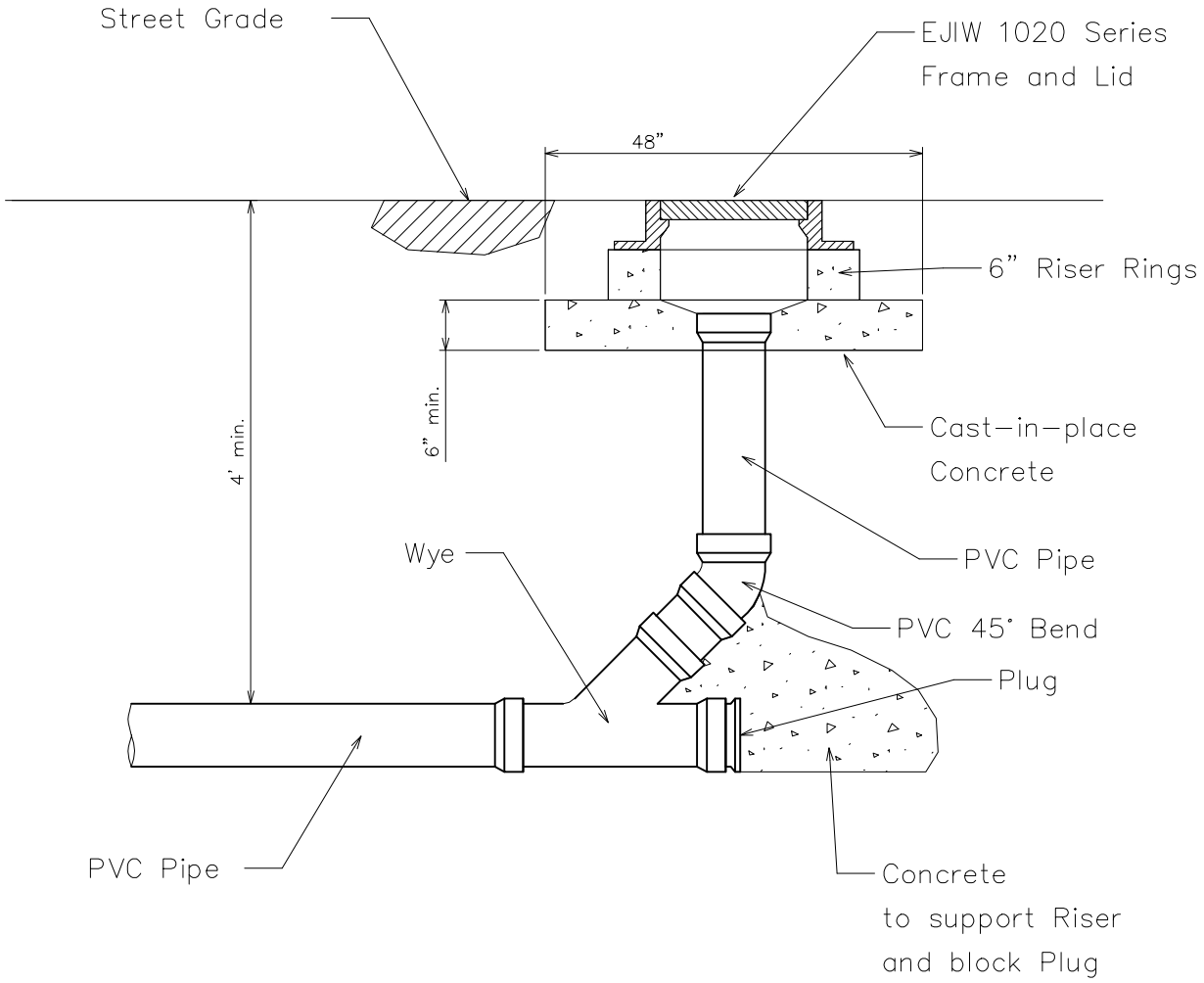


PROFILE

| City of Bloomington Utilities Engineering Department | | STANDARD SANITARY MAIN CLEAN-OUT FOR 8" PIPES AND LARGER | STANDARD DETAIL NUMBER 20 |
|---|---|---|---|
| NO SCALE<br>03/11/03<br>Kai Schnippe | Drawing File:<br>I:\common\Standard Drawings\std20.DGN | | |

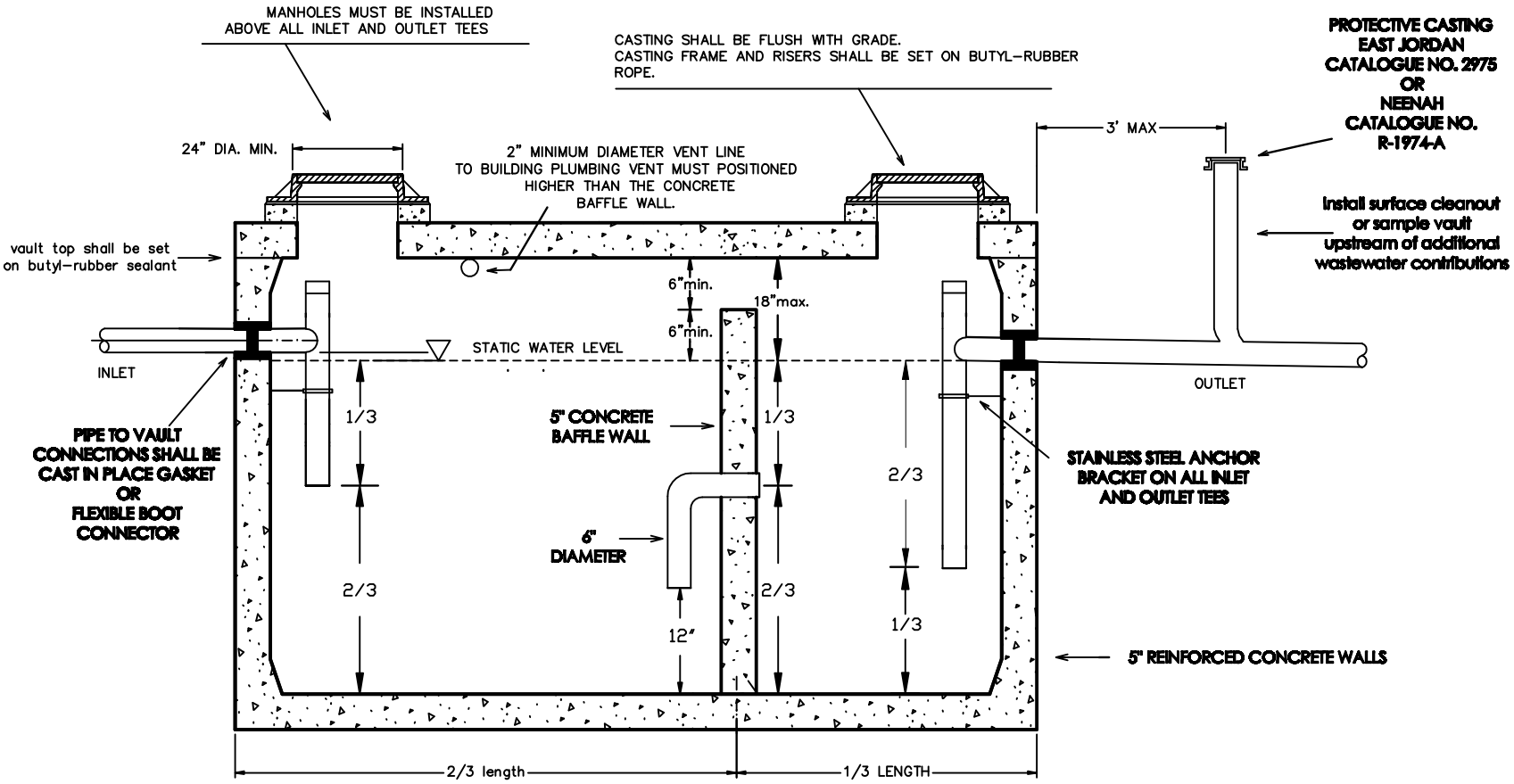


1. ALL PIPES MINIMUM 6" DIAMETER PVC.
2. GREASE INTERCEPTOR SHALL BE H-20 TRAFFIC RATED.
3. CASTINGS AND LIDS SHALL BE EJIW 1020 SERIES OR EQUIVALENT, NON BOLT-DOWN, AND LABELED " GREASE. "
4. ALL EQUIPMENT AND COMPONENTS INSTALLED WITHIN THE GREASE INTERCEPTOR MUST BE MANUFACTURED FROM NON-CORROSIVE MATERIALS.
5. VAULT CASTING JOINTS SHALL BE CONSTRUCTED WITH AN APPROVED TYPE WATERSTOP.
6. WATERPROOF, NON-SHRINK MORTAR SHALL BE USED TO COMPLETELY SEAL AROUND INTERCEPTOR COMPONENTS THAT PENETRATE THE VAULT WALL INCLUDING, BUT NOT LIMITED TO, ANCHOR BOLTS, VENT LINE, AND PIPING.
7. IPANEX OR AN APPROVED EQUIVALENT CONCRETE ADMIXTURE SHALL BE USED.
8. INLET PIPE INVERT SHALL BE A MINIMUM OF 2" HIGHER THAN THE OUTLET PIPE INVERT.

CITY OF BLOOMINGTON UTILITIES ENGINEERING
NO SCALE
06/07/07
T. ASBOM

STANDARD GREASE INTERCEPTOR

STANDARD DETAIL NUMBER 21

# PLASTIC LATERAL ASSEMBLY 1-1/4" SDR 7 OR 11 HDPE PIPE OR SDR 21 PVC ARCH PATTERN

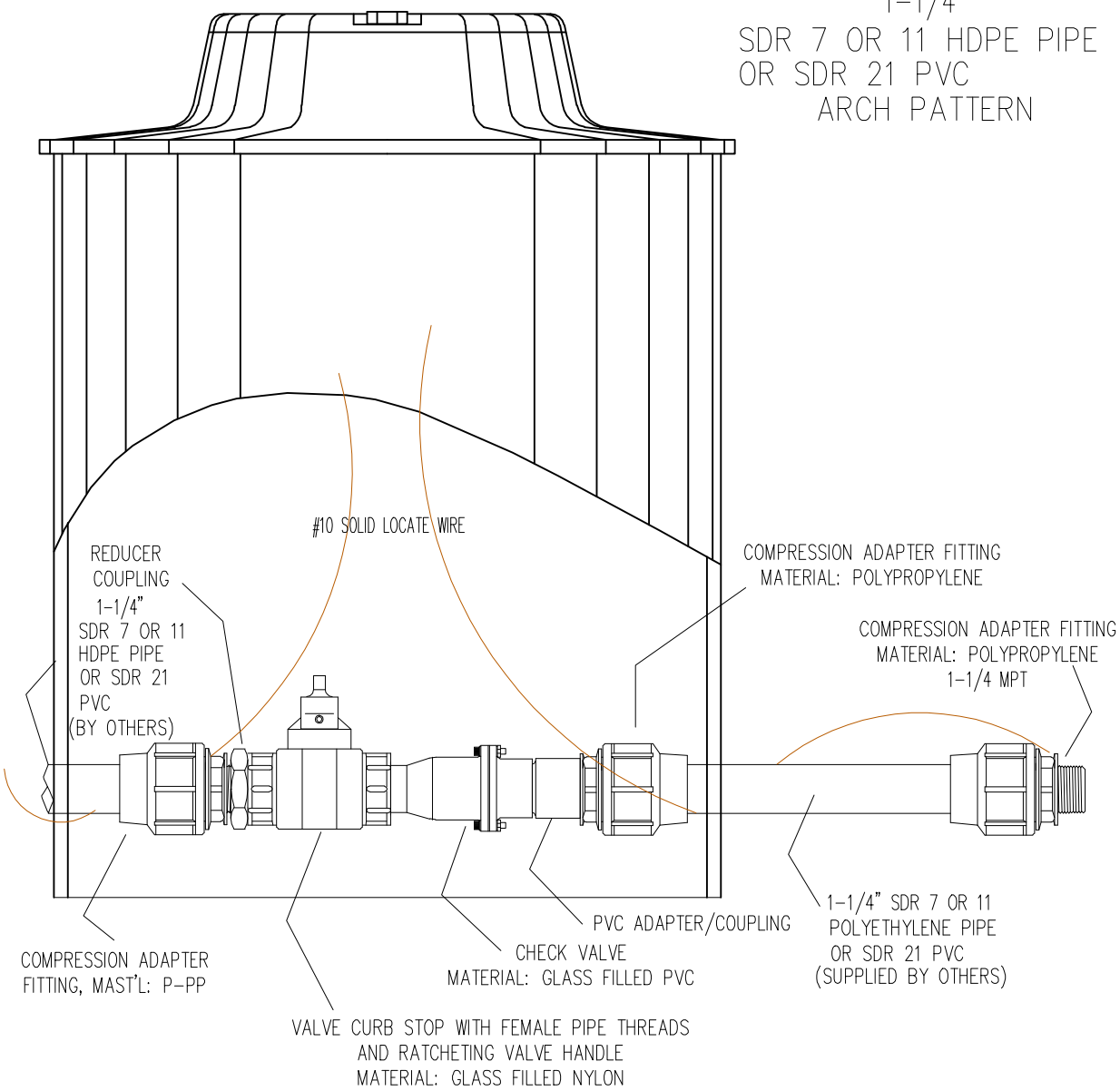


PRESSURE RATING: 150 psi

ASSEMBLY TO BE USED WITH 1-1/4" SDR 7 OR 11 POLYETHEYLENE PIPE OR SDR 21 PVC PIPE ONLY

| APS | WRS | 01/06/97 | - | |
|---|---|---|---|---|
| DR BY | CHK'D | DATE | ISSUE | SCALE |

environment one CORPORATION

PLASTIC LATERAL ASSEMBLY
1-1/4" SDR 7 OR 11 HDPE OR SDR 21 PVC PIPE ARCH PATTERN

PA 1329 P02

| City of Bloomington Utilities Engineering Department | | LOW PRESSURE LATERAL VALVE PIT ASSEMBLY | STANDARD DETAIL NUMBER 23 |
|---|---|---|---|
| NO SCALE REVISED 1/05/09 | Drawing File: I:\COMMON\STANDARD DRAWINGS\STD23.DGN | | |

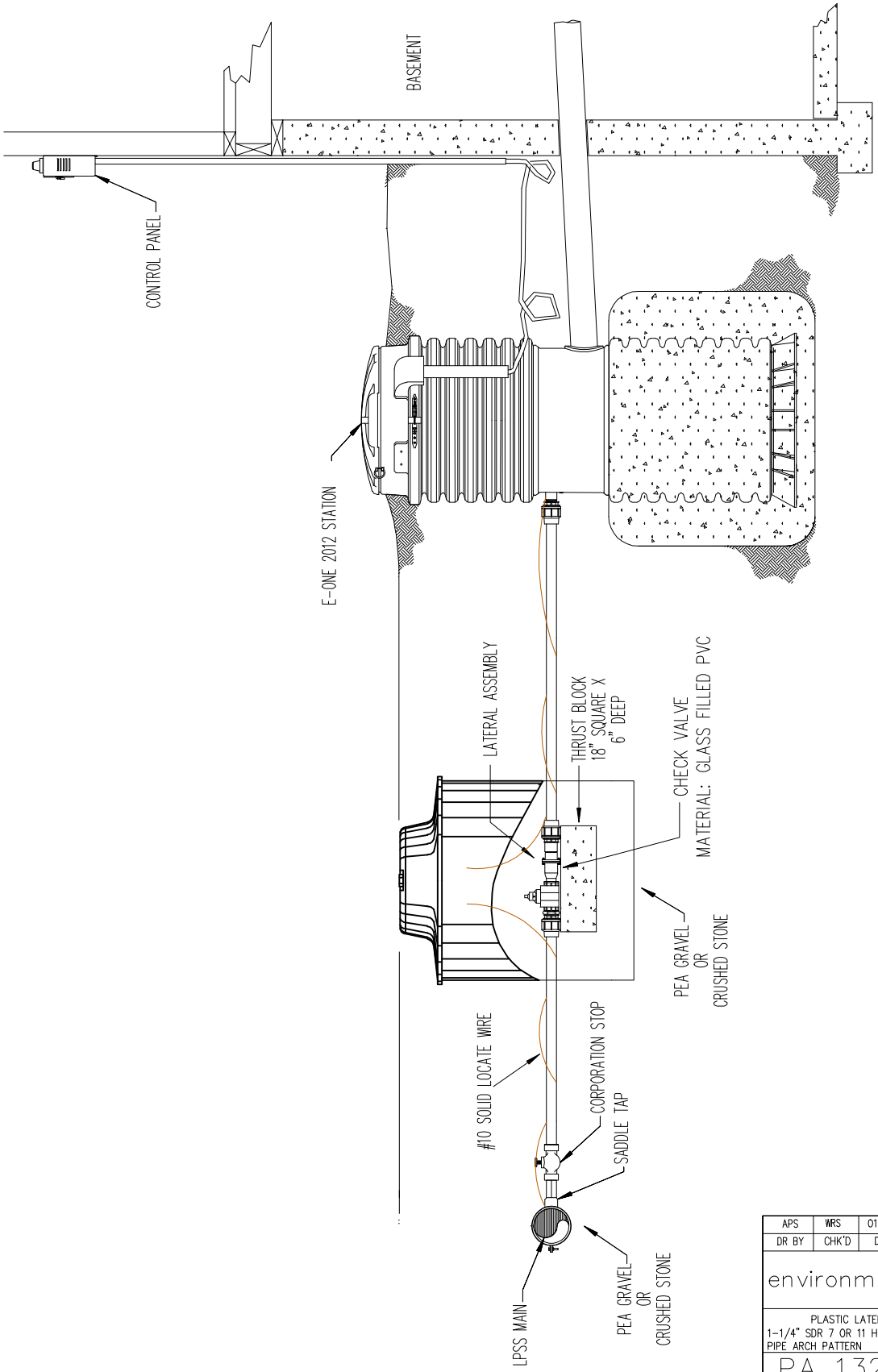


# TYPICAL LATERAL INSTALLATION

LM000114 REV. -

| APS | WRS | 01/06/97 | - | |
|---|---|---|---|---|
| DR BY | CHK'D | DATE | ISSUE | SCALE |

environment one CORPORATION

PLASTIC LATERAL ASSEMBLY
1-1/4" SDR 7 OR 11 HDPE OR SDR 21 PVC
PIPE ARCH PATTERN

PA 1329 P02

| City of Bloomington Utilities Engineering Department | |
|---|---|
| NO SCALE<br>REVISED<br>1/05/09 | Drawing File:<br>I:\COMMON\STANDARD DRAWINGS\STD24.DGN |

TYPICAL LATERAL INSTALLATION

STANDARD DETAIL NUMBER 24

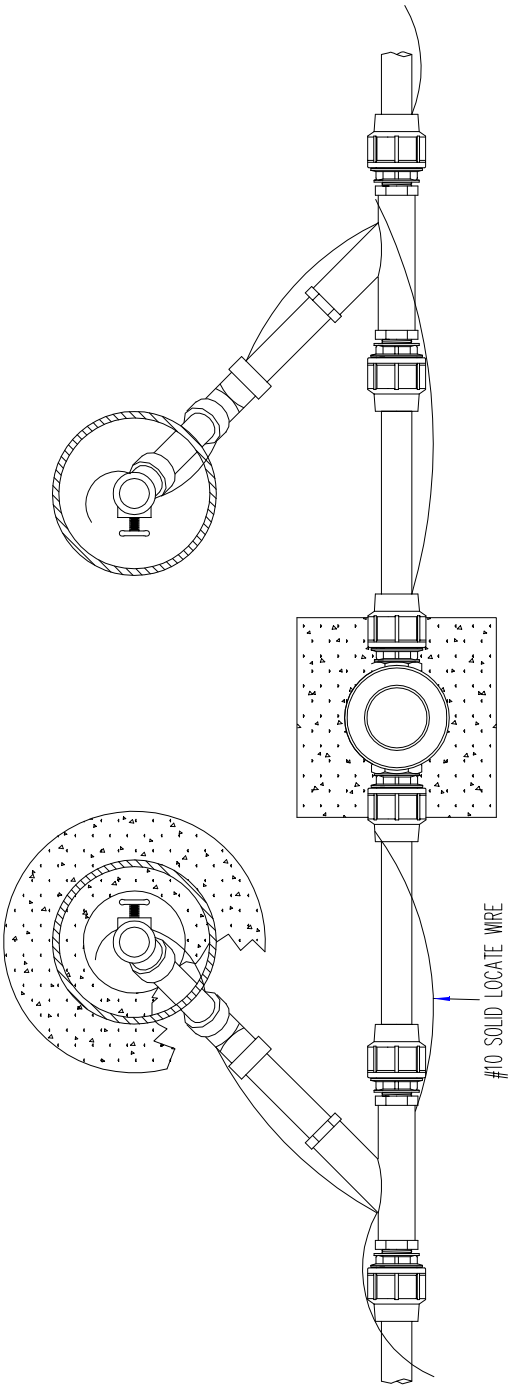


PLAN VIEW

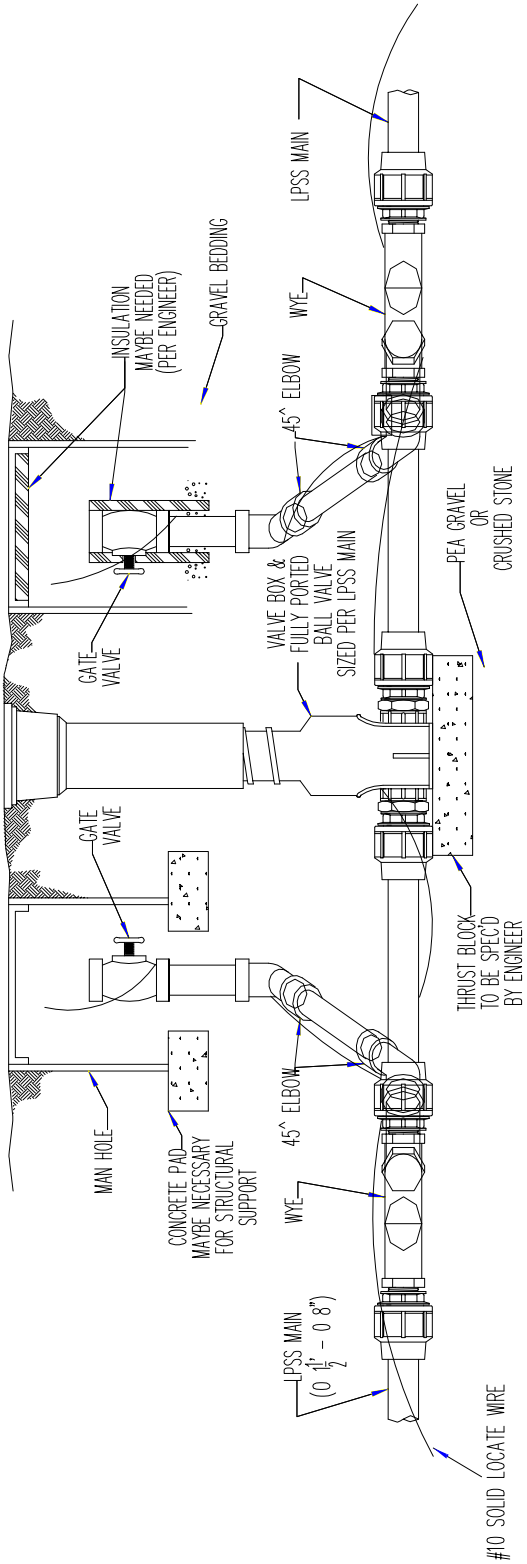


DOUBLE FLUSHING CONNECTION ON LPSS MAIN

| City of Bloomington Utilities Engineering Department | |
|---|---|
| NO SCALE<br>REVISED<br>2/16/11 | Drawing File:<br>I:\COMMON\STANDARD DRAWINGS\STD25.DGN |

DOUBLE FLUSHING CONNECTION ON LPSS MAIN

STANDARD DETAIL NUMBER 25

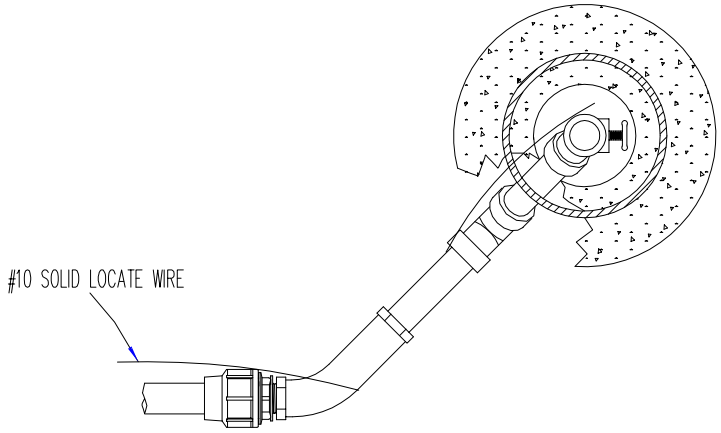


PLAN VIEW

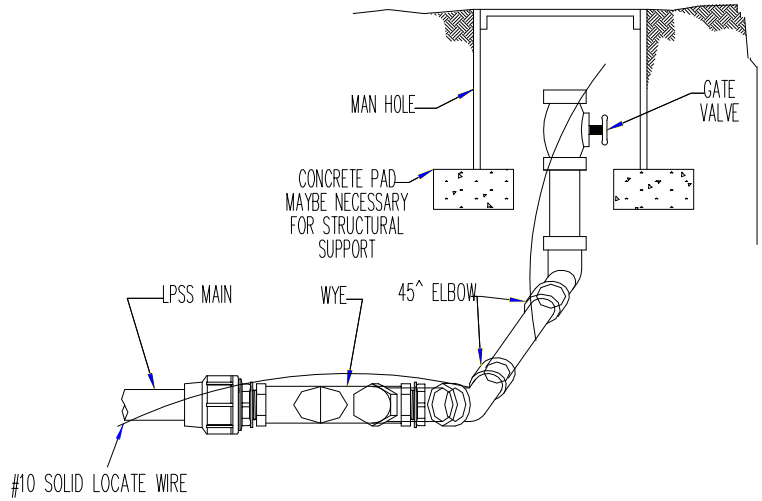


SINGLE FLUSHING CONNECTION ON LPSS MAIN

**City of Bloomington Utilities Engineering Department**

NO SCALE
REVISED
2/16/11

Drawing File:
I:\COMMON\STANDARD DRAWINGS\STD26.DGN

SINGLE FLUSHING CONNECTION ON LPSS MAIN

STANDARD DETAIL NUMBER 26