ORDINANCE 82-6

TO REPEAL AND RE-ENACT TITLE 17 OF THE BLOOMINGTON MUNICIPAL CODE ENTITLED, "CONSTRUCTION REGULATIONS"

WHEREAS, IC 22-11-1-32 requires that all building rules and regulations of local governments be approved by the Administrative Building Council before enactment;

WHEREAS, proposed Title 17.04--17.12 of the Bloomington Municipal Code has been submitted and approved by that body;

NOW, THEREFORE, BE IT HEREBY ORDAINED BY THE COMMON COUNCIL OF THE CITY OF BLOOMINGTON, MONROE COUNTY, INDIANA, THAT:

Section 1. Title 17.04--17.12 entitled "Construction Regulations" is repealed and re-enacted to read as follows:

Title 17

Chapters:

17.04 General
17.08 Administration and Enforcement
17.12 License Requirements and Boards

Chapter 17.04

GENERAL

Sections:

17.04.010 Title
17.04.020 Purpose
17.04.030 Scope
17.04.040 Violations and Penalties
17.04.050 Definitions
17.04.060 Adoption
17.04.070 Jurisdiction
17.04.080 Change in Use
17.04.090 Property Owner Doing Own Work
17.04.100 Appeals and Variances

17.04.010 Title. These regulations shall be known as "Construction Regulations", may be cited as such and will be referred to herein as "this title".

17.04.020 Purpose. The purpose of this title is to provide for the administration and enforcement by the City of the technical codes adopted by the State of Indiana and the City and to provide minimum standards for the protection of life, limb, environment, public safety and welfare, and for the conservation of energy in the design and construction of buildings and residences.

17.04.030 Scope. The provisions of this title shall serve as the administrative, organizational, and enforcement rules and regulations for the technical codes which regulate the site preparation and construction, alteration, moving, demolition, repair, use and occupancy of buildings, structures, building service equipment and systems within the City of Bloomington and its jurisdiction. These rules and regulations shall be supplemental to those adopted by the State Administrative Building Council and other sections of the Municipal Code.

Where these regulations may conflict with State regulations, State regulations shall take precedence. Any provision of this title governing the interpretations of or variance from the provisions of the adopted rules and regulations shall be consistent with those of the Administrative Building Council.

17.04.040 Violations and Penalties. It shall be a violation of this code to fail to comply with regulations set forth in this title. Where specific penalties are not provided, a violator may be subject to the fines provided in the general penalty clause of Section 1.01.130.

17.04.050 Definitions. As used in this title, the following terms have the following meanings and where terms are not defined, they shall have their ordinarily accepted meanings within the context with which they are used.

(a) Board means the Electrical Examination and Registration Board as established by this title.

(b) Building Sewer means the pipe which is connected to the building or house at a point approximately three feet outside the foundation walls of the building and which conveys the building's sanitary sewage discharge from that point to the public sewer.

(c) City Engineer means the City Engineer and his designees.

(d) Commercial, Industrial, Electrical Contractor means one who may undertake electrical construction of multi-family dwellings over two stories, commercial and industrial electrical construction as well as the type of electrical construction permitted residential electrical contractors, in subsection (h), below.

(e) Planning Jurisdiction means the corporate limits of the City of Bloomington and the two-mile fringe as defined by the Plan Commission.

(f) Plumber, Journeyman means a person engaged in the practice of plumbing for hire who is qualified to install plumbing in accordance with the standards and regulations set forth by the State and this jurisdiction.

(g) Plumbing Contractor means a person engaged in the plumbing business for the general public, or who maintains a plumbing shop, and is qualified to install plumbing in accordance with the standards and regulations set forth in this chapter.

(h) Residential Electrical Contractor means one who undertakes electrical construction for single, duplex, and two story or less multi-family dwelling with single-phase service.

(i) Technical codes means the codes, standards, rules and regulations made a part of this title by Section 17.04.060.

17.04.060 Adoption by Reference. The following codes, standards, rules and regulations and amendments thereto as adopted by the State of Indiana are a part of this title as if fully set out herein and shall be kept on file and available for public inspection in the City Clerk's office.

(1) Construction Rules and Regulations, Volume 1, 1980 Edition of the State of Indiana (660 IAC 1-1.1) (3 IR 2148) which identifies, amends and incorporates therein the Uniform Building Code, 1979 Edition, and incorporates therein the Uniform Building Code Standards, 1979 Edition.

(2) Indiana Electrical Rules, 1981 Edition (660 IAC 7) (4 IR 798) which identifies, amends and incorporates therein the National Electrical Code, 1981 Edition.

(3) Indiana Plumbing Rules, 1981 Edition, (660 IAC 9) originally published as 4 IR 2398 which identifies, amends and incorporates therein the Uniform Plumbing Code, 1979 Edition.

(4) Indiana Mechanical Rules, 1981 Edition, (660 IAC 8) originally published as 4 IR 1828 which identifies, amends and incorporates therein the Uniform Mechanical Code, 1979 Edition.

(5) One and Two Family Dwelling Code of Indiana, (660 IAC 3-1) (4 IR 916) which identifies, amends and incorporates therein the One and Two Family Dwelling Code, 1979 Edition.

(6) Indiana Energy Conservation Rules and Regulations for New Building Construction, Volume V, 1979 Edition. (660 IAC 4) (1980 Supp.) published under that title.

(7) Swimming Pool Code (660 IAC 5) (1979) published Indiana Swimming Pool Code, 1978 Edition.

17.04.070 Jurisdiction. This title shall apply to the Planning jurisdiction of the City of Bloomington.

17.04.080 Change in Use. The provisions of this title shall apply to all buildings which are to be devoted to a new use or occupancy for which the requirements of this title, or of the zoning regulations, are in any way more stringent than the requirements covering the previous use of the building.

17.04.090 Property Owner Doing Own Work. No section or provision in this title is to be interpreted as prohibiting a property owner from doing work on a residence which he owns and in which he lives or plans to live. Property for resale is not included in this exemption. Permits are required when work or construction equals or exceeds the scope set forth in this title.

17.04.100 Appeals and Variances. The Board of Zoning Appeals of the City is established as the official hearing board for disputes or variances from the rules and regulations set forth in this title, but it shall not be empowered to grant variances from any of the State technical codes adopted by this title. The City Engineer shall be the final local authority over disputes with regard to the interpretation of the technical codes. Appeals and variances shall be through the State Administrative Building Council in accordance with IC 22-11-1-16 and 22-11-1-21.5

Chapter 17.08

ADMINISTRATION AND ENFORCEMENT

Sections:

17.08.010 Engineering Department
17.08.020 Permits Required
17.08.030 Permit Application
17.08.040 Permit Issuance
17.08.050 Fees
17.08.060 Certificate of Occupancy
17.08.070 Inspections
17.08.080 Special Plumbing Regulations
17.08.090 Special Electrical Regulation

17.08.010 Engineering Department. It shall be the duty of the City Engineer to administer all of the provisions of this title as authorized in IC 22-11-1-10.

(a) Deputies. In accordance with prescribed procedures and with the approval of the appointing authority, the City Engineer may appoint building inspectors, and other related technical officers and inspectors and other employees as shall be authorized from time to time.

(b) Stop Orders. Whenever any work is being done contrary to the provisions of this title, the City Engineer may order the work stopped by notice in writing served on any persons engaged in the doing or causing such work to be done, and any such person shall forthwith stop until authorized by the City Engineer to proceed with the work. It shall be a violation of the ordinances of the City of Bloomington to continue work on any project after a stop work order has been duly issued.

(c) Returning Site to Original Condition. After a stop work order has been issued and/or after a person or firm is denied a permit to continue the work the site or structure must be returned to its original condition.

17.08.020 Scope and Permits Required.

It shall be a violation of this title for any person, firm, or corporation to erect, construct, enlarge, alter, repair, move, improve, remove, convert or demolish any building or structure or make any installation, alteration, repair, replacement or remodel any building service equipment regulated by this title without first obtaining a separate, appropriate permit for each building, structure or building service equipment from the building official.

It shall be a violation of this title for any person to make any connection in any manner with the water or sewage system of the City, or to install any plumbing in any building which connects with the City water or sewage system until a permit has been granted by the City; provided, however, that plumbing permits shall not be required for repairing or replacing a fixture, fitting, faucet or valve by one to be used for the same purpose, for forcing out stoppage, repairing leaks or relieving frozen pipes and fittings. However, when such repairs or alterations include new vertical or horizontal lines of soil, waste or vent pipes, or where their location is changed, a permit is required and the work is subject to inspection by the City building inspector.

(a) Exempted Work. Ordinary repairs and maintenance to buildings may be done without application or notice to the City Engineer but such repairs shall not include the cutting of any wall partition or portion thereof, the removal or cutting of any structural beam or bearing support, or the removal or change of any required means of egress, or rearrangement of parts of a structure affecting the exit requirements; nor, shall ordinary repairs include addition to, alteration of, replacement or relocation of any standpipe, water supply, sewer, drainage, drain leader, gas, soil, waste, vent, or similar piping, electric wiring or mechanical or other work affecting public health or general safety.

(b) Responsibility. It shall be the duty of the property owner to see that all necessary permits as required by this title have been secured from the City Engineer, before any work has been started. Failure of the party responsible for the securing of such permit to do so, shall be subject to a fine as provided in Section 1.01.130 of the Bloomington Municipal Code.

(c) Failure to Obtain Permit. When any person proceeds to do any work or construction covered by this chapter without the required permit, a penalty of three times the applicable permit fee, not to exceed $300, shall be charged. In addition the applicable permit fee shall also be charged.

The payment of this penalty does not release the person in default from any other penalties provided. If the person can prove that failure to obtain a permit was (1) an error made in good faith, (2) resulted in no advantage to him, and (3) that the construction which resulted conformed to all city building and zoning regulations, the city engineer may waive the penalty.

17.08.030 Permit Application. To obtain a permit, the applicant shall first file an application in writing on a form furnished by the City Engineer. Every application shall:

(1) Identify and describe the work to be covered by the permit for which application is made.

(2) Describe the land on which the proposed work is to be done by street address, lot number, addition and/or legal description.

(3) Indicate the use or occupancy for which the proposed work is to be used.

(4) Be accompanied by plans, diagrams, computations and specifications and other data as required in Section 7(a) below.

(5) State the valuation of any new building or structure or any addition, remodeling or alteration to an existing building.

(6) Be signed by the applicant, or his authorized agent, who may be required to submit evidence to indicate such authority.

(7) Give such other data and information as may be required by the City Engineer. Plans, engineering calculations, diagrams and other data shall be submitted in two sets with each application for a permit. The City Engineer may require plans, computations and specifications to be prepared and designed by an engineer or architect licensed by the State to practice as such.

(a) Information Required. Plans and specifications shall be drawn to scale upon substantial paper or cloth and shall be of sufficient clarity to indicate the location, nature and extent of the work proposed and show in detail that it will conform to the provisions of this title.

(b) Exceptions. The City Engineer may waive the submission of plans, calculation, etc., if he finds that the nature of the work applied for is such that reviewing of plans is not necessary to obtain compliance with this code.

(c) Expiration of Plan Review. Applications for which no permit is issued within 180 days following the date of application shall expire by limitation, and plans and other data submitted for review may thereafter be returned to the applicant or destroyed by the City Engineer.

(d) Expiration. Every permit issued by the City Engineer under the provisions of this title shall expire by limitation and become null and void, if the building or work authorized by such permit is not commenced within 360 days from the date of such permit or if the building or work authorized by such permit is suspended or abandoned for a period of 360 days after the work is commenced. Before such work can be recommenced, a new permit shall be first obtained. In order to renew action on a permit after expiration a new application must be made, reviewed, and the current permit fee paid.

(e) Suspension or Revocation. The City Engineer may, in writing, suspend or revoke a permit issued under the provisions of this title whenever the permit is issued in error or on the basis of incorrect information supplied, or in violation of this title. Said revocation shall be effective immediately.

(f) Renewal. A permit may be renewed only one time. Application for renewal must be made at least ten (10) days before the permit's expiration date. The fee for renewal shall be five dollars.

17.08.050 Fees.(a)The fee for each permit shall be as set forth below. The determination of value or valuation under any of the provisions of these codes shall be subject to verification by the City Engineer. The value to be used in computing the building permit fees shall be the total value of all construction work for which the permit is issued as well as all finish work, painting, roofing, electrical, plumbing, heating, air conditioning, elevators, fire extinguishing systems and any other permanent equipment.

(b) The permit fee for any commercial construction undertaken by an owner or contractor who employs a State or International Conference Building Official certified inspector, or a professional engineer registered in the State of Indiana, or a professional architect, holding a certificate of registration from the State of Indiana, shall be reduced by two-thirds under the follcwing conditions:
(1) At the time property owner applies for a building permit, he must make a request for the reduced fee in writing to the City Engineer;
(2) Inspector must furnish evidence to the City Engineer of the current registration of its architect, engineer or inspector;
(3) Owner must agree to furnish the Engineering Department copies of all the inspectors' reports covering all aspects of the project's construction as well as copies of all reports filed with the Administrative Building Council.

(c) The City Engineer shall keep an accurate account of all fees collected under this chapter, and they shall be deposited at least once each week with the City Controller and become part of the general fund of the City.

(d) The fees shall be as follows:

FEE TABLE

PERMIT	DESCRIPTION	FEE
Building	New one and two family (including mobile homes) dwellings based on square footage excluding basement, including all necessary plumbing, heating and electrical. Garages are included in the computation of square footage.	
	Under 1000 square ft.	$ 50
	1000-1499 square ft.	65
	1500-1999 square ft.	80
	2000-2499 square ft.	95
	2500-2999 square ft.	110
	3000-3499 square ft.	125
	3500-3999 square ft.	140
	4000-and Over	155

	Private garage, carports, Accessory buildings	$2/1,000 of cost $15.00 min.
	Industrial, commercial and Multiple Dwellings	$2/1,000 of cost $15.00 min.
	Foundation only	$2/1,000 of cost $20.00 min.
	Enlarge, alter, remove demolish residential or commercial	$2/$1,000 of cost $15.00 min.
	Paving	$2/1.000 of cost $15.00 min.
Electrical	Electrical wiring, rewiring, new service or upgrade in service	$2/1,000 of cost $15.00 min.
Plumbing	Repair or Hook-on to sanitary sewer(plus fee for street excavation if required).	$15.00
	Repair or hook-on to water line	$15.00
	Install, alter, replace or extend plumbing facilities	$2/1,000 of cost $15.00 min.
Excavation	Any work done within City right of way which requires the cutting or altering of any physical feature including sidewalk, curb, payement, and grade	$15.00
Moving	Moving of any building within the City limits (Requires Bond)	$25.00
Wrecking	Demolition of any building	$2/1,000 of cost $15.00 min.
Sign	Any sign erected under the provisions of Chapter 20.17 of this code	$15.00
Occupancy	Change of occupancy under these regulations	$15.00
Grading	Any earth grading under the provision of Title 20	$2/$1,000 of cost $15.00 min.
Renewal Fee		$5.00
Reinspection Fee		$15.00

17.08.060 Certificate of Occupancy.(a) After all inspections when it is found that the building or structure complies with the provisions of the technical codes and the zoning code of the City, the City Engineer shall issue a certificate of occupancy which shall contain the following:

(1) The building permit number;

(2) The address of the building;

(3) The name and address of the owner;

(4) The land use zone;

(5) The use for which occupancy has been approved; and

(6) The name of the building official.

(b) A temporary certificate of occupancy may be issued by the City Engineer for the use of a portion of the building project prior to the completion of the entire project. The City Engineer shall take into consideration seasonal construction limitations and other factors. A committment to complete the project before the expiration of the temporary certificate must be shown by the owner.

17.08.070 Inspections. All construction or work for which a permit is required shall be subject to inspection by the City Engineer. It shall be the duty of the permit applicant to cause the work to be accessible and exposed for inspection purposes. Neither the City Engineer nor this jurisdiction shall be liable for expense entailed in the removal or replacement of any material required to allow inspection.

(a) Inspection Requests. It shall be the duty of the person doing the work authorized by a permit to notify the City Engineer 24 hours prior to the requested inspection that such work is ready for inspection. Such request may be in writing or by telephone at the option of the City Engineer. It shall be the duty of the person requesting any inspections required by this title to provide access to and means for proper inspection of such work.

(b) Approval Required. No work shall be done on any part of the building or structure beyond the point indicated in each successive inspection without first obtaining the approval of the City Engineer. There shall be a final inspection and approval on all buildings, building service equipment and site work when completed and ready for occupancy or use.

(c) Inspection Requirements. Inspections shall be set up on a schedule as provided by the City Engineer. Inspections may be waived by the City Engineer on any construction on which a licensed architect or engineer of the State is responsible. The architect or engineer must certify that the construction is in compliance with all applicable Indiana rules on the design and construction of the project.

(d) Entry. Upon presentation of proper credentials, the City Engineer or his authorized representative may enter at reasonable times any building, structure or premises in the City of Bloomington to perform any duty imposed upon him by this code.

(e) Reinspections. A fee of Fifteen Dollars ($15.00) may be charged for subsequent inspections when an inspection has been requested, but the inspector has been unable to gain entry, or the work is not completed to a stage where inspection is viable or where work is judged incorrect. This fee is payable prior to the issuance of any additional building or occupancy permits.

(f) Notice of Violations. The contractor shall be notified in writing of any defects detected by the field inspector. The contractor shall correct any deficiencies within the time specified by the inspector before proceeding with the building process. If the applicant fails to comply within the specified period he will be offered the opportunity to appear before the inspector, City Engineer and City Attorney to present his case. If this step cannot resolve the issue to the satisfaction of the City Engineer and an appeal is not filed in accordance with chapter 17.04 the City Engineer shall request the City Attorney to initiate legal proceedings for the violation of a City Ordinance per section 1.01.130 of the Municipal Code or for mandatory and injunctive relief which may be joined with action to recover penalties provided for in the Code. Each day's violation constitutes a separate offense.

17.08.080 Special Plumbing Regulations.

(a) Remodeling. All remodeling of existing soil, waste, water lines, vent pipes and drains and change in location of fixtures from existing plumbing shall conform in all respects to the requirements of this title.

(b) Building With No Connection To Sewer System. If water closets or other plumbing fixtures exist in buildings where there is no connection with the City sanitary sewer system evidence of a permit from the County Board of Health must be submitted before any permits can be issued.

(c) Equipment To Be Furnished By Plumber. The equipment, material, power and labor necessary for the inspection and tests required under the provisions of this chapter shall be furnished by the plumber.

(d) Air Pressure Test. All the piping of a plumbing system shall be tested with water or air. After the plumbing fixtures have been set and their traps filled with water the entire drainage system shall be submitted to a final air pressure test if required by the building inspector. The building inspector may require the removal of any cleanouts to ascertain if the pres ure has reached all parts of the system.

(e) Replacing Defects-Reinspection. If an inspection or test required by this code shows defects, such defective work or material shall be replaced within seven (7) days and tests shall be repeated.

(f) Duty of Plumber Before Notifying Inspector. It shall be the duty of the plumber to ensure that the work will stand the test prescribed before giving the notifications required by this title.

(g) Failure of Inspector to Appear--Affidavit of Plumber. If the building inspector fails to appear within forty-eight hours of the time set for each inspection or test, unless the inspector shall in the meantime have rescheduled the inspection, the inspection or test shall be deemed to have been made. The plumber shall then file at the office of the City Engineer an affidavit that the work was installed in accordance with this title, that the required tests have been made and that the plumbing was found free from defects and the system free from leaks and whether the owner or his authorized agent was present when such inspection or test was made or that he was properly notified.

(h) Old Building Sewers. Old building sewers may be used in connection with new buildings only when they are found on examination and test by the City Engineer to meet all requirements of this title.

(i) Building Sewers Specifications. The building sewer shall be cast iron soil pipe, ASTM specification or equal; vitrified clay sewer pipe, ASTM specification or equal; or plastic sewer pipe, schedule 40 or equal; or other suitable material as approved by the City Engineer. Joints shall be tight and water proof. No building sewer shall be located in the same trench nor run parallel to and within ten (10) feet of a water service pipe. When a building sewer must cross a water service pipe, both lines shall be encased with concrete five (5) feet in each direction from the point of crossing. Cast iron pipe with sealed joints may be required by the City Engineer where the building sewer is exposed to damage by tree roots or unstable ground.

(j) Building Sewers-Size and Slope. The size and slope of the building sewers shall be subject to the approval of the City Engineer, but in no event shall the diameter be less than four (4) inches for single family, or six (6) inches for duplex residential units and eight (8) inches for all other uses. The slope of such four (4) inch pipe shall be not less than

one-fourth (¼) inch per foot or sufficient slope to maintain a two (2) feet per second velocity in the sewer.

(k) Building Sewer-Placement. No building sewer shall be laid parallel to or within three (3) feet of any bearing wall which might thereby be weakened. The depth shall be sufficient to afford protection from frost. The building sewer shall be laid at a uniform grade and in straight alignment in so far as possible. Changes in directions shall be made only with properly curved pipes and fittings. Trench details are illustrated in the following diagram:

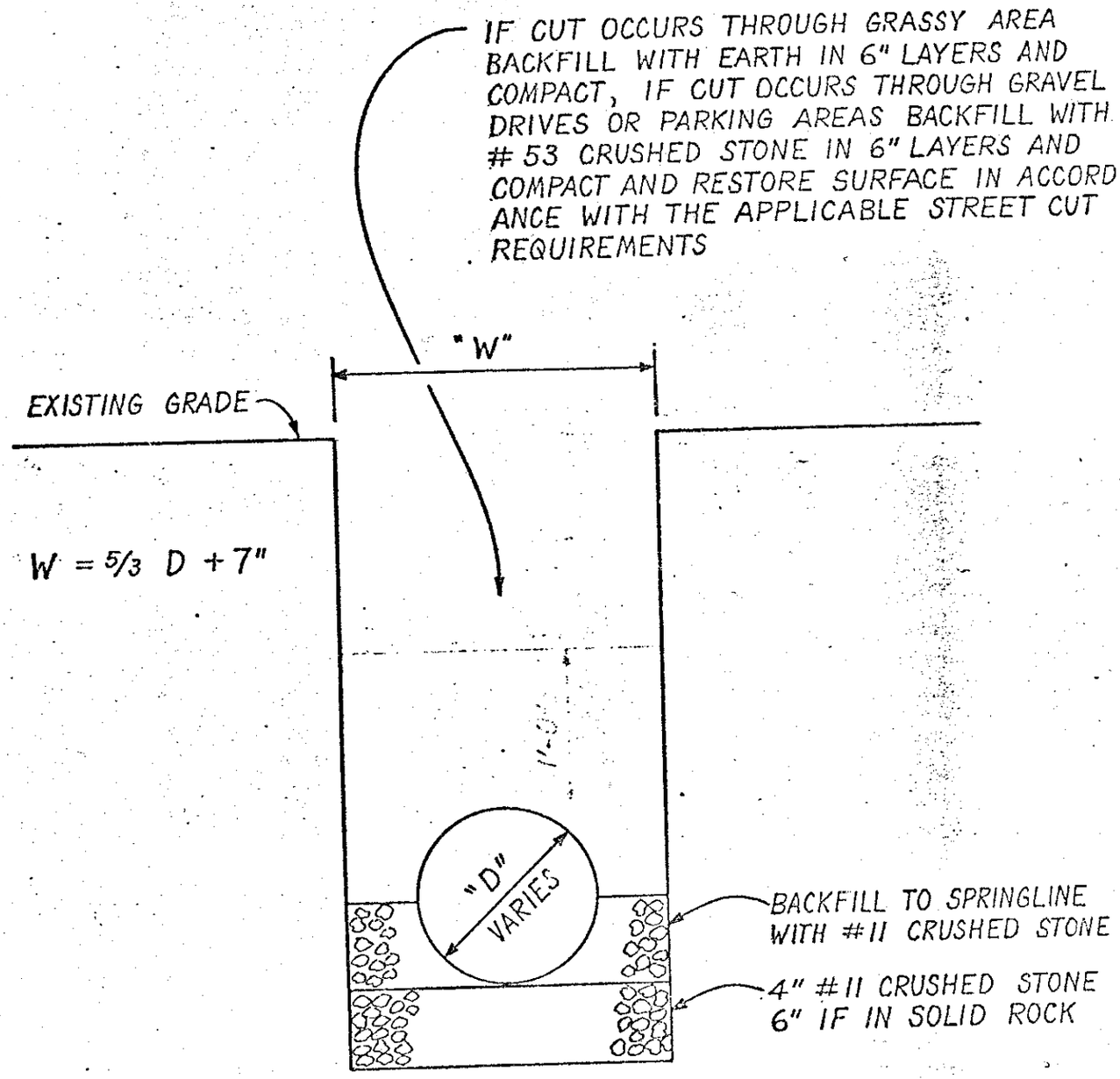

TRENCH BACKFILL DETAIL

NOT TO SCALE

(1) Street Cuts. Street cuts shall be permanently repaired within 24 hours of completion of arterial streets and within five days on all other streets after all subgrade work has been completed. Until subgrade work is completed, temporary repairs to the satisfaction of the City Engineer shall be made to the street daily in order that traffic may proceed across the cut after hours. Street cut repairs shall conform to the following standards: All bituminous street cut repairs shall consist of a minimum of 9 inches of 4000 PSI concrete with a 1.5 inch compacted hot bituminous surface, sealed along all cut edges with a bituminous sealer. All concrete street cut repairs shall consist of 10 inches of 4000 PSI concrete with a broomed finished surface. All brick pavement street cut repairs shall consist of a minimum 6 inch 4000 PSI concrete base with the original or similar paving bricks placed on and bonded to the concrete with an all-weather adhesive material. The joints between the paving bricks shall be filled by brushing dry portland cement into the joints and wetted. The Engineering Department shall be notified 24 hours in advance of placement of a permanent patch so that an inspector may be present at the time of its placement. Any settlement that occurs within one year of completion of the cut shall be repaired to the satisfaction of the City Engineer at the applicant's expense. Failure to repair shall result in suit being filed against the contractor's bond.

City Standard for Street Repairs

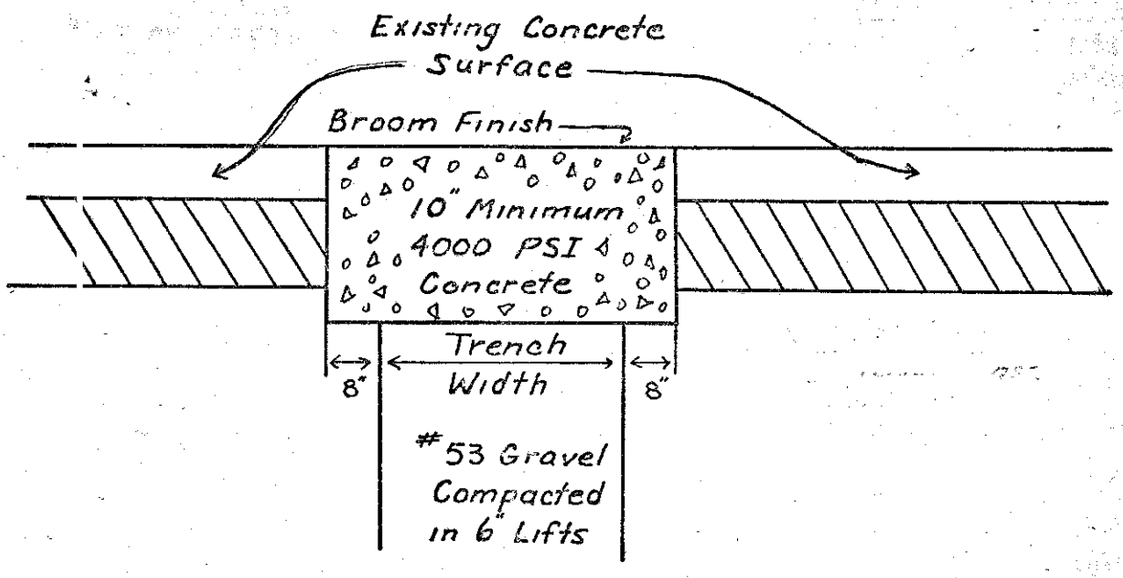

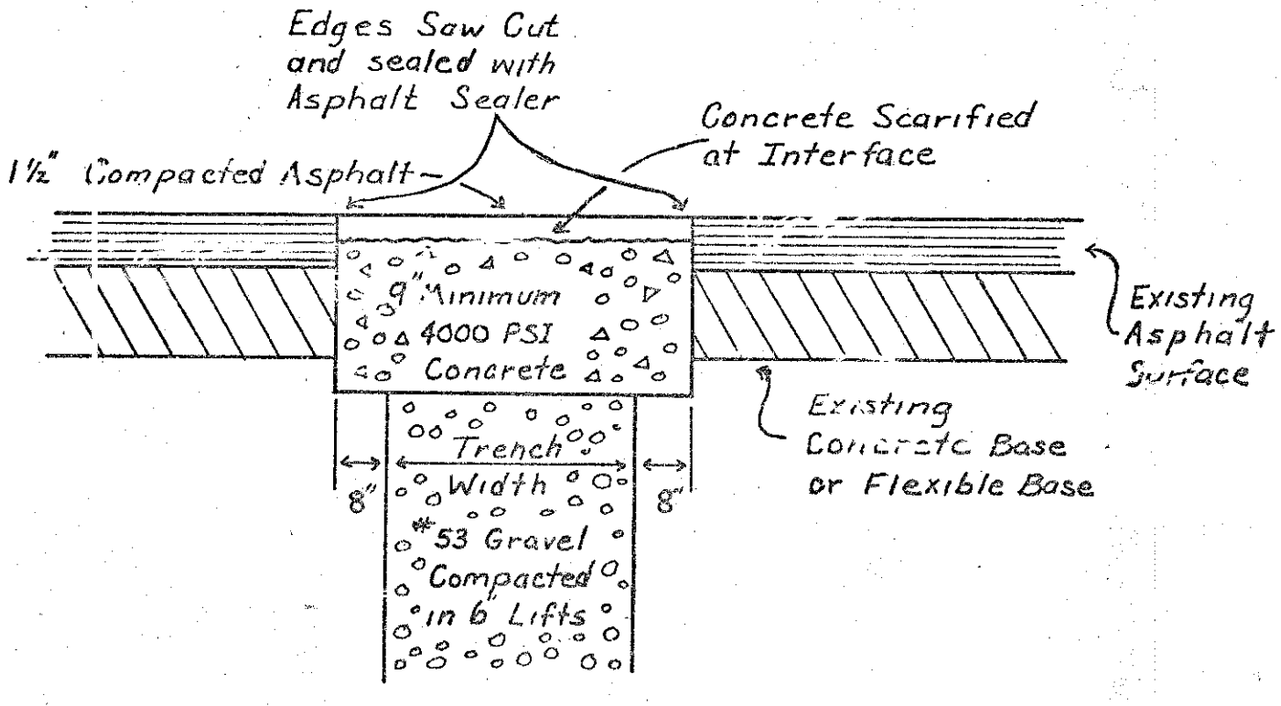

(m) Building Sewer-Elevation. All buildings must have two feet of vertical drop between the lowest finish floor elevation of the building and the invert elevation of the public sewer at the point of hook on. If two feet cannot be provided, sanitary sewage shall be lifted by approved artificial means and discharged to the building sewer in such a manner that will provide 2 feet of drop between the highest part of the building sewer and the invert of the public sewer. No water-operated sewage ejector shall be used.

(n) Building Sewer-Joints. All joints in vitrified clay pipe shall be made with ASTM C425 type joints. Joints between clay pipe of other materials shall be made with approved adapter fittings or prefabricated elastometric sealing rings or sleeves. No paint, varnish or other coatings shall be permitted on the jointing material until after the joint has been tested and approved. Approved joints or prefabricated elastromeric seal or sleeves may also be used.

(o) Building Sewer-Connection. The connection of the building sewer into the public sewer shall be made at the "Y" branch, if such branch is available at a suitable location. If the public sewer does not have a properly located "Y" branch, the owner shall at his expense install an approved tapping saddle in the public sewer at the location specified by the City Engineer. The tapping saddle shall be installed in a neatly tapped hole cut into the public sewer and said connection between the tapping saddle and public sewer shall be secured by the use of epoxy compound. The centerline of the building sewer at the tapping saddle shall be at or above the centerline of the public sewer. A smooth, neat joint shall be made, and the connection made secure and watertight. Special fittings may be used for the connection only when approved by the City Engineer.

17.08.090 Special Electrical Regulation. No person, firm, association or corporation shall furnish any electric current to any building hereafter wired for electricity within this jurisdiction, until it has been furnished with a certificate signed by the electrical inspector showing that such work conforms to this title.

Chapter 17.12

LICENSE REQUIREMENTS AND BOARDS

Sections:

17.12.010 Electrical Examination and Registration Board
17.12.020 Board Members Removed for Cause
17.12.030 Board-Quorum
17.12.040 Board-Records
17.12.050 Electric License Required
17.12.060 Electric License Classifications
17.12.070 Electric License Reciprocity
17.12.080 Electric License Examination Required
17.12.090 Electric License Re-examination
17.12.100 Electric License Examination Notice of Time and Place
17.12.110 Electric License Expiration Renewal
17.12.120 Electric License Disposition of Fees
17.12.130 Exceptions to Electric Licensing Requirements
17.12.140 Suspension of Electric License-Appeal
17.12.150 Plumbing Registration
17.12.160 Plumbing Contractors
17.12.170 Journeymen Plumbers

17.12.010 Electrical Examination and Registration Board. The Board shall be responsible for the examination, registration and licensing of electrical contractors in this jurisdiction. The Board shall consist of the following persons: the City Engineer and four other members who shall be appointed by the Mayor, who shall serve one year from the

time of their appointment, one of whom shall be an electrical contractor, one of whom shall be an architect, one of whom shall be a professional engineer, and one of whom shall be a disinterested citizen. The Board shall, as soon as possible after its appointment, meet and choose a chairperson. The City Engineer shall serve without additional compensation. The appointive members of such Board shall each receive five dollars for each session wherein examinations or hearings are conducted.

17.12.020 Board Members Removed For Cause. Board members may be removed for cause. "Cause" shall include, but not be limited to, failure to attend three consecutive regularly scheduled meetings of the Board in any twelve-month period. Provided that any Board member may submit in writing to the Mayor any extenuating circumstances. Such written submission must be made before the formal decision to remove is reached. Acceptance of extenuating factors by the Mayor puts the Board member on notice that further excessive absenteeism will result in removal.

17.12.030 Board-Quorum. Three members shall constitute a quorum, and a majority of a quorum must concur in all decisions, except in all cases of license revocation or rule changes at which time a majority of the Board must concur.

17.12.040 Board-Records. The Board shall keep a record of all applications for registration and record of its proceedings, whether each applicant was registered or rejected, and the date of such action by the Board.

17.12.050 Electric License Required. It is unlawful for any person to engage in the electrical contracting business or to work as an electrical contractor within this jurisdiction without having first obtained a license to do so in the manner provided in this chapter.

17.12.060 Electric License Classifications. There shall be two types of electrical contracting licenses and any person desiring to qualify and obtain a license to engage in the business as an electrical contractor shall pay to the controller of the City the following sums as registration fees:

(a) Residential electrical contractor. A registration fee of thirty-five dollars shall be assessed for registration and examination with an additional fee of fifty dollars for license issuance. Annual renewal fees will be fifty dollars payable January 1st and nonrenewable after January 31st.

(b) Commercial, industrial electrical contractor. A registration fee of fifty dollars shall be assessed for registration and examination with an additional fee of one hundred dollars for license issuance. Annual renewal fees will be one hundred dollars payable January 1st and nonrenewable after January 31st.

17.12.070 Electric License-Reciprocity. The Board may establish a reciprocity agreement with any other municipality or other government body for exemption from the examination requirements. License applications of this basis shall be accompanied by the appropriate registration fee and, upon Board approval of such registration, and the applicable license fee shall also be paid prior to issuing the license.

17.12.080 Electric License-Examination Required. Any person desiring to be licensed to perform electrical work or to engage in the business of electrical contractor within this jurisdiction shall be required to pass an examination before the Board. Such examination shall evaluate the applicant's ability, experience, training, and fitness to engage in such work. Upon successfully passing the examination and the payment of fees as appropriate, the applicant

shall be issued a license by the City Controller pursuant to the order directing theissuance of such license by the Board.

17.12.090 Electric LicenseRe-examination. In the event an applicant fails to pass the examination given by the Board, such applicant may, after sixty days have elapsed from the date of filing the original application, file a second application and upon the payment of fees, shall be given a second examination by the Board.

17.12.100 Electric License-Examination-Notice of Time and Place. All applicants for electrical contractor licenses may take the examination, upon seventeen day's notice to the electrical inspector, at the time and place designated by the electrical inspector.

17.12.110 Electric License-Expiration-Renewal. All licenses issued under the terms of this chapter shall expire on the thirty-first day of December in the year for which the same was issued. No license shall be issued for a longer period than one calendar year, but a license may be renewed without re-examination as hereinafter provided. No license holder shall be entitled to renew his license without examination unless he files an application in due form, with proper fee, for such renewal, not later than thirty days after the expiration of his latest license, in the office of the City Engineer, but if the application is so filed and the fee is so paid within thirty days from the expiration date of the latest license, then such renewal shall be granted without examination. No license shall be transferable to any other person, firm, corporation, or partnership.

17.12.120 Electric License-Disposition of Fees. All fees for registration and for electrical contractor license shall be deposited in and become a part of the City general fund.

17.12.130 Exceptions To Electric Licensing Requirements.(a) All electrical installation within this jurisdiction shall be made by an electrical contractor licensed under the provisions of this chapter but nothing in this chapter shall be construed as prohibiting an owner of a single family residence from making normal electrical installation for his own residence.

(b) The licensing provisions of this chapter shall not apply to any person or the employees of any firm when such person or firm is not related to the business of electrical contracting, but employs personnel and maintains an electrical service department to perform electrical service work to repair electric wiring upon his or its own property.

17.12.140 Suspension of Electric License-Appeal. The Mayor of the City is authorized to suspend for any determinate period the license of any electrical contractor issued under the provisions of this chapter. All such suspensions by the Mayor shall be made after recommendation by the Board and upon a hearing by the Mayor. Such recommendations shall be in writing and shall set forth specifically the reasons for such action by the Board. Any person aggrieved by the action of the Mayor in suspending any license under this chapter may appeal to the circuit or superior court of Monroe County by filing therein, within ten (10) days after the action of the Mayor, his complaint against the City and the Board setting forth in such complaint the action of the Mayor complained of and specifying in what way such action by the Mayor is wrongful.

17.12.150 Plumbing Registration. It is unlawful for any person to engage in the plumbing business or practice of plumbing, either as a plumbing contractor or journeyman plumber within this jurisdiction, unless such person has been duly registered as a plumbing contractor or journeyman plumber under the terms and provisions of this chapter.

17.12.160 Plumbing Contractors. Any person desiring to be registered as a plumbing contractor must first show evidence of being licensed with the State of Indiana. Upon presentation of such evidence and registration fee of fifty dollars the City Controller shall register such person as a registered plumbing contractor for the remainder of the calendar year, and assign to such contractor a registration number. Registration expires on December 31st of each year.

17.12.170 Journeymen Plumbers. Any person desiring to be a journeyman plumber in this jurisdiction must first show evidence of being licensed with the State of Indiana. Upon presentation of such evidence and a registration fee of fifteen dollars the City Controller shall register such person as a journeyman plumber for the remainder of the calendar year, and assign a number until such time as his registration is allowed to lapse. His registration shall be continued from year to year upon proof of a State License and payment of the annual registration fee.

Section 2. The enactment of this ordinance does not affect any rights or liabilities accrued, penalties incurred, or proceedings begun before the effective date of this ordinance. The rights, liabilities, and proceedings are continued, and penalties shall be imposed and enforced under prior ordinances as if this ordinance had not been enacted. All offenses committed before the effective date of this ordinance shall be prosecuted and remain punishable under prior ordinances as if this ordinance has not been enacted.

Section 3. Severability. If any provision of this ordinance or the application thereof to any person or circumstance is held invalid, the invalidity does not affect other provisions or applications of this ordinance which can be given effect without the invalid provision or application, and to this end the provisions of this ordinance are severable.

Section 4. This ordinance shall be in full force and effect from and after its approval by the Administrative Building Council of Indiana, passage by the Common Council, and approval by the Mayor, and promulgation required by law.

PASSED AND ADOPTED by the Common Council of the City of Bloomington, Monroe County, Indiana, upon this 3rd day of March, 1982.

Patrick J. Murphy

Patrick J. Murphy, President
Bloomington Common Council

ATTEST:

Patricia Williams

Patricia Williams, City Clerk

PRESENTED by me to the Mayor of the City of Bloomington upon this 5th day of March, 1982.

Patricia Williams

Patricia Williams, City Clerk

SIGNED and APPROVED by me upon this 5 day of March, 1982.

Francis X. McCloskey

Francis X. McCloskey, Mayor
City of Bloomington

ENDORSEMENT:

Approved this 15th day of December 1981 by the Administrative Building Council to the State of Indiana.

Boyd W. Phelps

Chairman

Secretary

SYNOPSIS

This ordinance re-enacts previous construction regulations to meet the State's requirement for approval of building regulations by the Administrative Building Council. The fee schedule and the adoptions by reference have been updated. Exemptions from the permit fees have been deleted and a provision for reduced fees under certain circumstances has been added.