UTILITIES

Sewer & Water:	Bloomington Utilities 600 E. Miller Dr., PO Box 1216 Bloomington, IN 47402 Contact: Jane Fleig, P.E. (812) 349-3631 fleigj@bloomington.in.gov	Telephone:	Smithville Communications, Inc. 1600 W. Temperance St. Elletsville, IN 47429 Contact: Jack Hillenberg (812) 876-9103 jackh@smithville.net
Cable:	Comcast Cable Communications 1600 West Vernal Pike Bloomington, IN 47404 Contact: Scott Templeton (812) 822-3262 scott_templeton@cable.comcast.com	Gas:	Vectren - Distribution 1 N. Main St. Evansville, IN 47711 Contact: Doug Anderson (812) 330-4009 danderson@vectren.com
Cable:	AT&T 4517 E. Indiana Bell Court Bloomington, IN 47408 Contact: Brent McCabe (812) 334-4521 bm1792@att.com	Electric:	Duke Energy 4535 Jane Blvd. New Castle, Indiana 47362 Contact: Carl Gideon (317) 727-2007 carl.gideon@duke-energy.com

Utility Note:

1. Pre-Construction Meeting:
   All projects will require a pre-construction meeting with the City of Bloomington Utilities prior to the start of construction. The contractor and/or developer must contact the Utilities Technician at (812) 349-3633 to schedule the meeting.

2. Utilities Inspection:
   Contractor shall notify the City of Bloomington Utilities Engineering Department one (1) working day prior to construction of any water, storm or sanitary sewer utility work. A CBU inspector must have notice so work can be inspected, documented, and a proper as-built made. When a contractor works on weekends, a CBU designated holiday, or beyond normal CBU work hours, the contractor will pay for the inspector's overtime. For CBU work hours and holiday information, please contact the City of Bloomington Utilities Engineering Department at (812) 349-3660.

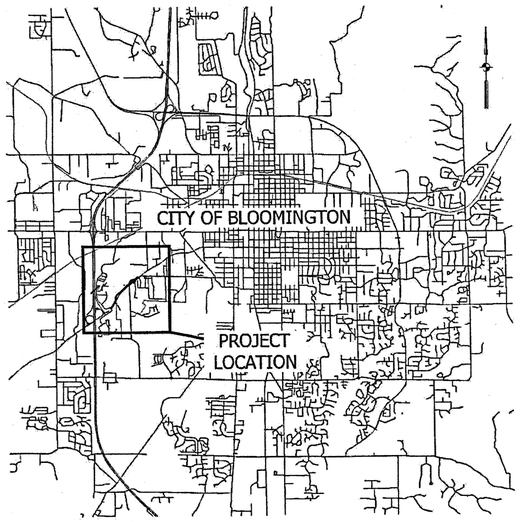

LOCATION MAP

SCALE: 1"=5,000'

THE CITY OF
BLOOMINGTON

PATH, INTERSECTION AND SIGNAL IMPROVEMENT

LATITUDE 39°09'15"
LONGITUDE 86°33'52"

THE PROJECT INCLUDES THE CONSTRUCTION OF A PATH ALONG THE NORTH SIDE OF W. BLOOMFIELD ROAD FROM S. BASSWOOD DRIVE TO S. SHADELAND DRIVE, & IMPROVEMENTS INCLUDING SIGNALIZATION OF THE INTERSECTION OF W. BLOOMFIELD ROAD AND ROLLING RIDGE WAY. ALL LOCATED IN SECTIONS 6 & 7, T8N, R1W IN PERRY TOWNSHIP, MONROE COUNTY, INDIANA

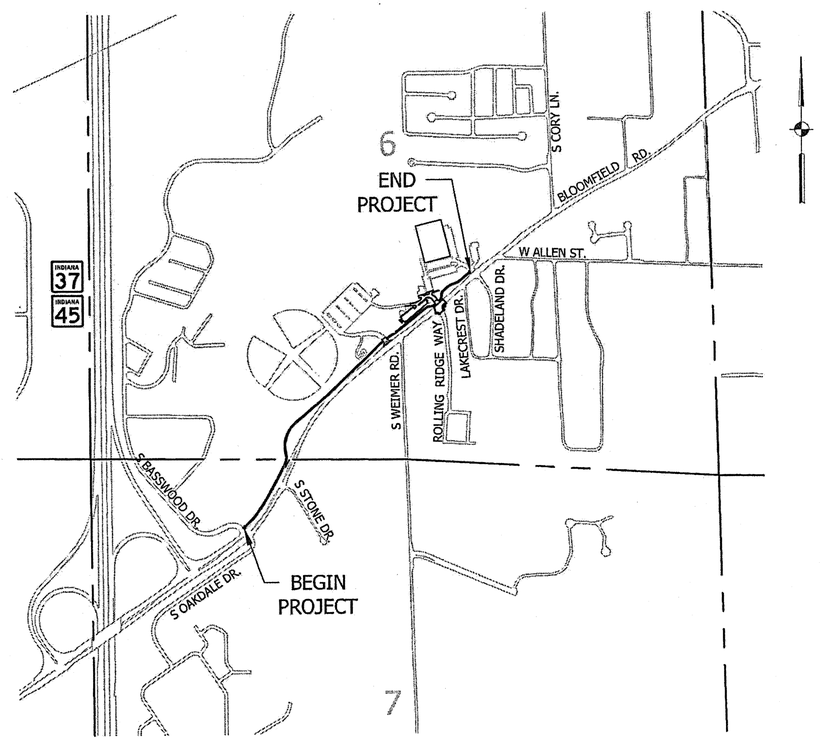

PROJECT MAP

SCALE: 1"=600'

INDEX

SHEET NO.	DESCRIPTION
1	TITLE SHEET
2	TYPICAL CROSS SECTIONS
3	SURVEY CONTROL
4-8	PLAN & PROFILE LINE "PATH"
9	UTILITY VAULT CAP DETAIL
10-11	GRADING PLAN PARKING LOT
12	STONE ARCH STRUCTURE RECONSTRUCTION DETAILS
13	PAVEMENT MARKING & SIGNING PLAN
14	SIGNAL PLANS
15	MISCELLANEOUS TABLES
16-22	CROSS SECTIONS LINE "PATH"

SURVEY LEGEND

	Light Pole		Telephone Manhole
	Road Sign		Telephone Pedestal
	Gas Valve		Electric Manhole
GM	Gas Meter		Power Pole
	Catch Basin		Guy Anchor Pole
	Storm Water Manhole		Guy Anchor
	Fire Hydrant	W	Underground Water Line
	Water Valve	T	Underground Telephone Line
	Water Meter	UGE	Underground Electric Line
	Sanitary Manhole	G	Underground Gas Line
	Sanitary Cleanout	AE/T	Overhead Utility Line
	Water Spigot	FOT	Underground Fiberoptic Line
	Tree/Shrub		

APPROVED BY:
THE CITY OF BLOOMINGTON

Mark Kruzan, Mayor — Date: 5/19/15

Charlotte Zietlow, President, Board Of Public Works — Date: 5/15/2015

Andrew Cibor, Transportation & Traffic Engineer — Date:

[INDIANA DEPARTMENT OF TRANSPORTATION STANDARD SPECIFICATIONS DATED 2014 TO BE USED WITH THESE PLANS]

UNITED Consulting
1625 N. Post Road
Indianapolis, IN 46219
Phone 317-895-2585
Fax 317-895-2596
www.ucindy.com

PLANS PREPARED BY: UNITED CONSULTING (317) 895-2585 PHONE NUMBER

CERTIFIED BY: Michael A. Rowe — June 1, 2015 DATE

MICHAEL A. ROWE REGISTERED No. 10001062 STATE OF INDIANA PROFESSIONAL ENGINEER

DESIGNATION
-

SHEETS		
1	of	22

CONTRACT	PROJECT
-	-

File Name: P:\CIVIL\12-409\Sheet\Drawings\Plans Intersection\Title Sheet.dwg Plot Date: 5/19/2015 Reload By: Curtis, Bill

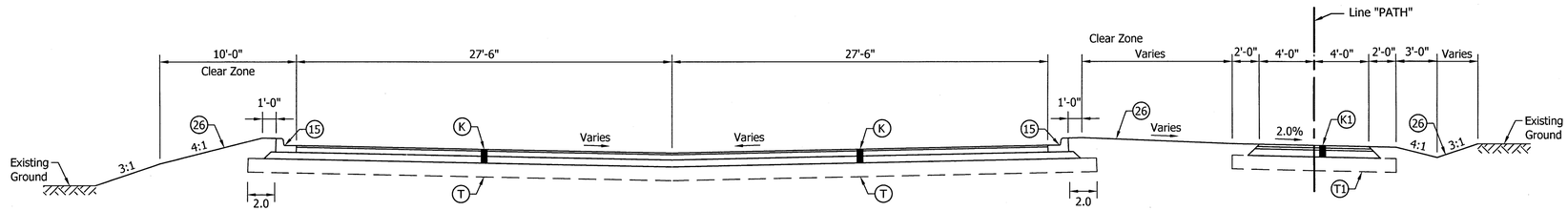

TYPICAL SECTION - PARKING LOT (PARKING ON TWO SIDES)

Not To Scale

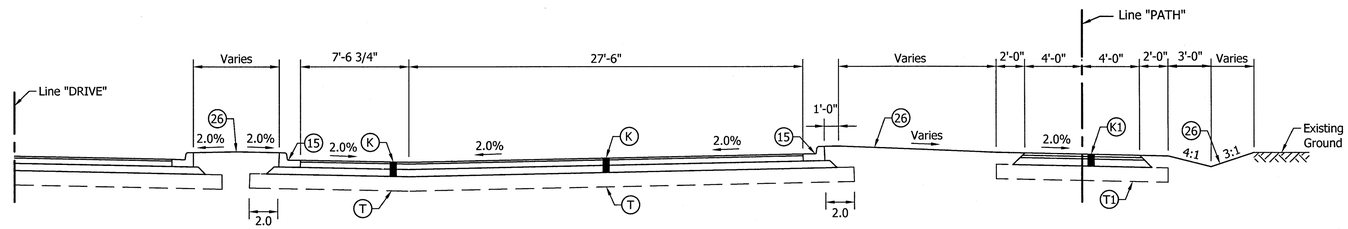

TYPICAL SECTION - PARKING LOT (PARKING ON ONE SIDE)

Not To Scale

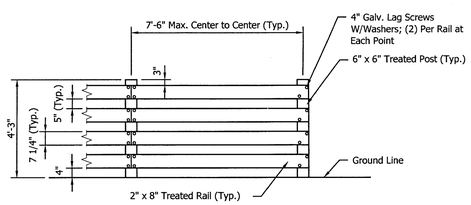

ELEVATION

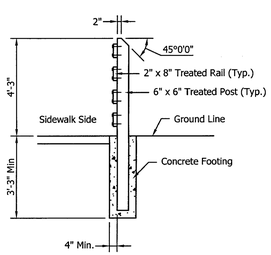

TYPICAL POST

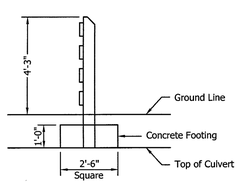

POST OVER CULVERT

PEDESTRIAN FENCE RAIL, WOOD

Not To Scale

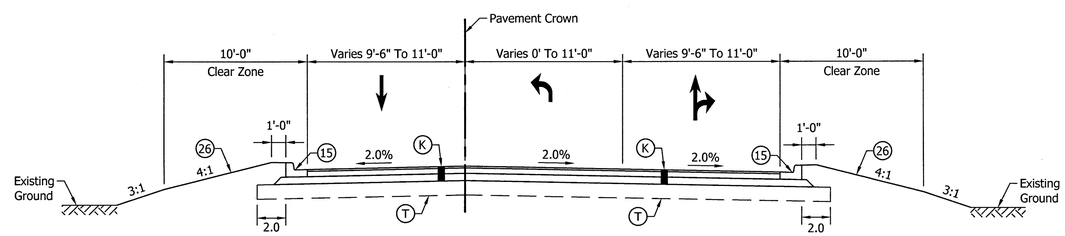

TYPICAL SECTION - LINE "DRIVE"

Not To Scale

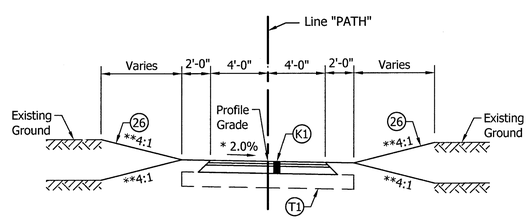

TYPICAL SECTION - LINE "PATH"

Not To Scale
From 10+00.00 To 39+71.00 "PATH"

* Note: Path Slope Direction Varies, See Cross Sections

** Note: 3:1 Rt/Lt, Sta. 17+25 to 21+75
2:1 Rt, 3:1 Lt, Sta. 21+75 to 24+75

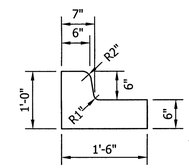

15

CURB & GUTTER, CONCRETE, MODIFIED

NOT TO SCALE

LEGEND

- (K) HMA for Approaches
  165 #/Sys HMA Surface Type B on
  275 #/Sys HMA Intermediate Type B on
  6" Compacted Aggregate, No. 53, Base
- (K1) HMA for Sidewalk
  140 #/Sys HMA Surface Type A on
  220 #/Sys HMA Intermediate Type A on
  6" Compacted Aggregate, No. 53, Base
- (T) Subgrade Treatment, IB
- (T1) Subgrade Treatment, Type III
- (15) Curb & Gutter, Concrete, Modified
- (26) Nursery Sodding

UNITED Consulting
1625 N. Post Road
Indianapolis, IN 46219
Phone 317-895-2585
Fax 317-895-2596
www.ucindy.com

WILLIAM CURTIS REGISTERED No. PE10505665 STATE OF INDIANA PROFESSIONAL ENGINEER

RECOMMENDED FOR APPROVAL — DESIGN ENGINEER — DATE 6/1/15

DESIGNED: JRS | DRAWN: JNII
CHECKED: JAR | CHECKED: JRS

THE CITY OF BLOOMINGTON
PATH, INT & SIGNAL IMPROVEMENTS

TYPICAL CROSS SECTIONS

HORIZONTAL SCALE	BRIDGE FILE
AS SHOWN	-
VERTICAL SCALE	DESIGNATION
AS SHOWN	-
SURVEY BOOK	SHEETS
-	2 of 22
CONTRACT	PROJECT
-	-

File Name: p:\C3D\12-405\Road\Dwg\Plans Intersection\Typical Section.dwg Plot Date: 5/29/2015 Plotted By: Nimz, John

7	NORTHING 525031.254 EASTING 1274073.874

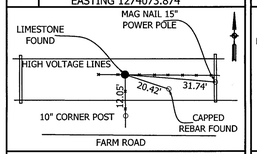

SE COR. SEC.6 T.8N., R.1W.

8	NORTHING 525202.590 EASTING 1268790.825

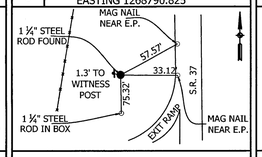

SE COR. SEC.6 T.8N., R.1W.

27	NORTHING 524425.338 EASTING 1269926.160

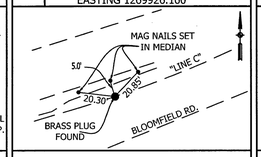

P.C. 75+70.41 "C"

52	NORTHING 525157.109 EASTING 1270478.492

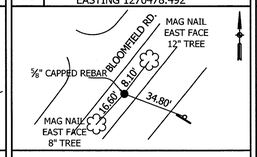

P.O.T. 85+00.00 "C"

53	NORTHING 525338.144 EASTING 1270571.852

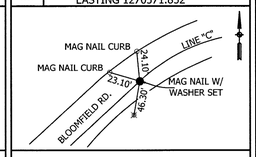

P.C. 87+03.69 "C"

54	NORTHING 525349.337 EASTING 1270568.611

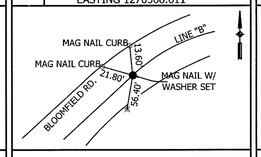

P.C. 1335+73.70 "B"

55	NORTHING 525648.543 EASTING 1270726.361

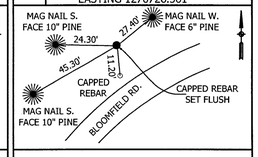

P.I. 1339+11.94 "B"

56	NORTHING 525637.352 EASTING 1270726.152

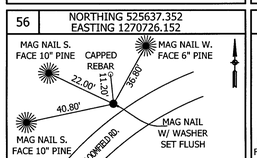

P.I. 90+40.34 "C"

57	NORTHING 525587.087 EASTING 1270731.740

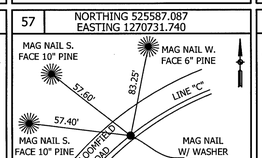

P.O.C. 90+00.00 "C"

58	NORTHING 525696.447 EASTING 1270814.012

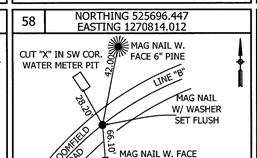

P.O.C. 1340+00.00 "B"

59	NORTHING 525846.501 EASTING 1270989.953

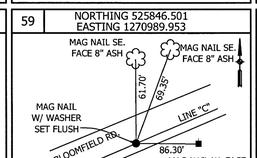

P.T. 93+66.86 "C"

60	NORTHING 525860.727 EASTING 1270989.774

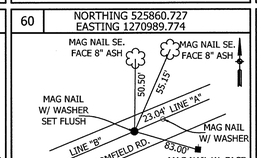

P.T. 1342+40.80 "B"
= P.O.T. 1342+76.96 "A"

61	NORTHING 525991.342 EASTING 1271172.641

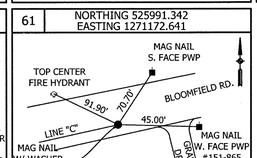

P.O.T. 96+00.00 "C"

62	NORTHING 525875.179 EASTING 1271007.716

P.I. 1343+00.00 "A"

63	NORTHING 526066.576 EASTING 1271238.729

P.I. 1346+00.00 "A"

64	NORTHING 526085.069 EASTING 1271262.352

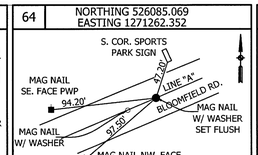

P.C. 1346+30.00 "A"

65	NORTHING 526205.455 EASTING 1271414.802

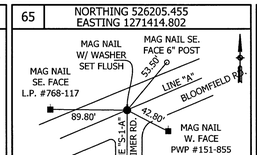

P.O.C. 1348+24.25 "A"
= P.O.T. 20+25.60 "S-1-A"

66	NORTHING 526315.484 EASTING 1271551.846

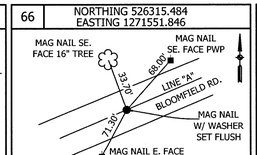

P.O.C. 1350+00.00 "A"

67	NORTHING 526393.323 EASTING 1271656.126

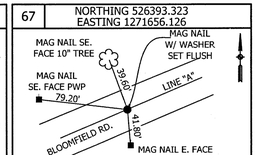

P.I. 1351+30.08 "A"

68	NORTHING 526634.220 EASTING 1271937.070

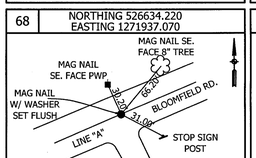

P.O.C. 1355+00.00 "A"

69	NORTHING 526315.484 EASTING 1271551.846

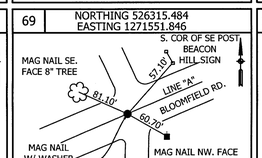

P.T. 1356+30.00 "A"

106	NORTHING 527789.436 EASTING 1271369.709

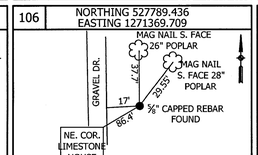

CENTER SECTION SEC. 6 T.8N. R.1W.

107	NORTHING 525180.267 EASTING 1271443.986

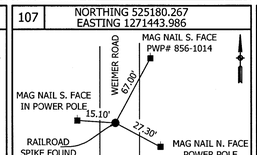

S. QTR. COR. SEC.6 T.8N., R.1W.

1393	NORTHING 519765.095 EASTING 1271566.205

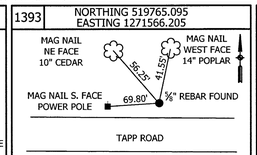

S. QTR. COR. SEC. 7 T.8N. R.1W.

10032	NORTHING 524896.022 EASTING 1270343.850

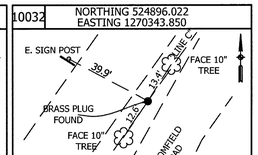

P.T. 82+06.24 "C"

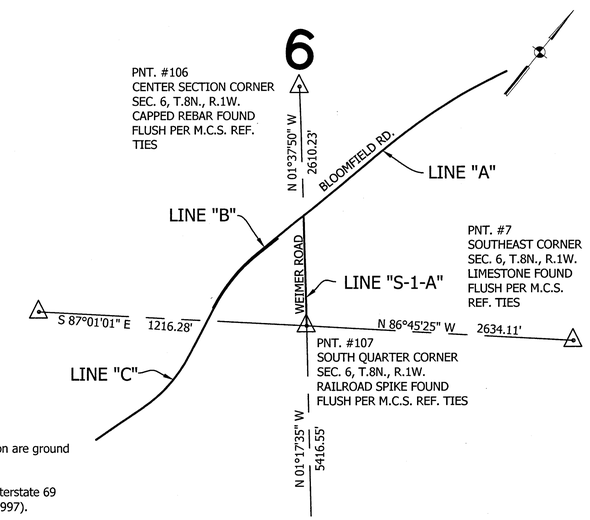

SECTION DETAIL
1"=1,000'

NOTES

1. All distances and/or coordinates shown hereon are ground distances/coordinates.
2. The basis of bearings for the survey is the Interstate 69 Coordinate System East Zone (N.A.D. 1983(1997).
3. All "capped rebar set" are 5/8" rebar with yellow plastic cap stamped "UNITED FIRM #0022" set unless otherwise noted.
4. All "Mag Nail w/washer set" are Mag Nails with a washer stamped "UNITED FIRM #0022" set unless otherwise noted.
5. The alignments of Line "A" and Line "B" were recreated from plans from Indiana State Highway Commission Federal Project 134 dated January 4, 1929. The geometry of the alignment from the plans did not match roadway and therefore two additional deflections were added which created the equation from Line "A" to Line "B".
6. The alignment of Line "C" was recreated from plans Indiana Department of Highways Project No. F-095-7 (4) dated June 20, 1988.

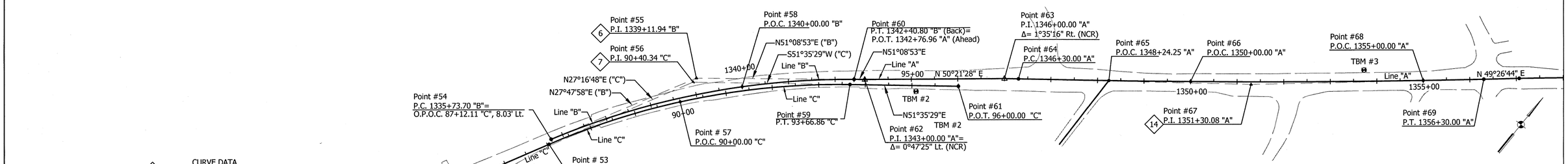

CURVE DATA
P.I. Sta 78+95.10 Line "C"
Δ = 28°36'44" Lt.
R = 1273.24'
T = 324.69'
L = 635.83'
E = 40.75'
SE= EXISTING

CURVE DATA
P.I. Sta 1339+11.94 Line "B"
Δ = 23°20'55" Rt.
R = 1637.02'
T = 338.24'
L = 667.10'
E = 34.58'
SE= EXISTING

CURVE DATA
P.I. Sta 1351+30.08 Line "A"
Δ = 2°30'00" Lt.
R = 22918.31'
T = 500.08'
L = 1000.00'
E = 5.46'
SE= Existing

CURVE DATA
P.I. Sta 90+40.34 Line "C"
Δ = 24°18'41" Rt.
R = 1562.92'
T = 336.65'
L = 663.17'
E = 35.85'
SE= EXISTING

BENCHMARK SUMMARY

BM	Adj. Diff. Level Elev. (N.A.V.D. 88) (U.S. Survey Feet)	Station	Offset	Description
BM 280	823.78	OPOT 68+45.2 "C"	1733.6' RT.	An original panel point in the I-69 aerial control in an apartment complex S. of Bloomfield Rd. and E. of S.R. 37. (Not Shown On Plans)
BM 282	870.16	OPOC 1365+49.3 "A"	3176.9' LT.	An original mag nail panel point in the I-69 aerial control located near the west end of the bridge over 3rd Street approximately 50' North of a section corner. (Not Shown On Plans)

BM	Adj. Diff. Level Elev. (N.A.V.D. 88) (U.S. Survey Feet)	Station	Offset	Description
TBM 1	784.96	OPOT 82+74.6 "C"	55.1' RT.	SW corner Bloomfield Rd. and a stone drive.
TBM 2	787.43	OPOT 1344+11.8 "A"	34.3' RT.	Mag nail set in the N. side of a power pole on the S. side of Bloomfield Rd. opposite the SW corner of parking lot of Twin Lakes Lodge.
TBM 3	827.96	OPOC 1353+74.6 "A"	27.2' LT.	Mag nail set in the S. side of a power pole on the N. side of Bloomfield Rd. 150' E. of the Rolling Ridge entrance.

UNITED Consulting
1625 N. Post Road
Indianapolis, IN 46219
Phone 317-895-2585
Fax 317-895-2596
www.ucindy.com

WILLIAM CURTIS REGISTERED No. PE10505665 STATE OF INDIANA PROFESSIONAL ENGINEER

RECOMMENDED FOR APPROVAL — DESIGN ENGINEER — DATE 6/1/15

DESIGNED: JRS | DRAWN: JNII
CHECKED: JAR | CHECKED: JRS

THE CITY OF BLOOMINGTON
PATH, INT & SIGNAL IMPROVEMENTS

SURVEY CONTROL

HORIZONTAL SCALE	BRIDGE FILE
1" = 100'	-
VERTICAL SCALE	DESIGNATION
N/A	-
SURVEY BOOK	SHEETS
-	3 of 22
CONTRACT	PROJECT
-	-

File Name: p:\C3D\12-405\Road\Dwg\Plans Intersection\Survey Control.dwg Plot Date: 5/29/2015 Plotted By: Nimz, John

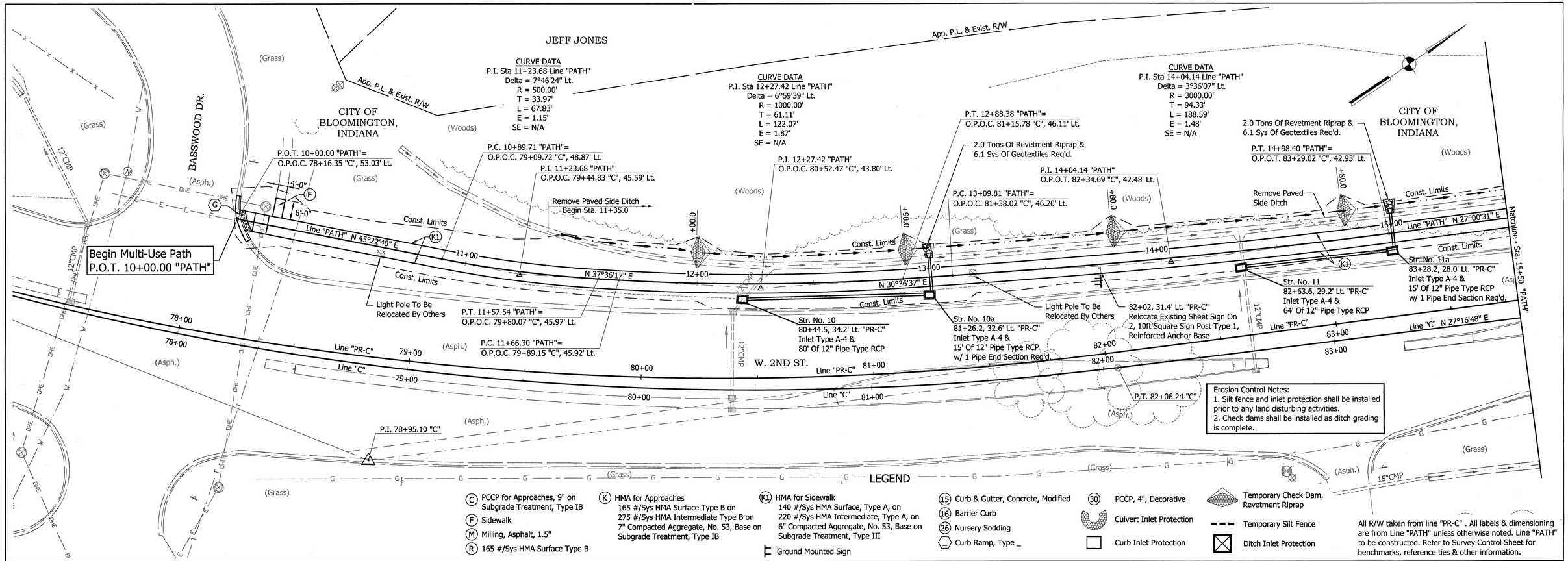

EARTHWORK SUMMARY

Common Excavation	
Line "PATH"	= 1,358 Cyd
Drive / Parking Lot	= 493 Cyd
Total Common Exc.	= 1,851 Cyd
Fill	
Line "PATH"	= 2,075 Cyd
Drive / Parking Lot	= 969 Cyd
Subtotal Fill	= 3,044 Cyd
25% Shrinkage	= 761 Cyd
Total Fill	= 3,085 Cyd
Balance	
Total Fill	= 3,085 Cyd
Less Total Common Exc.	= 1,851 Cyd
Total Borrow	= 1,954 Cyd

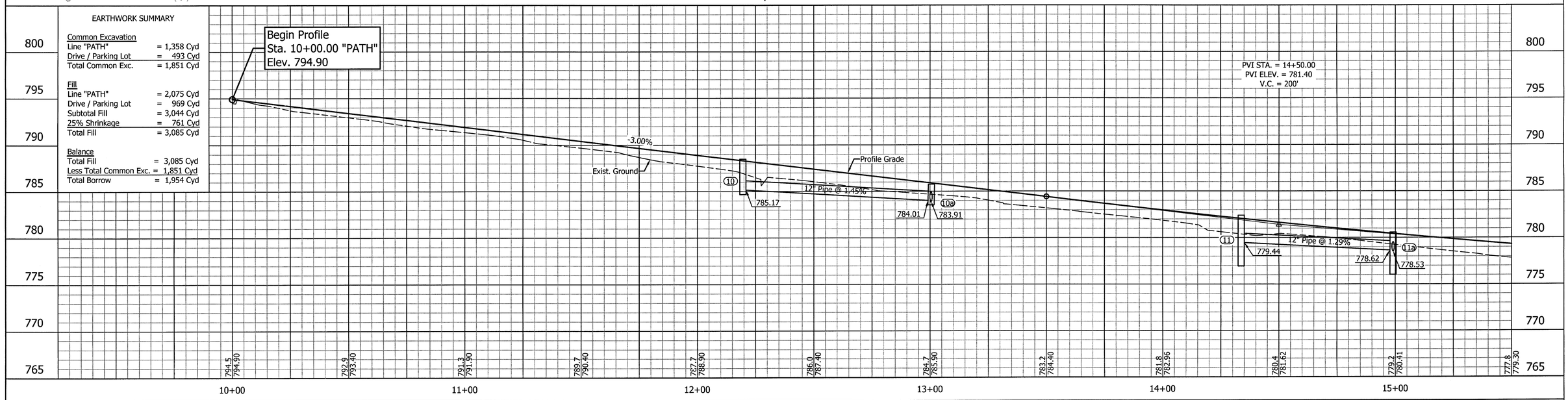

UNITED Consulting
1625 N. Post Road
Indianapolis, IN 46219
Phone 317-895-2585
Fax 317-895-2596
www.ucindy.com

WILLIAM CURTIS REGISTERED No. PE10505665 STATE OF INDIANA PROFESSIONAL ENGINEER

RECOMMENDED FOR APPROVAL — DESIGN ENGINEER — DATE 6/1/15

DESIGNED: JRS | DRAWN: JNII
CHECKED: JAR | CHECKED: JRS

THE CITY OF BLOOMINGTON PATH, INT & SIGNAL IMPROVEMENTS

PLAN & PROFILE LINE "PATH"

HORIZONTAL SCALE	BRIDGE FILE
1" = 20'	-
VERTICAL SCALE	DESIGNATION
1" = 5'	-
SURVEY BOOK	SHEETS
-	4 of 22
CONTRACT	PROJECT
-	-

File Name: p:\C3D\12-405\Road\Dwg\Plans Intersection\Plan & Profile Path.dwg Plot Date: 5/29/2015 Plotted By: Nimz, John

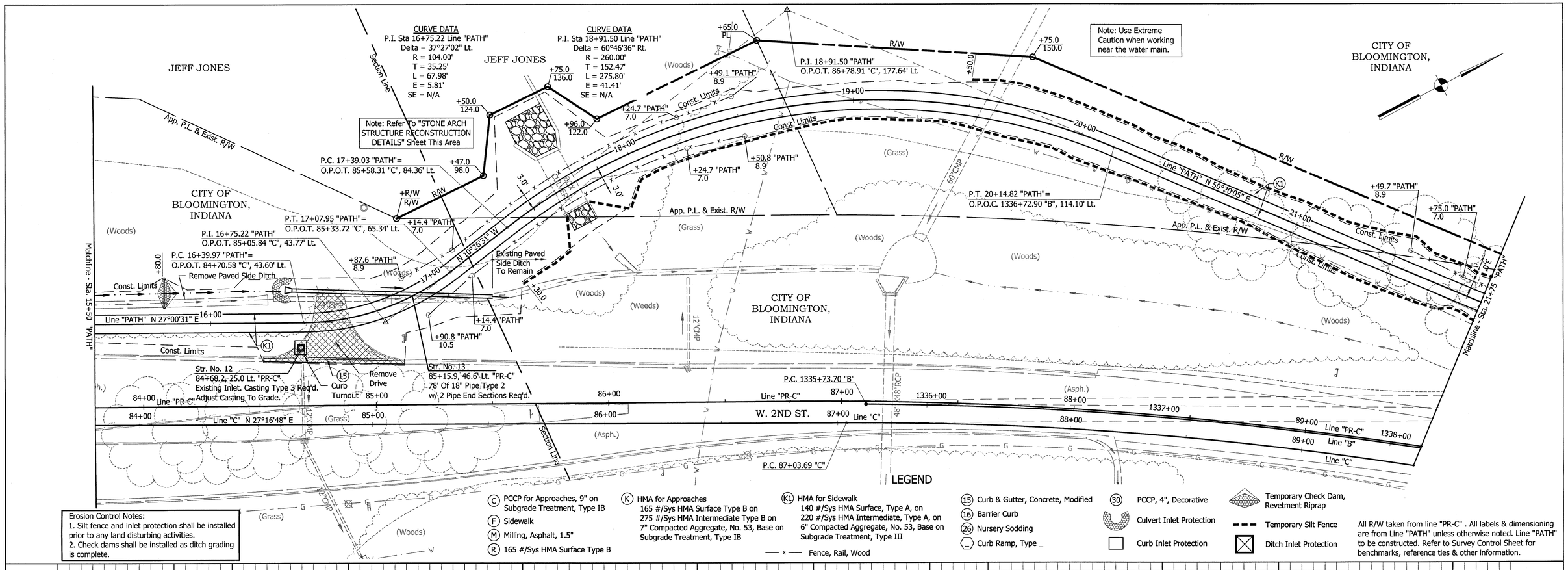

Erosion Control Notes:
1. Silt fence and inlet protection shall be installed prior to any land disturbing activities.
2. Check dams shall be installed as ditch grading is complete.

LEGEND

- (C) PCCP for Approaches, 9" on Subgrade Treatment, Type IB
- (F) Sidewalk
- (M) Milling, Asphalt, 1.5"
- (R) 165 #/Sys HMA Surface Type B
- (K) HMA for Approaches 165 #/Sys HMA Surface Type B on 275 #/Sys HMA Intermediate Type B on 7" Compacted Aggregate, No. 53, Base on Subgrade Treatment, Type IB
- (K1) HMA for Sidewalk 140 #/Sys HMA Surface, Type A, on 220 #/Sys HMA Intermediate, Type A, on 6" Compacted Aggregate, No. 53, Base on Subgrade Treatment, Type III
- —x— Fence, Rail, Wood
- (15) Curb & Gutter, Concrete, Modified
- (16) Barrier Curb
- (26) Nursery Sodding
- Curb Ramp, Type _
- (30) PCCP, 4", Decorative
- Culvert Inlet Protection
- Curb Inlet Protection
- Temporary Check Dam, Revetment Riprap
- Temporary Silt Fence
- Ditch Inlet Protection

All R/W taken from line "PR-C" . All labels & dimensioning are from Line "PATH" unless otherwise noted. Line "PATH" to be constructed. Refer to Survey Control Sheet for benchmarks, reference ties & other information.

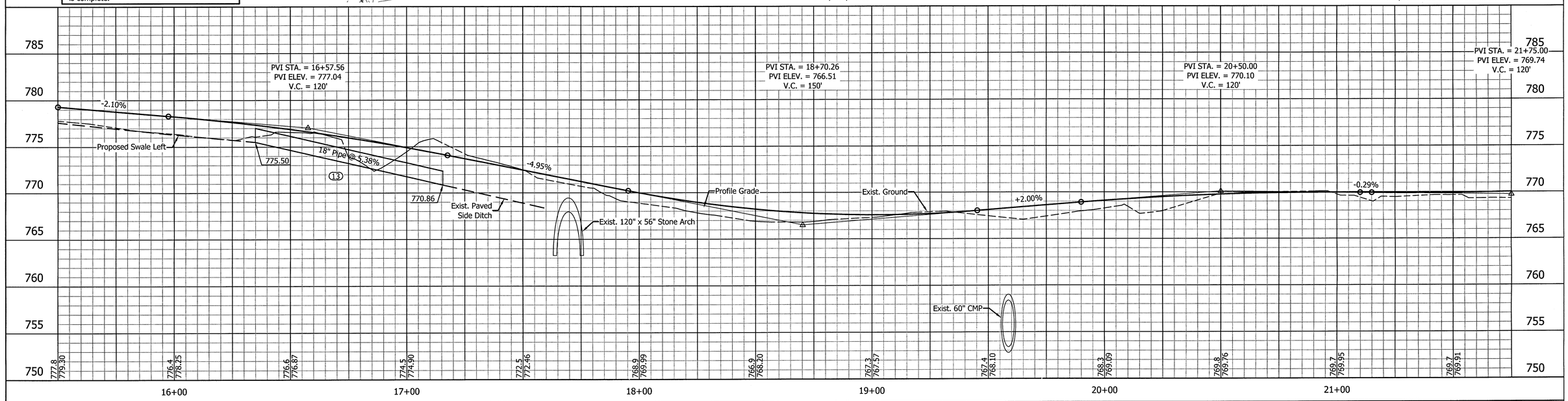

UNITED Consulting
1625 N. Post Road
Indianapolis, IN 46219
Phone 317-895-2585
Fax 317-895-2596
www.ucindy.com

WILLIAM CURTIS REGISTERED No. PE10505665 STATE OF INDIANA PROFESSIONAL ENGINEER

RECOMMENDED FOR APPROVAL	DESIGN ENGINEER	DATE 6/1/15	
DESIGNED: JRS	DRAWN: JNII		
CHECKED: JAR	CHECKED: JRS		

THE CITY OF BLOOMINGTON
PATH, INT & SIGNAL IMPROVEMENTS

PLAN & PROFILE
LINE "PATH"

HORIZONTAL SCALE	BRIDGE FILE
1" = 20'	-
VERTICAL SCALE	DESIGNATION
1" = 5'	-
SURVEY BOOK	SHEETS
-	5 of 22
CONTRACT	PROJECT
-	-

File Name: p:\C3D\12-405\Road\Dwg\Plans Intersection\Plan & Profile Path.dwg Plot Date: 5/29/2015 Plotted By: Nimz, John

CURVE DATA
P.I. Sta 23+38.55 Line "PATH"
Delta = 3°29'55" Lt.
R = 1000.00'
T = 30.54'
L = 61.06'
E = 0.47'
SE = N/A

Erosion Control Note:
1. Silt fence and inlet protection shall be installed prior to any land disturbing activities.

CITY OF BLOOMINGTON, INDIANA

P.T. 23+69.07 "PATH"=
O.P.O.C. 1340+03.68 "B", 34.18' Lt.

App. P.L. & Exist. R/W

(Grass)

+00.0
R/W

P.I. 23+38.55 "PATH"
O.P.O.C. 1339+73.87 "B", 36.58' Lt.

P.C. 23+08.01 "PATH"=
O.P.O.C. 1339+44.41 "B", 41.38' Lt.

Paving Exception
See Utility Vault Cap
Detail Sheet

+75.0 "PATH"
7.0

+00.3 "PATH"
8.9

Remove Asphalt
Parking Lot

Const. Limits

Line "PATH" N 50°20'05" E

Line "PATH" N 46°50'09" E

Matchline - Sta. 21+75 "PATH"

Matchline - Sta. 28+00 "PATH"

P.I. 1339+11.94 "B"

P.I. 90+40.34 "C"

Station Equation:
1342+40.80 "B" (Back)=
1342+76.96 "A" (Ahead)

P.T. 93+66.86 "C"

Line "A" N 51°08'53" E

P.I. 1343+00.00 "A"

Line "A" N 50°21'28" E

Line "C" N 51°35'29" E

W. 2ND ST.

Line "PR-C"

Line "B"

Line "C"

(Asph.)

(Woods)

Note: Use Extreme Caution when working near the water main.

LEGEND

- (C) PCCP for Approaches, 9" on Subgrade Treatment, Type IB
- (F) Sidewalk
- (M) Milling, Asphalt, 1.5"
- (R) 165 #/Sys HMA Surface Type B
- (K) HMA for Approaches 165 #/Sys HMA Surface Type B on 275 #/Sys HMA Intermediate Type B on 7" Compacted Aggregate, No. 53, Base on Subgrade Treatment, Type IB
- (K1) HMA for Sidewalk 140 #/Sys HMA Surface, Type A, on 220 #/Sys HMA Intermediate, Type A, on 6" Compacted Aggregate, No. 53, Base on Subgrade Treatment, Type III
- — x — Fence, Rail, Wood
- (15) Curb & Gutter, Concrete, Modified
- (16) Barrier Curb
- (26) Nursery Sodding
- (_) Curb Ramp, Type _
- (30) PCCP, 4", Decorative
- Culvert Inlet Protection
- Curb Inlet Protection
- Temporary Check Dam, Revetment Riprap
- Temporary Silt Fence
- Ditch Inlet Protection

All R/W taken from line "PR-C" . All labels & dimensioning are from Line "PATH" unless otherwise noted. Line "PATH" to be constructed. Refer to Survey Control Sheet for benchmarks, reference ties & other information.

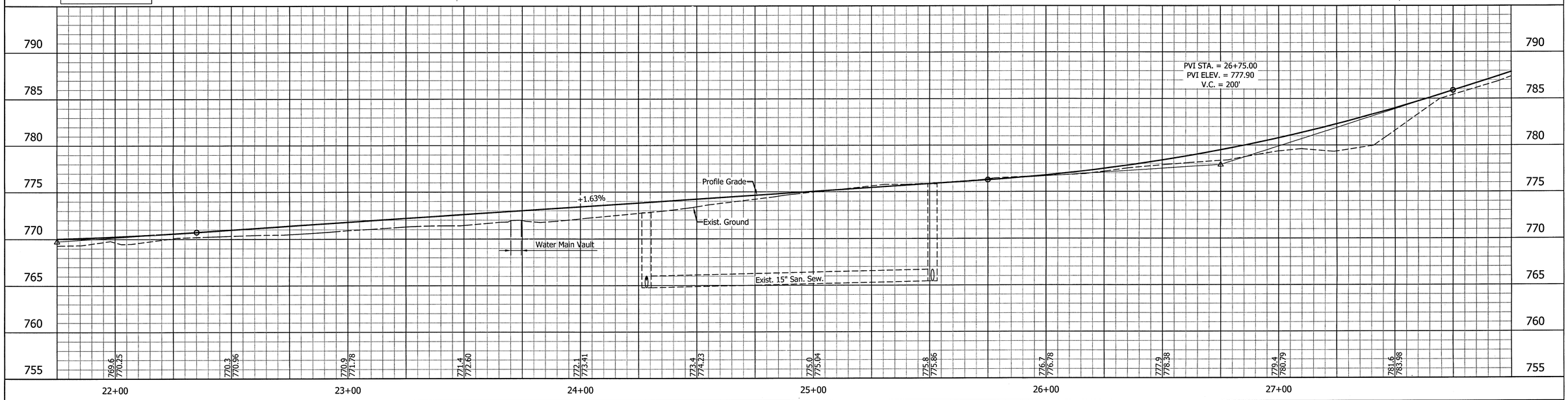

UNITED Consulting
1625 N. Post Road
Indianapolis, IN 46219
Phone 317-895-2585
Fax 317-895-2596
www.ucindy.com

WILLIAM CURTIS REGISTERED No. PE10505665 STATE OF INDIANA PROFESSIONAL ENGINEER

RECOMMENDED FOR APPROVAL — DESIGN ENGINEER — DATE 6/1/15

DESIGNED: JRS | DRAWN: JNII
CHECKED: JAR | CHECKED: JRS

THE CITY OF BLOOMINGTON
PATH, INT & SIGNAL IMPROVEMENTS

PLAN & PROFILE
LINE "PATH"

HORIZONTAL SCALE	BRIDGE FILE
1" = 20'	-
VERTICAL SCALE	DESIGNATION
1" = 5'	-
SURVEY BOOK	SHEETS
-	6 of 22
CONTRACT	PROJECT
-	-

File Name: p:\C3D\12-405\Road\Dwg\Plans Intersection\Plan & Profile Path.dwg Plot Date: 5/29/2015 Plotted By: Nimz, John

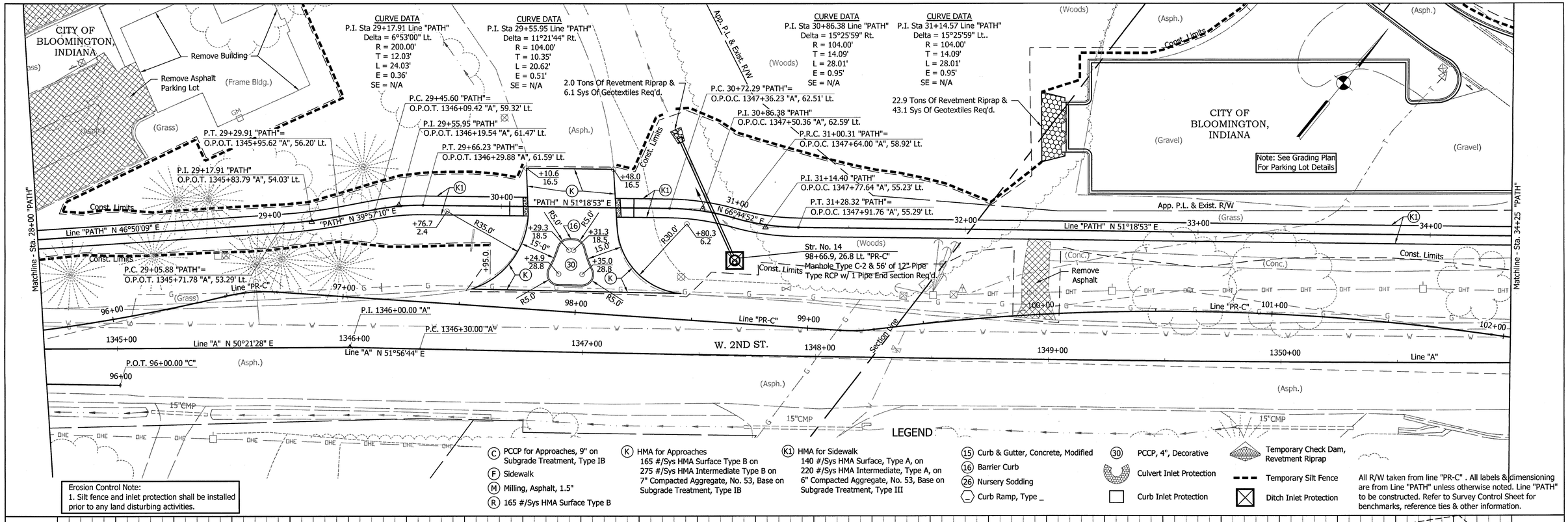

File Name: p:\C3D\12-405\Road\Dwg\Plans Intersection\Plan & Profile Path.dwg Plot Date: 5/29/2015 Plotted By: Nimz, John

UNITED Consulting
1625 N. Post Road
Indianapolis, IN 46219
Phone 317-895-2585
Fax 317-895-2596
www.ucindy.com

WILLIAM CURTIS REGISTERED No. PE10505665 STATE OF INDIANA PROFESSIONAL ENGINEER

RECOMMENDED FOR APPROVAL — DESIGN ENGINEER — DATE 6/1/15

DESIGNED: JRS | DRAWN: JNII
CHECKED: JAR | CHECKED: JRS

THE CITY OF BLOOMINGTON PATH, INT & SIGNAL IMPROVEMENTS

PLAN & PROFILE LINE "PATH"

HORIZONTAL SCALE	BRIDGE FILE
1" = 20'	-
VERTICAL SCALE	DESIGNATION
1" = 5'	-
SURVEY BOOK	SHEETS
-	7 of 22
CONTRACT	PROJECT
-	-

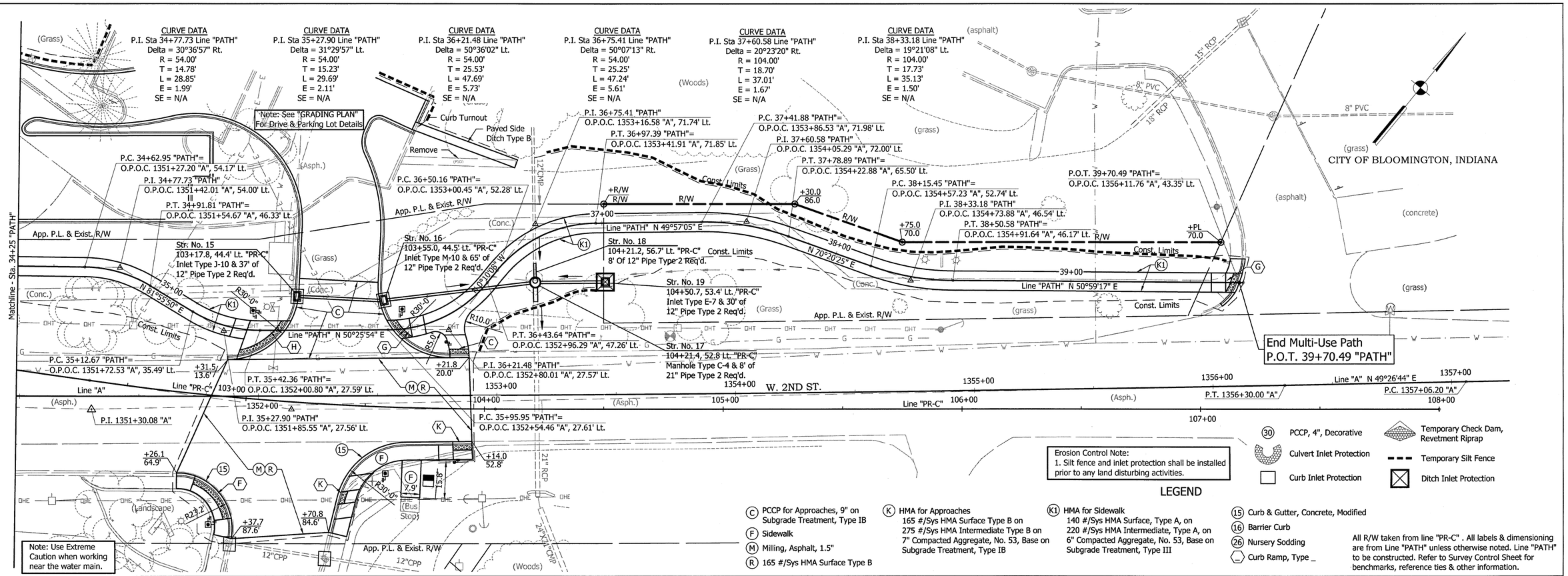

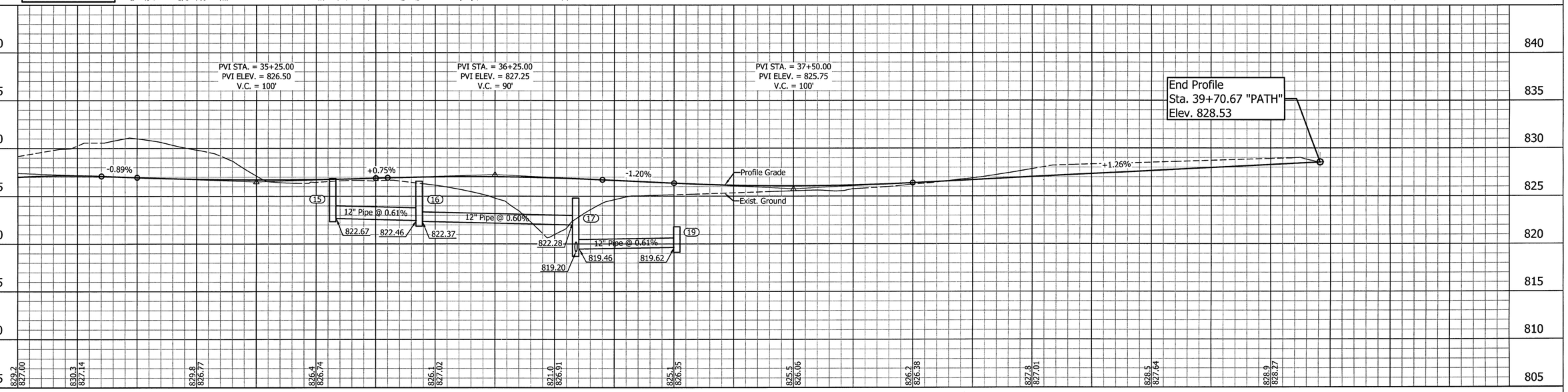

File Name: p:\C3D\12-405\Road\Dwg\Plans Intersection\Plan & Profile Path.dwg Plot Date: 5/29/2015 Plotted By: Nimz, John

UNITED Consulting
1625 N. Post Road
Indianapolis, IN 46219
Phone 317-895-2585
Fax 317-895-2596
www.ucindy.com

WILLIAM CURTIS REGISTERED No. PE10505665 STATE OF INDIANA PROFESSIONAL ENGINEER

RECOMMENDED FOR APPROVAL — DESIGN ENGINEER — DATE 6/1/15

DESIGNED: JRS | DRAWN: JNII
CHECKED: JAR | CHECKED: JRS

THE CITY OF BLOOMINGTON
PATH, INT & SIGNAL IMPROVEMENTS

PLAN & PROFILE
LINE "PATH"

HORIZONTAL SCALE	BRIDGE FILE
1" = 20'	-
VERTICAL SCALE	DESIGNATION
1" = 5'	-
SURVEY BOOK	SHEETS
-	8 of 22
CONTRACT	PROJECT
-	-

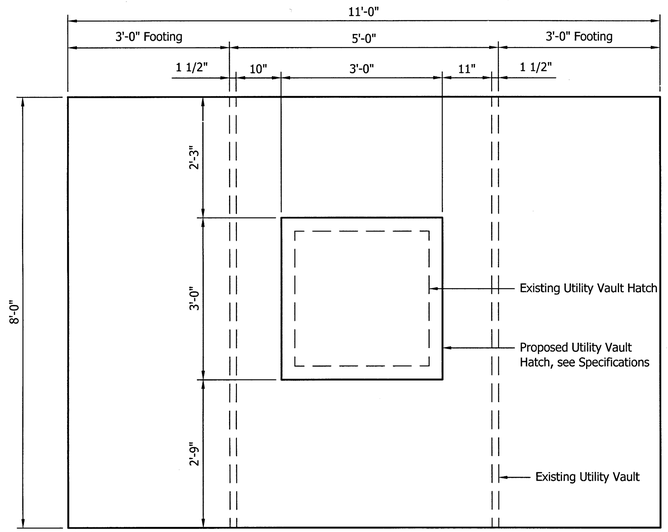

PLAN - UTILITY VAULT CAP LAYOUT

Scale: 3/4" = 1'-0"

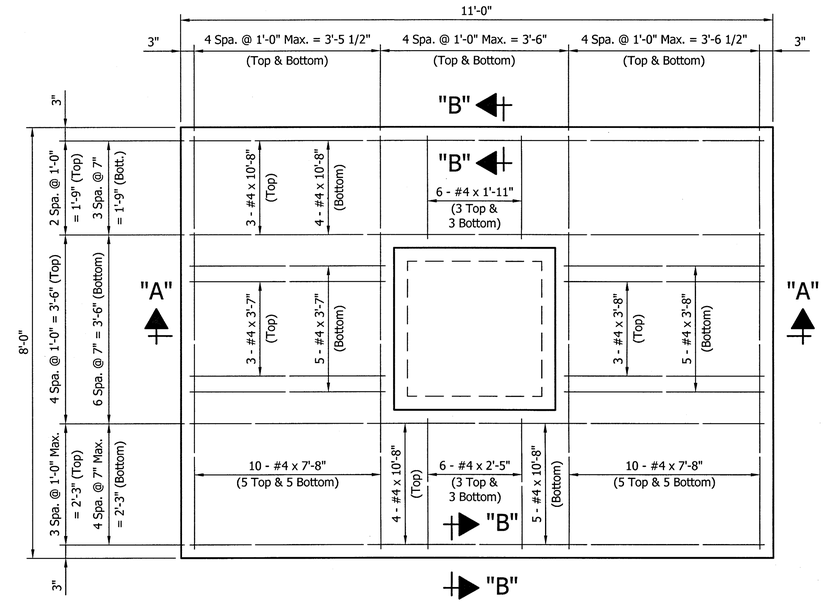

PLAN

Scale: 3/4" = 1'-0"

BILL OF MATERIALS

EPOXY COATED REINFORCING STEEL			
Size or Mark	No. of Bars	Length	Weight (lbs.)
#4	16	10'-8"	
#4	36	7'-8"	
#4	8	3'-8"	
#4	8	3'-7"	
#4	36	2'-8"	
#4	6	2'-5"	
#4	6	1'-11"	
		Total #4	419 lbs.
Total E.C. Reinforcing Steel			419 lbs.
CONCRETE			
Concrete, "A", Structures			2.0 cys.
Concrete, "B", Footings			1.8 cys.
MISCELLANEOUS			
Dense Graded Subbase			0.9 cys.
Access Hatch			1 each

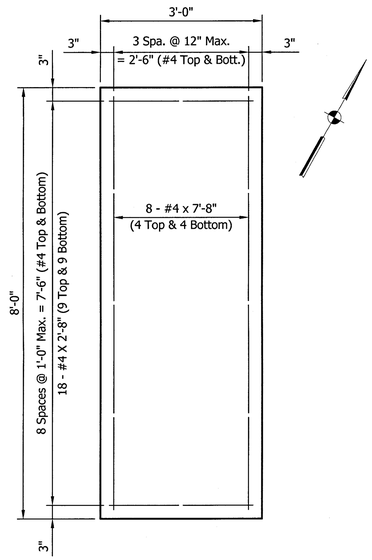

FOOTING PLAN (TYPICAL)

Scale: 3/4" = 1'-0"

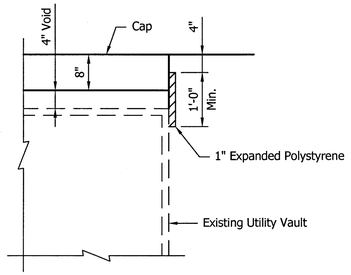

SECTION B-B

Scale: 3/4" = 1'-0"

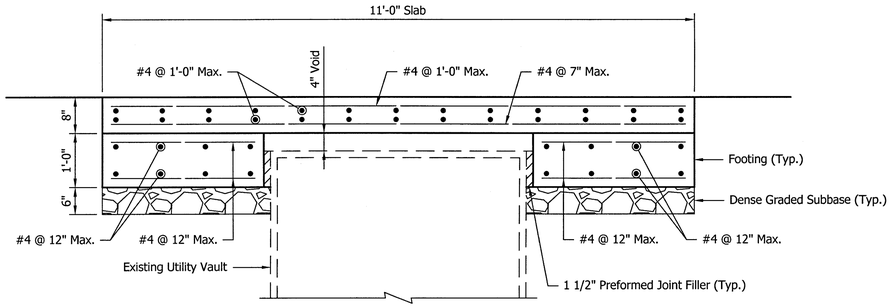

SECTION A-A

Scale: 3/4" = 1'-0"

File Name: p:\C3D\12-405\Bridge\Dwg\Plans\Utility Vault Cap.dwg Plot Date: 5/29/2015 Plotted By: Nimz, John

UNITED Consulting
1625 N. Post Road
Indianapolis, IN 46219
Phone 317-895-2585
Fax 317-895-2596
www.ucindy.com

SCOTT G. MINNICH REGISTERED No. 19800040 STATE OF INDIANA PROFESSIONAL ENGINEER

RECOMMENDED FOR APPROVAL — DESIGN ENGINEER — DATE 6/1/15

DESIGNED: SGM | DRAWN: AJM
CHECKED: JNR | CHECKED: SGM

THE CITY OF BLOOMINGTON
PATH, INT & SIGNAL IMPROVEMENTS

UTILITY VAULT CAP DETAILS
LINE "PATH"

HORIZONTAL SCALE	BRIDGE FILE
1" = 10'	-
VERTICAL SCALE	DESIGNATION
N/A	-
SURVEY BOOK	SHEETS
-	9 of 22
CONTRACT	PROJECT
-	-

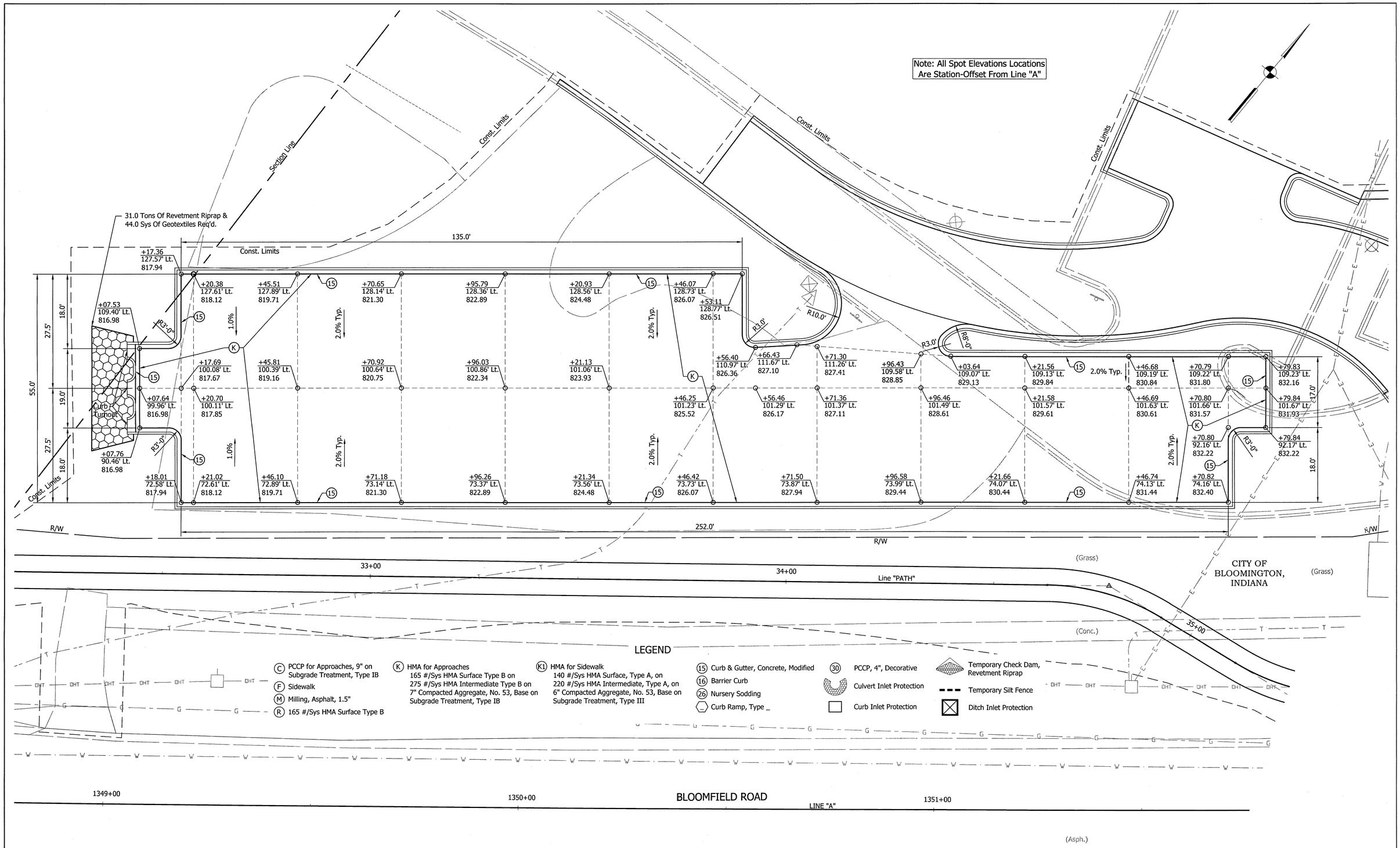

File Name: p:\C3D\12-405\Road\Dwg\Plans Intersection\Grading Plan.dwg Plot Date: 5/29/2015 Plotted By: Nimz, John

UNITED Consulting
1625 N. Post Road
Indianapolis, IN 46219
Phone 317-895-2585
Fax 317-895-2596
www.ucindy.com

WILLIAM CURTIS JARRETT REGISTERED No. PE10505665 STATE OF INDIANA PROFESSIONAL ENGINEER

RECOMMENDED FOR APPROVAL — DESIGN ENGINEER — DATE 6/1/15

DESIGNED: CCR | DRAWN: JNII
CHECKED: JAR | CHECKED: CCR

THE CITY OF BLOOMINGTON PATH, INT & SIGNAL IMPROVEMENTS

GRADING PLAN PARKING LOT

HORIZONTAL SCALE	BRIDGE FILE
1" = 10'	-
VERTICAL SCALE	DESIGNATION
N/A	-
SURVEY BOOK	SHEETS
-	10 of 22
CONTRACT	PROJECT
-	-

LEGEND

- (C) PCCP for Approaches, 9" on Subgrade Treatment, Type IB
- (F) Sidewalk
- (M) Milling, Asphalt, 1.5"
- (R) 165 #/Sys HMA Surface Type B
- (K) HMA for Approaches 165 #/Sys HMA Surface Type B on 275 #/Sys HMA Intermediate Type B on 7" Compacted Aggregate, No. 53, Base on Subgrade Treatment, Type IB
- (K1) HMA for Sidewalk 140 #/Sys HMA Surface, Type A, on 220 #/Sys HMA Intermediate, Type A, on 6" Compacted Aggregate, No. 53, Base on Subgrade Treatment, Type III
- (15) Curb & Gutter, Concrete, Modified
- (16) Barrier Curb
- (26) Nursery Sodding
- (_) Curb Ramp, Type _
- (30) PCCP, 4", Decorative
- Culvert Inlet Protection
- Curb Inlet Protection
- Temporary Check Dam, Revetment Riprap
- Temporary Silt Fence
- Ditch Inlet Protection

Note: All Spot Elevations Locations Are Station-Offset From Line "A"

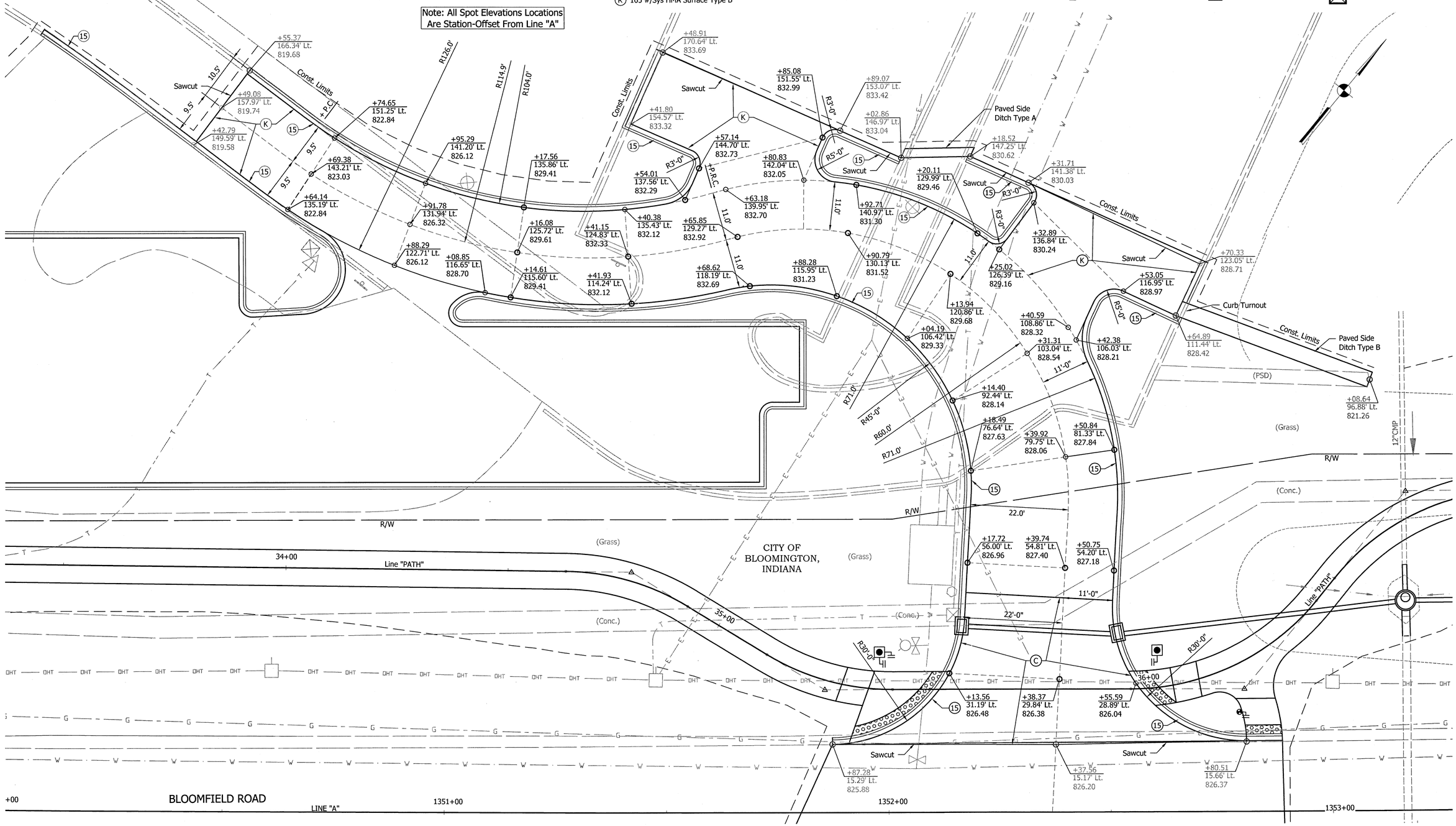

UNITED Consulting
1625 N. Post Road
Indianapolis, IN 46219
Phone 317-895-2585
Fax 317-895-2596
www.ucindy.com

WILLIAM CURTIS REGISTERED No. PE10505665 STATE OF INDIANA PROFESSIONAL ENGINEER

RECOMMENDED FOR APPROVAL	DESIGN ENGINEER	DATE 6/1/15	
DESIGNED: CCR	DRAWN: JNII		
CHECKED: JAR	CHECKED: CCR		

THE CITY OF BLOOMINGTON
PATH, INT & SIGNAL IMPROVEMENTS

GRADING PLAN
DRIVEWAY

HORIZONTAL SCALE	BRIDGE FILE
1" = 10'	-
VERTICAL SCALE	DESIGNATION
N/A	-
SURVEY BOOK	SHEETS
-	11 of 22
CONTRACT	PROJECT
-	-

File Name: p:\C3D\12-405\Road\Dwg\Plans Intersection\Grading Plan.dwg Plot Date: 5/29/2015 Plotted By: Nimz, John

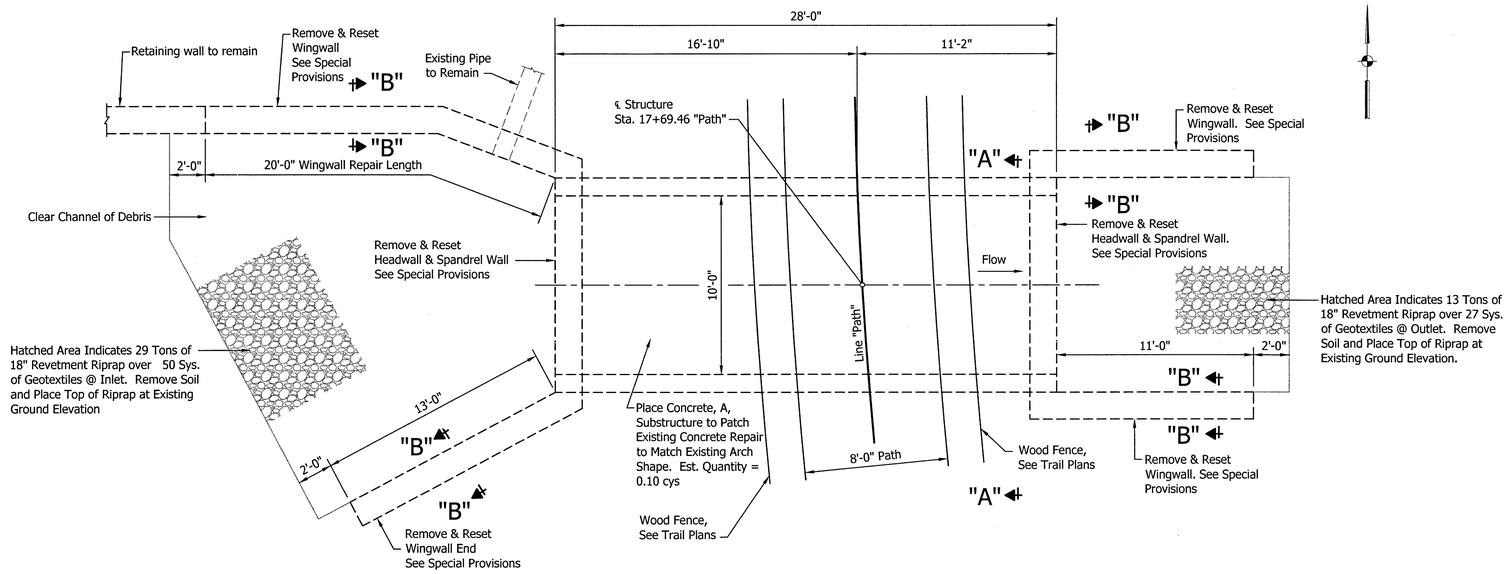

PLAN

Scale: 1/4" = 1'-0"

GENERAL NOTES

No plans are available for the existing structure. All dimensions of the existing bridge are based on field measurements. Where new work is to be fitted to old work, the Contractor shall check all dimensions and conditions in the field and report any errors or discrepancies to the Engineer and assume responsibility for the corrections and the fit of the new part to the old.

Existing trees and other vegetation shall be removed from on and around the existing structure. See Special Provisions.

Wall, Rebuild Quantities	
NW Wingwall	20 lft
NE Wingwall	11 lft
SW Wingwall	13 lft
SE Wingwall	11 lft
West headwall	12 lft
East Headwall	12 lft
Total =	79 lft

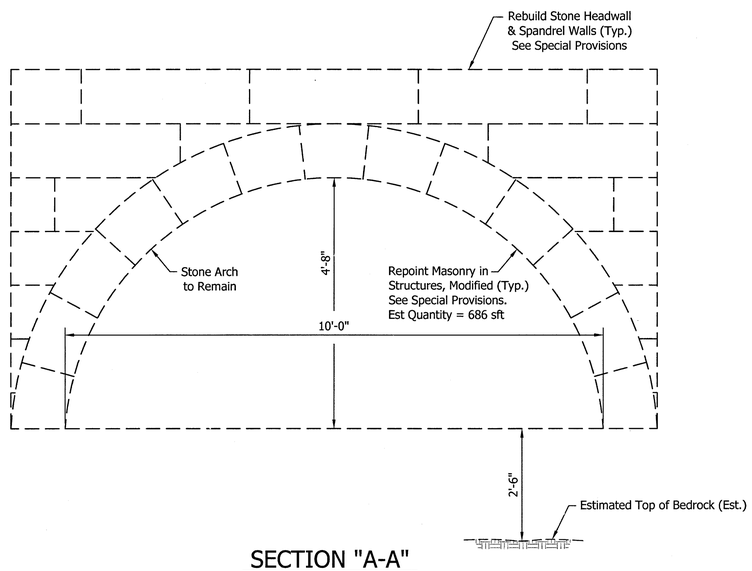

SECTION "A-A"

Scale: 3/4" = 1'-0"

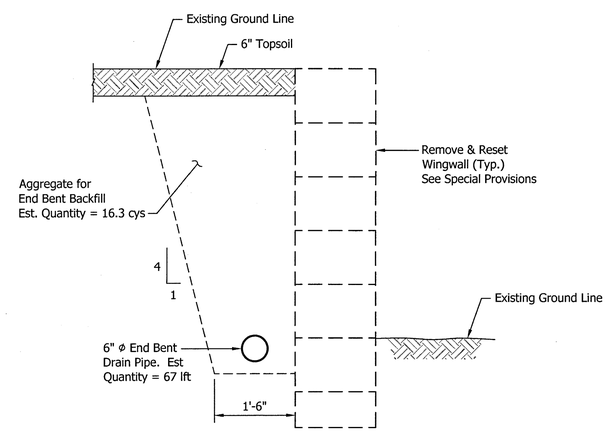

SECTION "B-B"

Scale: 3/4" = 1'-0"

STONE ARCH STRUCTURE
1 SPAN: 10'-0", RISE: 4'-8"
SKEW: 0°
PEDESTRIAN PATH OVER
UNNAMED CREEK

UNITED Consulting
1625 N. Post Road
Indianapolis, IN 46219
Phone 317-895-2585
Fax 317-895-2596
www.ucindy.com

SCOTT G. MINNICH REGISTERED No. 19800040 STATE OF INDIANA PROFESSIONAL ENGINEER

RECOMMENDED FOR APPROVAL	DESIGN ENGINEER	6/1/15 DATE	
DESIGNED: SGM	DRAWN: RSJ		
CHECKED: JNR	CHECKED: SGM		

THE CITY OF BLOOMINGTON
PATH, INT & SIGNAL IMPROVEMENTS

STONE ARCH STRUCTURE
RECONSTRUCTION DETAILS

HORIZONTAL SCALE	BRIDGE FILE
AS NOTED	-
VERTICAL SCALE	DESIGNATION
AS NOTED	-
SURVEY BOOK	SHEETS
-	12 of 22
CONTRACT	PROJECT
-	-

File Name: p:\C3D\12-405\Bridge\Dwg\Plans\General Plan.dwg Plot Date: 5/29/2015 Plotted By: Nimz, John

PAVEMENT MARKING LEGEND

- (17) Transverse Marking, Thermoplastic, Stop Line, 24"
- (18) Pavement Message Marking, Thermoplastic, Word (ONLY)
- (19) Pavement Message Marking, Thermoplastic, Lane Indication Arrow
- (30) Line, Thermoplastic, Solid, White, 4"
- (32) Line, Thermoplastic, Broken, White, 4"
- (33) Transverse Markings, Thermoplastic, Crosswalk, White, 24", 24" Spacing
- (34) Transverse Marking, Thermoplastic, Crosswalk Line, White, 6"
- (37) Line, Thermoplastic, Solid, Yellow, 4"
- (40) Line, Paint, Solid, White, 4"
- (R) Existing Marking To Be Removed
- Overhead Signal Span Mounted Sign
- Ground Mounted Sign

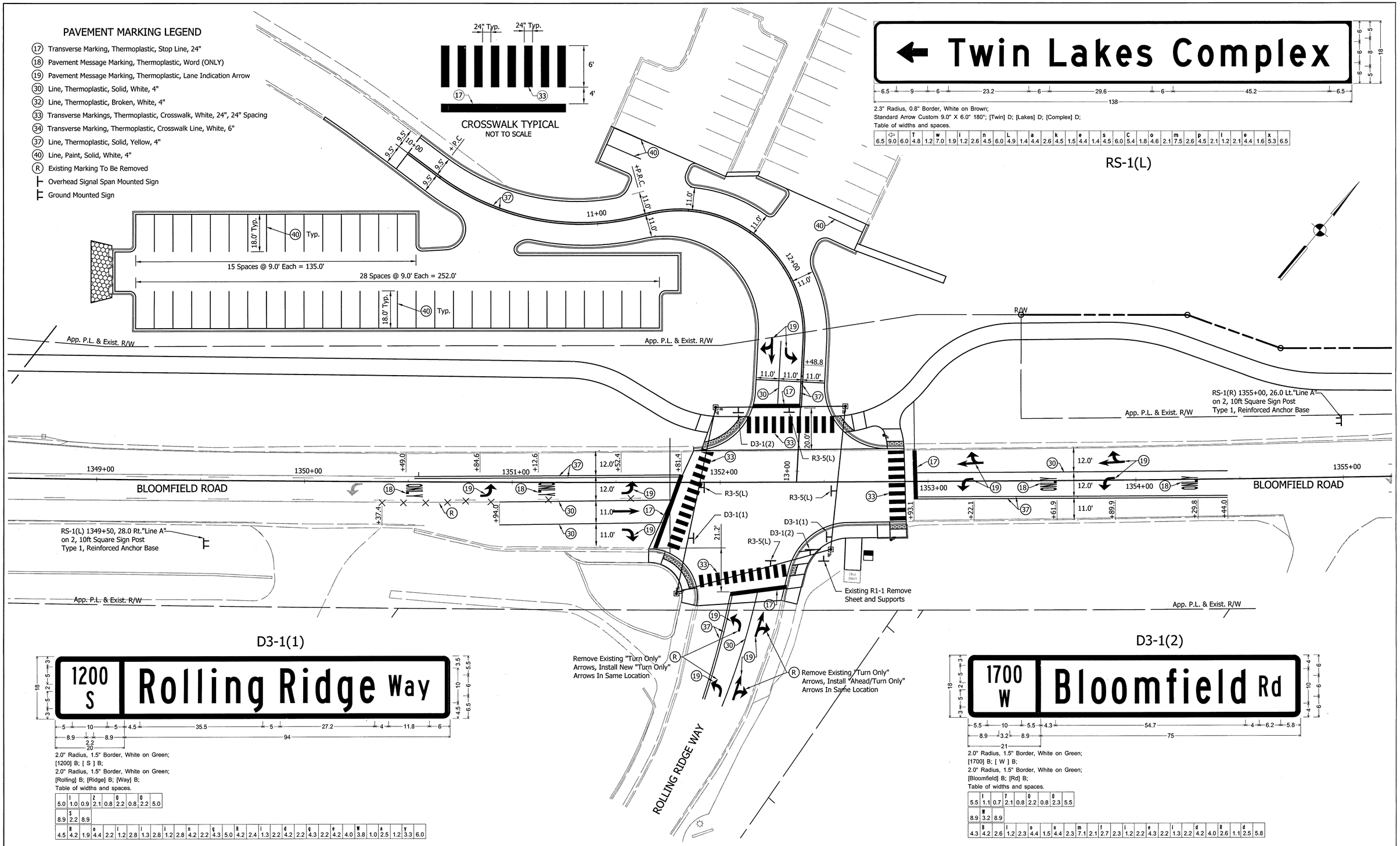

UNITED Consulting
1625 N. Post Road
Indianapolis, IN 46219
Phone 317-895-2585
Fax 317-895-2596
www.ucindy.com

WILLIAM CURTIS REGISTERED No. PE10505665 STATE OF INDIANA PROFESSIONAL ENGINEER

RECOMMENDED FOR APPROVAL — DESIGN ENGINEER — DATE 6/1/15

DESIGNED: JRS | DRAWN: JNII
CHECKED: JAR | CHECKED: JRS

THE CITY OF BLOOMINGTON
PATH, INT & SIGNAL IMPROVEMENTS

MARKING & SIGNING PLAN

HORIZONTAL SCALE	BRIDGE FILE
1" = 20'	-
VERTICAL SCALE	DESIGNATION
N/A	-
SURVEY BOOK	SHEETS
-	13 of 22
CONTRACT	PROJECT
-	-

File Name: p:\C3D\12-405\Road\Dwg\Plans Intersection\Signing & Marking Plan.dwg Plot Date: 5/29/2015 Plotted By: Nimz, John

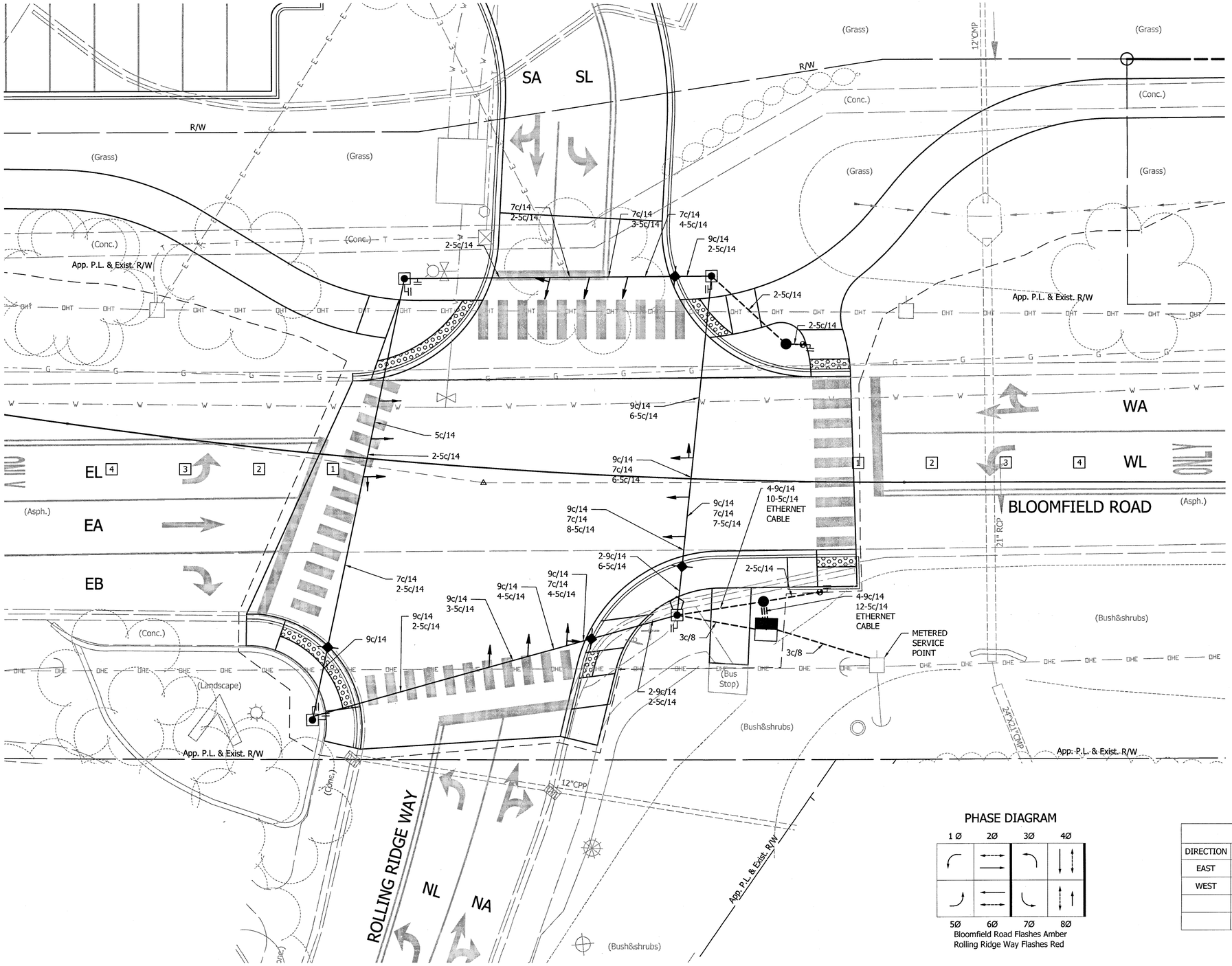

FOUNDATION SCHEDULE

No.	Station
SP1	102+99.68, 37.1 Lt. "PR-C"
SP2	103+64.06, 41.3 Lt. "PR-C"
SP3	103+57.44, 27.7 Rt. "PR-C"
SP4	102+84.73, 47.8 Rt. "PR-C"
HH1	103+80.00, 27.9 Lt. "PR-C"
HH2	103+76.50, 24.5 Rt. "PR-C"
CC	103+77.18, 30.2 Rt. "PR-C"

SIGNAL LEGEND

- Traffic Signal Head, 4 Face Left-Turn W/ Flashing Yellow Arrow
- Traffic Signal Head, 3 Face, 12" Red, Amber, Green
- Controller Cabinet, Type P-1
- Strain Pole, 30'
- Receiver Processor, Magnetometer Detector
- Type N Sensor, Magnetometer Detector
- Pedestal for Pedestrian Signal Head
- Pedestrian Signal Head and Button/Sign
- Hand Hole
- Span Mounted Junction Box
- Conduit, PVC, Schedule 40

PHASE DIAGRAM

Bloomfield Road Flashes Amber
Rolling Ridge Way Flashes Red

SENSOR TAGGING TABLE

DIRECTION	LANE	PHASE	LOOPS	C	LEAD-IN RACK LABLES
EAST	L	5	1,2,3,4		EL5-1,2,3,4
WEST	L	1	1,2,3,4		WL1-1,2,3,4

UNITED Consulting
1625 N. Post Road
Indianapolis, IN 46219
Phone 317-895-2585
Fax 317-895-2596
www.ucindy.com

WILLIAM CURTIS REGISTERED No. PE10505665 STATE OF INDIANA PROFESSIONAL ENGINEER

RECOMMENDED FOR APPROVAL — DESIGN ENGINEER — DATE 6/1/15

DESIGNED: JRS | DRAWN: JNII
CHECKED: JAR | CHECKED: JRS

THE CITY OF BLOOMINGTON
PATH, INT & SIGNAL IMPROVEMENTS

SIGNAL PLAN

HORIZONTAL SCALE	BRIDGE FILE
1" = 10'	-
VERTICAL SCALE	DESIGNATION
N/A	-
SURVEY BOOK	SHEETS
-	14 of 22
CONTRACT	PROJECT
-	-

File Name: p:\C3D\12-405\Road\Dwg\Plans Intersection\Signal Plan.dwg Plot Date: 5/29/2015 Plotted By: Nimz, John

STRUCTURE DATA TABLE

STRUCTURE NUMBER	LOCATION					SIZE	PIPE TYPE	MANHOLE, INLET, CATCH BASIN, OR SPECIALTY STRUCTURE	LENGTH	SKEW	COVER	FLOWLINE		SERVICE LIFE	SITE DESIGNATION	pH	BACKFILL METHOD	STRUCTURE BACKFILL TYPE I	REVETMENT RIPRAP	CLASS 1 RIPRAP	CLASS 2 RIPRAP	GEOTEXTILES	VIDEO INSPECTION FOR PIPES	PIPE END SECTION PRECAST CONCRETE	GRATED BOX END SECTION			SAFETY METAL END SECTION		CONNECT TO STR. NO.	REMARKS
	STATION	LEFT	RIGHT	CROSS	OFFSET							UP STREAM	DOWN STREAM																			
					FT	IN			LFT		FT	ELEV.	ELEV.	YR.				CYS	TON	TON	TON	SYS	LFT	EACH	TYPE	SLOPE	EACH	SLOPE	EACH		
Line PR-C																																
10	80+44.5	X			34.2	12	RCP	Inlet Type A-4	80		2.0	785.17	784.01	50	NA	6.5	1	X														Connect to Existing Pipe
10a	81+26.2	X			32.6	12	RCP	Inlet Type A-4	15		0.7	783.91	783.85	50	NA	6.5	1	X	2			6.1		1							
11	82+63.6	X			29.2	12	RCP	Inlet Type A-4	64		1.6	779.44	778.62	50	NA	6.5	1	X													Connect to Existing Pipe
11a	83+28.2	X			28.0	12	RCP	Inlet Type A-4	15		0.6	778.53	778.47	50	NA	6.5	1	X	2			6.1		1							
12	84+68.2	X			25.0			Existing Inlet																							Casting Type 3 Req'd., Adjust Casting To Grade
13	85+15.9	X			46.6	18	RCP	Pipe	78		2.0	775.50	770.86	50	NA	6.5	1	X						1							Outlets into Existing Paved Ditch
14	98+66.9	X			26.8	12	RCP	Manhole Type C-2	54		6.0	792.45	792.24	50	NA	6.5	1	X	2			6.1		1							
15	103+17.8	X			44.4	12	RCP	Inlet Type J-10	37		2.0	822.84	822.62	50	NA	6.5	1	X												16	
16	103+55.0	X			44.5	12	RCP	Catch Basin Type M-10	65		3.0	822.37	821.98	50	NA	6.5	1	X												17	
17	104+21.4	X			52.8	21	RCP	Manhole Type C-4	8		4.0	819.20	818.50	50	NA	6.5	1	X													Connect to Existing Pipe
18	104+21.2	X			56.7	12	RCP	Pipe	8		4.0	819.53	819.30	50	NA	6.5	1	X												17	Connect to Existing Pipe
19	104+50.7	X			53.4	18	RCP	Inlet Type E-7	30		2.0	819.63	819.45	50	NA	6.5	1	X												17	

EROSION CONTROL SUMMARY TABLE

PERIMETER PROTECTION

TYPE	FROM	TO	LEFT	RIGHT	MED.	UNIT
TEMPORARY SILT FENCE						LFT
LINE "PATH"	17+30	25+50		X		820
	19+50	30+10	X			1,060
	27+00	29+95		X		295
(PARKING LOT REMOVAL)	27+60	29+40	X			540
	30+50	39+65	X			915
	36+25	37+00		X		75
TOTAL TEMPORARY SILT FENCE						3,705

DITCHES

TYPE	STATION	LEFT	RIGHT	MED.	UNIT
CHECK DAM, REVETMENT RIPRAP					TON
LINE "PATH"	12+00	X			6.0
	12+90	X			6.0
	13+80	X			6.0
	14+80	X			6.0
	15+80	X			6.0
TOTAL TEMPORARY CHECK DAM, REVETMENT RIPRAP					30.0

INLET PROTECTION

TYPE	STATION	LEFT	RIGHT	MED.	UNIT
CULVERT INLET PROTECTION					EACH
LINE "PATH"	16+35	X			1
CURB INLET PROTECTION					
LINE "PATH"	16+39		X		1
	35+37		X		1
	35+58	X			1
	35+69		X		1
	35+93	X			1
DITCH INLET PROTECTION					
LINE "PATH"	31+05		X		1
	37+01		X		1
TOTAL TEMPORARY INLET PROTECTION					8

UNITED Consulting
1625 N. Post Road
Indianapolis, IN 46219
Phone 317-895-2585
Fax 317-895-2596
www.ucindy.com

WILLIAM CURTIS REGISTERED No. PE10505665 STATE OF INDIANA PROFESSIONAL ENGINEER

RECOMMENDED FOR APPROVAL — DESIGN ENGINEER — DATE 4/1/15

DESIGNED: JRS | DRAWN: JNII
CHECKED: JAR | CHECKED: JRS

THE CITY OF BLOOMINGTON
PATH, INT & SIGNAL IMPROVEMENTS

MISCELLANEOUS TABLES

HORIZONTAL SCALE	BRIDGE FILE
N/A	-
VERTICAL SCALE	DESIGNATION
N/A	-
SURVEY BOOK	SHEETS
-	15 of 22
CONTRACT	PROJECT
-	-

File Name: p:\C3D\12-405\Road\Dwg\Plans Intersection\Table Str Data.dwg Plot Date: 5/29/2015 Plotted By: Nimz, John

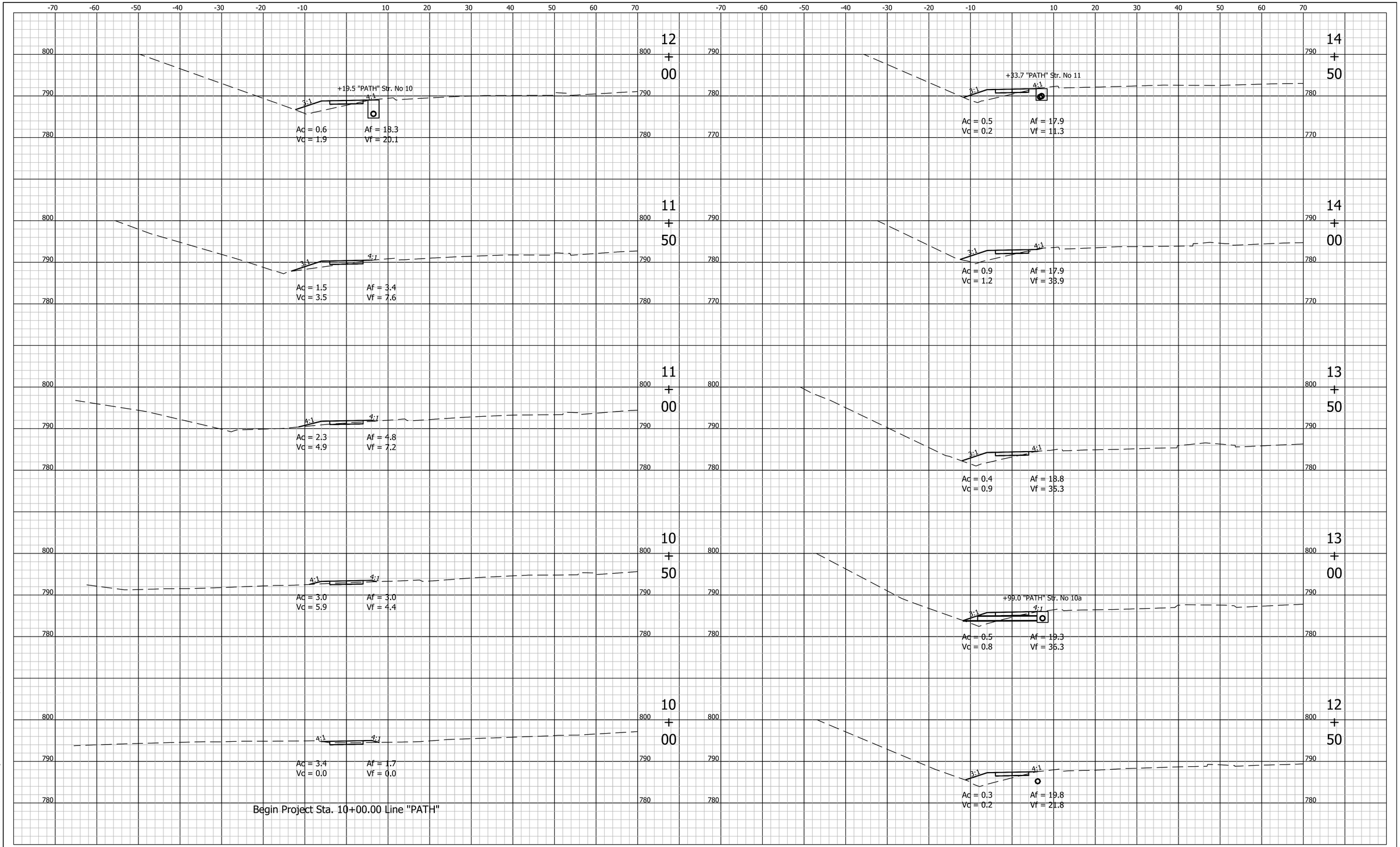

File Name: P:\C3D\12-405\Road\Dwg\Plans Intersection\XSections Path.dwg Plot Date: 4/24/2015 Plotted By: Ross, Caleb

UNITED Consulting
1625 N. Post Road
Indianapolis, IN 46219
Phone 317-895-2585
Fax 317-895-2596
www.ucindy.com

DESIGNED: JRS	DRAWN: JNII
CHECKED: JAR	CHECKED: JRS

THE CITY OF BLOOMINGTON
PATH, INT & SIGNAL IMPROVEMENTS

CROSS SECTIONS
LINE "PATH"

HORIZONTAL SCALE	BRIDGE FILE
1" = 10'	-
VERTICAL SCALE	DESIGNATION
1" = 10'	-
SURVEY BOOK	SHEETS
-	16 of 22
CONTRACT	PROJECT
-	-

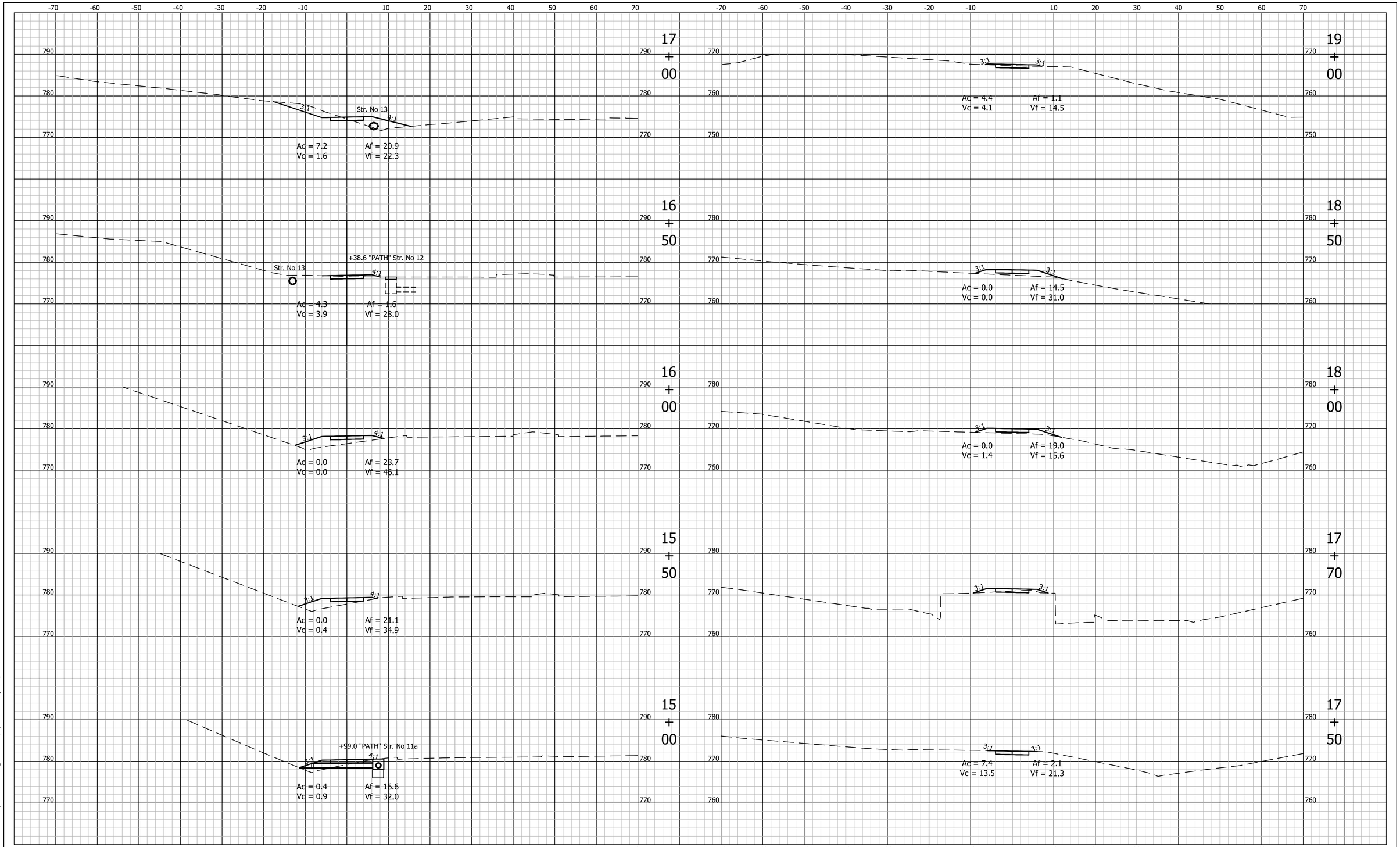

File Name: P:\C3D\12-405\Road\Dwg\Plans Intersection\XSections Path.dwg Plot Date: 4/24/2015 Plotted By: Ross, Caleb

UNITED Consulting

1625 N. Post Road
Indianapolis, IN 46219
Phone 317-895-2585
Fax 317-895-2596
www.ucindy.com

DESIGNED: JRS	DRAWN: JNII
CHECKED: JAR	CHECKED: JRS

THE CITY OF BLOOMINGTON
PATH, INT & SIGNAL IMPROVEMENTS

CROSS SECTIONS
LINE "PATH"

HORIZONTAL SCALE	BRIDGE FILE
1" = 10'	-
VERTICAL SCALE	DESIGNATION
1" = 10'	-
SURVEY BOOK	SHEETS
-	17 of 22
CONTRACT	PROJECT
-	-

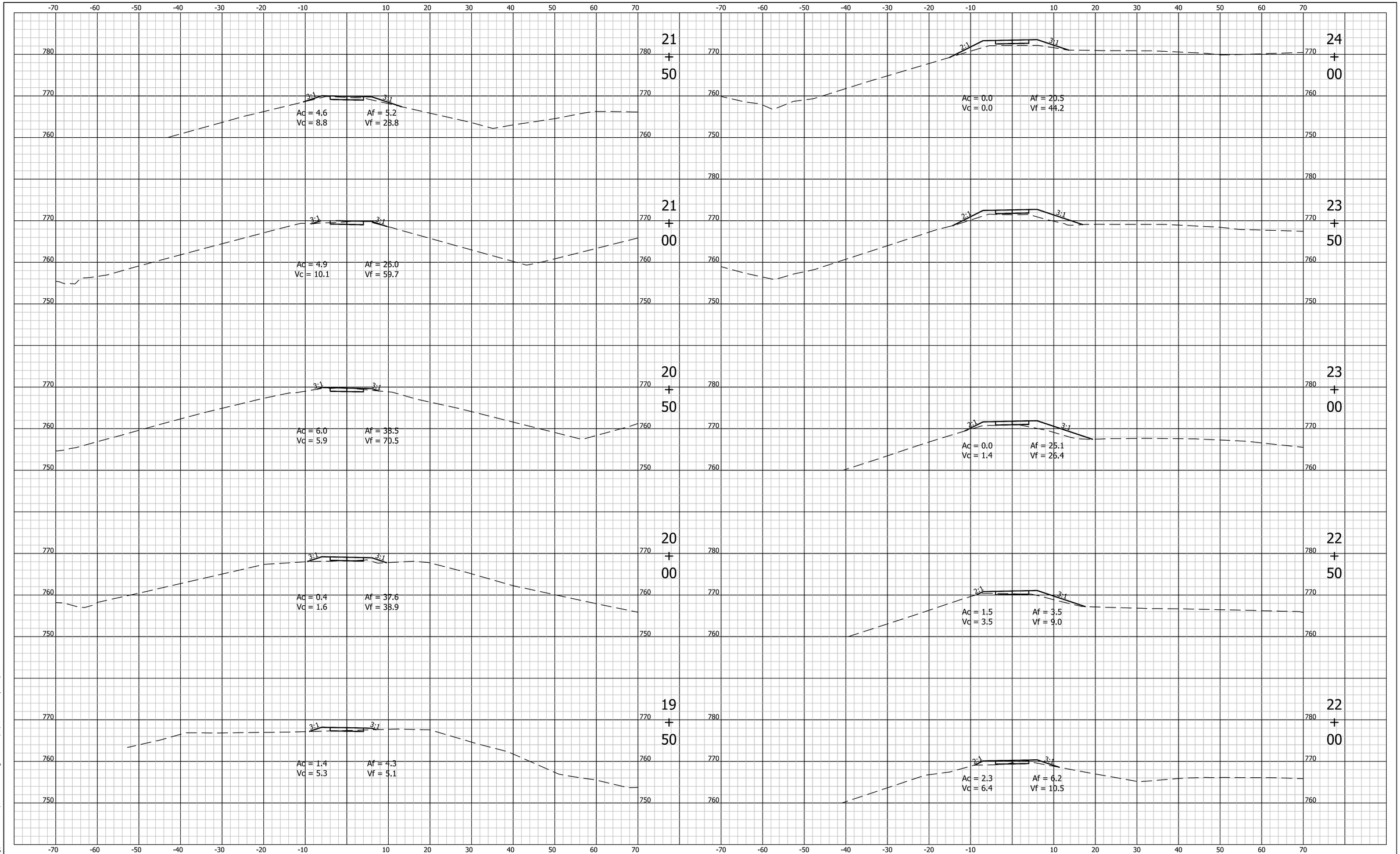

File Name: P:\C3D\12-405\Road\Dwg\Plans Intersection\XSections Path.dwg Plot Date: 4/24/2015 Plotted By: Ross, Caleb

UNITED Consulting
1625 N. Post Road
Indianapolis, IN 46219
Phone 317-895-2585
Fax 317-895-2596
www.ucindy.com

DESIGNED: JRS	DRAWN: JNII
CHECKED: JAR	CHECKED: JRS

THE CITY OF BLOOMINGTON
PATH, INT & SIGNAL IMPROVEMENTS

CROSS SECTIONS
LINE "PATH"

HORIZONTAL SCALE	BRIDGE FILE
1" = 10'	-
VERTICAL SCALE	DESIGNATION
1" = 10'	-
SURVEY BOOK	SHEETS
-	18 of 22
CONTRACT	PROJECT
-	-

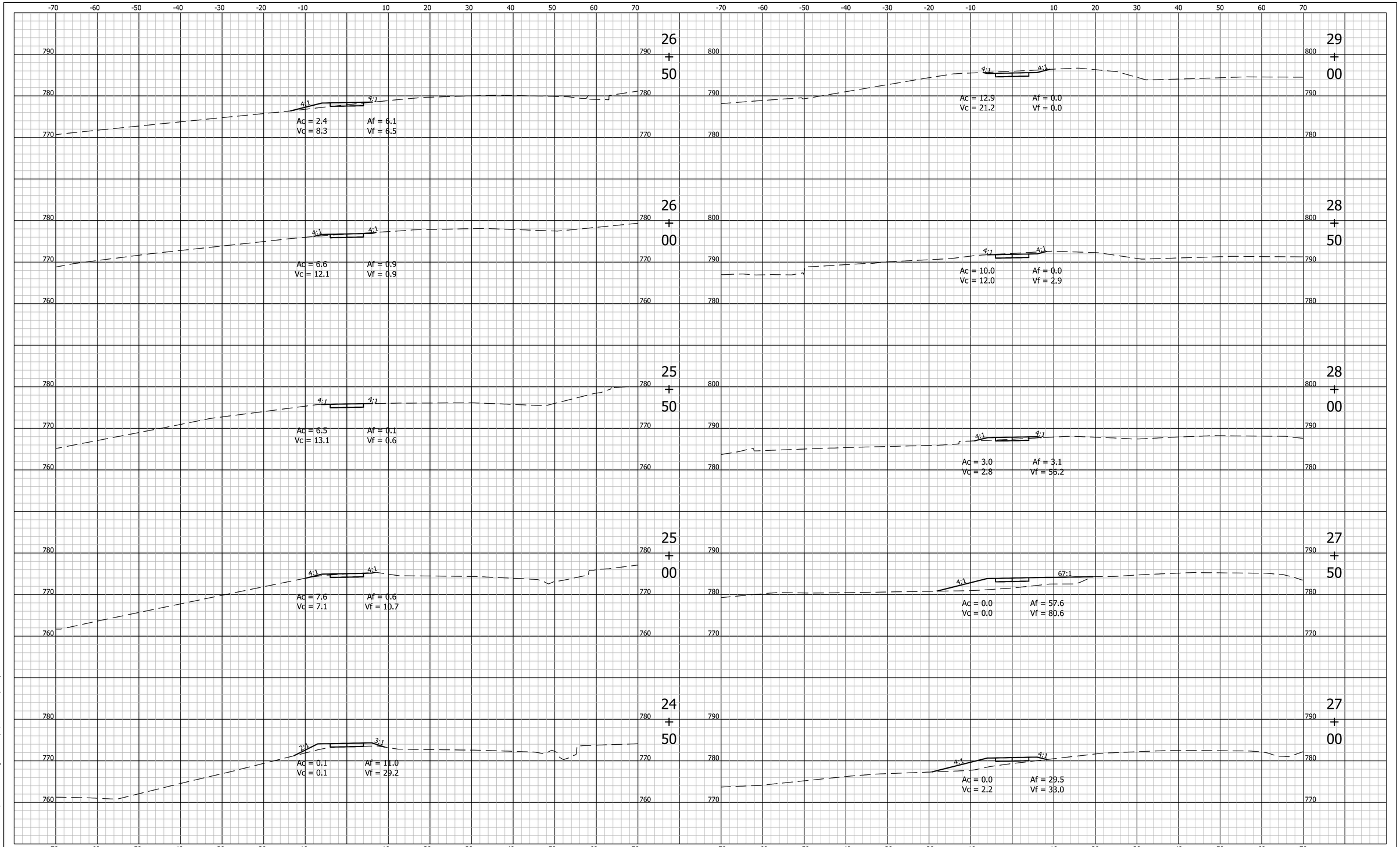

File Name: P:\C3D\12-405\Road\Dwg\Plans Intersection\XSections Path.dwg Plot Date: 4/24/2015 Plotted By: Ross, Caleb

UNITED Consulting
1625 N. Post Road
Indianapolis, IN 46219
Phone 317-895-2585
Fax 317-895-2596
www.ucindy.com

DESIGNED: JRS	DRAWN: JNII
CHECKED: JAR	CHECKED: JRS

THE CITY OF BLOOMINGTON
PATH, INT & SIGNAL IMPROVEMENTS

CROSS SECTIONS
LINE "PATH"

HORIZONTAL SCALE	BRIDGE FILE
1" = 10'	-
VERTICAL SCALE	DESIGNATION
1" = 10'	-
SURVEY BOOK	SHEETS
-	19 of 22
CONTRACT	PROJECT
-	-

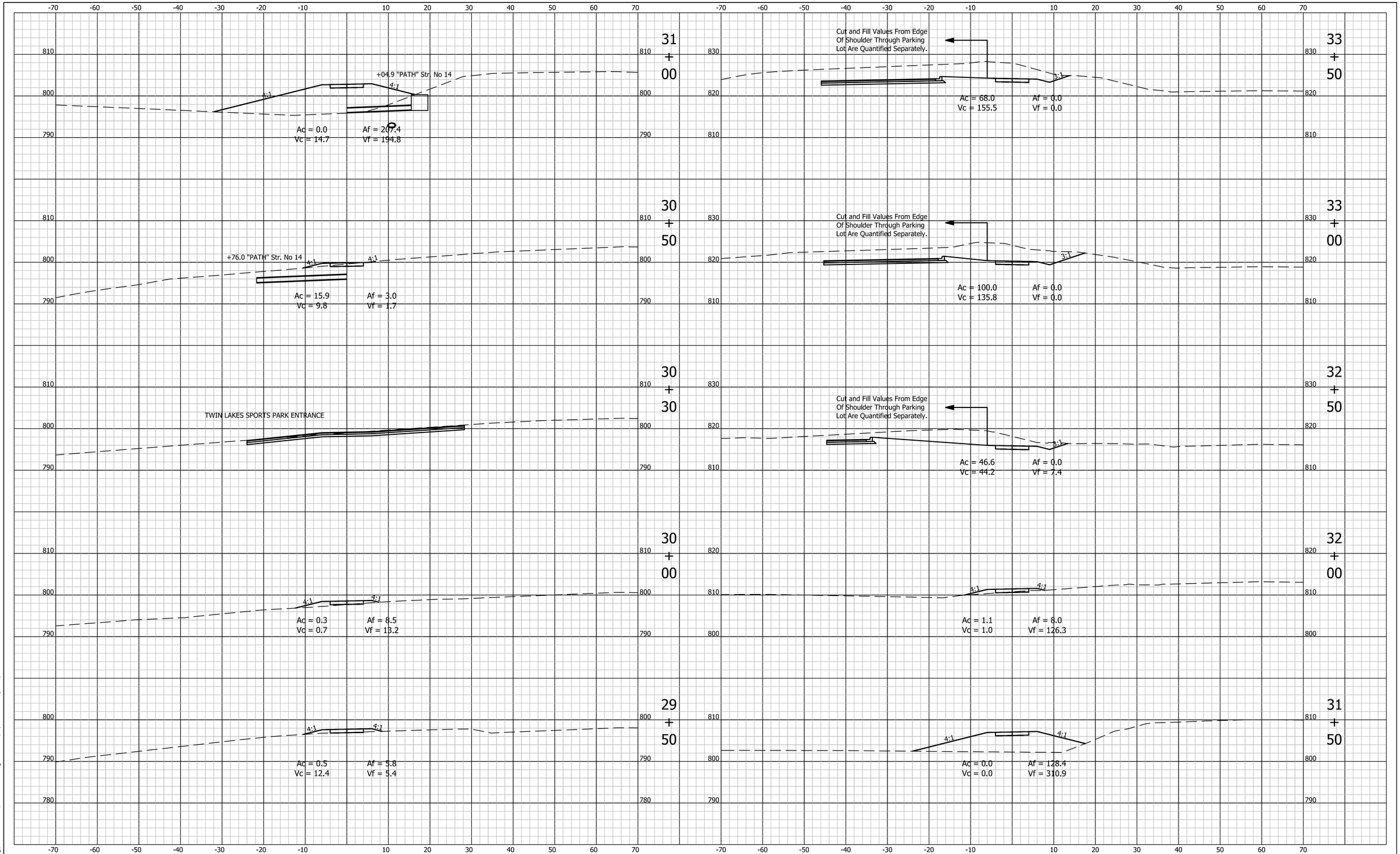

File Name: P:\C3D\12-405\Road\Dwg\Plans Intersection\XSections Path.dwg Plot Date: 4/24/2015 Plotted By: Ross, Caleb

UNITED Consulting
1625 N. Post Road
Indianapolis, IN 46219
Phone 317-895-2585
Fax 317-895-2596
www.ucindy.com

DESIGNED: JRS	DRAWN: JNII	THE CITY OF BLOOMINGTON PATH, INT & SIGNAL IMPROVEMENTS	HORIZONTAL SCALE: 1" = 10' / BRIDGE FILE: - / VERTICAL SCALE: 1" = 10' / DESIGNATION: -
CHECKED: JAR	CHECKED: JRS	CROSS SECTIONS LINE "PATH"	SURVEY BOOK: - / SHEETS: 20 of 22 / CONTRACT: - / PROJECT: -

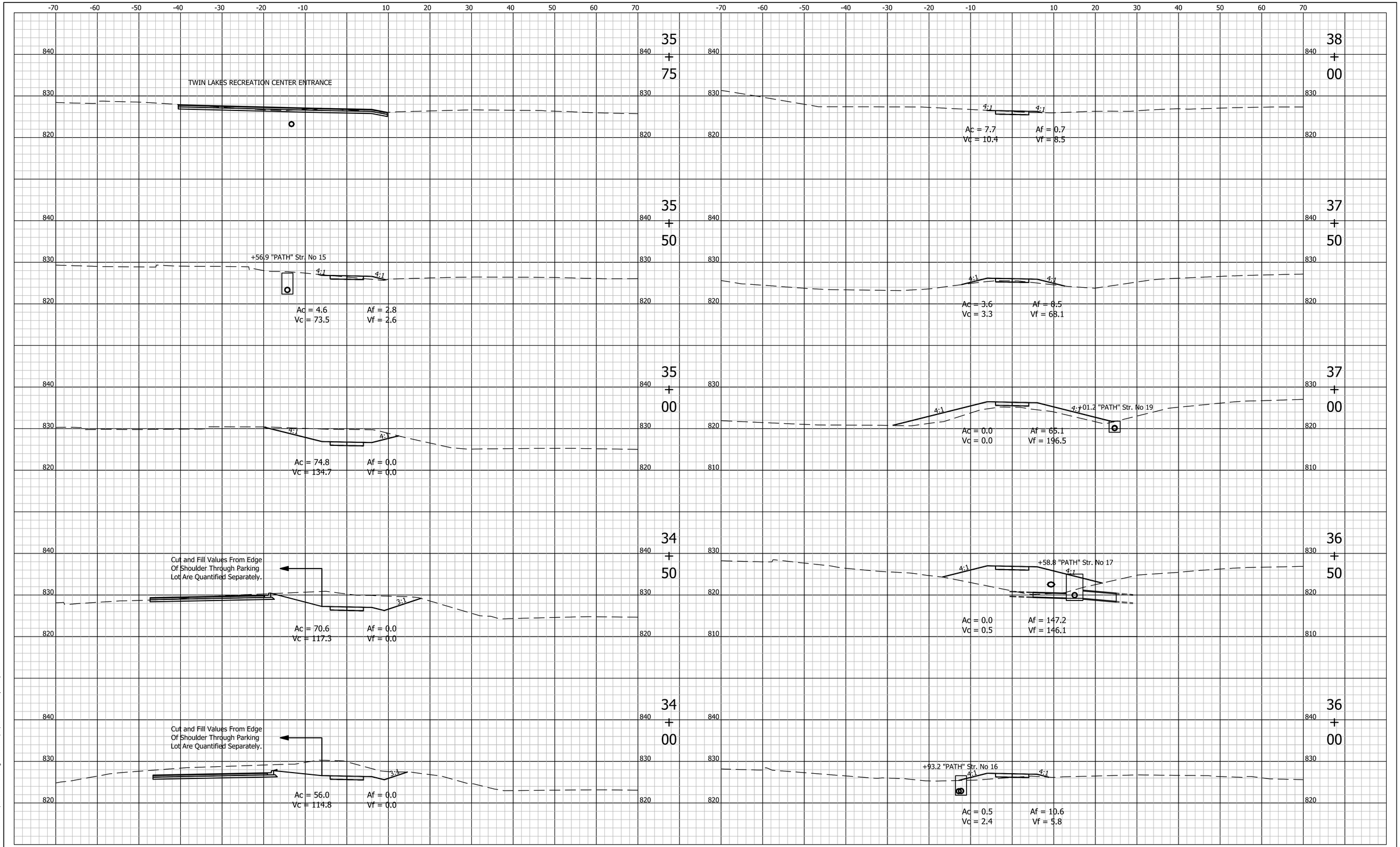

UNITED Consulting
1625 N. Post Road
Indianapolis, IN 46219
Phone 317-895-2585
Fax 317-895-2596
www.ucindy.com

DESIGNED: JRS	DRAWN: JNII
CHECKED: JAR	CHECKED: JRS

THE CITY OF BLOOMINGTON
PATH, INT & SIGNAL IMPROVEMENTS

CROSS SECTIONS
LINE "PATH"

HORIZONTAL SCALE	BRIDGE FILE
1" = 10'	-
VERTICAL SCALE	DESIGNATION
1" = 10'	-
SURVEY BOOK	SHEETS
-	21 of 22
CONTRACT	PROJECT
-	-

File Name: P:\C3D\12-405\Road\Dwg\Plans Intersection\XSections Path.dwg Plot Date: 4/24/2015 Plotted By: Ross, Caleb

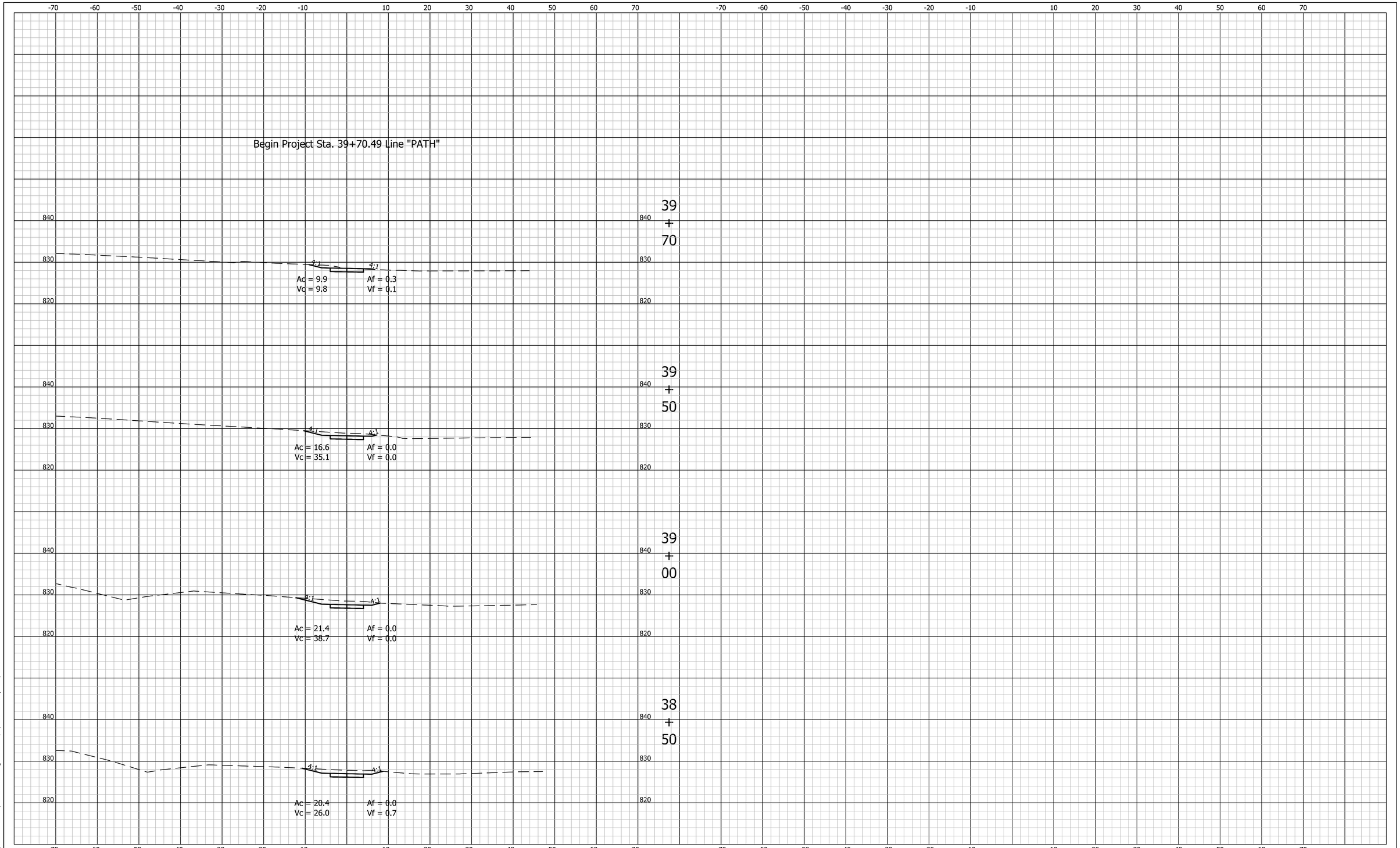

File Name: P:\C3D\12-405\Road\Dwg\Plans Intersection\XSections Path.dwg Plot Date: 4/24/2015 Plotted By: Ross, Caleb

UNITED Consulting
1625 N. Post Road
Indianapolis, IN 46219
Phone 317-895-2585
Fax 317-895-2596
www.ucindy.com

DESIGNED: JRS	DRAWN: JNII
CHECKED: JAR	CHECKED: JRS

THE CITY OF BLOOMINGTON
PATH, INT & SIGNAL IMPROVEMENTS

CROSS SECTIONS
LINE "PATH"

HORIZONTAL SCALE	BRIDGE FILE
1" = 10'	-
VERTICAL SCALE	DESIGNATION
1" = 10'	-
SURVEY BOOK	SHEETS
-	22 of 22
CONTRACT	PROJECT
-	-

2ND. ST. SIDEPATH
PROJECT NO. 400936

PROPOSED:

WEST 2ND STREET SIDEPATH

W. 2ND STREET FROM TWIN LAKES RECREATION CENTER TO LANDMARK BUSINESS CENTER BLOOMINGTON, INDIANA

UTILITY CONTACT INFORMATION

GAS
VECTREN
205 S. MADISON ST,
BLOOMINGTON, IN 47401
DOUG ANDERSON (812)330-4009

SEWER AND WATER
CITY OF BLOOMINGTON UTILITIES
600 E. MILLER DR.
BLOOMINGTON, IN 47402
NANCY AXSOM (812)349-3689

ELECTRIC
DUKE ENERGY
1619 W. DEFFENBAUGH ROAD
KOKOMO, INDIANA 46902
JIM SHIELDS (317)375-2071

TELEPHONE
AT&T
P.O. BOX 56
BLOOMINGTON, IN 47402
BRENT McCABE (812)334-4521

CABLE TELEVISION
COMCAST
2450 SOUTH HENDERSON STREET
BLOOMINGTON, IN 47404
SCOTT TEMPLETON (812)355-7822

UNDERGROUND UTILITY LOCATION
INDIANA UNDERGROUND
PLANT PROTECTION
1-(800)382-5544

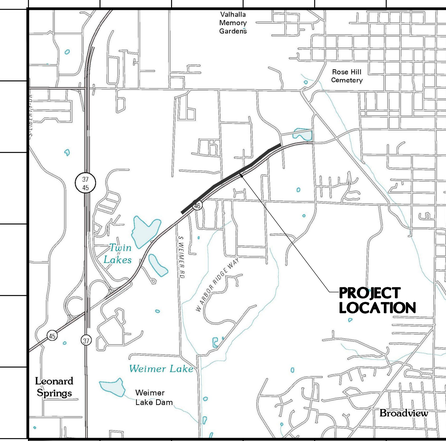

VICINITY/LOCATION MAP
SCALE: 1"=2000'

SHEET INDEX

SHEET NO.	SHEET NO.
C101	GENERAL NOTES & LEGENDS
C201	MISCELLANEOUS DETAILS
C301-C305	LINE 'P-1' PLAN AND PROFILES
C401-C411	LINE 'P-1' CROSS SECTIONS
S-1	RETAINING WALL DETAILS

HOLEY MOLEY SAYS
"DIG SAFELY"

"IT'S THE LAW"
CALL 2 WORKING DAYS BEFORE YOU DIG
1-800-382-5544
CALL TOLL FREE

PER INDIANA STATE LAW IC8-1-26,
IT IS AGAINST THE LAW TO EXCAVATE WITHOUT NOTIFYING THE UNDERGROUND LOCATION SERVICE TWO (2) WORKING DAYS BEFORE COMMENCING WORK.

BYNUM FANYO & ASSOCIATES, INC.
528 North Walnut Street
Bloomington, Indiana 47404 (812) 332-8030

architecture
civil engineering
planning

OWNER/DEVELOPER:
CITY OF BLOOMINGTON
PUBLIC WORKS DEPARTMENT
401 N. MORTON ST.
BLOOMINGTON, IN 47404

THE CURRENT EDITION OF THE INDIANA DEPARTMENT OF TRANSPORTATION, MANUAL ON UNIFORM TRAFFIC CONTROL DEVICES & CITY OF BLOOMINGTON UTILITIES STANDARD SPECIFICATIONS ARE TO BE USED WITH THESE PLANS

JEFFREY S. FANYO No. 18283 STATE OF INDIANA PROFESSIONAL ENGINEER

Certified By:
9-4-12
JEFFREY S. FANYO, P.E.
IND. REG. NO. 18283

Revisions

2ND STREET SIDEPATH
PROJECT NO. 400936

GENERAL LEGEND

PROPERTY LINE	
CONSRUCTION LIMITS	CL
DEED BOOK AND PAGE	XXX/XXX
TO BE REMOVED	T.B.R.
TO REMAIN UNDISTURBED	T.R.U.
SETBACK LINE	X' SBL
PROPOSED 20'x10' DUMPSTER PAD SURROUNDED BY 6' SOLID WOOD FENCE WITH GATE	
PROPOSED ACCESSIBLE PARKING	
SANITARY SEWER EASEMENT	S.S.E.
GAS EASEMENT	G.E.
WATER LINE EASEMENT	W.L.E.
ELECTRIC EASEMENT	E.E.
DRAINAGE EASEMENT	D.E.
UTILITY EASEMENT	U.E.

EXISTING LEGEND

EXISTING FENCE	
EXISTING WATER LINE	X"W
EXISTING OVERHEAD ELECTRIC AND TELEPHONE LINES	OHE+OHT
EXISTING UNDERGROUND ELECTRIC AND TELEPHONE LINES	UGE+UGT
EXISTING UNDERGROUND TELEPHONE LINES	UGT
EXISTING CONTOUR	XXX
FLOW LINE	
EXISTING SANITARY SEWER AND MANHOLE	
EXISTING STORM SEWER AND INLET	
EXISTING SIGN	
EXISTING LIGHT POLE	
EXISTING UTILITY POLE	
EXISTING WATER METER	

SITE LEGEND

A	PROPOSED BITUMINOUS PAVING
B	PROPOSED RESURFACING OF EXISTING SIDEPATH
W	PROPOSED ASPHALT SIDEPATH PAVING
C	PROPOSED CONCRETE PAVING
11	SAWCUT & MATCH EXISTING PAVEMENT
13	PROPOSED 6" STANDING CURB
26	PROPOSED SODDING
R	PROPOSED ACCESSIBLE RAMP, TYPE "G"
RT	PROPOSED SIDEWALK TRANSITION RAMP
F	PROPOSED CONCRETE SIDEWALK
PP	PROPOSED PAVEMENT PATCH
RW	PROPOSED CONCRETE RETAINING WALL, SEE SHEET S-1
RW2	PROPOSED MODULAR BLOCK RETAINING WALL

GENERAL NOTES

- ☒ 1. BOUNDARY AND TOPO BY BYNUM FANYO AND ASSOCIATES, 528 NORTH WALNUT STREET, BLOOMINGTON, INDIANA 47404. PHONE (812) 332-8030
- ☒ 2. DEVELOPER: CITY OF BLOOMINGTON. PUBLIC WORKS, 401 N. MORTON STREET BLOOMINGTON, INDIANA
- ☒ 3. PROJECT ADDRESS: W. 2ND STREET, BLOOMINGTON, INDIANA
- ☒ 4. ALL WORK IS TO BE IN ACCORDANCE WITH ALL STATE AND LOCAL REGULATIONS.
- ☒ 5. ALL PERMITS ARE TO BE OBTAINED BY THE CONTRACTOR PRIOR TO THE START OF CONSTRUCTION.
- ☒ 6. HYDRANT LOCATION SHALL BE APPROVED BY THE LOCAL FIRE MARSHALL.
- ☒ 7. EXISTING UTILITIES ON SITE SHALL BE RELOCATED AS REQUIRED. CONTRACTOR SHALL PAY ALL COSTS ASSOCIATED WITH RELOCATION.
- ☒ 8. SAFE, CLEARLY MARKED PEDESTRIAN AND VEHICULAR ACCESS TO ALL ADJACENT PROPERTIES MUST BE MAINTAINED THROUGHOUT THE CONSTRUCTION PROCESS.

PARKING AND PAVEMENT NOTES

- ☒ 1. ALL SIGNS, PAVEMENT MARKINGS, AND OTHER TRAFFIC CONTROL DEVICES SHALL CONFORM TO THE MANUAL ON UNIFORM TRAFFIC DEVICES, CURRENT EDITION AS AMENDED.
- ☒ 2. ALL PAVEMENT MARKINGS SHALL BE PAINTED WHITE ON ASPHALT PAVEMENT / YELLOW ON CONCRETE PAVEMENT AND SHALL BE FOUR (4) INCHES WIDE UNLESS INDICATED OTHERWISE.
- ☒ 3. ALL DIMENSIONS ARE TO EDGE OF PAVEMENT UNLESS INDICATED OTHERWISE. ALL CURB RADIUS ARE TO BE 5' UNLESS INDICATED OTHERWISE.
- ☒ 4. CONTRACTOR SHALL FURNISH AND INSTALL PAVEMENT MARKINGS AS SHOWN ON THE PLANS.
- ☒ 5. CONTRACTOR SHALL COORDINATE THE INSTALLATION OF ALL SIGNS, PAVEMENT MARKINGS, AND OTHER TRAFFIC CONTROL DEVICES WITH OTHER CONTRACTORS ON THE SITE.
- ☒ 6. JOINTS OR SCORE MARKS ARE TO BE SHARP AND CLEAN WITHOUT SHOWING EDGES OF JOINTING TOOLS.
- ☒ 7. CONTRACTOR SHALL SAW-CUT TIE-INS AT EXISTING CURBS AS NECESSARY TO INSURE SMOOTH TRANSITIONS. CONTRACTOR SHALL SAW-CUT AND TRANSITION TO MEET EXISTING PAVEMENT AS NECESSARY AND AS DIRECTED BY INSPECTOR TO INSURE POSITIVE DRAINAGE. (TYPICAL AT ALL INTERSECTIONS).
- ☒ 8. CONTRACTOR SHALL COMPLY WITH ALL PERTINENT PROVISIONS OF THE "MANUAL OF ACCIDENT PREVENTION IN CONSTRUCTION" ISSUED BY A.G.C. OF AMERICA, INC. AND THE HEALTH AND SAFETY REGULATIONS FOR CONSTRUCTION ISSUED BY THE U.S. DEPARTMENT OF LABOR.

LANDSCAPE NOTES

- ☐ 1. ALL PLANT MATERIAL SHALL ARRIVE ONSITE IN A HEALTHY, VIGOROUS CONDTION AND BE FREE OF PESTS AND DISEASE.
- ☐ 2. ALL PLANTS SHALL BE CONTAINER GROWN OR BALLED AND BURLAPPED AS INDICATED IN THE PLANT LIST.
- ☐ 3. ALL TREES SHALL BE STRAIGHT-TRUNKED, FULL HEADED AND MEET ALL REQUIREMENTS SPECIFIED.
- ☐ 4. ALL TREES SHALL BE GUYED OR STAKED PLUMB AS SHOWN IN THE DETAILS.
- ☐ 5. ALL PLANTING MASS BEDS SHALL BE SPADE CUT UNLESS SPECIFIED WITH A MOW STRIP OR OTHER INSTALL EDGING. TREES TO HAVE A 5' DIAMETER MULCH RING.
- ☐ 6. ALL PLANTING AREAS SHALL BE COMPLETELY MULCHED WHERE SPECIFIED.
- ☒ 7. PRIOR TO CONSTRUCTION, THE CONTRACTOR SHALL BE RESPONSIBLE FOR LOCATING ALL UNDERGROUND UTILITIES AND SHALL AVOID DAMAGE TO ALL UTILITIES DURING THE COURSE OF THE WORK. THE CONTRACTOR IS RESPONSIBLE FOR REPAIRING ANY AND ALL DAMAGE TO UTILITIES, STRUCTURES, SITE APPURTENANCES, ETC. WHICH OCCURS AS A RESULT OF THE LANDSCAPE CONSTRUCTION. PLANTING LOCATIONS MAY REQUIRE ADJUSTMENTS IN FIELD TO AVOID OVERHEAD AND UNDERGROUND UTILITIES.
- ☐ 8. THE CONTRACTOR IS RESPONSIBLE FOR VERIFYING ALL QUANTITIES AND SPECIES SHOWN ON THESE PLANS BEFORE PRICING THE WORK.
- ☒ 9. THE CONTRACTOR IS RESPONSIBLE FOR FULLY MAINTAINING ALL PLANTING AND LAWN AREAS INCLUDING, BUT NOT LIMITED TO: WATERING, SPRAYING, MULCHING, PRUNING, FERTILIZING, ETC., UNTIL WORK IS ACCEPTED IN FULL BY THE OWNER.
- ☒ 10. THE CONTRACTOR SHALL COMPLETELY GUARANTEE ALL PLANT MATERIAL FOR A PERIOD OF ONE (1) YEAR BEGINNING ON THE DATE OF TOTAL ACCEPTANCE. THE CONTRACTOR SHALL PROMPTLY MAKE ALL REPLACEMENTS BEFORE OR AT THE END OF THE GUARANTEE PERIOD.
- ☐ 11. THE OWNER SHALL APPROVE THE STAKING LOCATION OF ALL PLANT MATERIAL PRIOR TO INSTALLATION.
- ☐ 12. AFTER BEING DUG AT THE NURSERY SOURCE, ALL TREES IN LEAF SHALL BE ACCLIMATED FOR TWO (2) WEEKS UNDER A MIST OR DRIP IRRIGATION SYSTEM PRIOR TO INSTALLATION. WATER ALL SPECIMENS WITHIN 24 HOURS OF PLANTING.
- ☐ 13. ANY NEW OR TRANSPLANTED PLANT MATERIAL WHICH DIES, TURNS BROWN OR DEFOLIATES PRIOR TO TOTAL ACCEPTANCE OF THE WORK SHALL BE PROMPTLY REMOVED FROM THE SITE AND REPLACED WITH MATERIAL OF THE SAME SPECIES, QUANTITY AND SIZE TO MEET ALL PLANT LIST SPECIFICATIONS.
- ☐ 14. STANDARDS SET FORTH IN "AMERICAN STANDARD FOR NURSERY STOCK" REPRESENT GUIDELINE SPECIFICATIONS ONLY AND SHALL CONSTITUTE MINIMUM QUALITY REQUIREMENTS FOR PLANT MATERIAL.
- ☐ 15. ALL SHRUB, GROUNDCOVER, ANNUAL AND HERBACEOUS PERENNIAL PLANTING BEDS ARE TO BE COMPLETELY COVERED WITH HARDWOOD MULCH TO A MINIMUM DEPTH OF FOUR INCHES.
- ☐ 16. DURING THE GROWING SEASON ALL ANNUALS AND HERBACEOUS PERENNIALS SHALL REMAIN IN A HEALTHY CONDITION THROUGHOUT THE CONSTRUCTION PERIOD.
- ☐ 17. ALL PLANT MATERIAL QUANTITIES SHOWN ARE APPROXIMATE. CONTRACTOR SHALL BE RESPONSIBLE FOR COMPLETE COVERAGE OF ALL PLANTING BEDS AT SPACING SHOWN ON PLANS.
- ☒ 19. ALL DISTURBED AREAS NOT INCLUDED IN LANDSCAPE MULCH BEDS ARE TO BE DEBRIS-RAKED AND FINED-GRADED AS NEEDED, THEN MULCH SEEDED (OR SODDED, PER PLAN) AND WATERED UNTIL A HEALTHY STAND OF TURF IS ESTABLISHED.
- ☐ 20. ANY PLANT OR OTHER LANDSCAPE MATERIAL SUBSTITUTIONS INSTALLED WITHOUT DESIGNER AND/OR OWNER APPROVAL SHALL BE REPLACED AT CONTRACTOR'S EXPENSE. ALL PLANTS ARE SUBJECT TO THE APPROVAL OF THE OWNER BEFORE, DURING AND AFTER INSTALLATION.

GRADING NOTES

- ☐ 1. NEW FINISHED CONTOURS SHOWN ARE TOP OF FUTURE PAVING IN AREAS TO RECEIVE PAVEMENT AND TOP OF TOPSOIL IN AREAS TO BE SEEDED OR PLANTED.
- ☐ 2. AREAS OUTSIDE OF THE PARKING LOT PERIMETERS SHOWN TO BE SEEDED OR PLANTED SHALL RECEIVE 6" OF TOPSOIL. THIS TOPSOIL IS TO BE PLACED AND LEVELED BY THE CONTRACTOR.
- ☒ 3. CONTRACTOR SHALL NOTIFY AND COOPERATE WITH ALL UTILITY COMPANIES OR FIRMS HAVING FACILITIES ON OR ADJACENT TO THE SITE BEFORE DISTURBING, ALTERING, REMOVING, RELOCATING, ADJUSTING, OR CONNECTING TO SAID FACILITIES. CONTRACTOR SHALL PAY ALL COSTS IN CONNECTION WITH ALTERATION OF OR RELOCATION OF THE FACILITY.
- ☒ 4. ALL AREAS NOT COVERED BY BUILDING OR PAVING ARE TO BE VEGETATED (SEEDED OR PER LANDSCAPE PLAN).
- ☒ 5. UNUSABLE EXCAVATED MATERIALS AND ALL WASTE RESULTING FROM CLEARING AND GRUBBING SHALL BE DISPOSED OF OFF SITE BY CONTRACTOR.
- ☒ 6. ALL EXCAVATING IS UNCLASSIFIED AND SHALL INCLUDE ALL MATERIALS ENCOUNTERED.
- ☒ 7. BEFORE ANY MACHINE WORK IS DONE, CONTRACTOR SHALL STAKE OUT AND MARK THE ITEMS ESTABLISHED BY THE SITE PLAN. CONTROL POINTS SHALL BE PRESERVED AT ALL TIMES DURING THE COURSE OF CONSTRUCTION. THE LACK OF PROPER WORKING POINTS AND GRADE STAKES MAY REQUIRE CESSATION OF OPERATIONS UNTIL SUCH POINTS AND GRADES HAVE BEEN PLACED TO THE OWNER'S SATISFACTION.
- ☐ 8. CONTRACTOR SHALL COMPACT AND MAINTAIN A 30,000 SQ. FT. STONEBASE CONSTRUCTION LAYDOWN AREA W/ STONE ACCESS FROM THE CONSTRUCTION ENTRANCE AND STONE ACCESS TO THE BUILDING PAD.
- ☒ 9. THESE DOCUMENTS ARE SCHEMATIC IN NATURE AND CANNOT SHOW EVERY ITEM NEEDED FOR A COMPLETE OPERATIONAL STORM SYSTEM. THE CONTRACTOR SHALL BE RESPONSIBLE FOR PROVIDING A COMPLETE OPERATING STORM SYSTEM.
- ☒ 10. ALL FILL SHALL BE FREE OF VEGETABLE MATTER, RUBBISH, LARGE ROCK, AND OTHER DELETERIOUS MATERIAL. THE FILL MATERIAL SHOULD BE PLACED IN LAYERS NOT TO EXCEED SIX (6) INCHES IN LOOSE THICKNESS AND SHOULD BE SPRINKLED WITH WATER AS REQUIRED TO SECURE SPECIFIED COMPACTION. EACH LAYER SHOULD BE UNIFORMLY COMPACTED BY MEANS OF SUITABLE EQUIPMENT AS DICTATED BY THE TYPE OF FILL MATERIAL. UNDER NO CIRCUMSTANCES SHOULD A BULLDOZER OR SIMILARLY TRACKED VEHICLE BE USED AS COMPACTING EQUIPMENT. MATERIAL CONTAINING AN EXCESS OF WATER SHOULD BE SPREAD AND DRIED TO A MOISTURE CONTENT THAT WILL PERMIT PROPER COMPACTION. ALL FILL SHOULD BE COMPACTED TO THE SPECIFIED PERCENTAGE OF THE MAXIMUM DENSITY OBTAINED IN ACCORDANCE WITH ASTM DENSITY TEST D-698 (95 PERCENT OF MAXIMUM DRY DENSITY). IF THE SPECIFIED COMPACTION LIMITS ARE NOT MET, SUCH AREAS SHOULD BE REWORKED AND RETESTED AS REQUIRED UNTIL THE SPECIFIED LIMITS ARE REACHED.

ON-SITE UTILITY NOTES

- ☐ 1. ALL WATER PIPE 6" AND LARGER SHALL BE PRESSURE CLASS 350 DIP WATER PIPE CONFORMING TO ALL STATE AND LOCAL STANDARDS.
- ☐ 2. WATER MAIN FITTINGS 6" AND LARGER SHALL BE DUCTILE IRON CONFORMING TO AWWA/ANSI STANDARD SPECIFICATIONS C153/A21.53, LATEST REVISION.
- ☐ 3. 2" WATER MAINS SHALL BE SDR-21 (PR200) AND 4" PIPE MAY BE EITHER SDR-21 (PR200) OR C900 (DR-14).
- ☐ 4. ALL WATER SERVICE LINES CONNECTING TO 2" PVC MAINS SHALL BE 1" TYPE "K" COPPER. ALL SERVICE LINES FROM MAIN TO METER SHALL BE TYPE "K" COPPER WITH FLARED ENDS.
- ☐ 5. MECHANICAL RESTRAINTS SHALL BE PROVIDED AT ALL WATER LINE BENDS, OFFSETS, TEES, PLUGS, ETC...
- ☐ 6. ALL WATER LINE GATE VALVES OTHER THAN AIR RELEASE VALVES AND TAPPING VALVES SHALL BE CAST IRON BODY, FULLY BRONZE MOUNTED, WITH RESILIENT SEAT AND NON-RISING STEM AND SHALL BE MANUFACTURED BY M & H VALVE COMPANY, DARLING VALVE AND MANUFACTURING COMPANY, KENNEDY VALVE COMPANY, OR MUELLER COMPANY.
- ☐ 7. FLUSH HYDRANTS SHALL BE PLACED AT THE ENDS OF ALL WATER MAINS AND AT ANY HIGH POINTS IN THE LINE.
- ☐ 8. AIR RELEASE VALVES SHALL BE PROVIDED AT ALL HIGH POINTS OF WATER MAINS AND SHALL BE VAL-MATIC BRAND AND SHALL INCORPORATE THE OPTIONAL VACUUM-CHECK FEATURE.
- ☐ 9. ALL FIRE HYDRANTS SHALL BE MANUFACTURED BY KENNEDY GUARDIAN OR MUELLER CENTURION.
- ☐ 10. ALL WATER MAINS SHALL BE HYDROSTATICALLY TESTED AND DISINFECTED BEFORE ACCEPTANCE. SEE SITE WORK SPECIFICATIONS.
- ☐ 11. WATER AND SANITARY SEWER MAINS SHALL HAVE A MINIMUM COVER OF 4'-0" ABOVE TOP OF PIPE.
- ☐ 12. ALL SPRINKLER, DOMESTIC, AND SANITARY LEADS TO THE BUILDING SHALL END AS SHOWN ON PLAN AND SHALL BE PROVIDED WITH A TEMPORARY PLUG AT THE END (FOR OTHERS TO REMOVE AND EXTEND AS NECESSARY).
- ☒ 13. THE MINIMUM HORIZONTAL SEPARATION BETWEEN THE CLOSEST TWO POINTS OF THE WATER AND SEWER LINE IS TEN FEET (10'). THE MINIMUM VERTICAL SEPARATION BETWEEN THE CLOSEST TWO POINTS OF THE WATER AND SEWER LINE IS EIGHTEEN INCHES (18").
- ☐ 14. GRAVITY SANITARY SEWER PIPE 6" TO 15" SHALL BE CONSTRUCTED OF SDR-35 PVC.
- ☐ 15. THE UPSTREAM ENDS OF ALL SANITARY SEWER LATERALS SHALL BE CLEARLY MARKED WITH A 4x4 TREATED POST EXTENDING 3' BELOW GRADE AND 1' ABOVE GRADE.
- ☒ 16. ALL TRENCHING, PIPE LAYING, AND BACKFILLING SHALL BE IN ACCORDANCE WITH FEDERAL OSHA REGULATIONS.
- ☒ 17. SEE SITE SPECIFICATIONS FOR BACKFILLING AND COMPACTION REQUIREMENTS.
- ☒ 18. SITE CONTRACTOR SHALL HAVE APPROVAL OF ALL GOVERNING AGENCIES HAVING JURISDICTION OVER THIS SYSTEM PRIOR TO INSTALLATION.
- ☒ 19. ALL WORK ON THIS PLAN SHALL BE DONE IN STRICT ACCORDANCE WITH SITE WORK SPECIFICATIONS.
- ☒ 20. ALL CATCH BASIN GRATE AND FRAMES ARE TO BE BY EAST JORDAN IRON WORKS.
- ☒ 21. LOCATIONS OF EXISTING BURIED UTILITY LINES SHOWN ON THE PLANS ARE BASED UPON BEST AVAILABLE INFORMATION AND ARE TO BE CONSIDERED APPROXIMATE. IT SHALL BE THE RESPONSIBILITY OF THE CONTRACTOR TO VERIFY THE LOCATIONS OF UTILITY LINES ADJACENT TO THE WORK AREA. THE CONTRACTOR IS RESPONSIBLE FOR THE PROTECTION OF ALL UTILITY LINES DURING THE CONSTRUCTION PERIOD.
- ☐ 22. BUILDING CONTRACTOR SHALL PROVIDE & INSTALL A PERMANENT INDICATING VALVE 12" ABOVE THE FLOOR ON THE FIRE LINE AT THE TERMINATION POINT. THIS VALVE WILL BE USED TO HYDROSTATIC PRESSURE TEST AGAINST & WILL REMAIN AS PART OF THE SYSTEM ONCE ALL TESTING IS COMPLETED. THE FIRE LINE MAIN WILL NOT BE DISMANTLED FOR CONNECTION TO THE FIRE SUPPRESSION SYSTEM. SITE CONTRACTOR SHALL COORDINATE THE INSTALLATION OF THE FIRE MAIN WITH THE BUILDING CONTRACTOR.
- ☒ 23. ALL PROJECTS WILL REQUIRE A PRE-CONSTRUCTION MEETING WITH THE CITY OF BLOOMINGTON UTILITIES PRIOR TO THE START OF CONSTRUCTION. THE CONTRACTOR AND/OR DEVELOPER MUST CONTACT JAKE DODDS AT (812)349-3633 TO SCHEDULE THE MEETING.
- ☒ 24. CONTRACTOR SHALL NOTIFY THE CITY OF BLOOMINGTON UTILITIES ENGINEERING DEPARTMENT ONE (1) WORKING DAY PRIOR TO CONSTRUCTION OF ANY WATER, STORM OR SANITARY SEWER UTILITY WORK. A CBU INSPECTOR MUST HAVE NOTICE SO WORK CAN BE INSPECTED, DOCUMENTED, AND PROPER AS-BUILT MADE. WHEN A CONTRACTOR WORKS WEEKENDS, A CBU DESIGNATED HOLIDAY, OR BEYOND NORMAL CBU WORK HOURS, THE CONTRACTOR WILL PAY FOR THE INSPECTOR'S OVERTIME. FOR CBU WORK HOURS AND HOLIDAY INFORMATION, PLEASE CONTACT THE CITY OF BLOOMINGTON UTILITIES ENGINEERING DEPARTMENT AT (812)349-3660.

NOTE: ONLY NOTES ON THIS SHEET MARKED WITH AN ☒ APPLY TO THIS PROJECT.

NOTE TO CONTRACTOR

CONTRACTOR SHALL VERIFY ALL UTILITY LOCATIONS & DEPTHS AND NOTIFY ENGINEER OF ANY INACCURACIES IN LOCATION OR ELEVATION OR ANY CONFLICTS PRIOR TO & AFTER ANY EXCAVATION. NO PAYMENT SHALL BE MADE TO CONTRACTOR FOR UTILITY DESTRUCTION OR UNDERGROUND CHANGES REQUIRED DUE TO CONFLICTING ELEVATIONS.

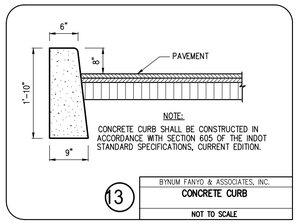

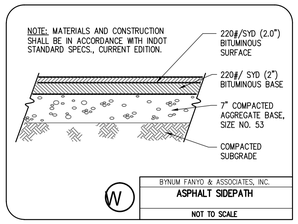

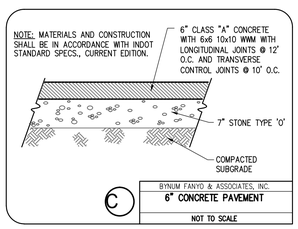

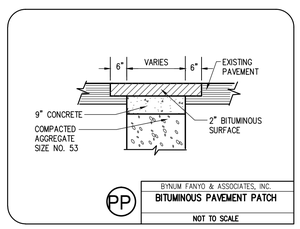

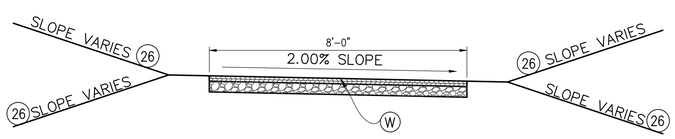

TYPICAL SECTION

NOT TO SCALE

revisions:
Rev 10-11-12 - JR

ARCHITECTURE
CIVIL ENGINEERING
PLANNING
BYNUM FANYO & ASSOCIATES, INC.
528 north walnut street
(812) 332-8030
bloomington, indiana
(812) 339-2990 (Fax)

JEFFREY S. FANYO
No. 18283
STATE OF INDIANA
PROFESSIONAL ENGINEER
9-4-12

certified by: JF

PROPOSED
WEST 2ND STREET SIDEPATH
W. 2ND STREET
BLOOMINGTON, INDIANA

title: GENERAL NOTES & LEGENDS

designed by: RC
drawn by: DAB
checked by: JF
sheet no: C101
project no.: 400936

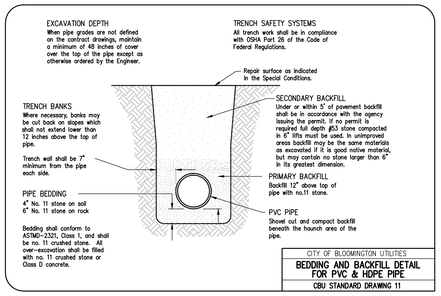

CITY OF BLOOMINGTON UTILITIES
BEDDING AND BACKFILL DETAIL FOR PVC & HDPE PIPE
CBU STANDARD DRAWING 11

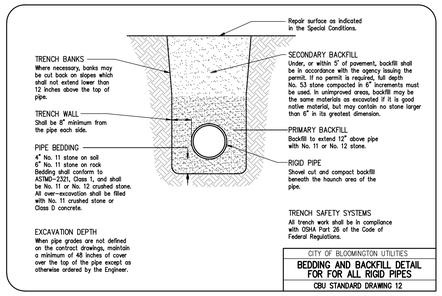

CITY OF BLOOMINGTON UTILITIES
BEDDING AND BACKFILL DETAIL FOR FOR ALL RIGID PIPES
CBU STANDARD DRAWING 12

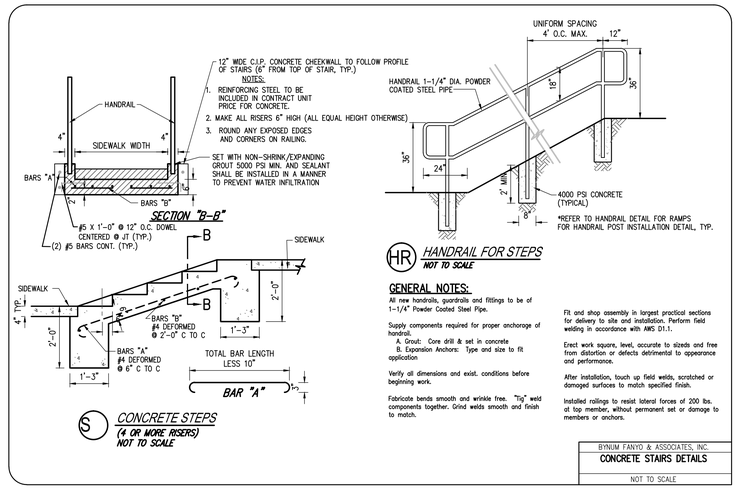

BYNUM FANYO & ASSOCIATES, INC.
CONCRETE STAIRS DETAILS
NOT TO SCALE

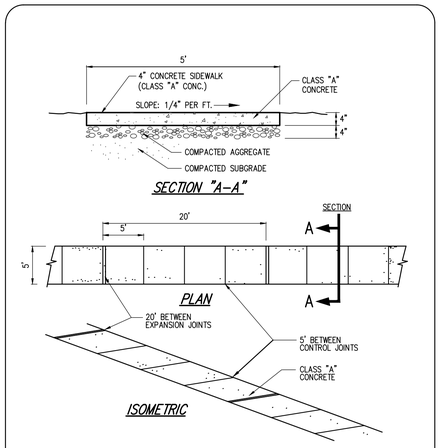

BYNUM FANYO & ASSOCIATES, INC.
CONCRETE SIDEWALK
NOT TO SCALE

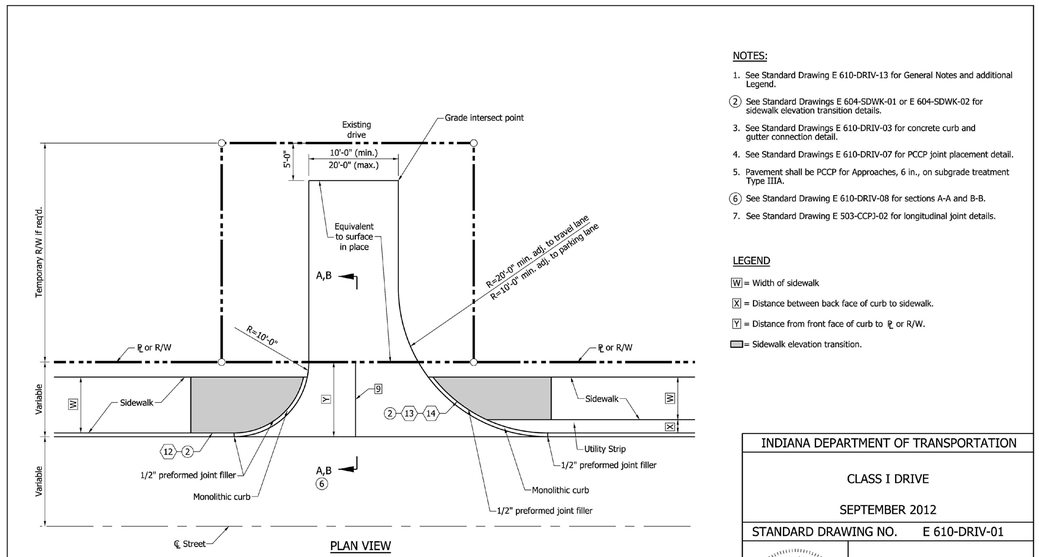

NOTES:

1. See Standard Drawing E 610-DRIV-13 for General Notes and additional Legend.
2. See Standard Drawings E 604-SDWK-01 or E 604-SDWK-02 for sidewalk elevation transition details.
3. See Standard Drawings E 610-DRIV-03 for concrete curb and gutter connection detail.
4. See Standard Drawings E 610-DRIV-07 for PCCP joint placement detail.
5. Pavement shall be PCCP for Approaches, 6 in., on subgrade treatment Type IIIA.
6. See Standard Drawing E 610-DRIV-08 for sections A-A and B-B.
7. See Standard Drawing E 503-CCPJ-02 for longitudinal joint details.

LEGEND

W = Width of sidewalk

X = Distance between back face of curb to sidewalk.

Y = Distance from front face of curb to ℄ or R/W.

= Sidewalk elevation transition.

INDIANA DEPARTMENT OF TRANSPORTATION
CLASS I DRIVE
SEPTEMBER 2012
STANDARD DRAWING NO. E 610-DRIV-01

RICHARD L. VANCLEAVE REGISTERED No. 9750 STATE OF INDIANA PROFESSIONAL ENGINEER

/s/ Richard L. VanCleave 09/04/12
SUPERVISOR, ROADWAY STANDARDS DATE

/s/ Mark A. Miller 09/04/12
CHIEF ENGINEER DATE

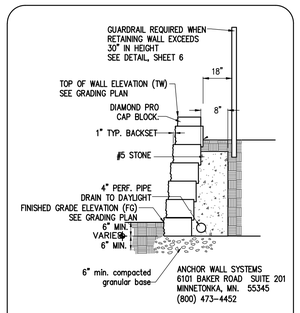

MODULAR BLOCK RETAINING WALL FOR WALLS UP TO 3' IN HEIGHT
NOT TO SCALE

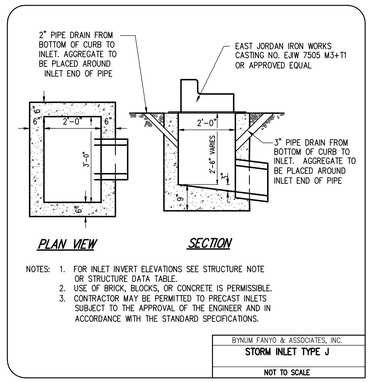

NOTES:
1. FOR INLET INVERT ELEVATIONS SEE STRUCTURE NOTE OR STRUCTURE DATA TABLE.
2. USE OF BRICK, BLOCKS, OR CONCRETE IS PERMISSIBLE.
3. CONTRACTOR MAY BE PERMITTED TO PRECAST INLETS SUBJECT TO THE APPROVAL OF THE ENGINEER AND IN ACCORDANCE WITH THE STANDARD SPECIFICATIONS.

BYNUM FANYO & ASSOCIATES, INC.
STORM INLET TYPE J
NOT TO SCALE

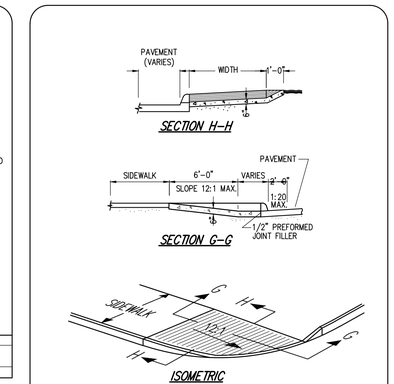

BYNUM FANYO & ASSOCIATES, INC.
CONCRETE SIDEWALK TRANSITION RAMP
NOT TO SCALE

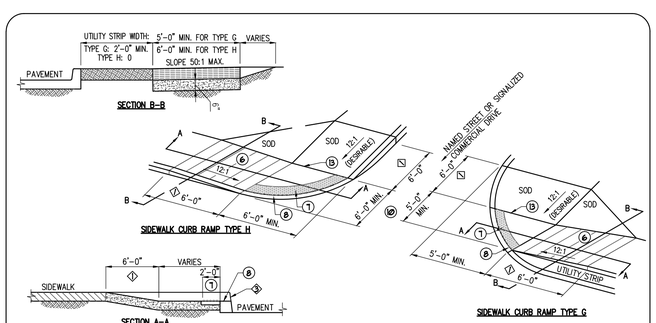

NOTES:

6. SEE STANDARD DRAWING E 604-SWCR-02 FOR GROOVE DETAILS.
7. SEE STANDARD DRAWING E 604-SWCR-02 FOR DETAILS OF THE DETECTABLE WARNING SURFACE
8. SEE STANDARD DRAWING E 604-SWCR-02 FOR ALTERNATE CURB CONSTRUCTION.
10. SIDEWALK ACROSS APPROACH SHALL BE SLOPED AT 50:1 MAXIMUM TRANSVERSELY.
11. SEE STANDARD DRAWING E 604-SWCR-02 FOR TYPICAL RAMP CONSTRUCTION DETAIL.
12. SEE STANDARD DRAWING E 604-SWCR-01 AND -02 FOR LOCATION PLAN AND GENERAL NOTES RESPECTIVELY.
13. VERTICAL FACE CURB OPTIONAL.

INDIANA DEPARTMENT OF TRANSPORTATION
SIDEWALK CURB RAMPS TYPE G AND TYPE H
STANDARD DRAWING NO. E 604-SWCR-09

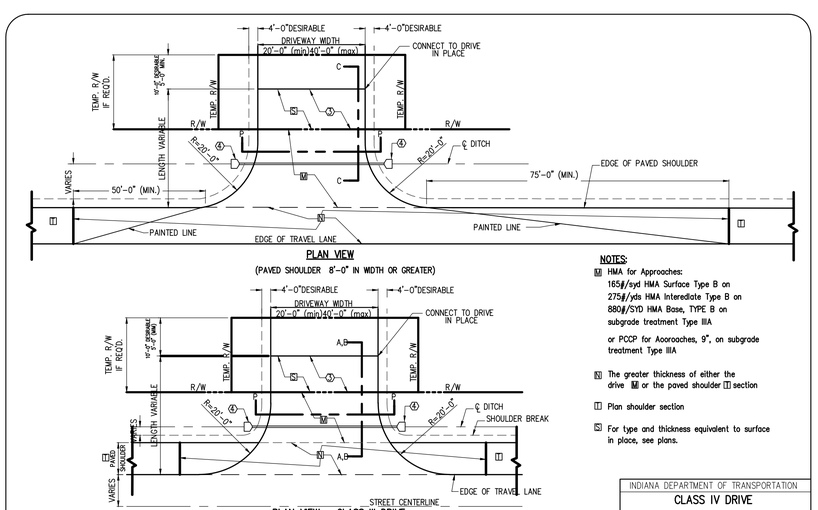

NOTES:

M HMA for Approaches:
165#/syd HMA Surface Type B on
275#/yds HMA Intereditate Type B on
880#/SYD HMA Base, TYPE B on subgrade treatment Type IIIA

or PCCP for Aooroaches, 9", on subgrade treatment Type IIIA

N The greater thickness of either the drive M or the paved shoulder T section

T Plan shoulder section

S For type and thickness equivalent to surface in place, see plans.

INDIANA DEPARTMENT OF TRANSPORTATION
CLASS IV DRIVE
SEPTEMBER 2010
STANDARD DRAWING NO. E 610-DRIV-04

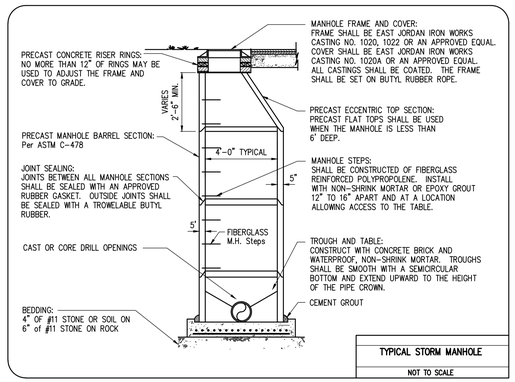

TYPICAL STORM MANHOLE
NOT TO SCALE

NOTE TO CONTRACTOR

CONTRACTOR SHALL VERIFY ALL UTILITY LOCATIONS & DEPTHS AND NOTIFY ENGINEER OF ANY INACCURACIES IN LOCATION OR ELEVATION OR ANY CONFLICTS PRIOR TO & AFTER ANY EXCAVATION. NO PAYMENT SHALL BE MADE TO CONTRACTOR FOR UTILITY DESTRUCTION OR UNDERGROUND CHANGES REQUIRED DUE TO CONFLICTING ELEVATIONS.

revisions:
Rev 10-11-12 – JR

ARCHITECTURE
CIVIL ENGINEERING
PLANNING
BYNUM FANYO & ASSOCIATES, INC.
bloomington, indiana
(812) 339-2990 (Fax)
528 north walnut street
(812) 332-8030

JEFFREY S. FANYO REGISTERED No. 18283 STATE OF INDIANA PROFESSIONAL ENGINEER 9-4-12
certified by:

PROPOSED
WEST 2ND STREET SIDEPATH
W. 2ND STREET
BLOOMINGTON, INDIANA

title: MISCELLANEOUS DETAILS

designed by: RC
drawn by: RC,JR
checked by: JSF
sheet no: C201
project no.: 400936

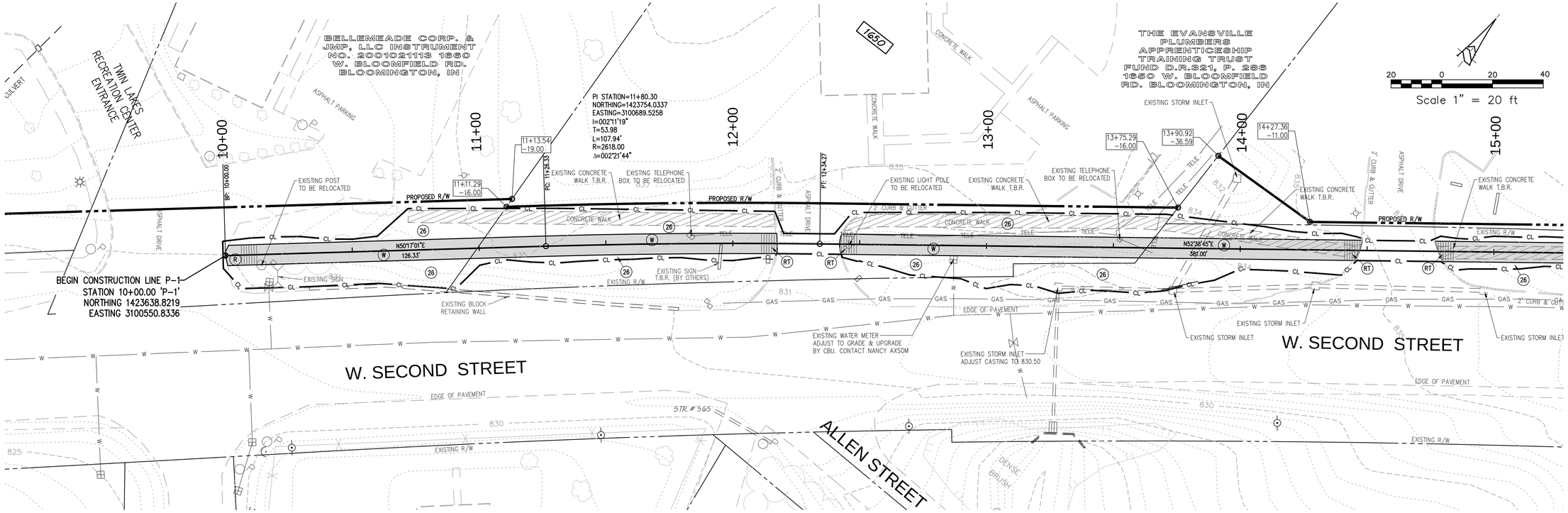

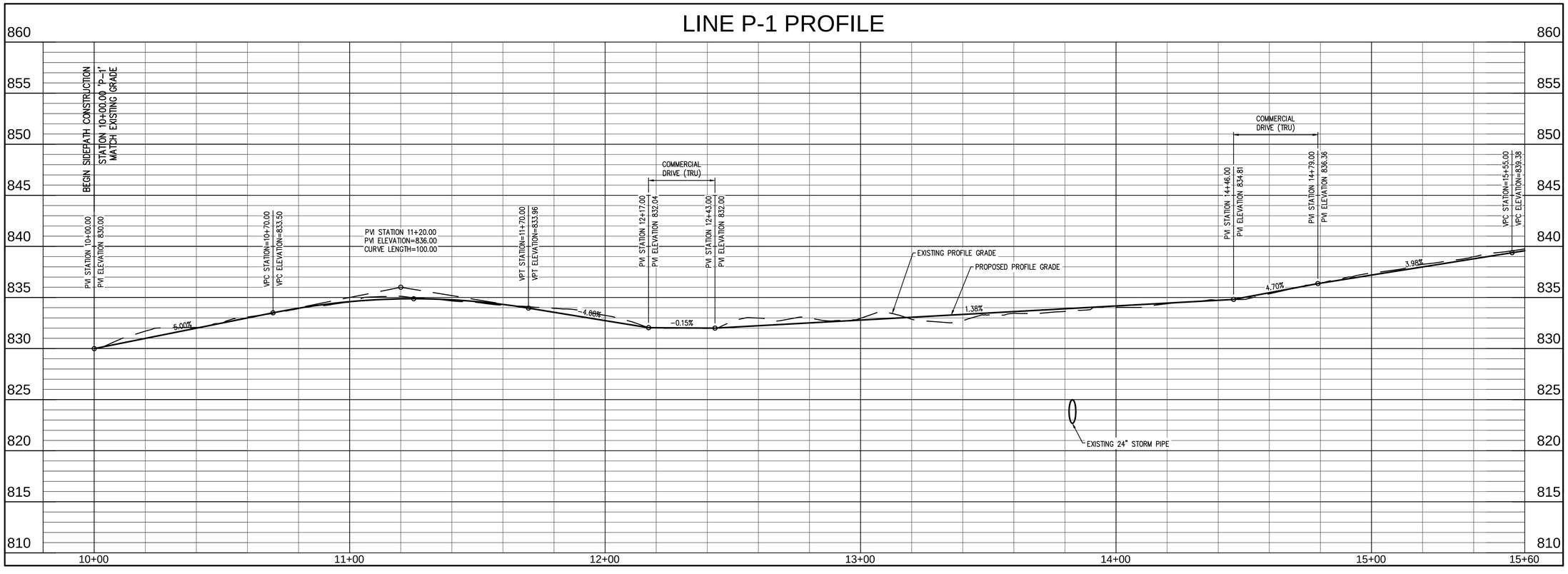

revisions:
Rev 10-11-12 - JR

ARCHITECTURE
CIVIL ENGINEERING
PLANNING
BYNUM FANYO & ASSOCIATES, INC.
528 north walnut street
(812) 332-8030
bloomington, indiana
(812) 339-2990 (Fax)

JEFFREY S. FANYO
No. 18283
STATE OF INDIANA
PROFESSIONAL ENGINEER
9-4-12
certified by:

PROPOSED
WEST 2ND STREET SIDEPATH
W. 2ND STREET
BLOOMINGTON, INDIANA

title: LINE 'P-1' PLAN & PROFILE

designed by: RC
drawn by: RC,JR
checked by: JSF
sheet no: C301
project no.: 400936

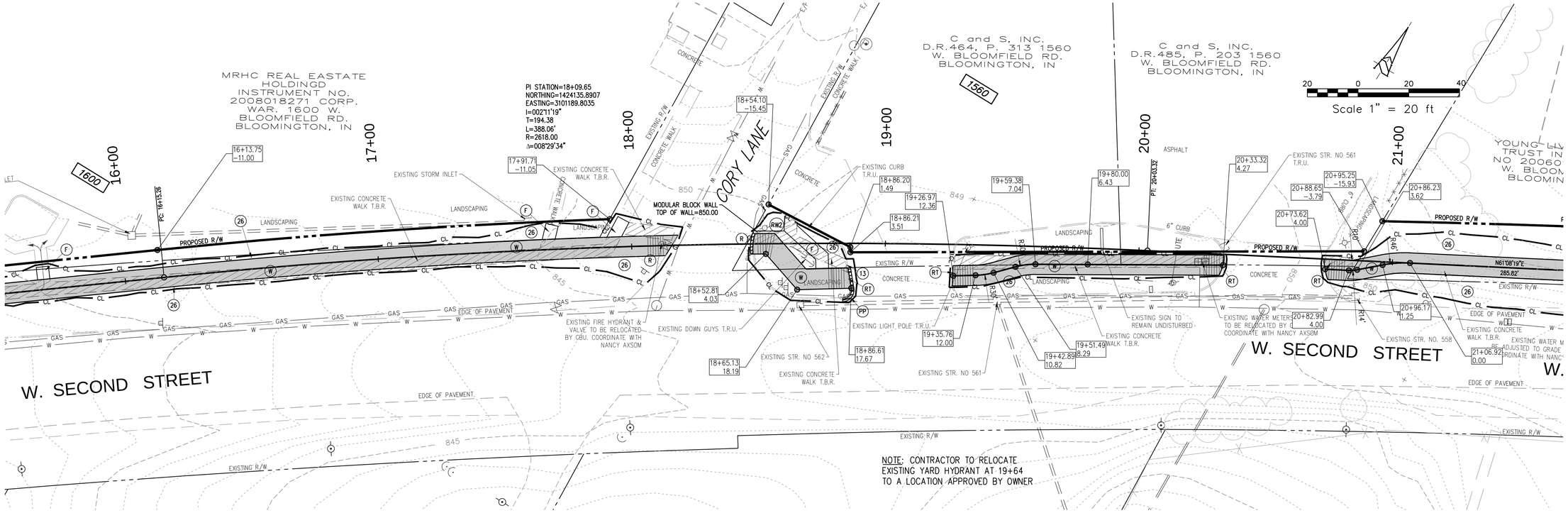

LINE P-1 PROFILE

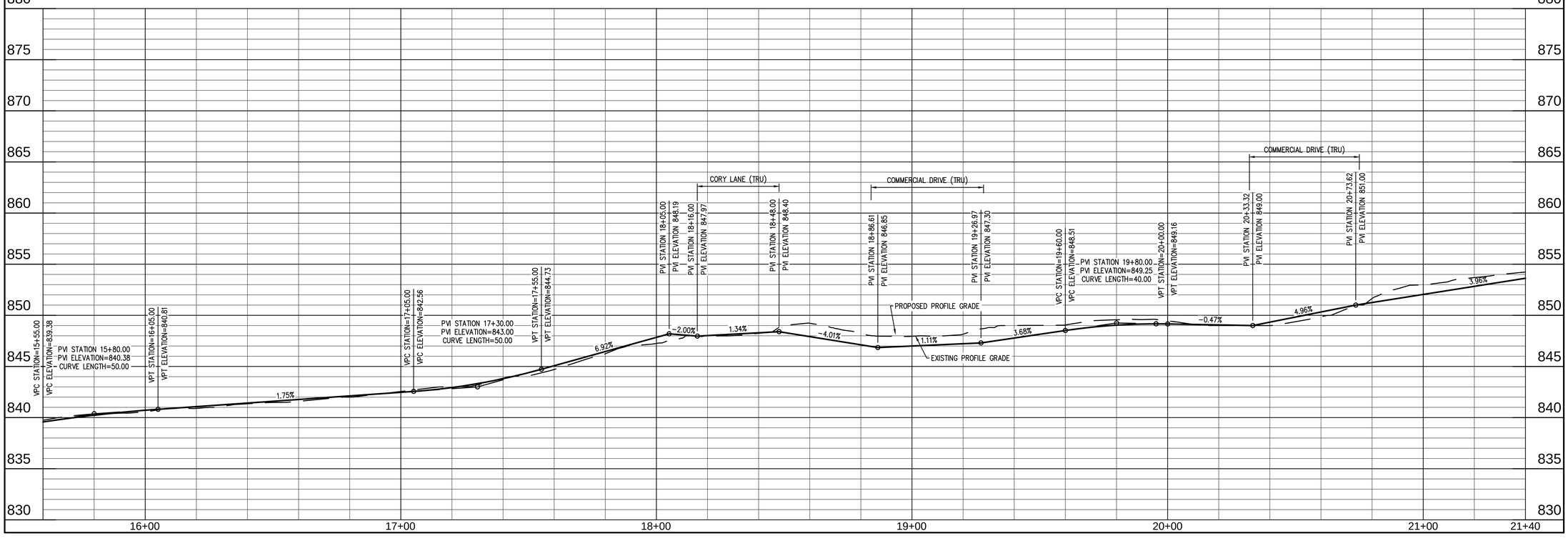

revisions:
Rev 10-11-12 - JR
Rev 6-6-14 SIDEPATH AT CITGO - RC

ARCHITECTURE
CIVIL ENGINEERING
PLANNING
BYNUM FANYO & ASSOCIATES, INC.
528 north walnut street
(812) 332-8030
bloomington, indiana
(812) 339-2990 (Fax)

JEFFREY S. FANYO No. 18283 STATE OF INDIANA PROFESSIONAL ENGINEER
9-4-12
certified by:

PROPOSED
WEST 2ND STREET SIDEPATH
W. 2ND STREET
BLOOMINGTON, INDIANA

title: LINE 'P-1' PLAN & PROFILE

designed by: RC
drawn by: RC,JR
checked by: JSF
sheet no: C302
project no.: 400936

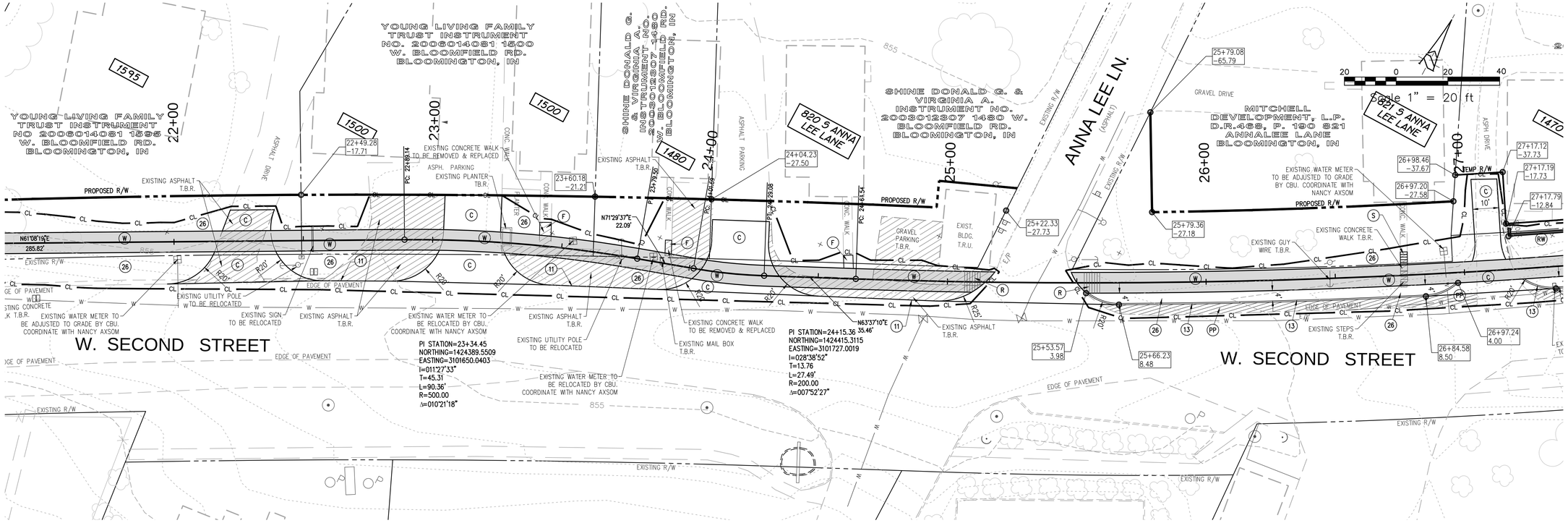

LINE P-1 PROFILE

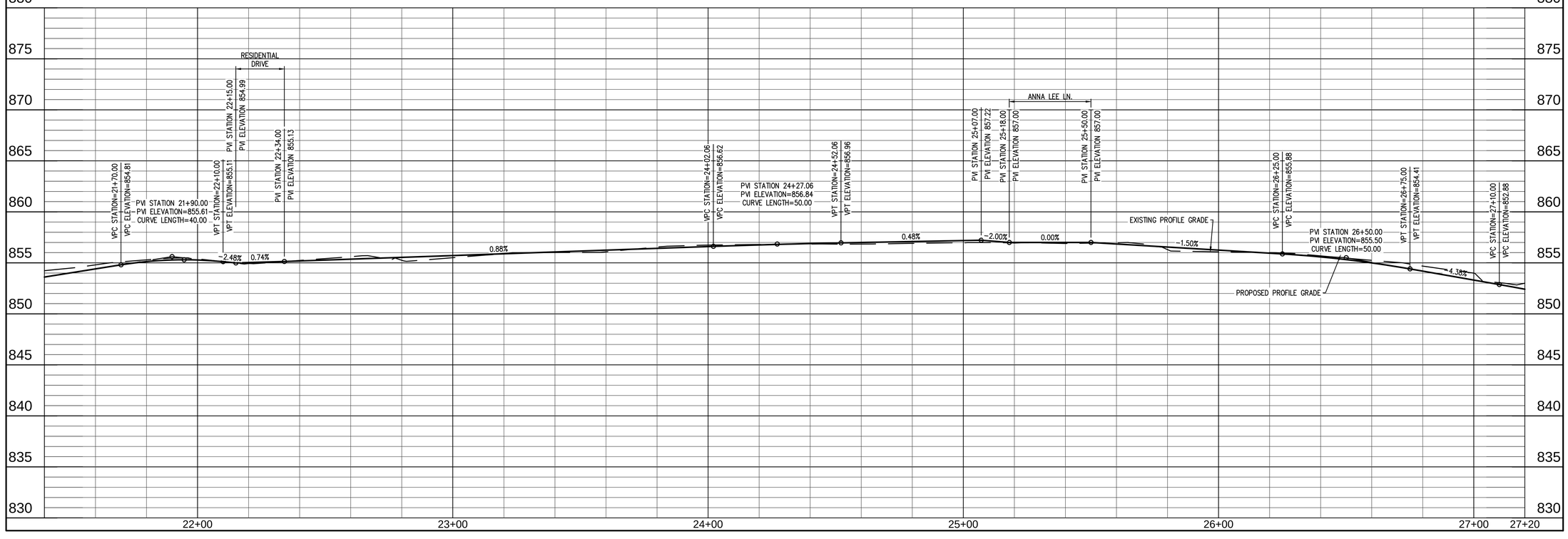

revisions:
Rev 10-11-12 – JR

ARCHITECTURE
CIVIL ENGINEERING
PLANNING
BYNUM FANYO & ASSOCIATES, INC.
bloomington, indiana
(812) 339-2990 (Fax)
528 north walnut street
(812) 332-8030

JEFFREY S. FANYO
No. 18283
STATE OF INDIANA
PROFESSIONAL ENGINEER
9-4-12
certified by:

PROPOSED
WEST 2ND STREET SIDEPATH
W. 2ND STREET
BLOOMINGTON, INDIANA

title: LINE 'P-1' PLAN & PROFILE

designed by: RC
drawn by: RC,JR
checked by: JSF
sheet no: C303
project no.: 400936

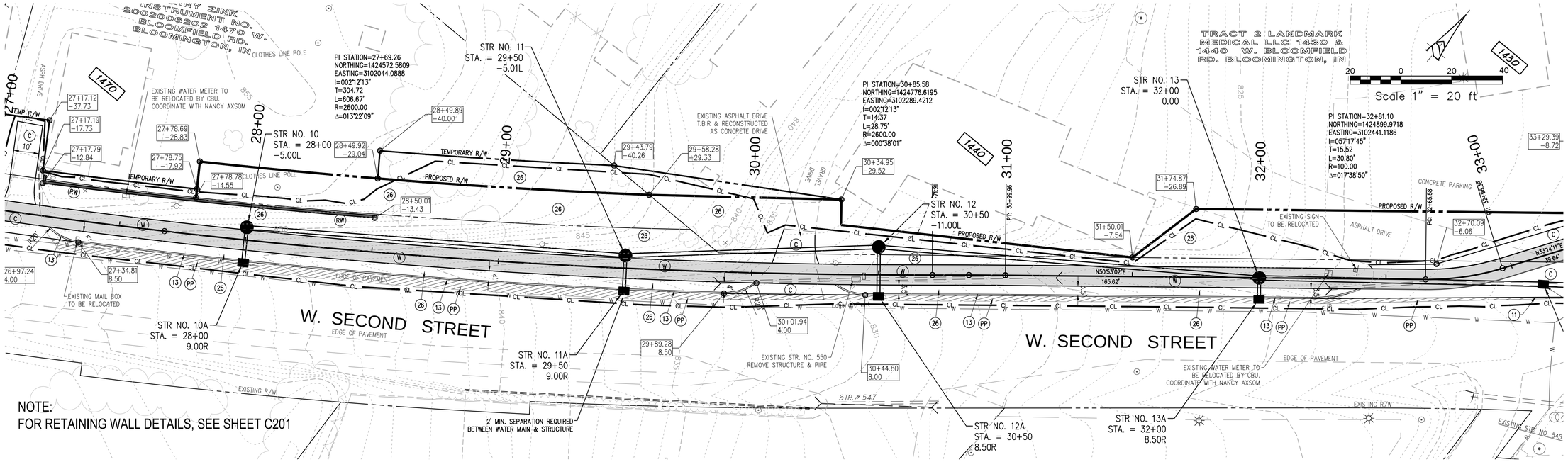

NOTE:
FOR RETAINING WALL DETAILS, SEE SHEET C201

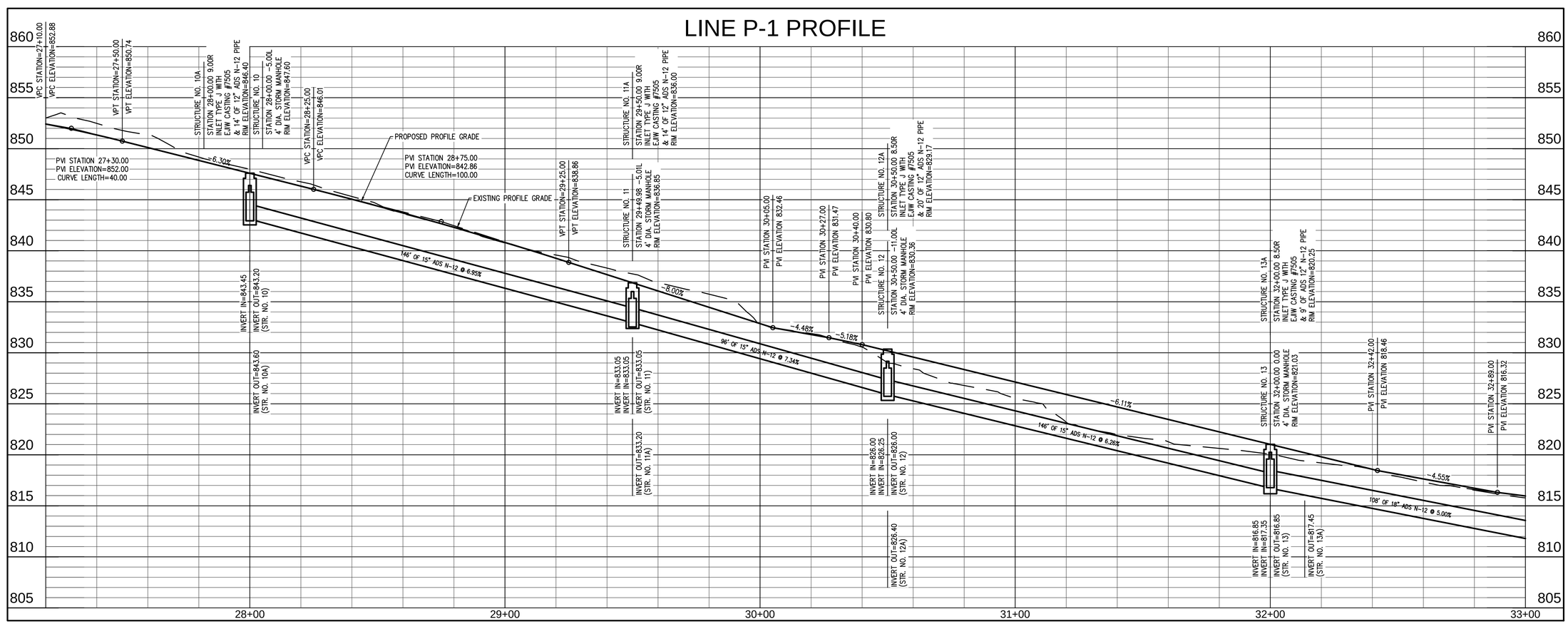

revisions:
Rev 10-11-12 - JR

ARCHITECTURE
CIVIL ENGINEERING
PLANNING
BYNUM FANYO & ASSOCIATES, INC.
bloomington, indiana
(812) 339-2990 (Fax)
528 north walnut street
(812) 332-8030

JEFFREY S. FANYO
No. 18283
STATE OF INDIANA
PROFESSIONAL ENGINEER
9-4-12
certified by:

PROPOSED
WEST 2ND STREET SIDEPATH
W. 2ND STREET
BLOOMINGTON, INDIANA

title: LINE 'P-1' PLAN & PROFILE

designed by: RC
drawn by: RC,JR
checked by: JSF
sheet no: C304
project no.: 400936

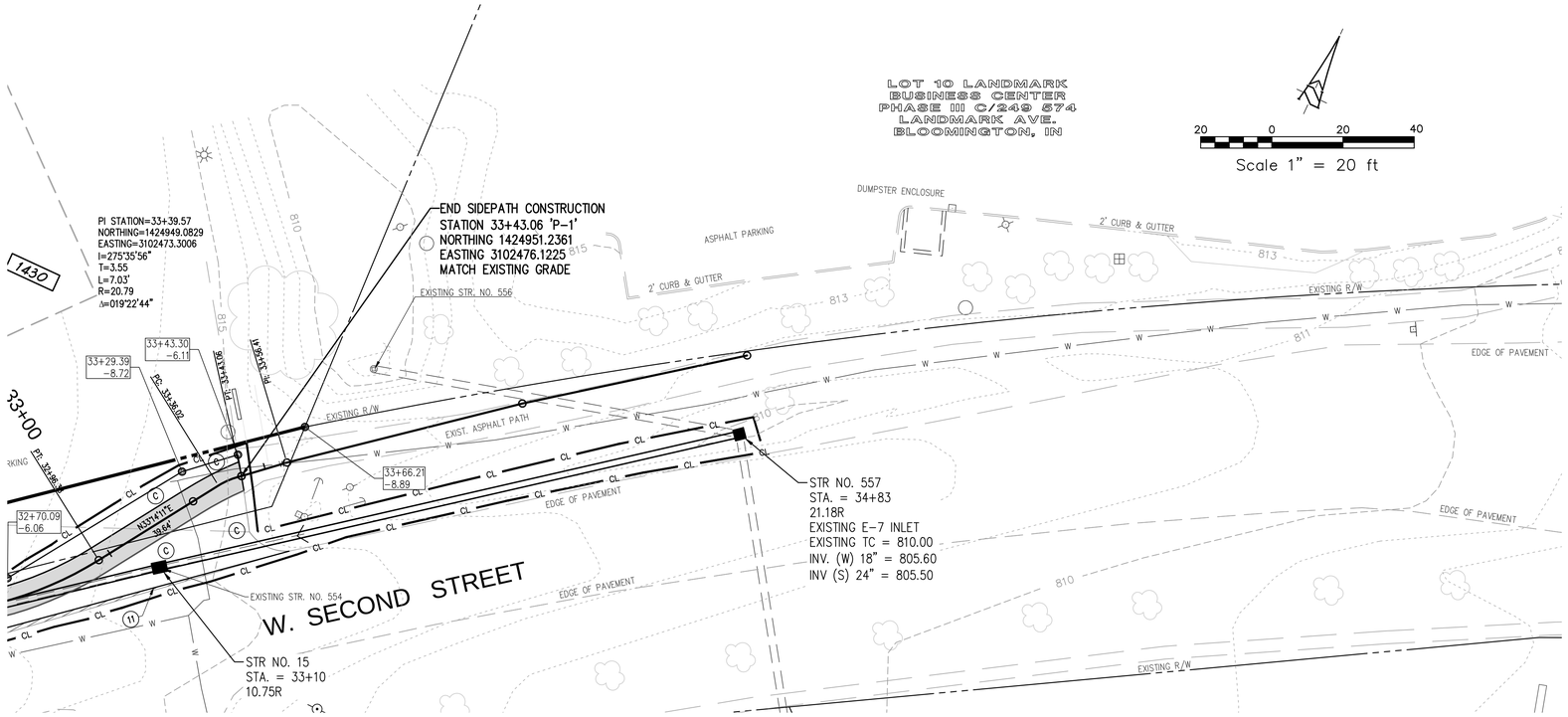

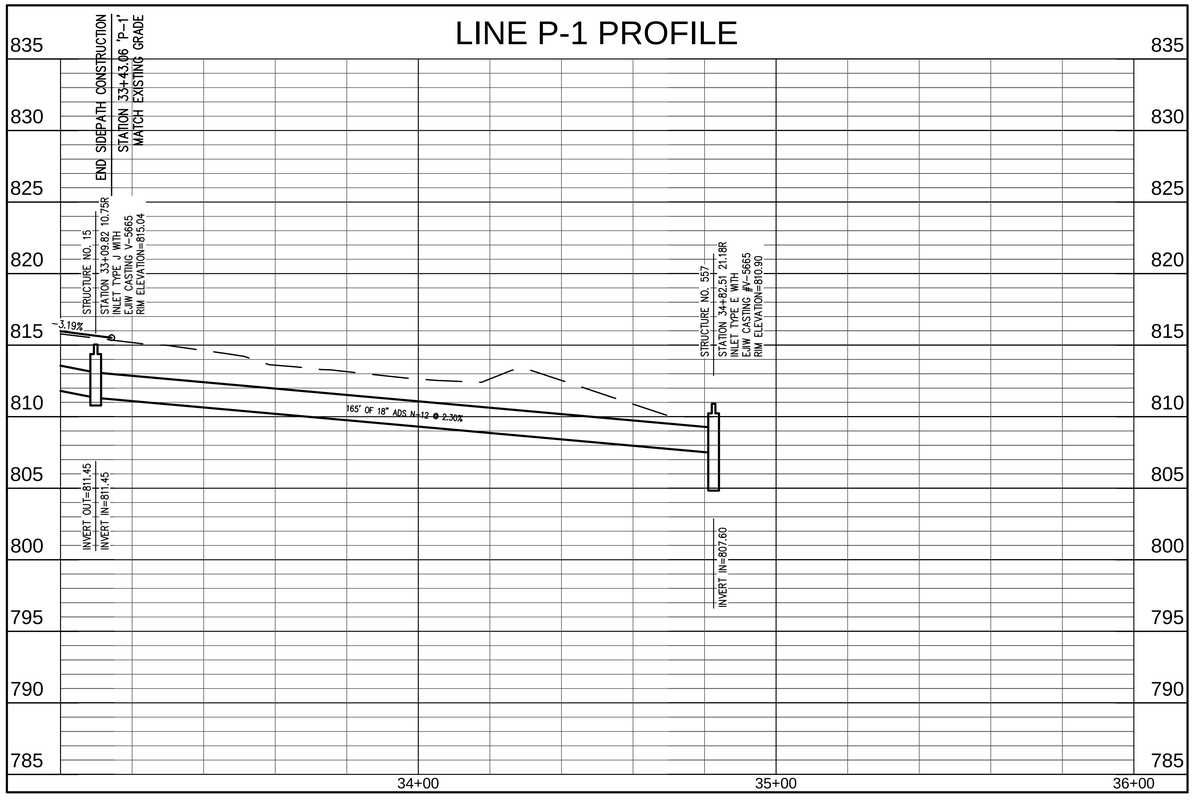

revisions:
Rev 10-11-12 – JR

ARCHITECTURE
CIVIL ENGINEERING
PLANNING
BYNUM FANYO & ASSOCIATES, INC.
528 north walnut street
(812) 332-8030
bloomington, indiana
(812) 339-2990 (Fax)

JEFFREY S. FANYO
No. 18283
STATE OF INDIANA
PROFESSIONAL ENGINEER
9-4-12
certified by:

PROPOSED
WEST 2ND STREET SIDEPATH
W. 2ND STREET
BLOOMINGTON, INDIANA

title: LINE 'P-1' PLAN & PROFILE

designed by: RC
drawn by: RC,JR
checked by: JSF
sheet no: C305
project no.: 400936

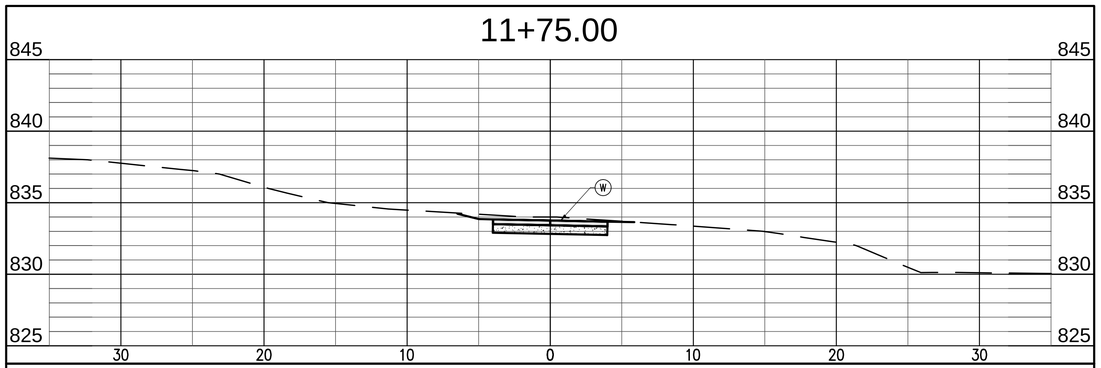

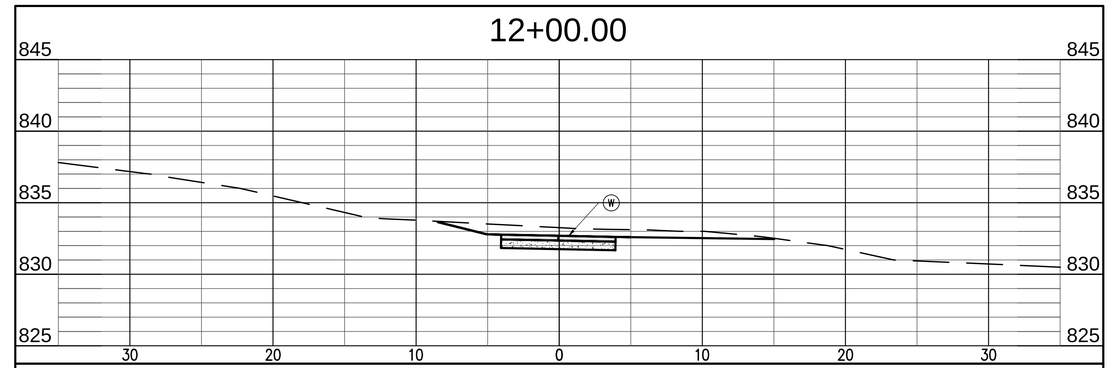

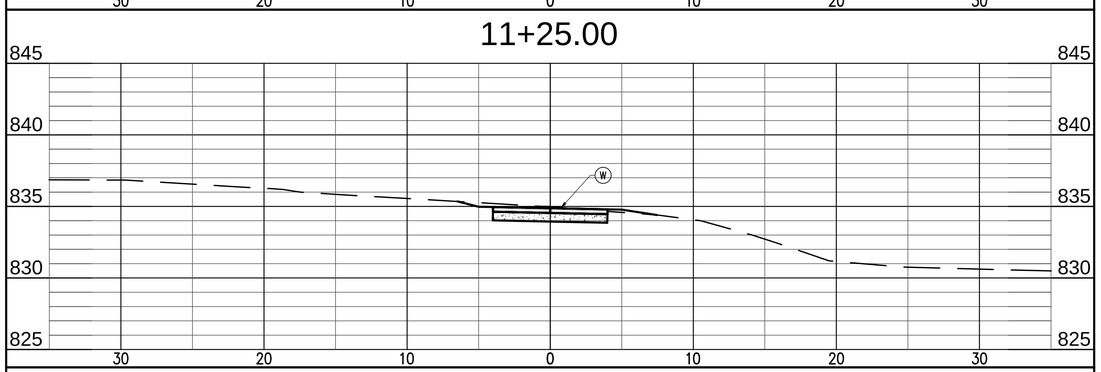

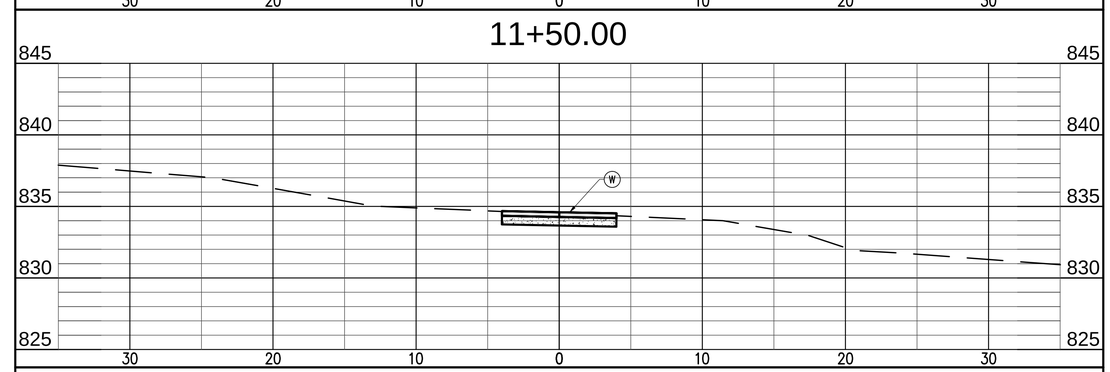

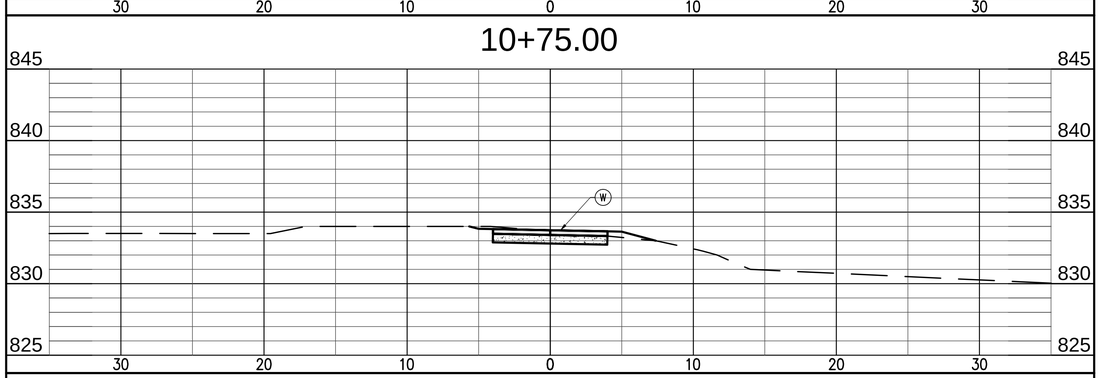

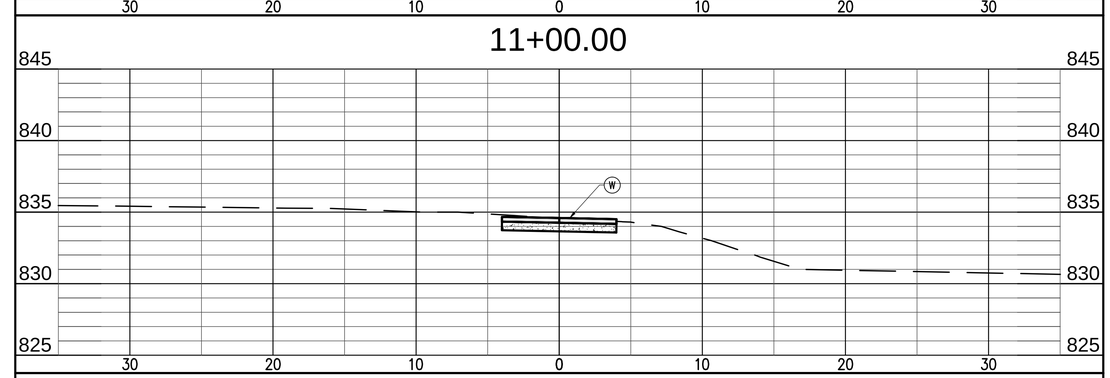

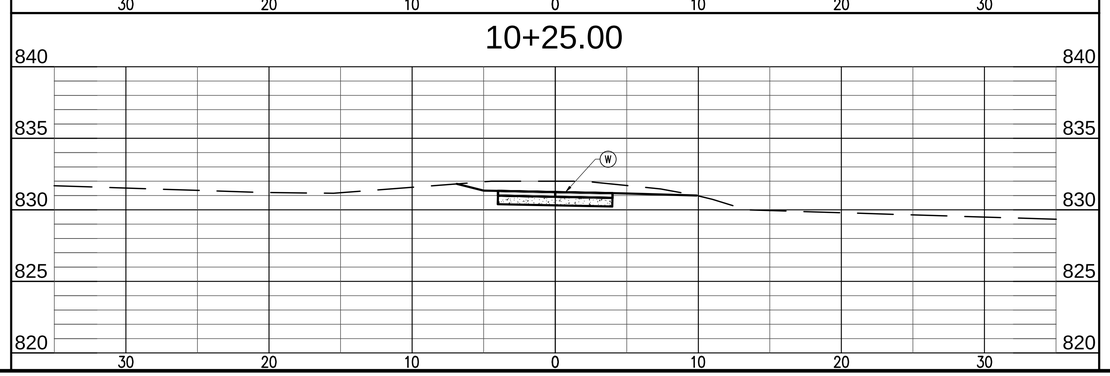

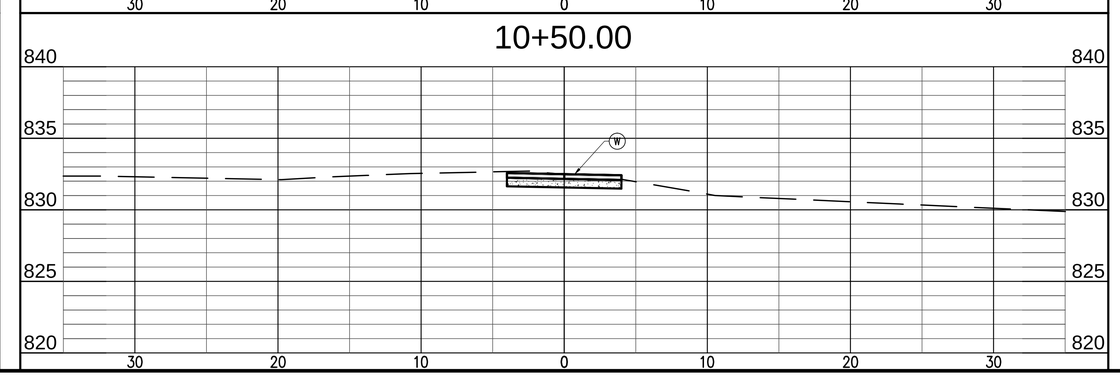

revisions:

ARCHITECTURE
CIVIL ENGINEERING
PLANNING
BYNUM FANYO & ASSOCIATES, INC.
528 north walnut street
(812) 332-8030
bloomington, indiana
(812) 339-2990 (Fax)

JEFFREY S. FANYO
No. 18283
STATE OF INDIANA
PROFESSIONAL ENGINEER
9-4-12
certified by:

PROPOSED
WEST 2ND STREET SIDEPATH
W. 2ND STREET
BLOOMINGTON, INDIANA

title: LINE 'P-1' CROSS SECTIONS

designed by: RC
drawn by: RC,JR
checked by: JSF
sheet no: C401
project no.: 400936

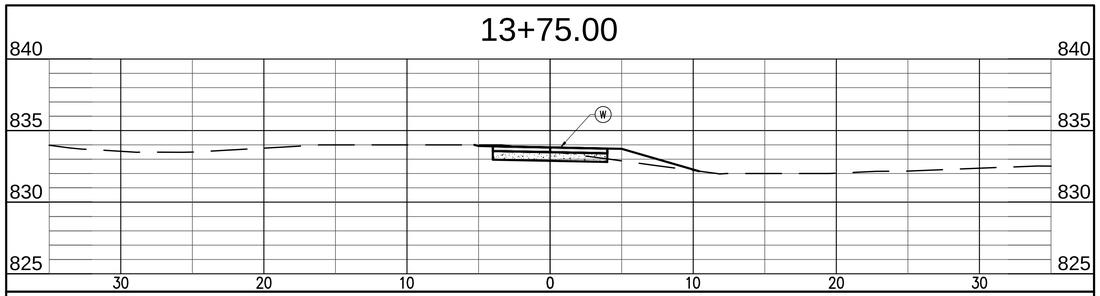

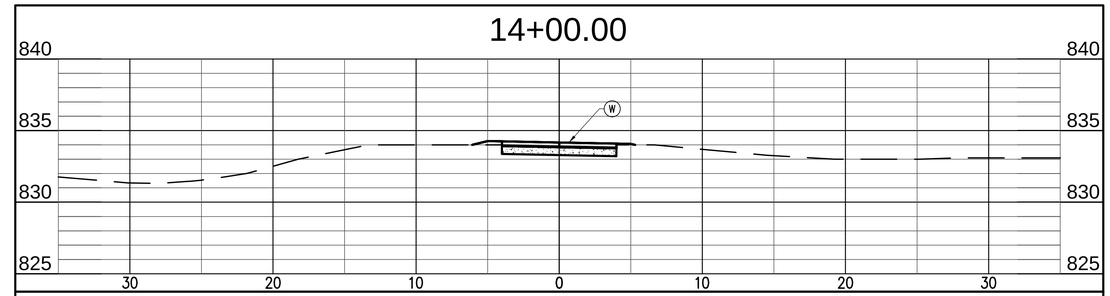

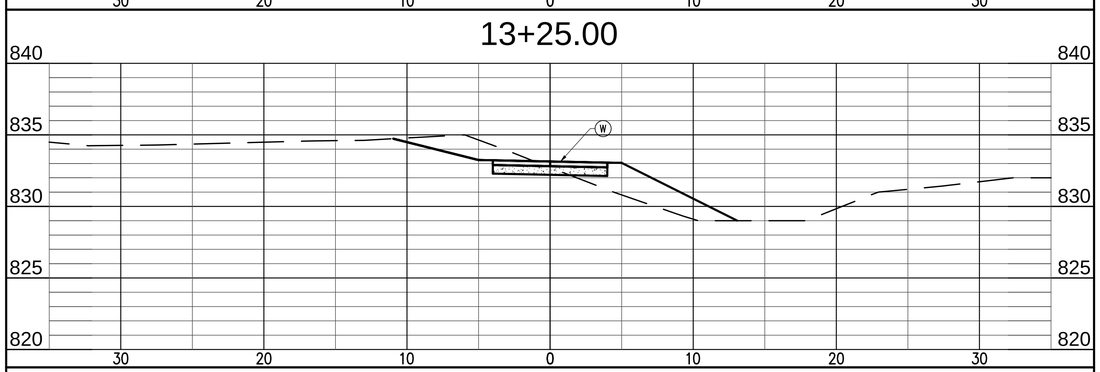

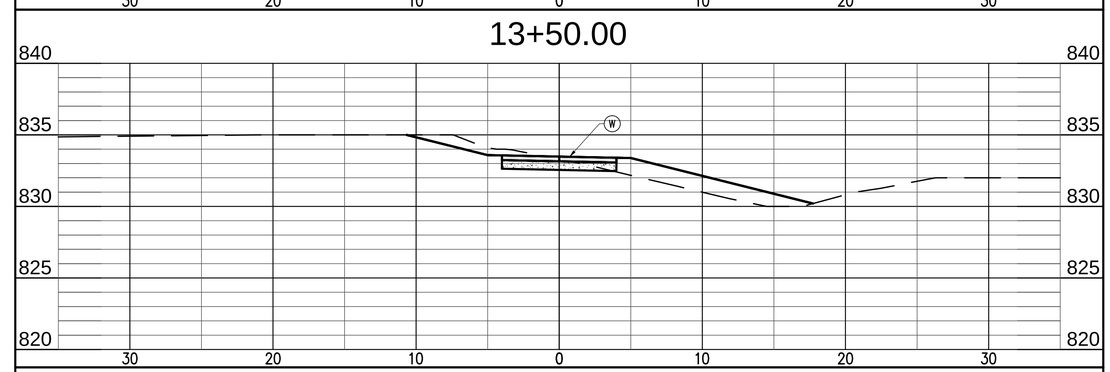

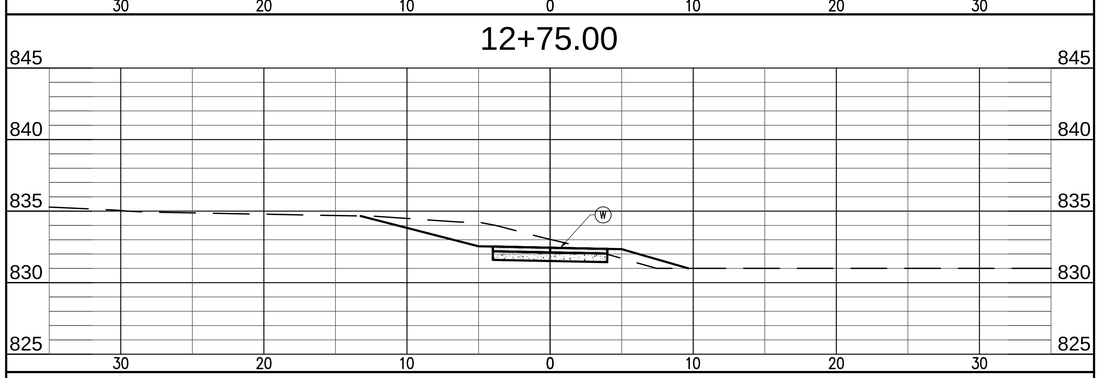

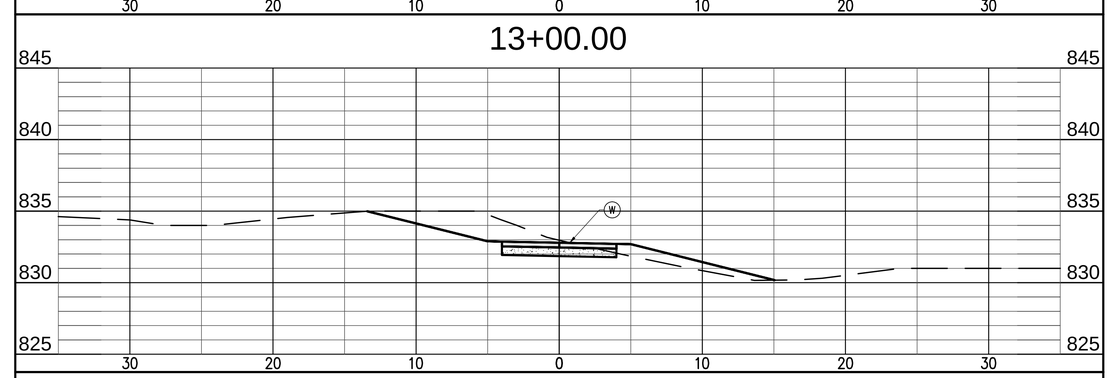

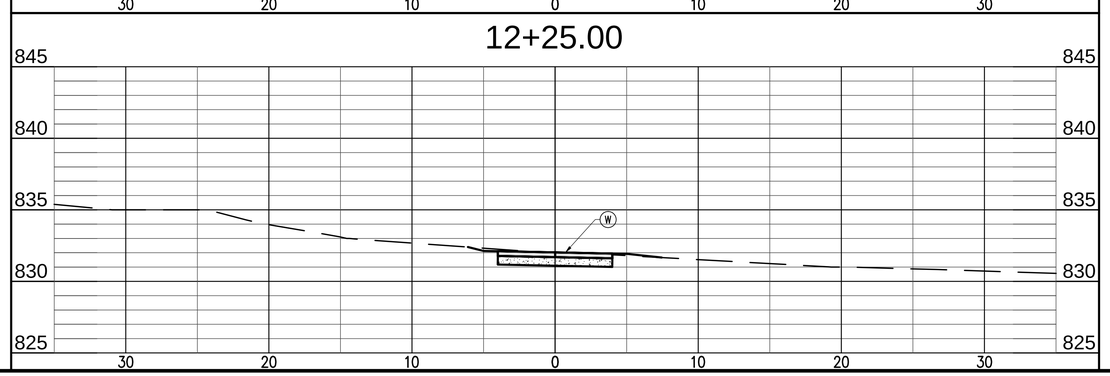

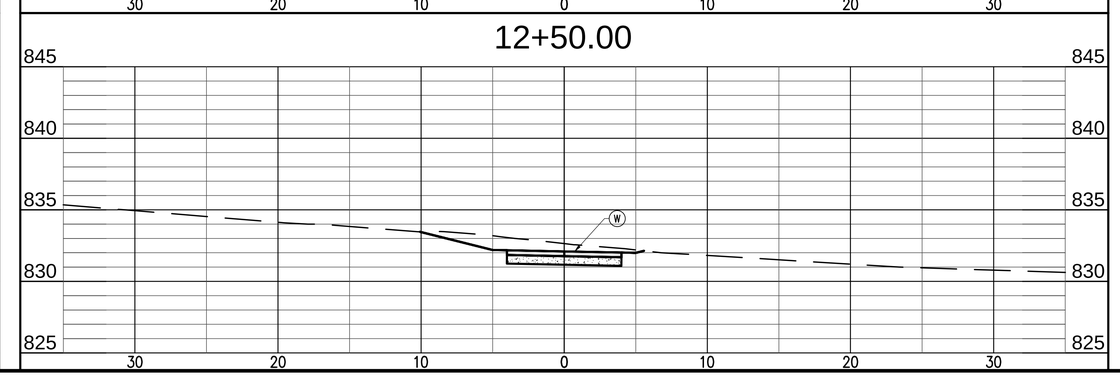

revisions:

ARCHITECTURE
CIVIL ENGINEERING
PLANNING
BYNUM FANYO & ASSOCIATES, INC.
528 north walnut street
(812) 332-8030
bloomington, indiana
(812) 339-2990 (Fax)

JEFFREY S. FANYO
No. 18283
STATE OF INDIANA
PROFESSIONAL ENGINEER
9-4-12
certified by:

PROPOSED
WEST 2ND STREET SIDEPATH
W. 2ND STREET
BLOOMINGTON, INDIANA

title: LINE 'P-1' CROSS SECTIONS

designed by:
drawn by:
checked by:
sheet no: C402
project no.: 400936

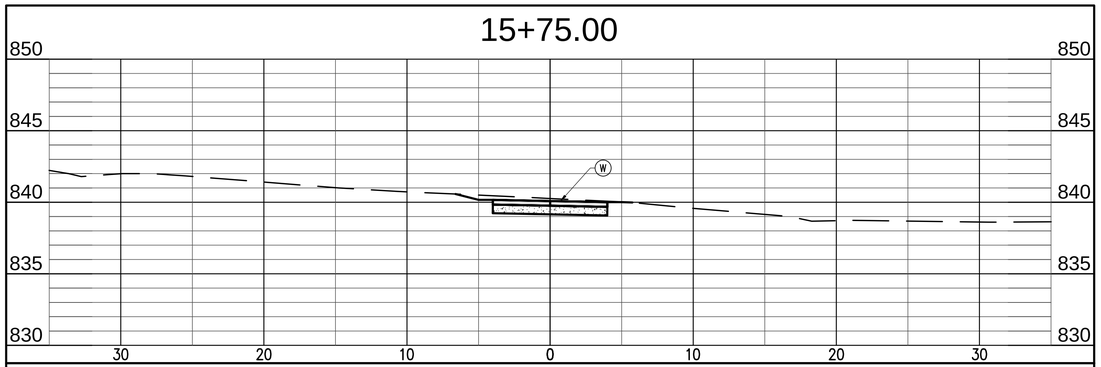

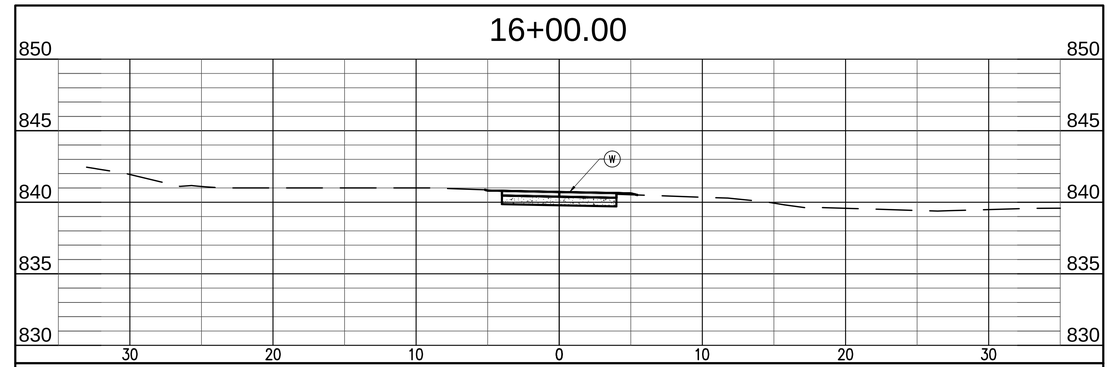

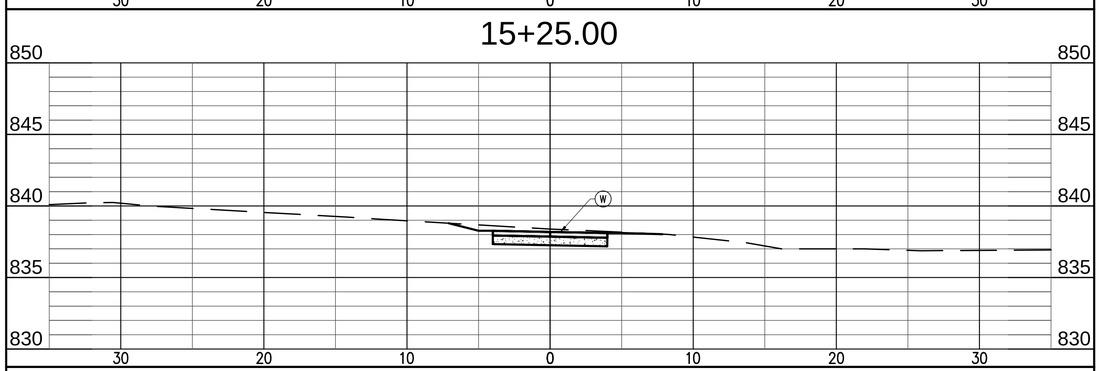

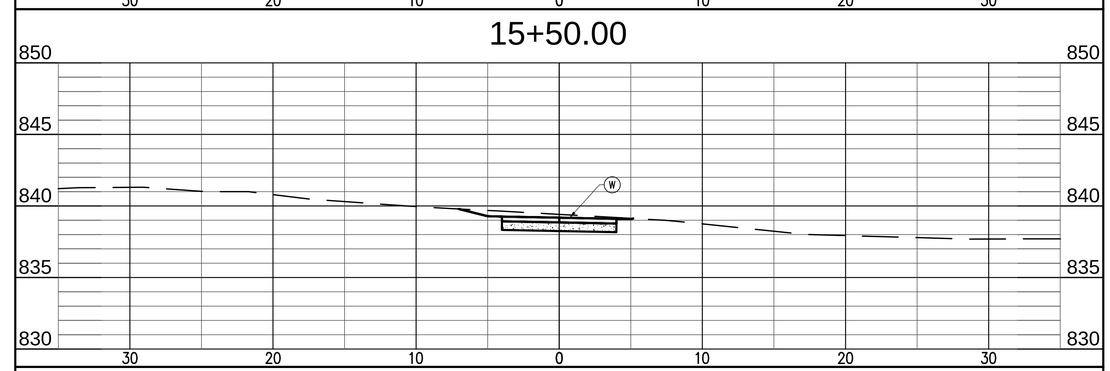

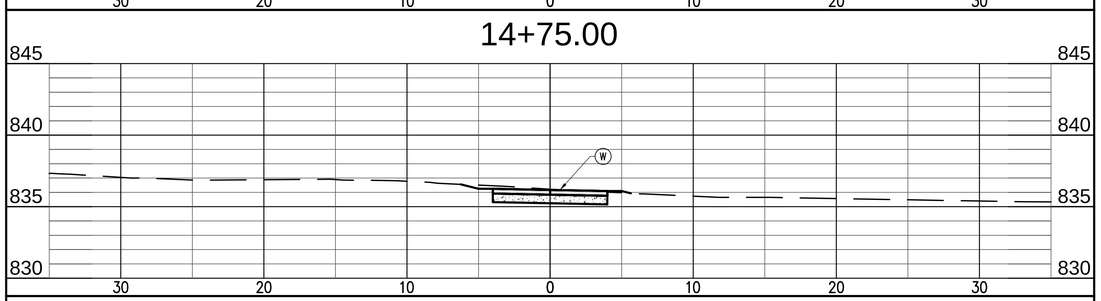

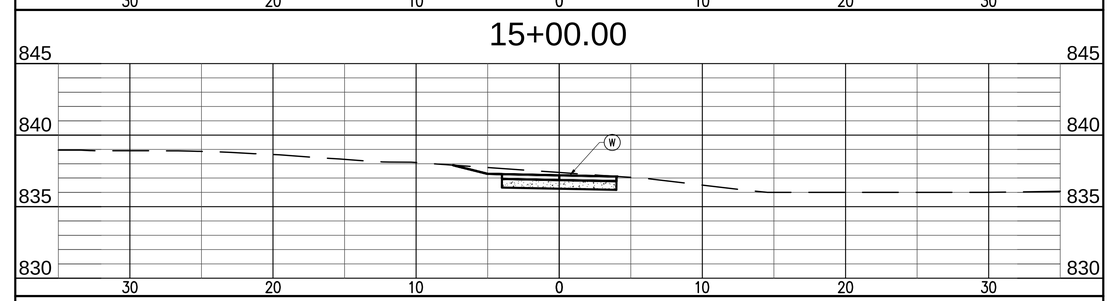

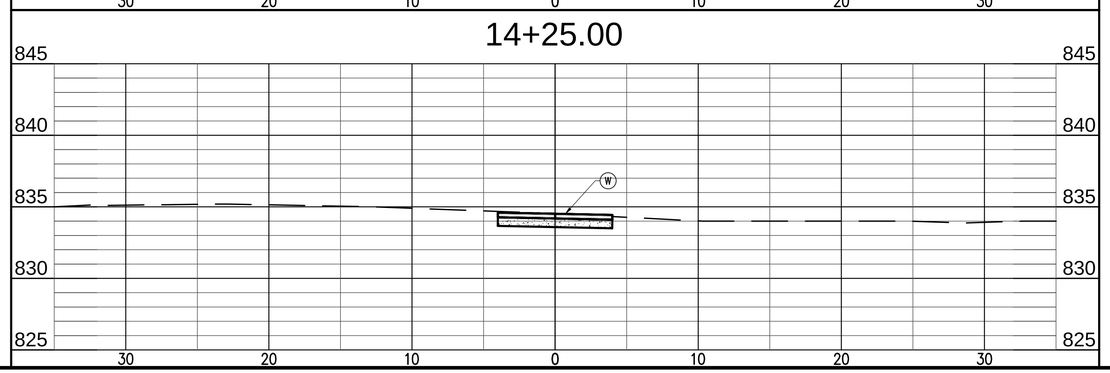

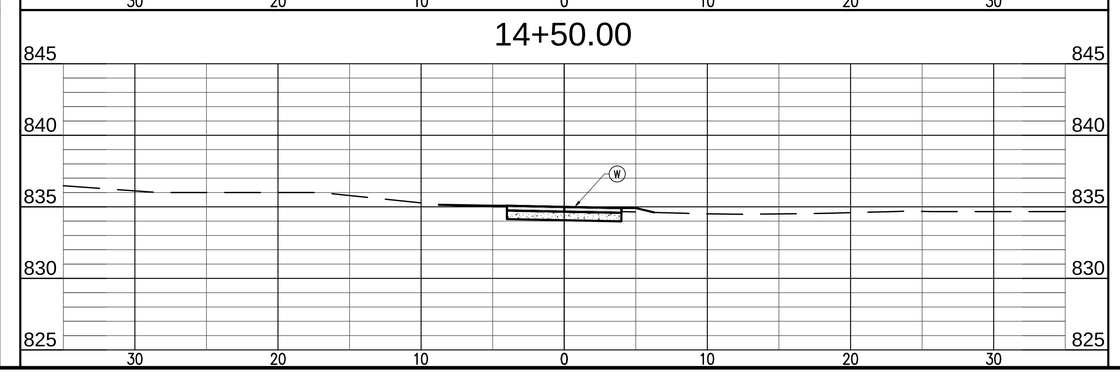

revisions:

ARCHITECTURE
CIVIL ENGINEERING
PLANNING
BYNUM FANYO & ASSOCIATES, INC.
528 north walnut street
(812) 332-8030
bloomington, indiana
(812) 339-2990 (Fax)

JEFFREY S. FANYO
No. 18283
STATE OF INDIANA
PROFESSIONAL ENGINEER
9-4-12
certified by:

PROPOSED
WEST 2ND STREET SIDEPATH
W. 2ND STREET
BLOOMINGTON, INDIANA

title: LINE 'P-1' CROSS SECTIONS

designed by: RC
drawn by: RC,JR
checked by: JSF
sheet no: C403
project no.: 400936

18+25.00

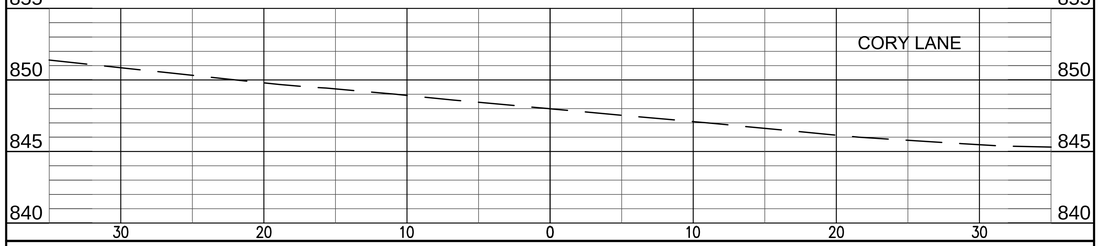

18+50.00

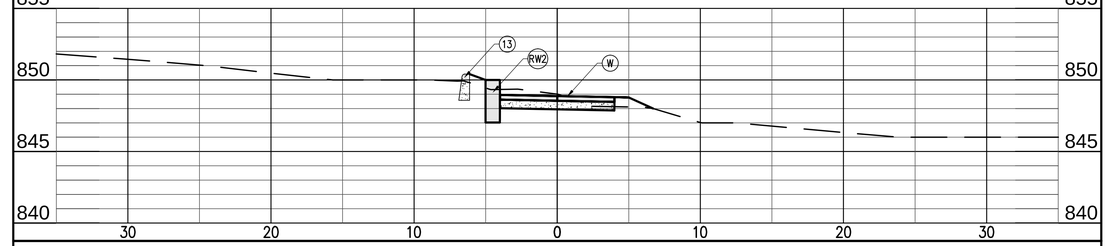

17+75.00

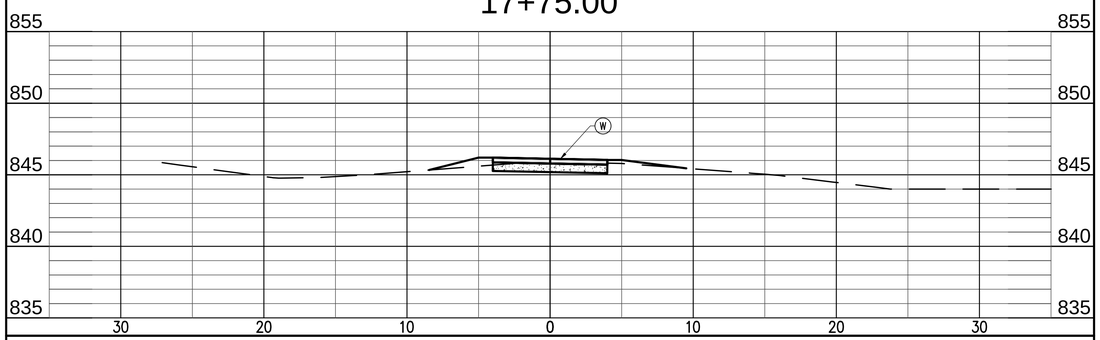

18+00.00

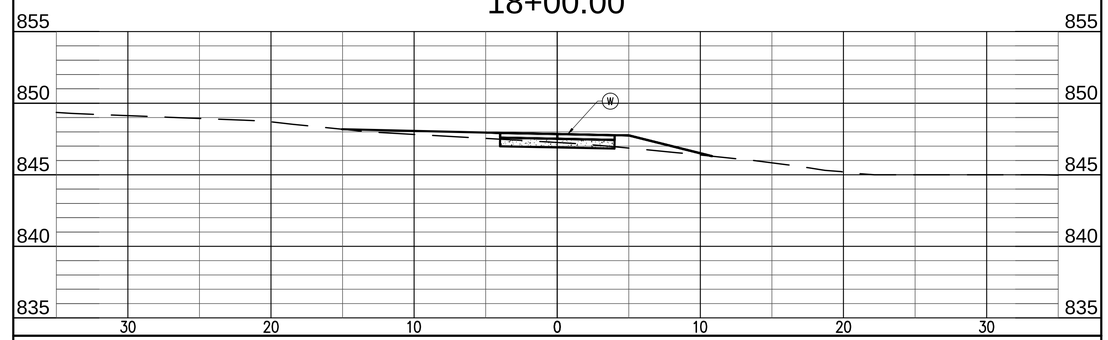

17+25.00

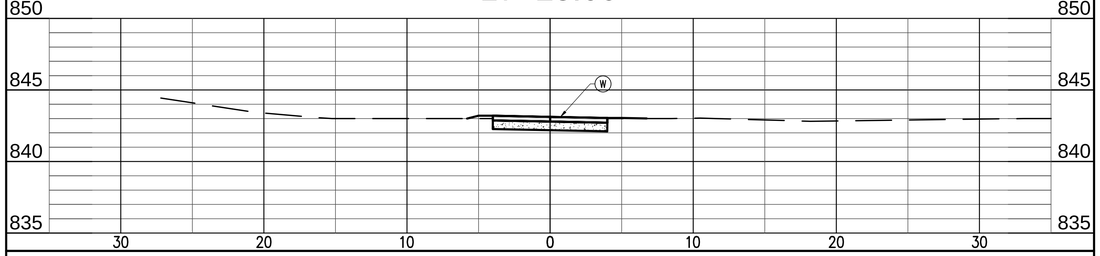

17+50.00

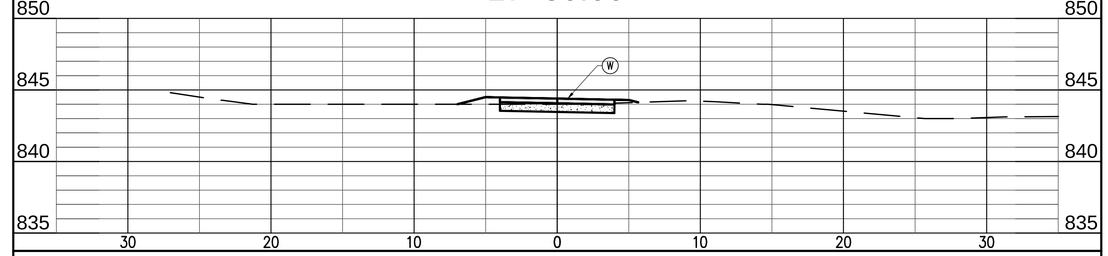

16+75.00

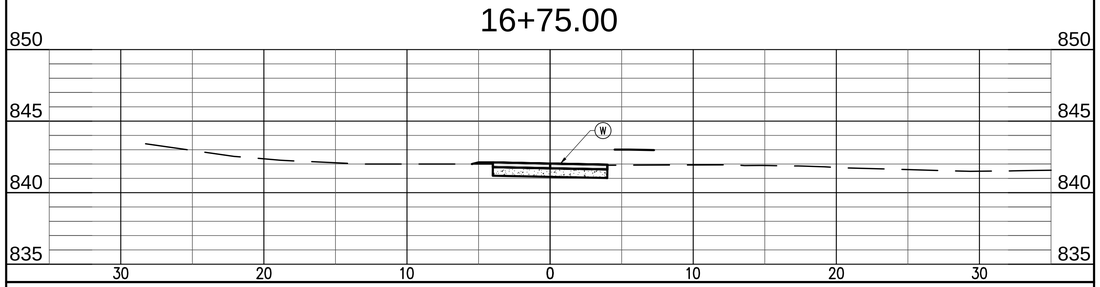

17+00.00

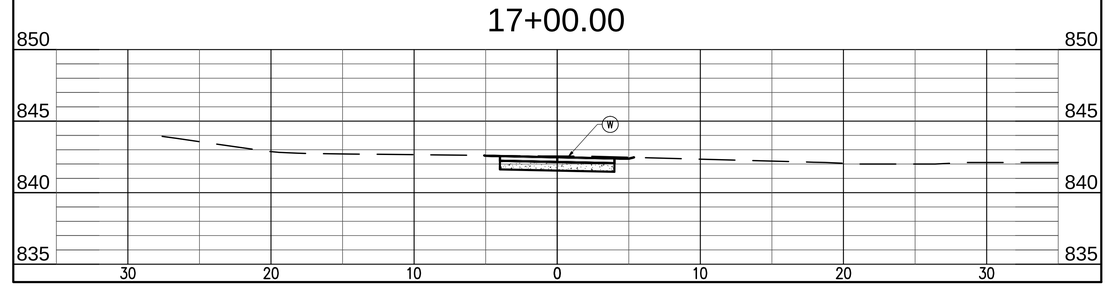

16+25.00

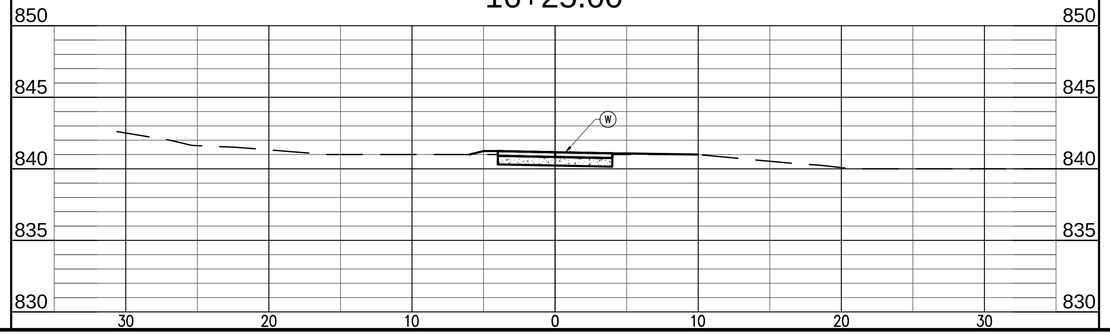

16+50.00

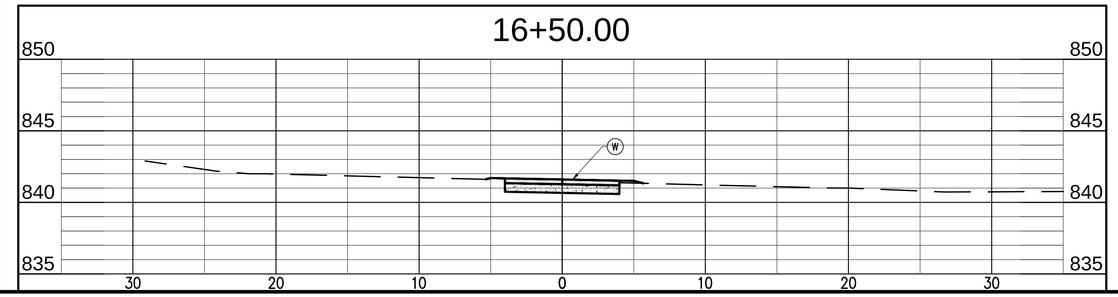

revisions:

ARCHITECTURE
CIVIL ENGINEERING
PLANNING

BYNUM FANYO & ASSOCIATES, INC.

528 north walnut street
bloomington, indiana
(812) 332-8030
(812) 339-2990 (Fax)

JEFFREY S. FANYO
No. 18283
STATE OF INDIANA
PROFESSIONAL ENGINEER
9-4-12

certified by:

PROPOSED
WEST 2ND STREET SIDEPATH

W. 2ND STREET
BLOOMINGTON, INDIANA

title: LINE 'P-1' CROSS SECTIONS

designed by: RC
drawn by: RC,JR
checked by: JSF
sheet no: C404
project no.: 400936

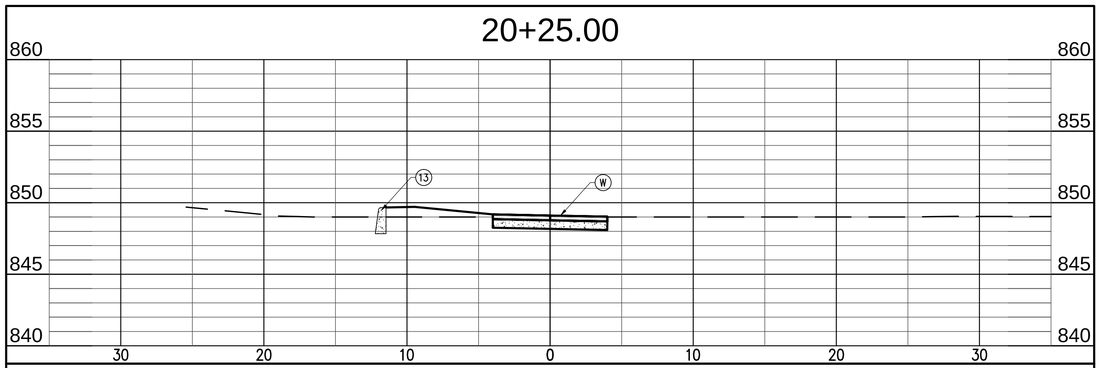

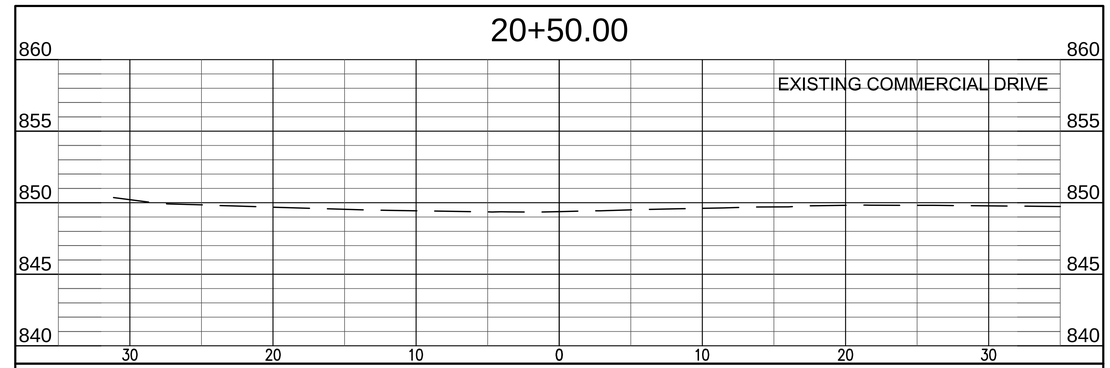

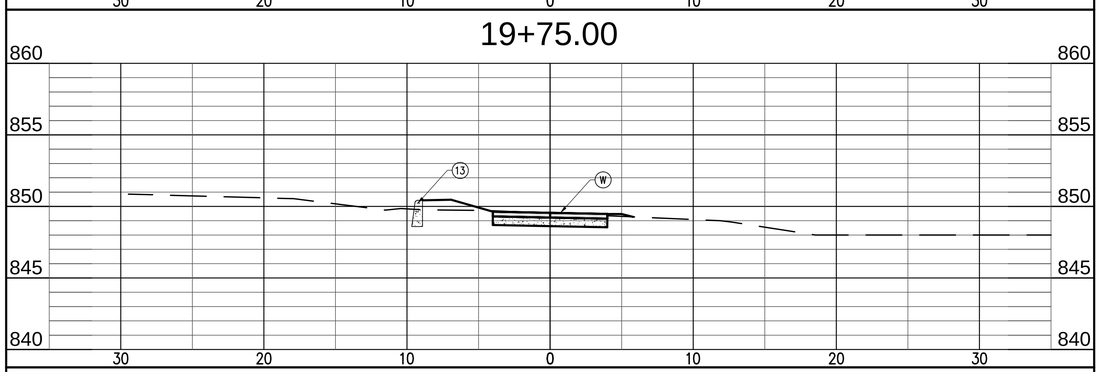

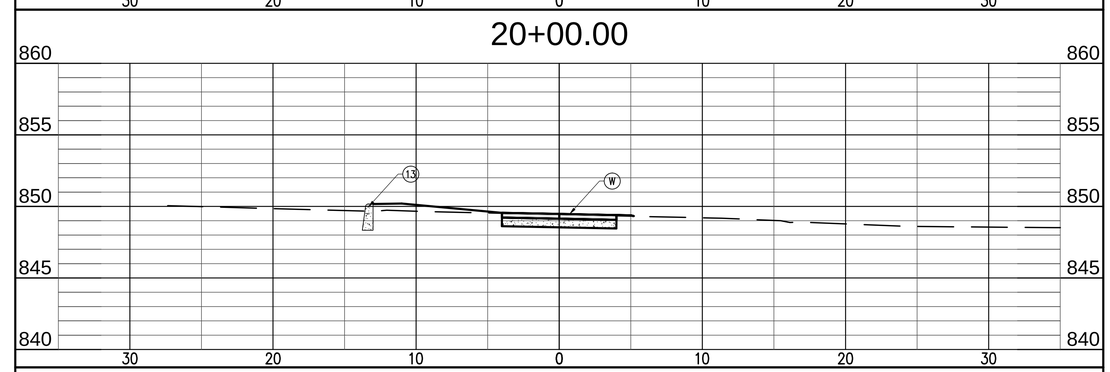

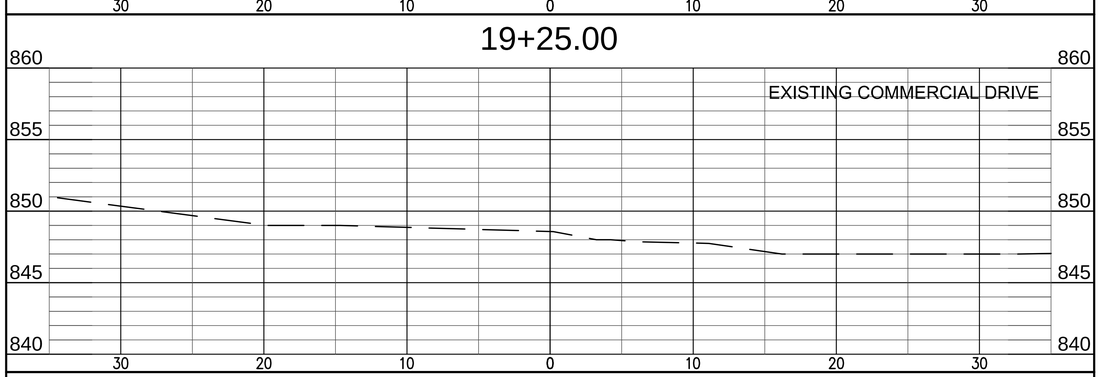

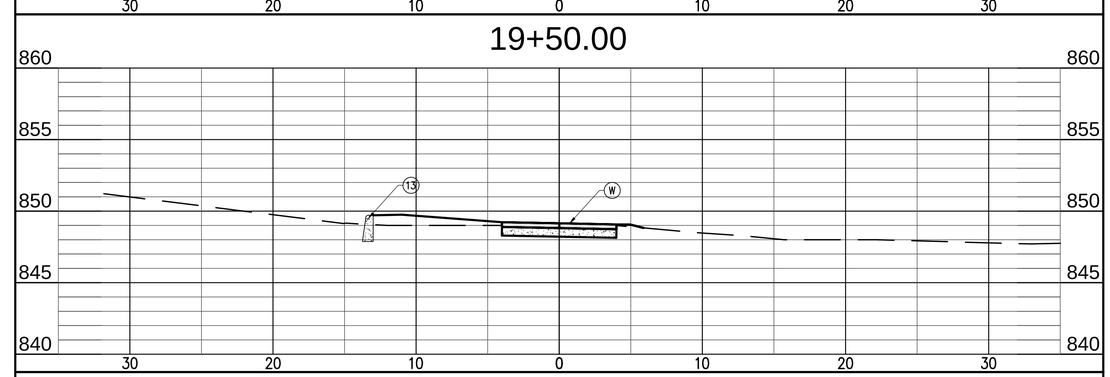

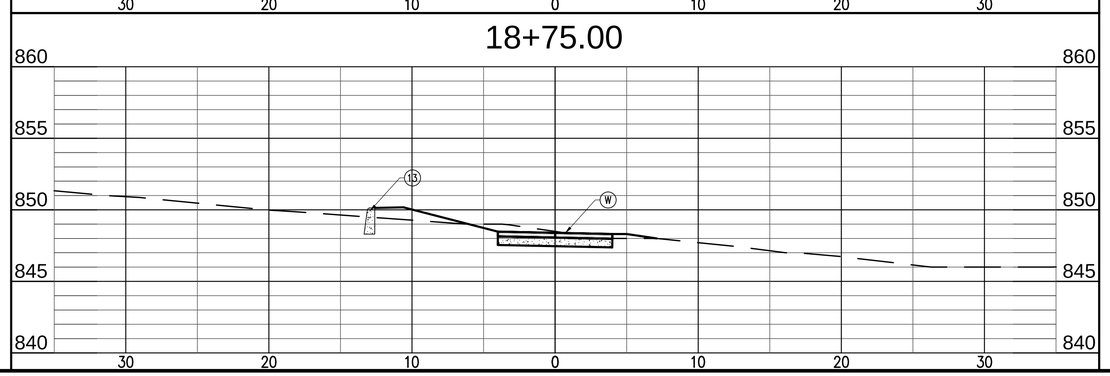

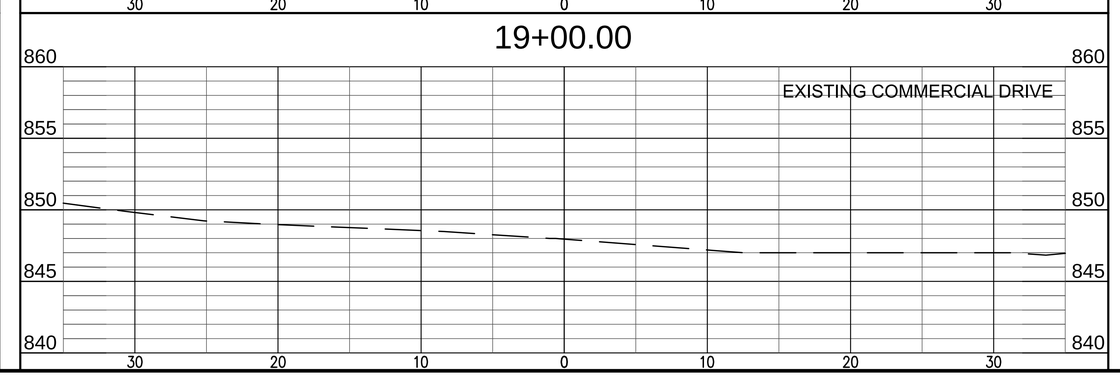

revisions:

ARCHITECTURE
CIVIL ENGINEERING
PLANNING
BYNUM FANYO & ASSOCIATES, INC.
528 north walnut street
(812) 332-8030
bloomington, indiana
(812) 339-2990 (Fax)

JEFFREY S. FANYO
No. 18283
STATE OF INDIANA
PROFESSIONAL ENGINEER
9-4-12
certified by:

PROPOSED
WEST 2ND STREET SIDEPATH
W. 2ND STREET
BLOOMINGTON, INDIANA

title: LINE 'P-1' CROSS SECTIONS

designed by: RC
drawn by: RC,JR
checked by: JSF
sheet no: C405
project no.: 400936

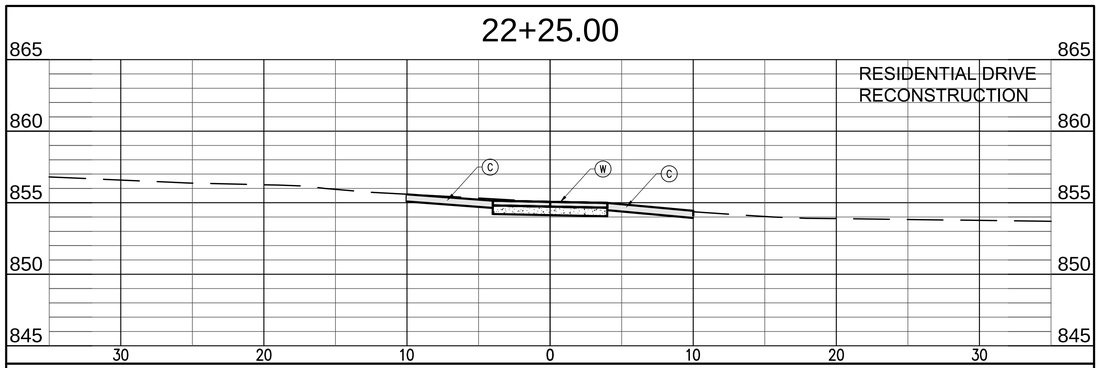

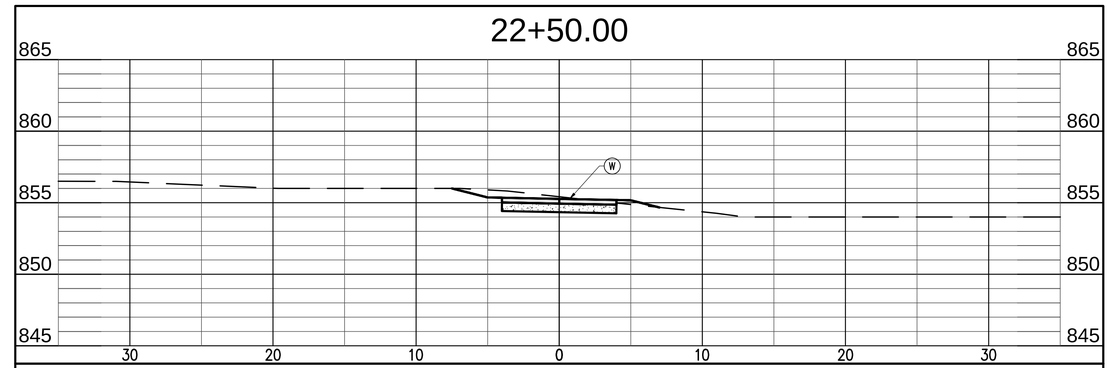

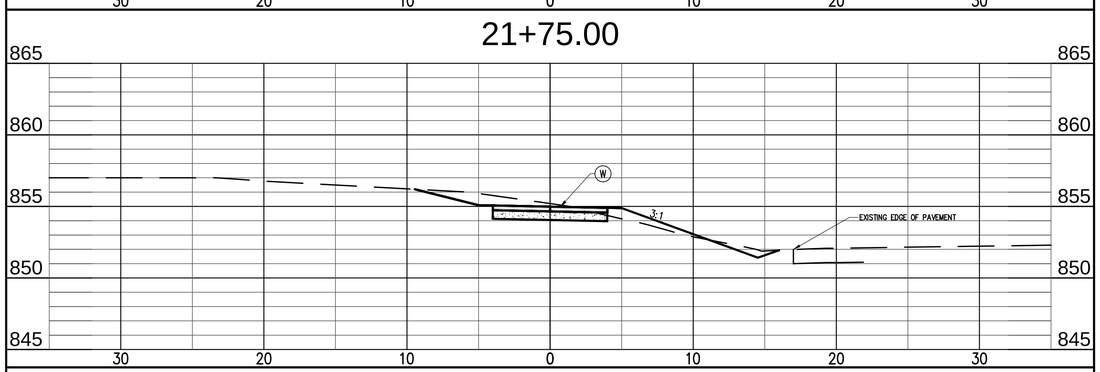

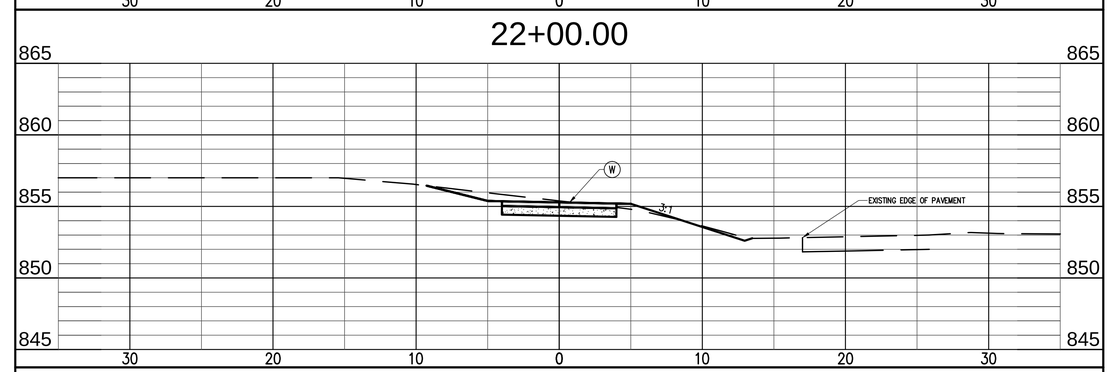

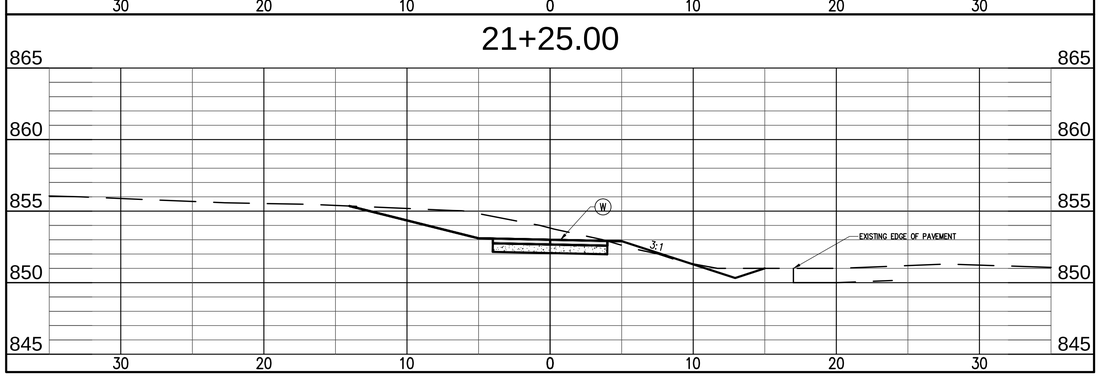

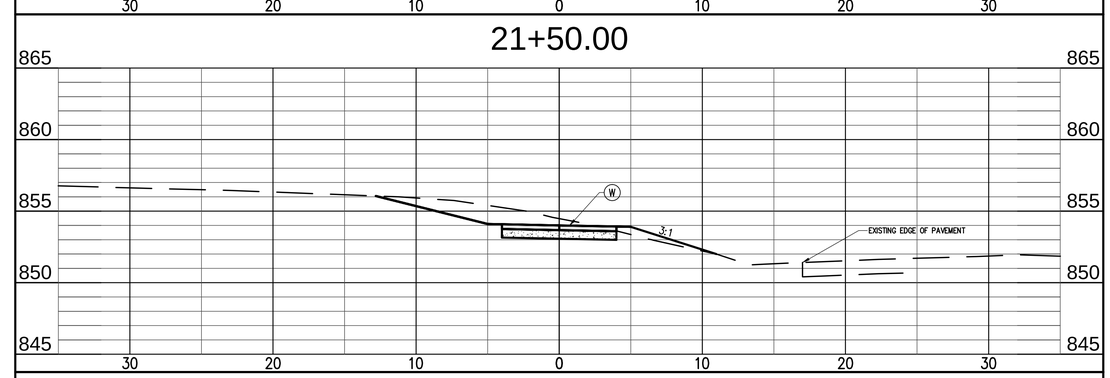

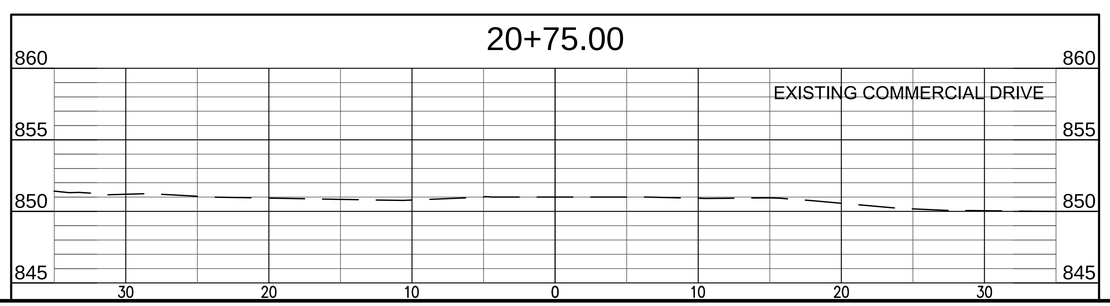

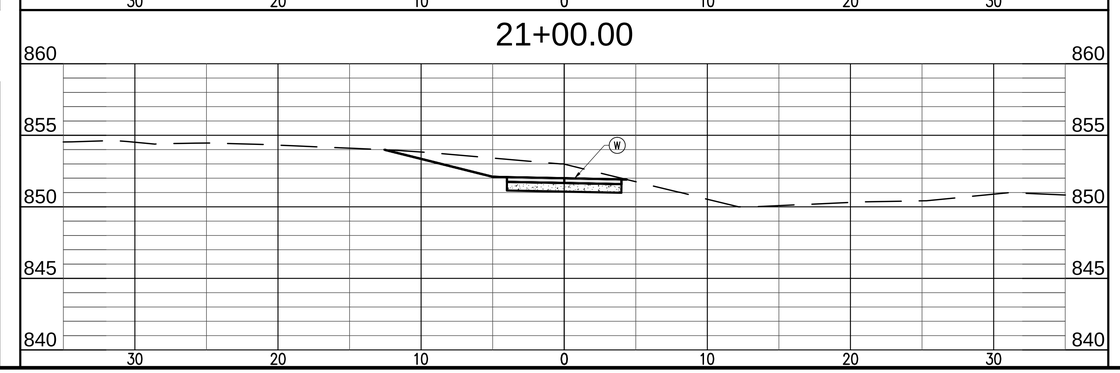

revisions:

ARCHITECTURE
CIVIL ENGINEERING
PLANNING
BYNUM FANYO & ASSOCIATES, INC.
528 north walnut street
(812) 332-8030
bloomington, indiana
(812) 339-2990 (Fax)

JEFFREY S. FANYO
No. 18283
STATE OF INDIANA
PROFESSIONAL ENGINEER
9-4-12
certified by:

PROPOSED
WEST 2ND STREET SIDEPATH
W. 2ND STREET
BLOOMINGTON, INDIANA

title: LINE 'P-1' CROSS SECTIONS

designed by: RC
drawn by: RC,JR
checked by: JSF
sheet no: C406
project no.: 400936

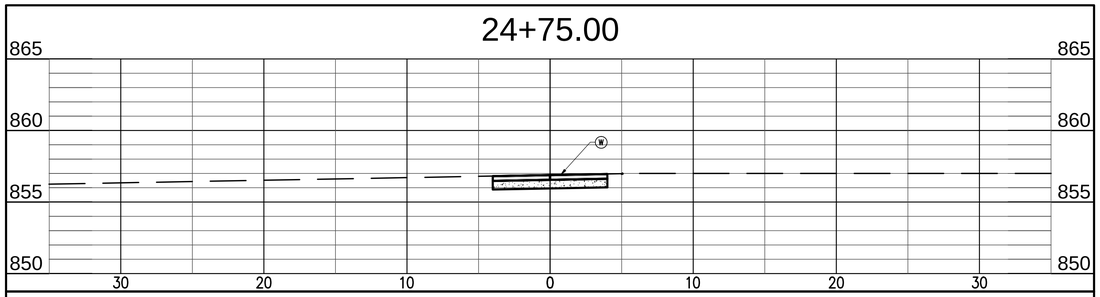

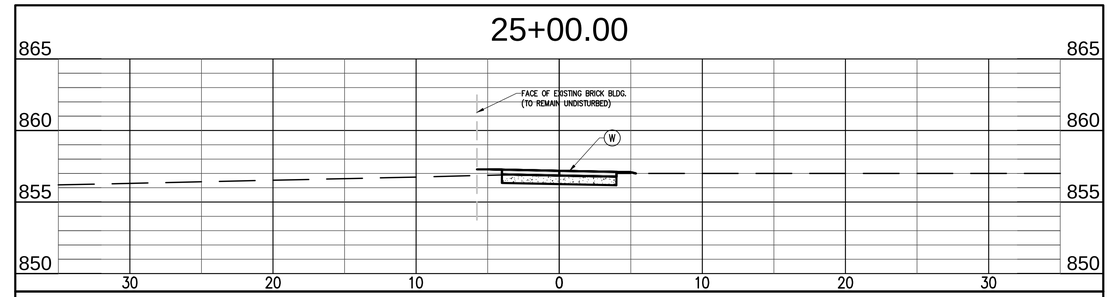

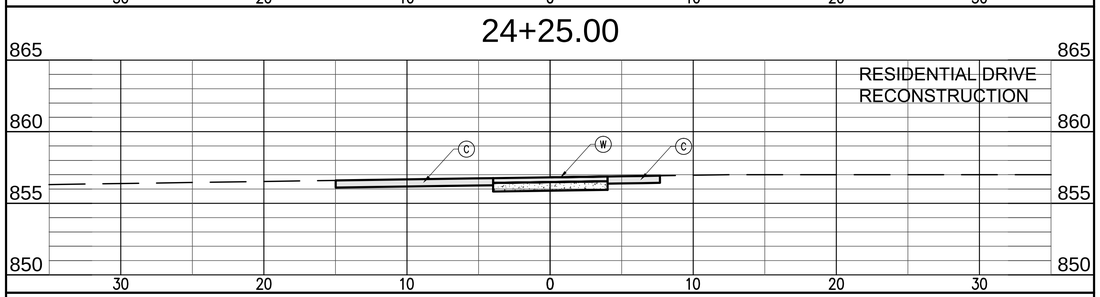

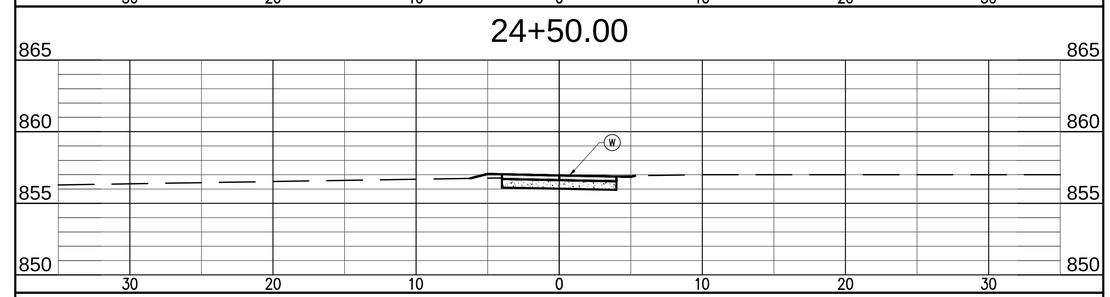

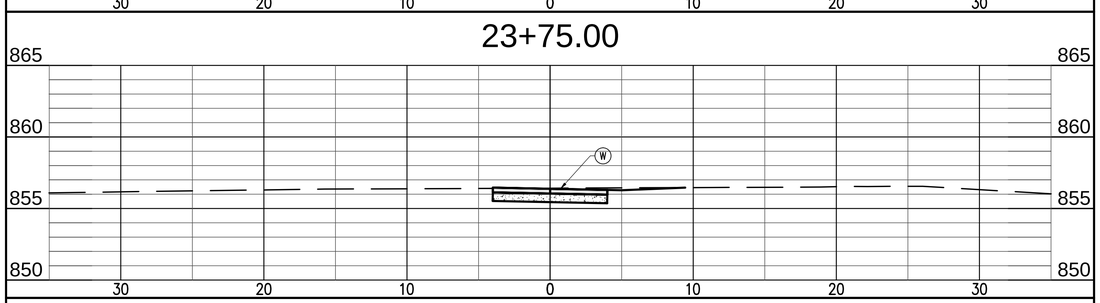

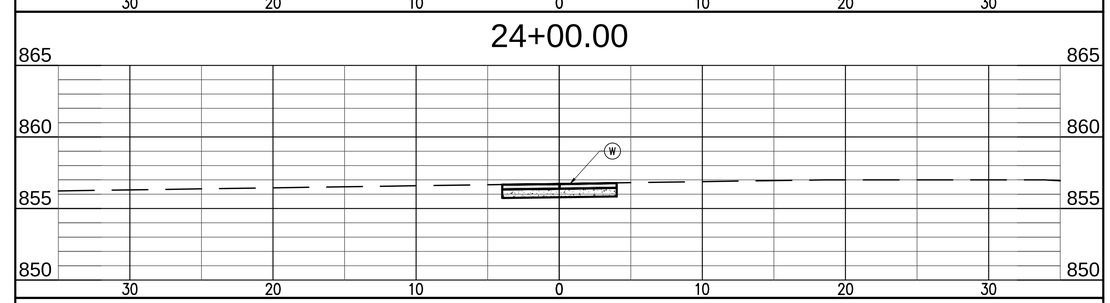

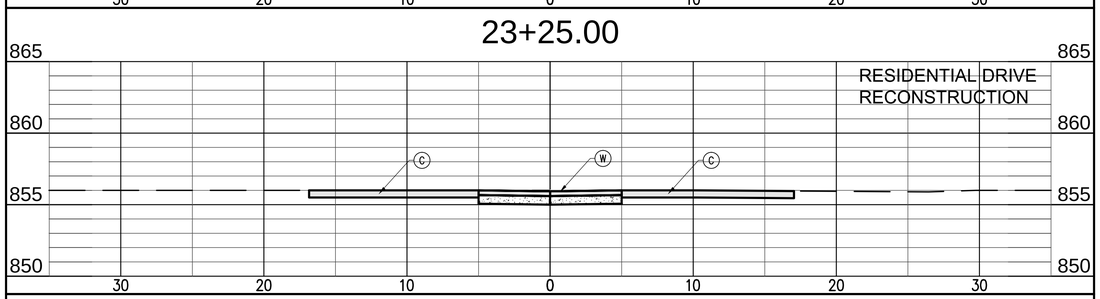

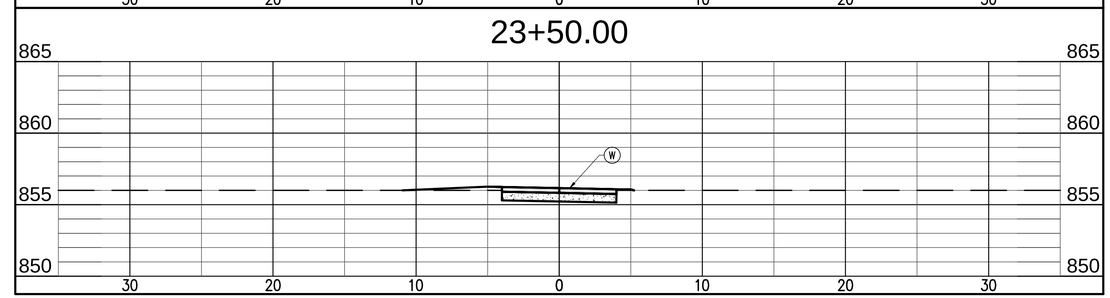

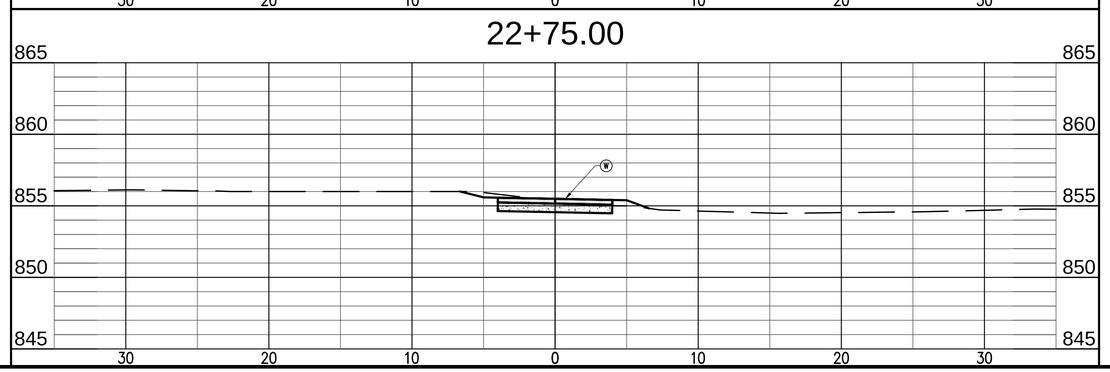

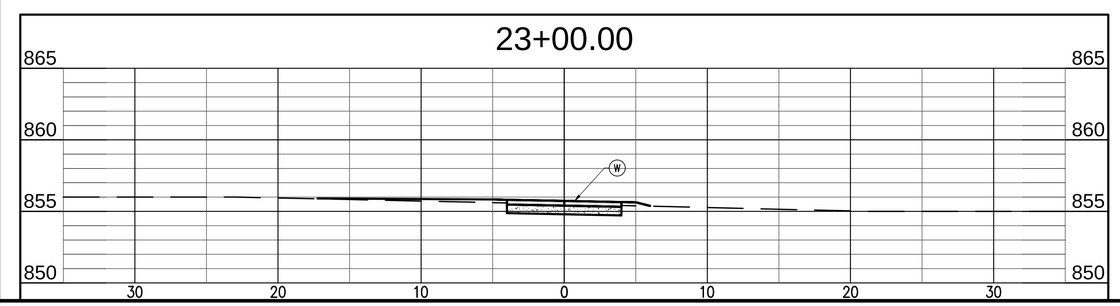

revisions:

ARCHITECTURE
CIVIL ENGINEERING
PLANNING
BYNUM FANYO & ASSOCIATES, INC.
528 north walnut street
bloomington, indiana
(812) 332-8030
(812) 339-2990 (Fax)

JEFFREY S. FANYO
No. 18283
STATE OF INDIANA
PROFESSIONAL ENGINEER
9-4-12
certified by:

PROPOSED
WEST 2ND STREET SIDEPATH
W. 2ND STREET
BLOOMINGTON, INDIANA

title: LINE 'P-1' CROSS SECTIONS

designed by: RC
drawn by: RC,JR
checked by: JSF
sheet no: C407
project no.: 400936

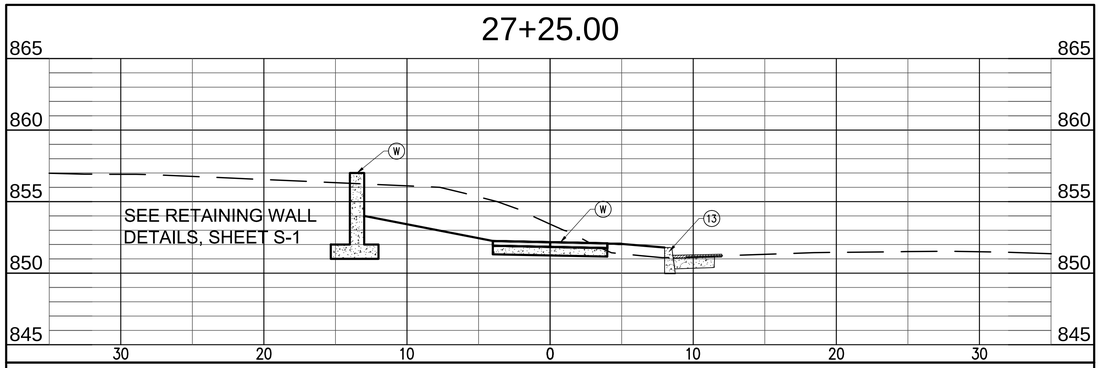

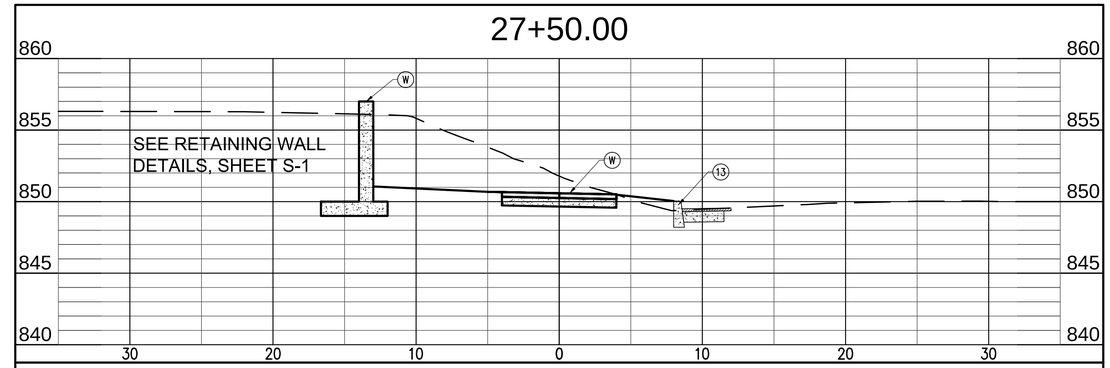

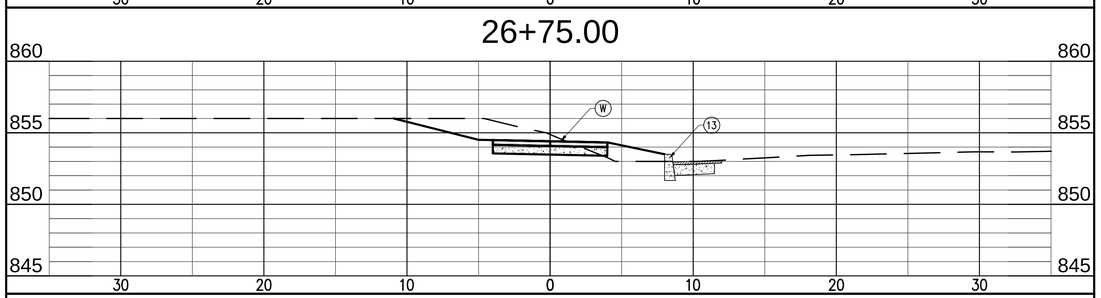

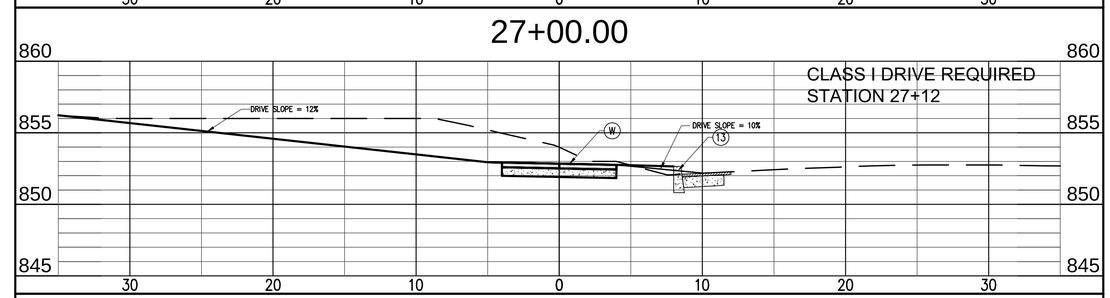

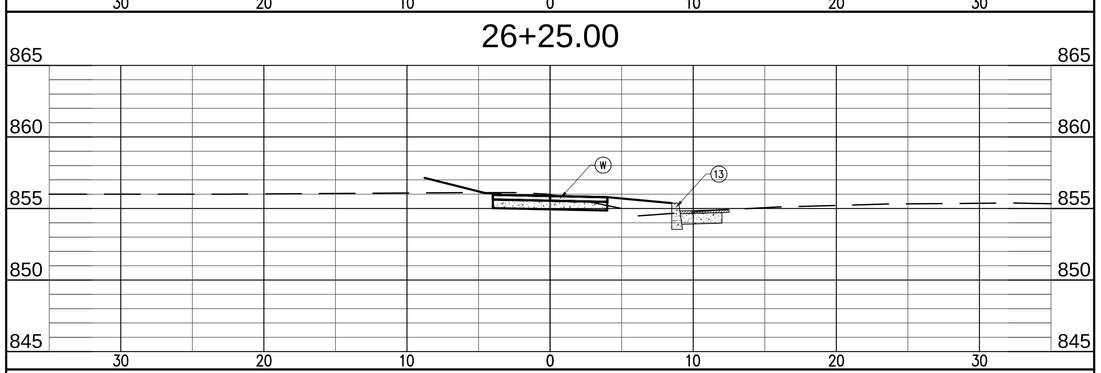

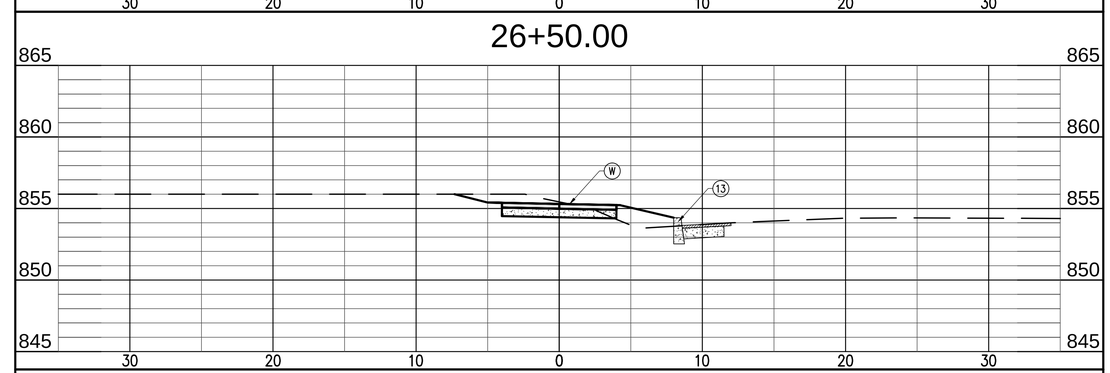

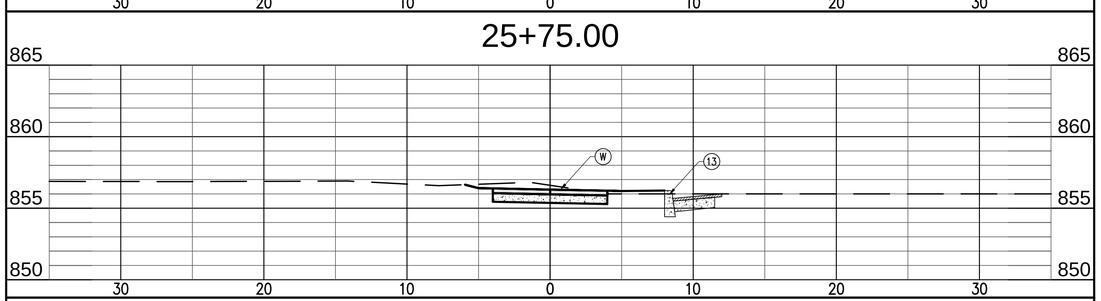

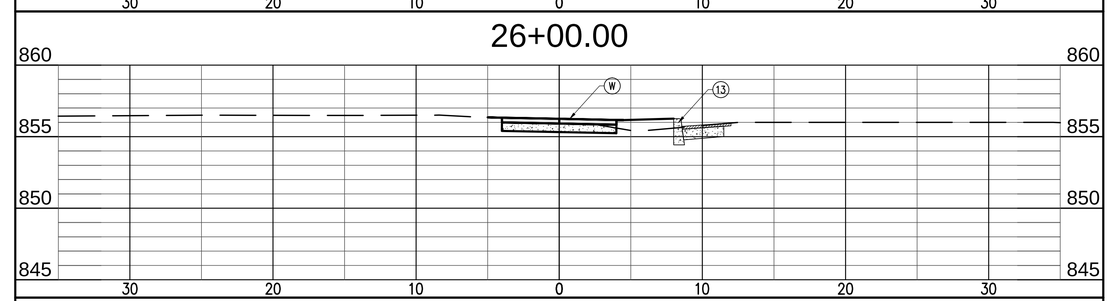

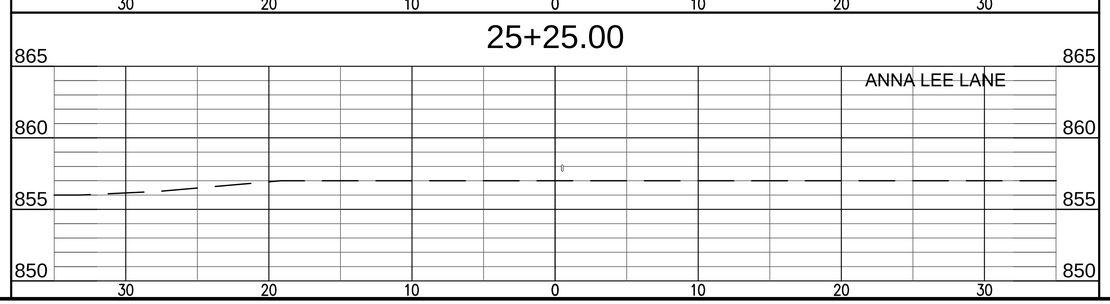

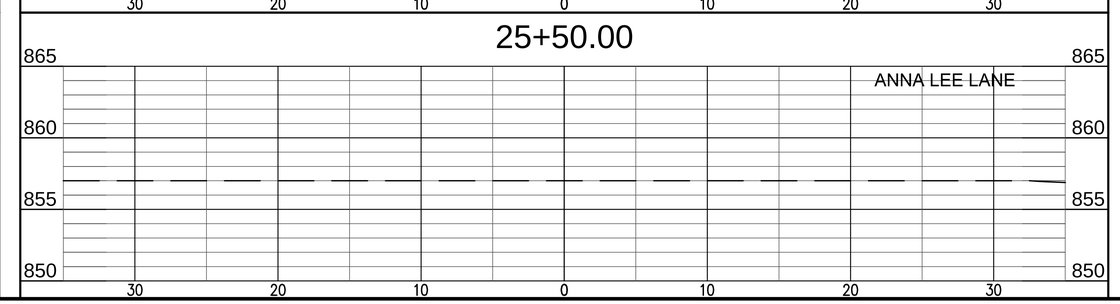

revisions:

ARCHITECTURE
CIVIL ENGINEERING
PLANNING
BYNUM FANYO & ASSOCIATES, INC.
528 north walnut street
(812) 332-8030
bloomington, indiana
(812) 339-2990 (Fax)

JEFFREY S. FANYO
No. 18283
STATE OF INDIANA
PROFESSIONAL ENGINEER
9-4-12
certified by:

PROPOSED
WEST 2ND STREET SIDEPATH
W. 2ND STREET
BLOOMINGTON, INDIANA

title: LINE 'P-1' CROSS SECTIONS

designed by: RC
drawn by: RC,JR
checked by: JSF
sheet no: C408
project no.: 400936

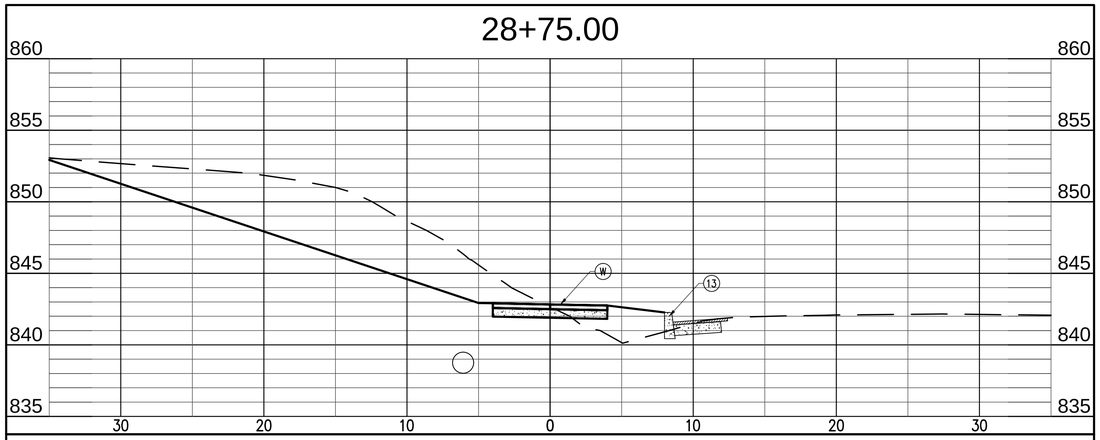

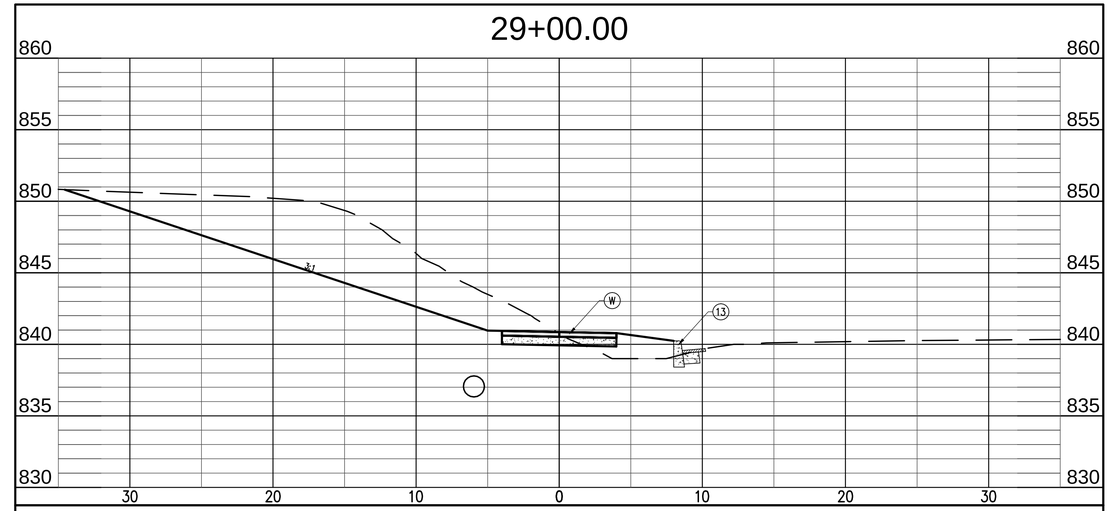

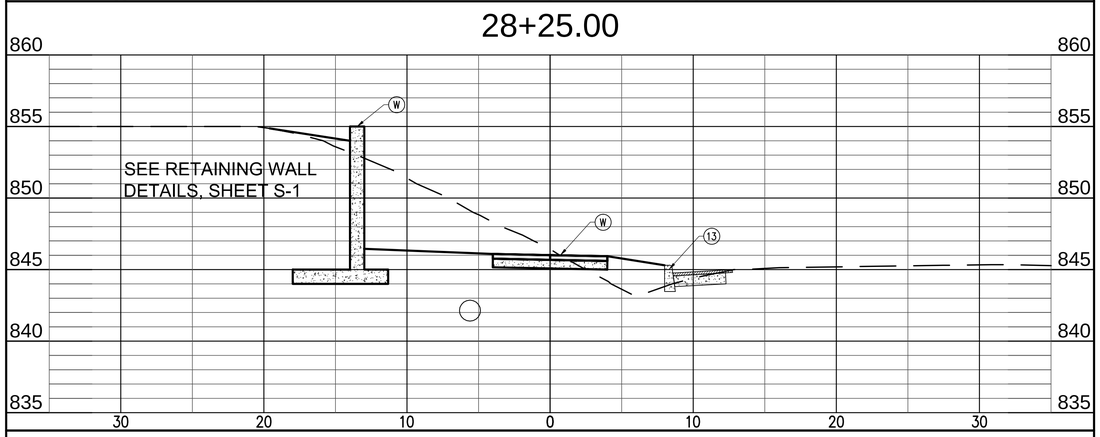

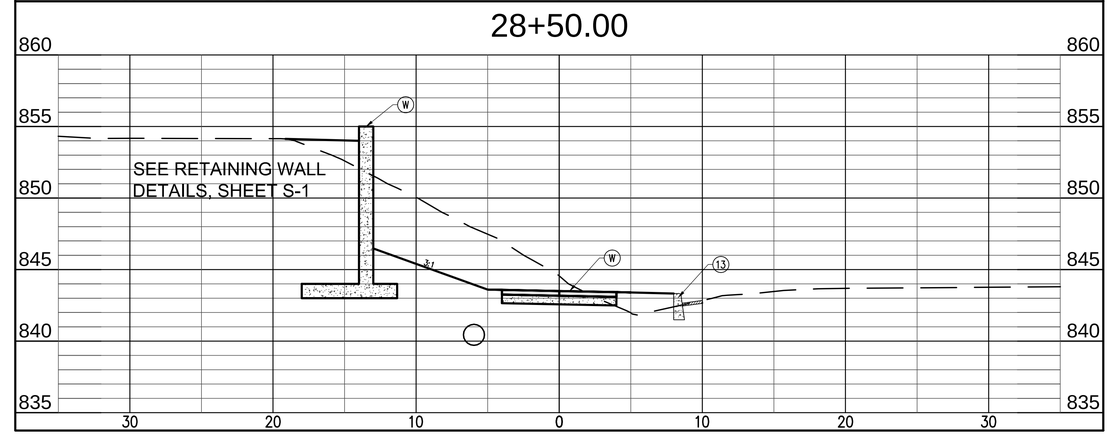

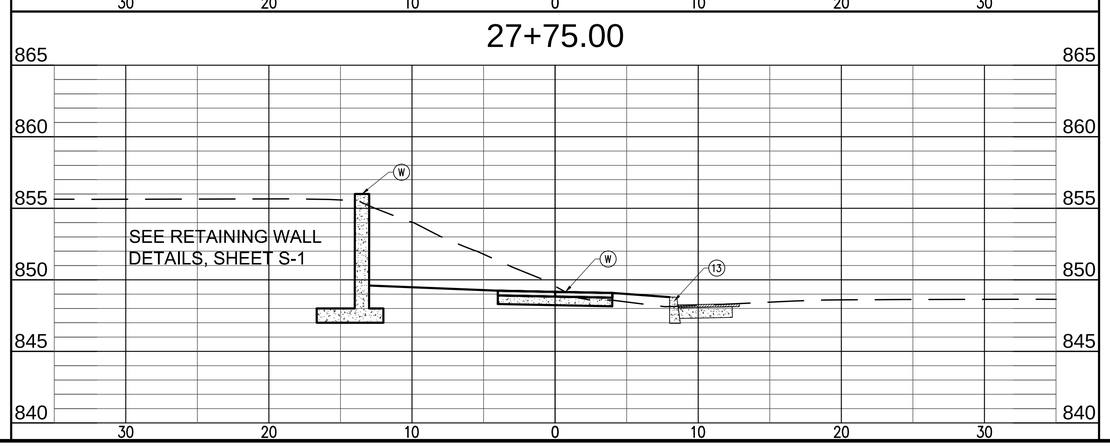

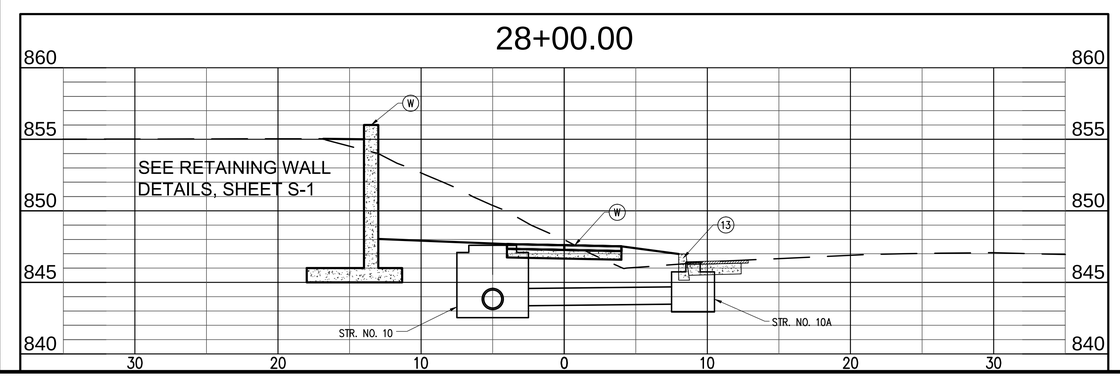

revisions:

ARCHITECTURE
CIVIL ENGINEERING
PLANNING
BYNUM FANYO & ASSOCIATES, INC.
528 north walnut street
(812) 332-8030
bloomington, indiana
(812) 339-2990 (Fax)

JEFFREY S. FANYO
No. 18283
STATE OF INDIANA
PROFESSIONAL ENGINEER
9-4-12
certified by:

PROPOSED
WEST 2ND STREET SIDEPATH
W. 2ND STREET
BLOOMINGTON, INDIANA

title: LINE 'P-1' CROSS SECTIONS

designed by: RC
drawn by: RC,JR
checked by: JSF
sheet no: C409
project no.: 400936

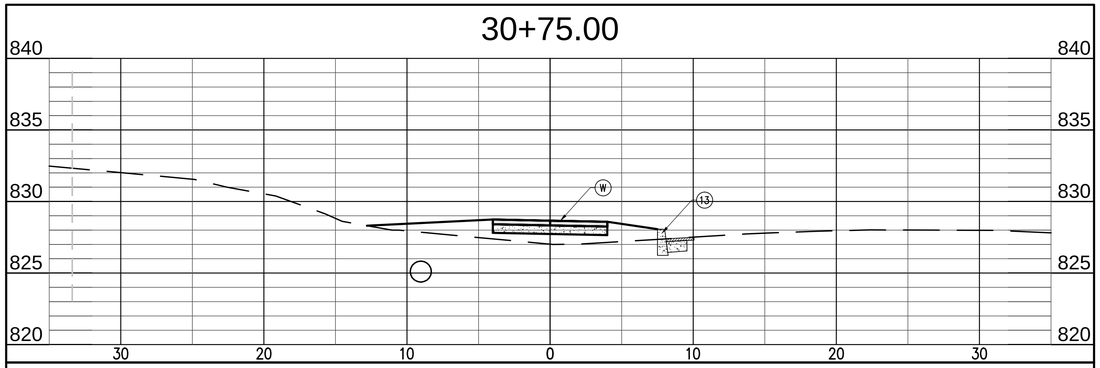

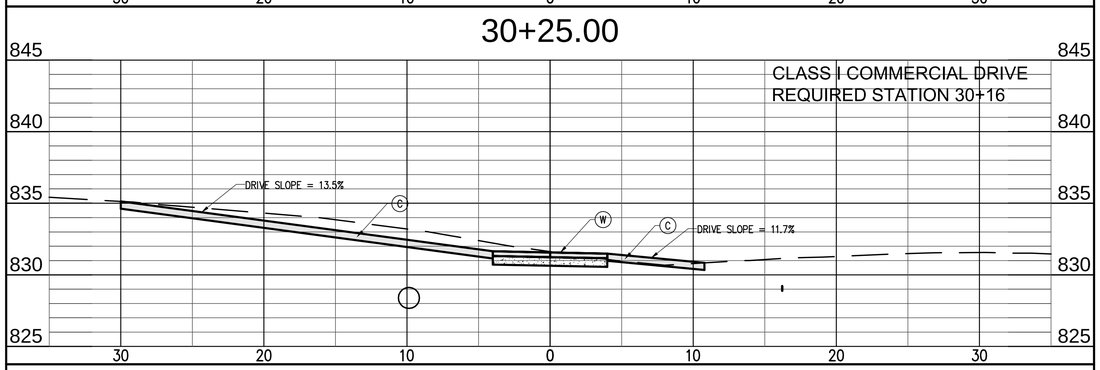

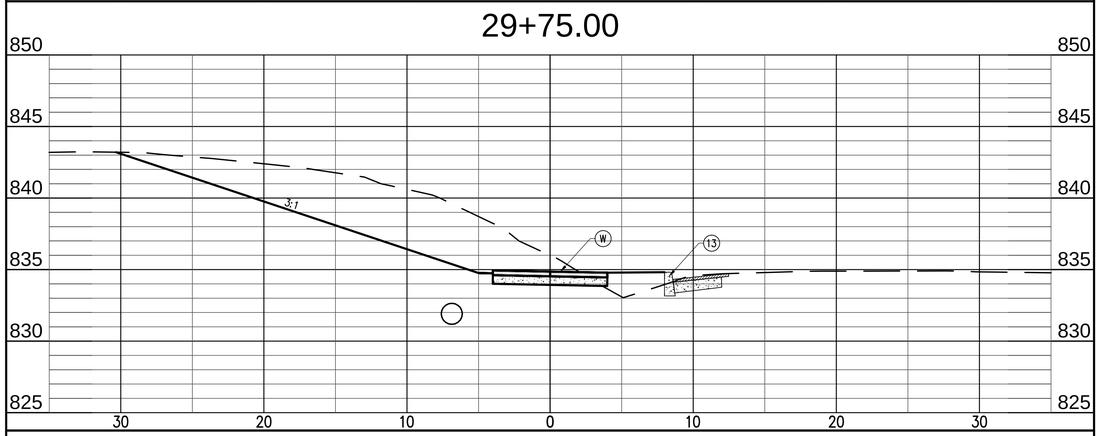

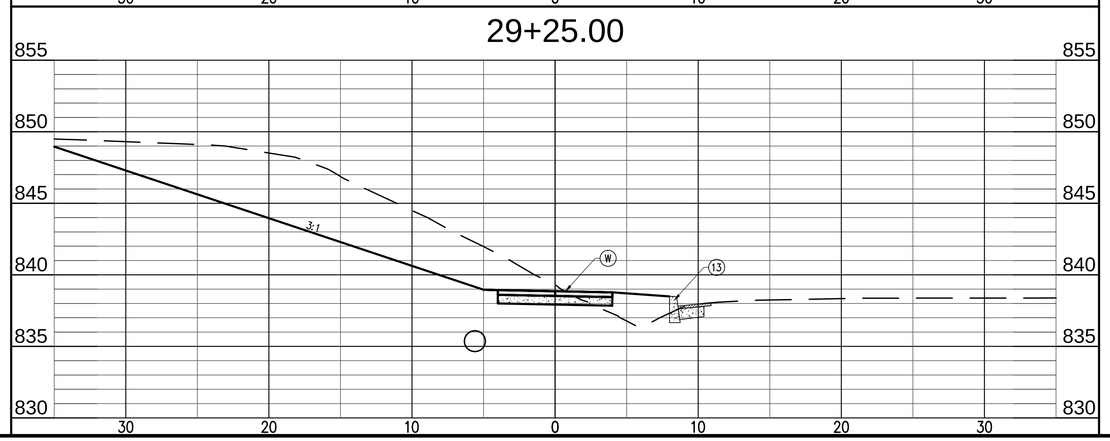

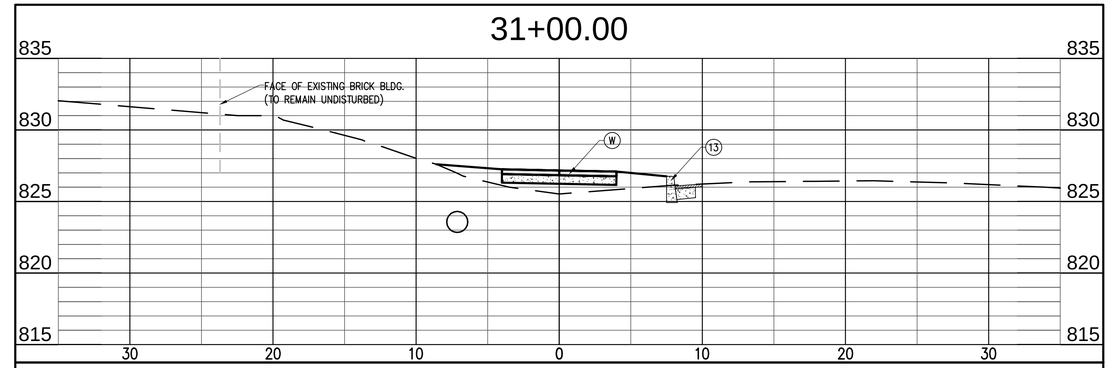

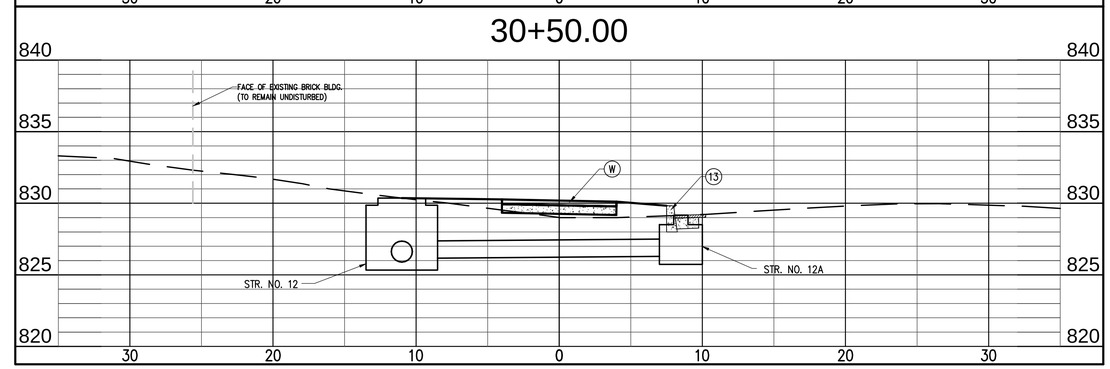

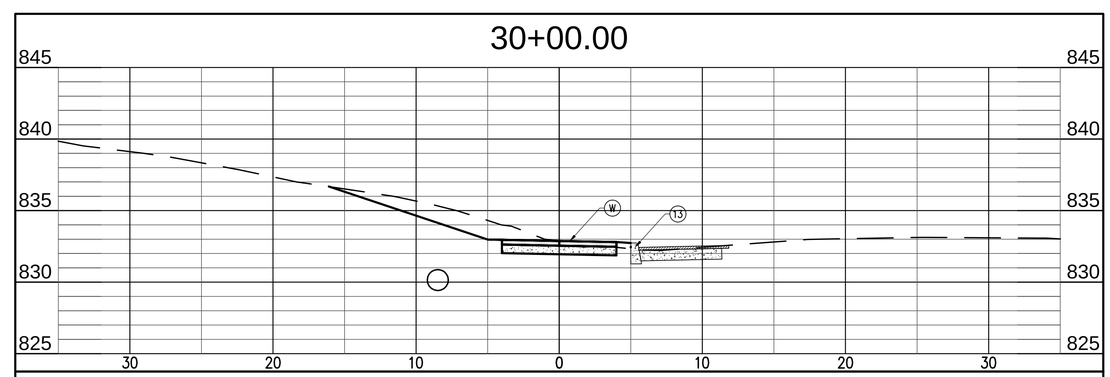

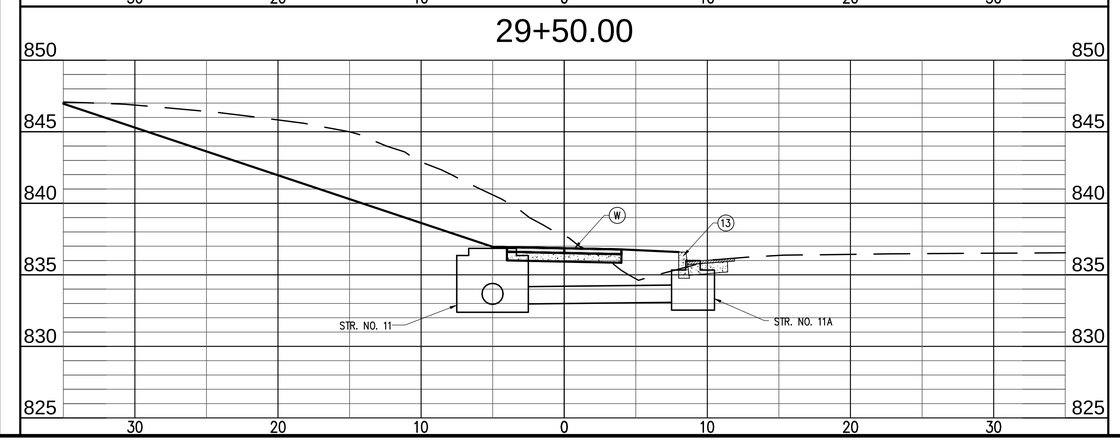

revisions:

ARCHITECTURE
CIVIL ENGINEERING
PLANNING
BYNUM FANYO & ASSOCIATES, INC.
528 north walnut street
(812) 332-8030
bloomington, indiana
(812) 339-2990 (Fax)

JEFFREY S. FANYO
No. 18283
STATE OF INDIANA
PROFESSIONAL ENGINEER

9-4-12

certified by:

PROPOSED
WEST 2ND STREET SIDEPATH

W. 2ND STREET
BLOOMINGTON, INDIANA

title: LINE 'P-1' CROSS SECTIONS

designed by: RC
drawn by: RC,JR
checked by: JSF
sheet no: C410
project no.: 400936

32+75.00

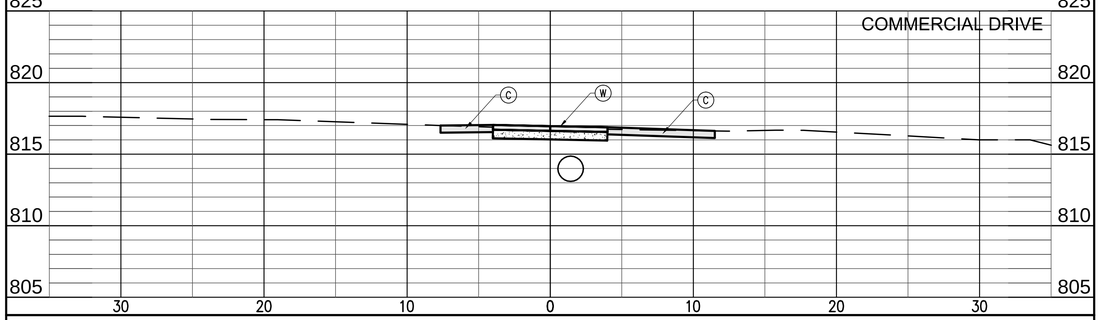

32+25.00

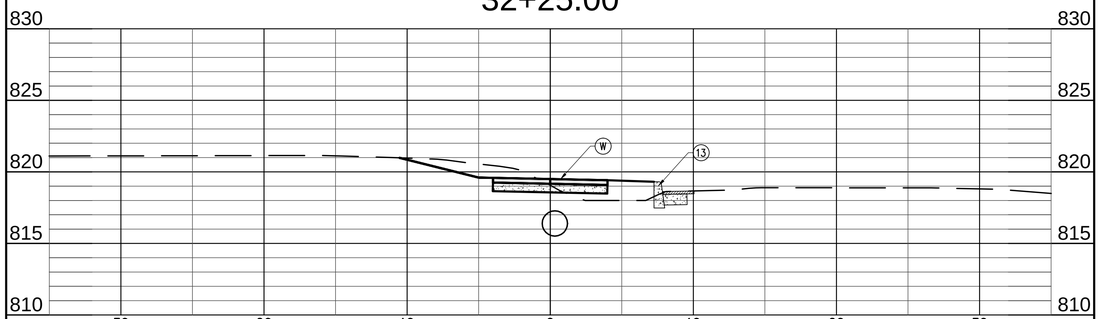

31+75.00

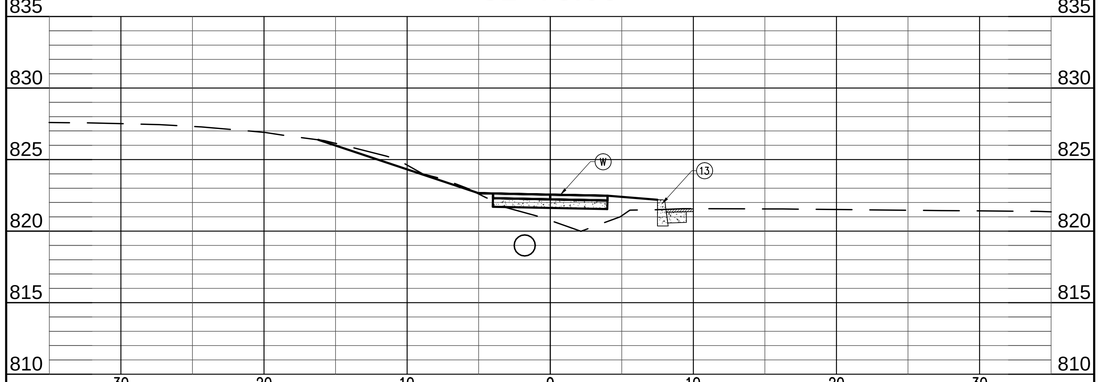

31+25.00

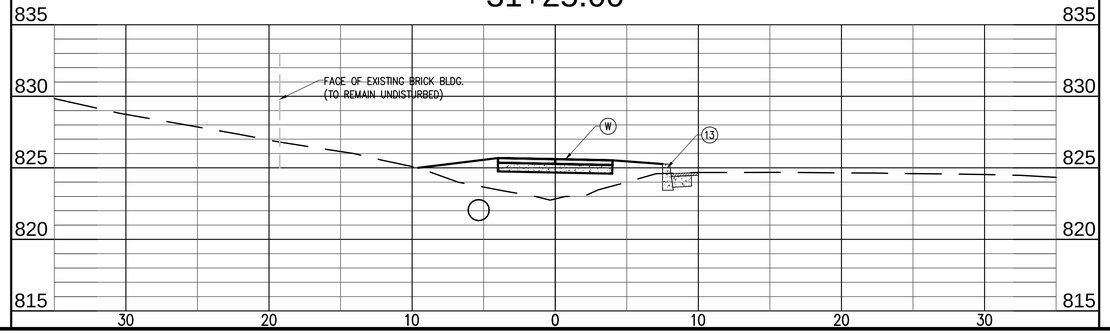

33+00.00

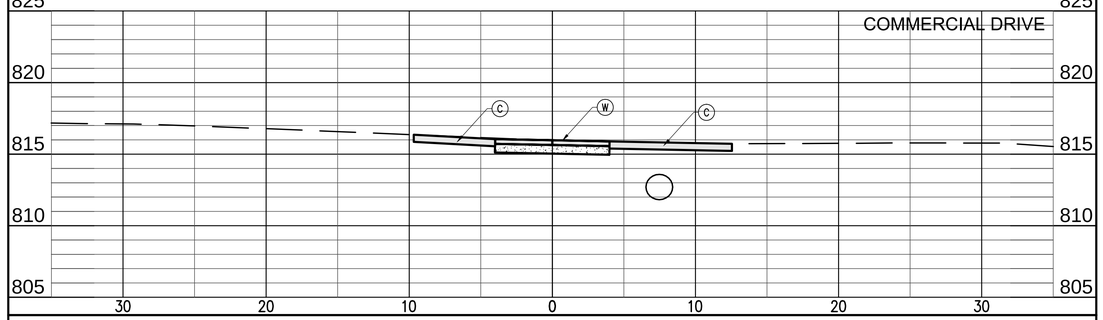

32+50.00

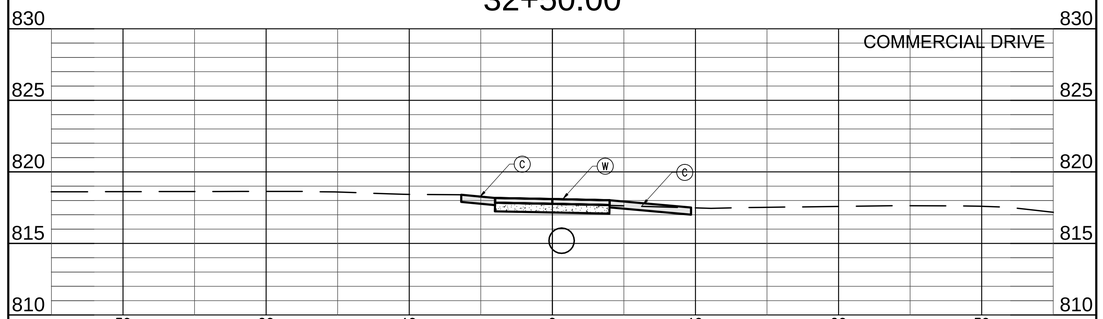

32+00.00

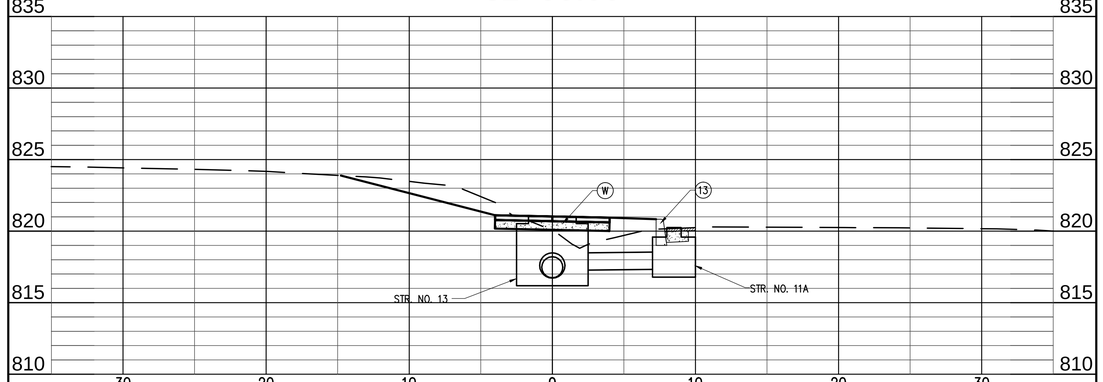

31+50.00

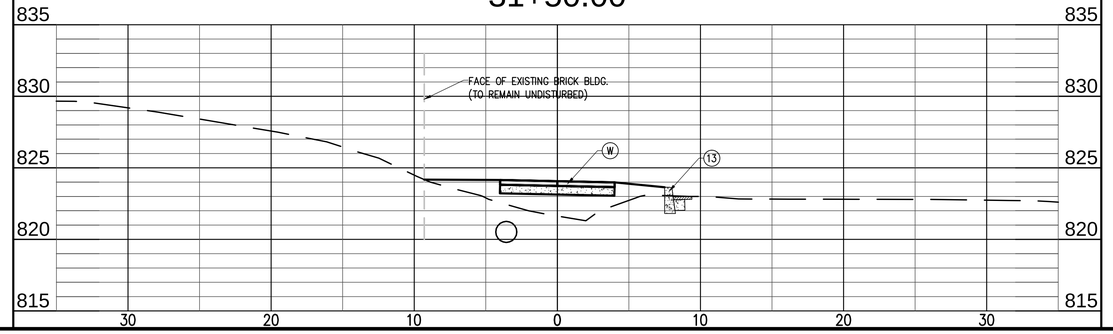

revisions:

ARCHITECTURE
CIVIL ENGINEERING
PLANNING
BYNUM FANYO & ASSOCIATES, INC.
528 north walnut street
bloomington, indiana
(812) 332-8030
(812) 339-2990 (Fax)

JEFFREY S. FANYO
No. 18283
STATE OF INDIANA
PROFESSIONAL ENGINEER
9-4-12

certified by:

PROPOSED
WEST 2ND STREET SIDEPATH

W. 2ND STREET
BLOOMINGTON, INDIANA

title: LINE 'P-1' CROSS SECTIONS

designed by: RC
drawn by: RC,JR
checked by: JSF
sheet no: C411
project no.: 400936

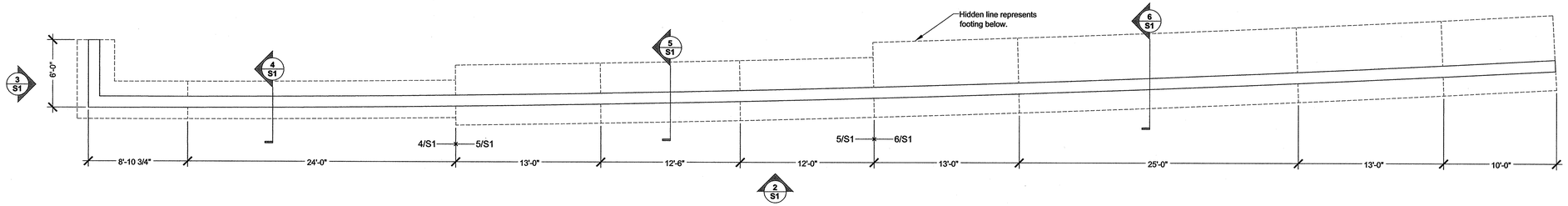

RETAINING WALL PLAN VIEW 1/S1
Scale: 3/16" = 1'-0"

North

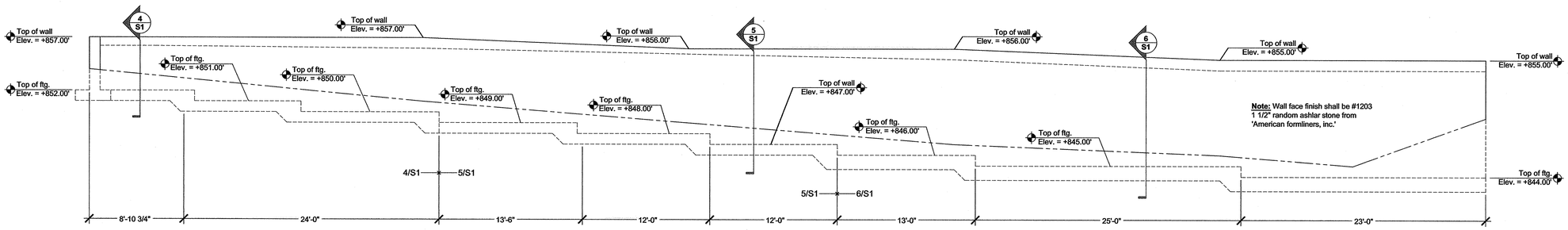

RETAINING WALL ELEVATION 2/S2
Scale: 3/16" = 1'-0"

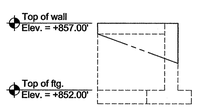

RETAINING WALL ELEVATION 3/S2
Scale: 3/16" = 1'-0"

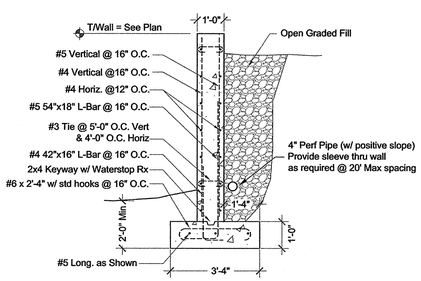

SECTION DETAIL 4/S1
Scale: 3/8" = 1'-0"

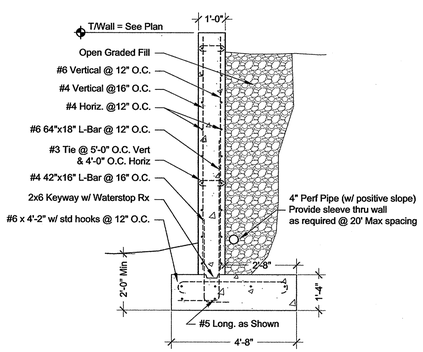

SECTION DETAIL 5/S1
Scale: 3/8" = 1'-0"

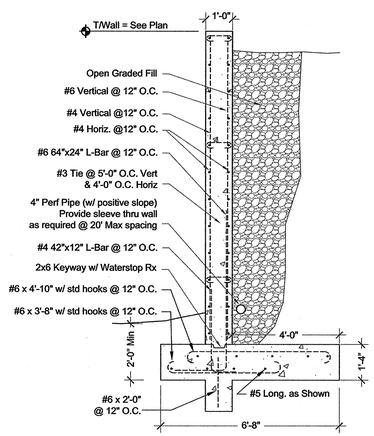

SECTION DETAIL 6/S1
Scale: 3/8" = 1'-0"

CONCRETE NOTES:

1) All formwork to be constructed per ACI 301.4.
2) Concrete shall be placed per ACI 301.8. Embedded items shall be installed per ACI 301.6.
3) Curing and protection of all concrete shall be per ACI 301.12.
4) Surface tolerance to be per ACI 301.11.9.1, finish per ACI 301.11.7.3

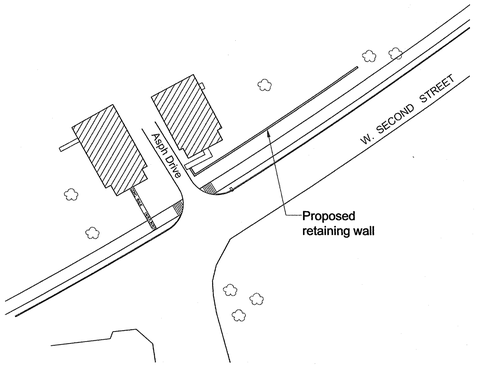

Key Plan
Scale: NTS

North

revisions:

drawn by: KLK

STRUCTURAL ENGINEERING

bloomington, indiana
(812) 824-5608 (Fax)

BFW Crane Inc.
6700 South Victor Pike
(812) 824-4260

REGISTERED PROFESSIONAL ENGINEER
NO. PE19500032
STATE OF INDIANA
3/31/2012

certified by:

Proposed:
Site Retaining Wall
West 2nd street Sidepath
Bloomington, Indiana

title: RETAINING WALLS

S-1

Sheet No:

project no.: N/A

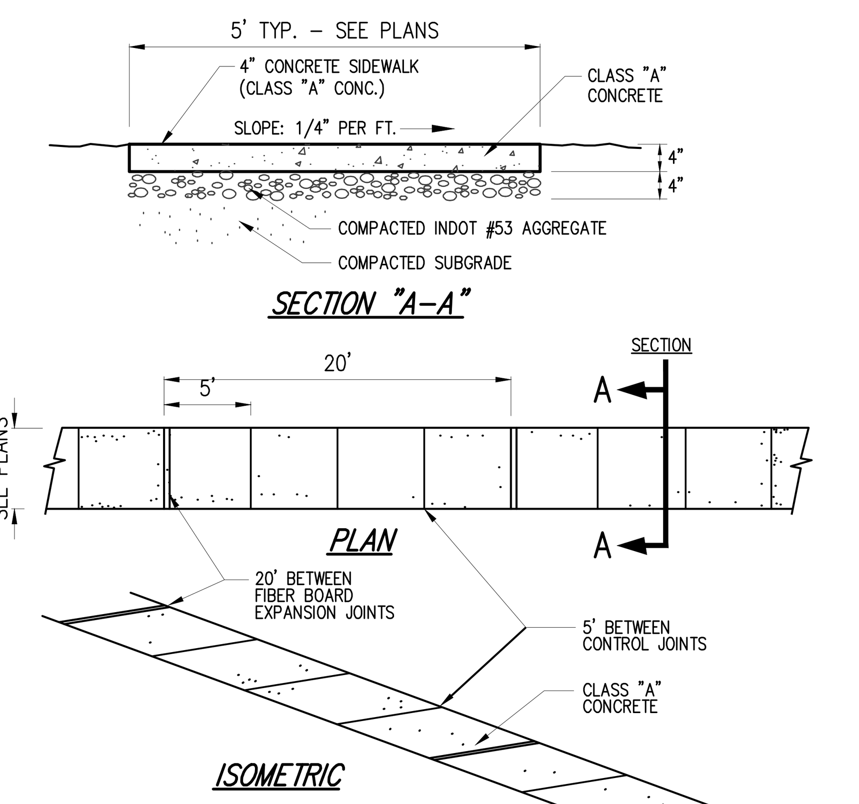

(F) CONCRTE SIDEWALK

NOT TO SCALE

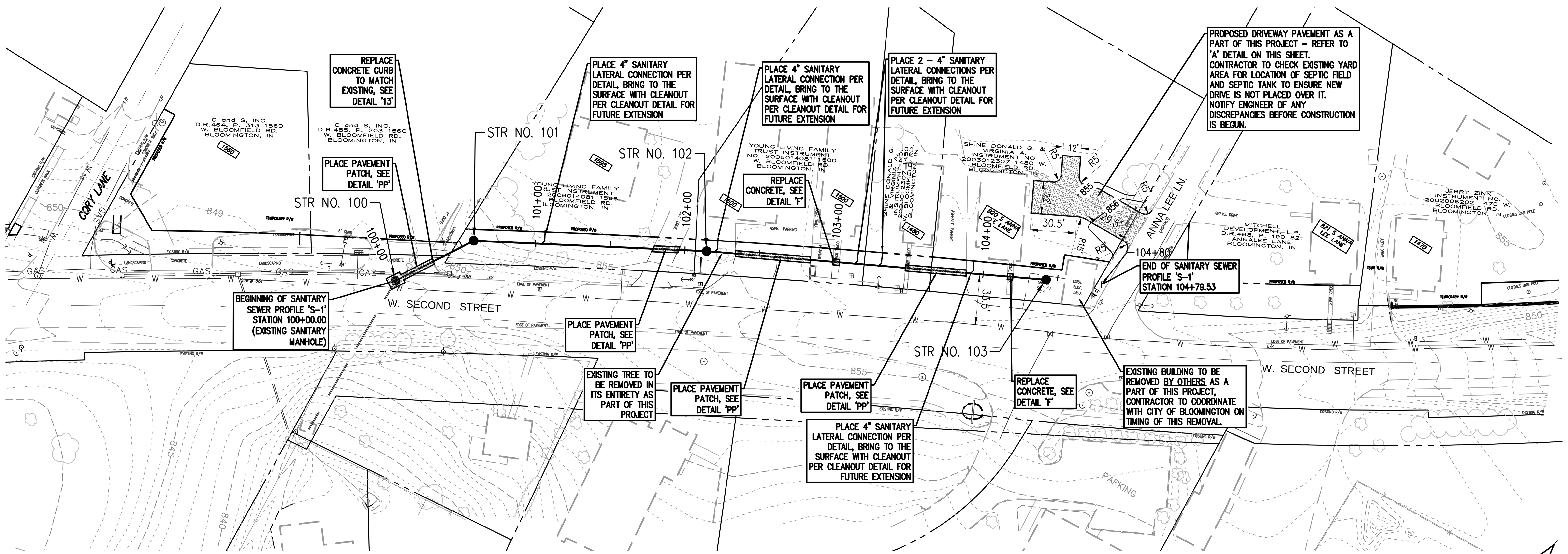

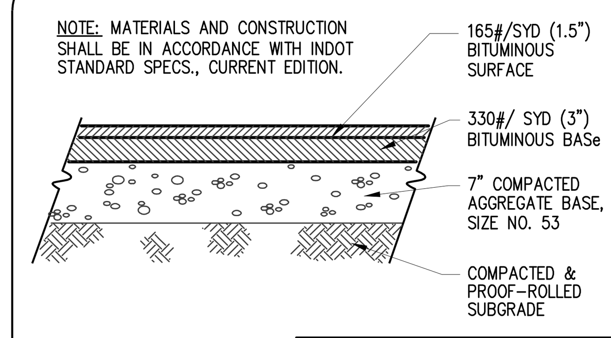

(A) BITUMINOUS ASPHALT PAVING

NOT TO SCALE

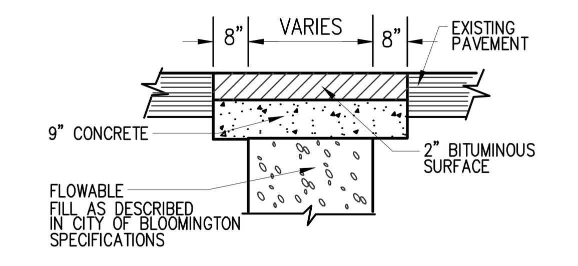

BYNUM FANYO & ASSOCIATES, INC.

(PP) BITUMINOUS PAVEMENT PATCH

NOT TO SCALE

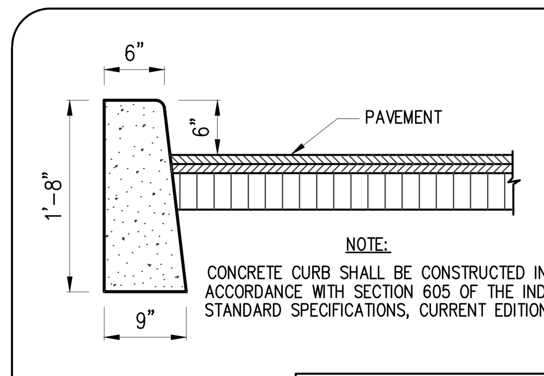

NOTE:
CONCRETE CURB SHALL BE CONSTRUCTED IN ACCORDANCE WITH SECTION 605 OF THE INDOT STANDARD SPECIFICATIONS, CURRENT EDITION.

BYNUM FANYO & ASSOCIATES, INC.

(13) CONCRETE CURB

NOT TO SCALE

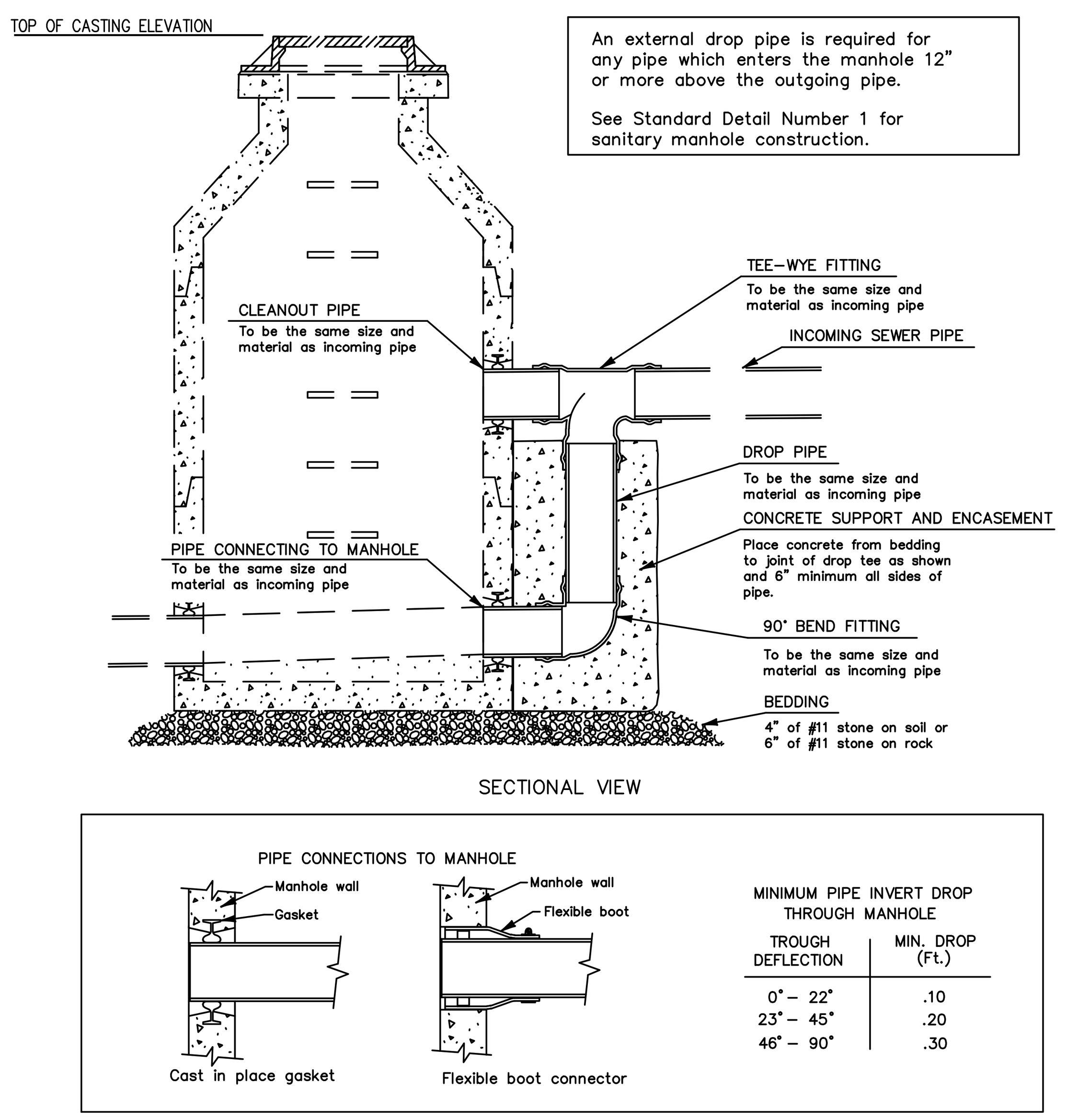

MINIMUM PIPE INVERT DROP THROUGH MANHOLE

TROUGH DEFLECTION	MIN. DROP (Ft.)
0° – 22°	.10
23° – 45°	.20
46° – 90°	.30

CITY OF BLOOMINGTON UTILITIES

EXTERNAL DROP PIPE DETAIL FOR SANITARY MANHOLE

CBU STANDARD DRAWING 2

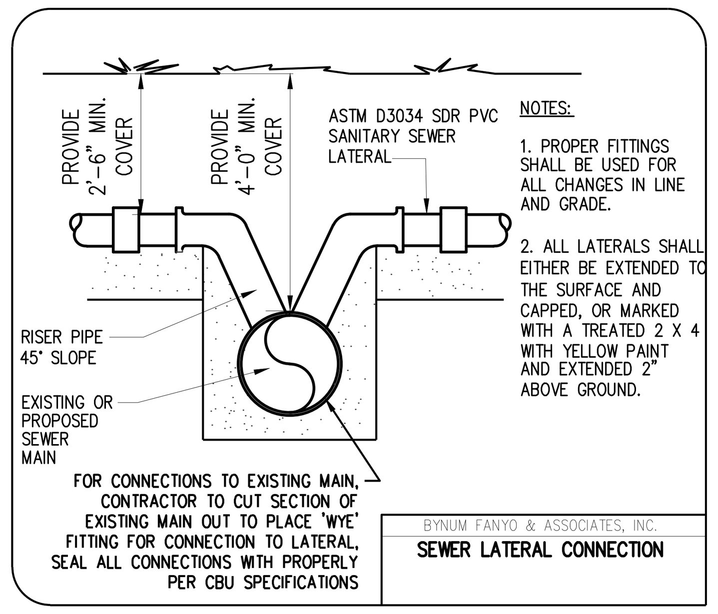

NOTES:
1. PROPER FITTINGS SHALL BE USED FOR ALL CHANGES IN LINE AND GRADE.
2. ALL LATERALS SHALL EITHER BE EXTENDED TO THE SURFACE AND CAPPED, OR MARKED WITH A TREATED 2 X 4 WITH YELLOW PAINT AND EXTENDED 2" ABOVE GROUND.

BYNUM FANYO & ASSOCIATES, INC.

SEWER LATERAL CONNECTION

EXCAVATION DEPTH
When pipe grades are not defined on the contract drawings, maintain a minimum of 48 inches of cover over the top of the pipe except as otherwise ordered by the Engineer.

TRENCH SAFETY SYSTEMS
All trench work shall be in compliance with OSHA Part 26 of the Code of Federal Regulations.

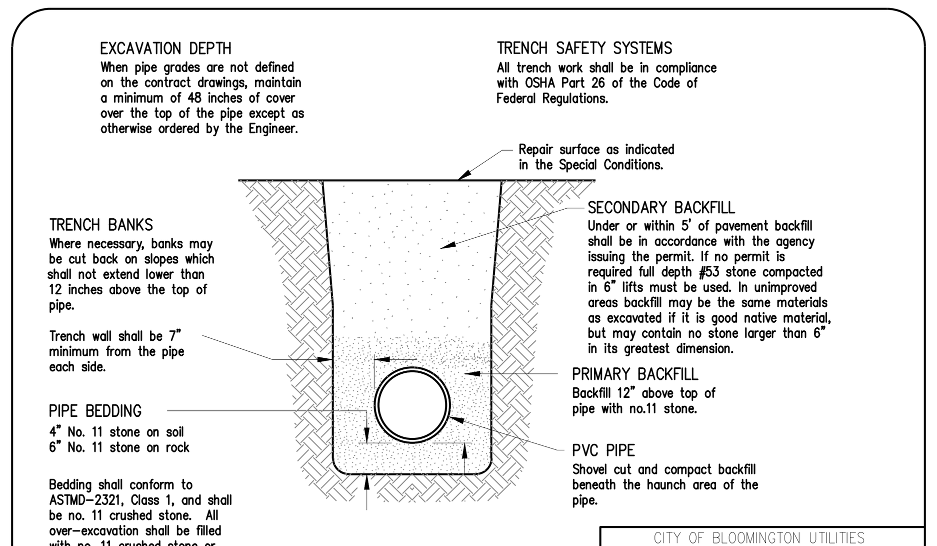

CITY OF BLOOMINGTON UTILITIES

BEDDING AND BACKFILL DETAIL FOR PVC & HDPE PIPE

CBU STANDARD DRAWING 11

HOLEY MOLEY SAYS
"DIG SAFELY"

"IT'S THE LAW"

CALL 2 WORKING DAYS BEFORE YOU DIG
1-800-382-5544
CALL TOLL FREE

PER INDIANA STATE LAW IC8-1-26.
IT IS AGAINST THE LAW TO EXCAVATE WITHOUT NOTIFYING THE UNDERGROUND LOCATION SERVICE TWO (2) WORKING DAYS BEFORE COMMENCING WORK.

S–1 PROFILE

HORIZONTAL SCALE: 1"=50'
VERTICAL SCALE: 1"=5'

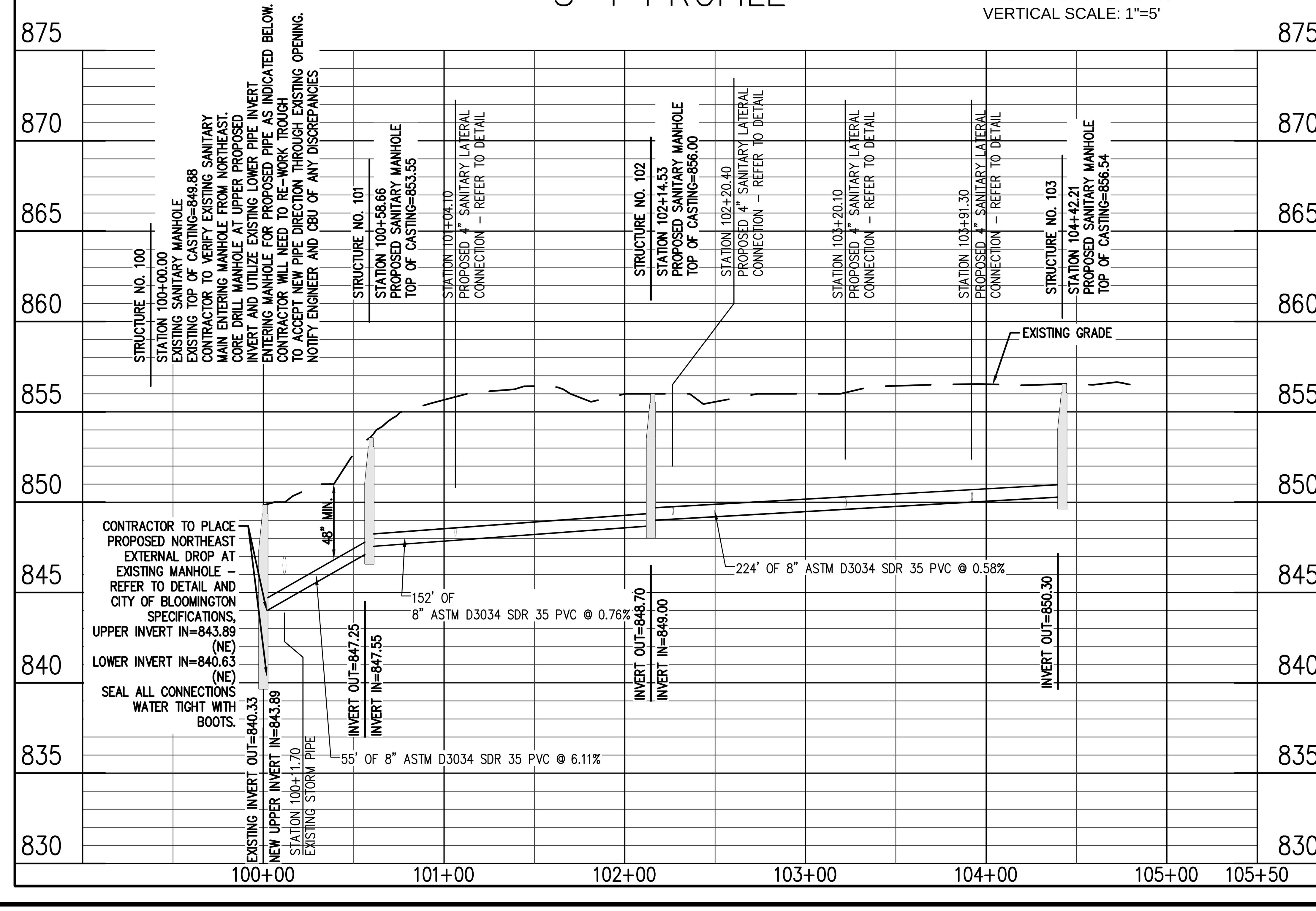

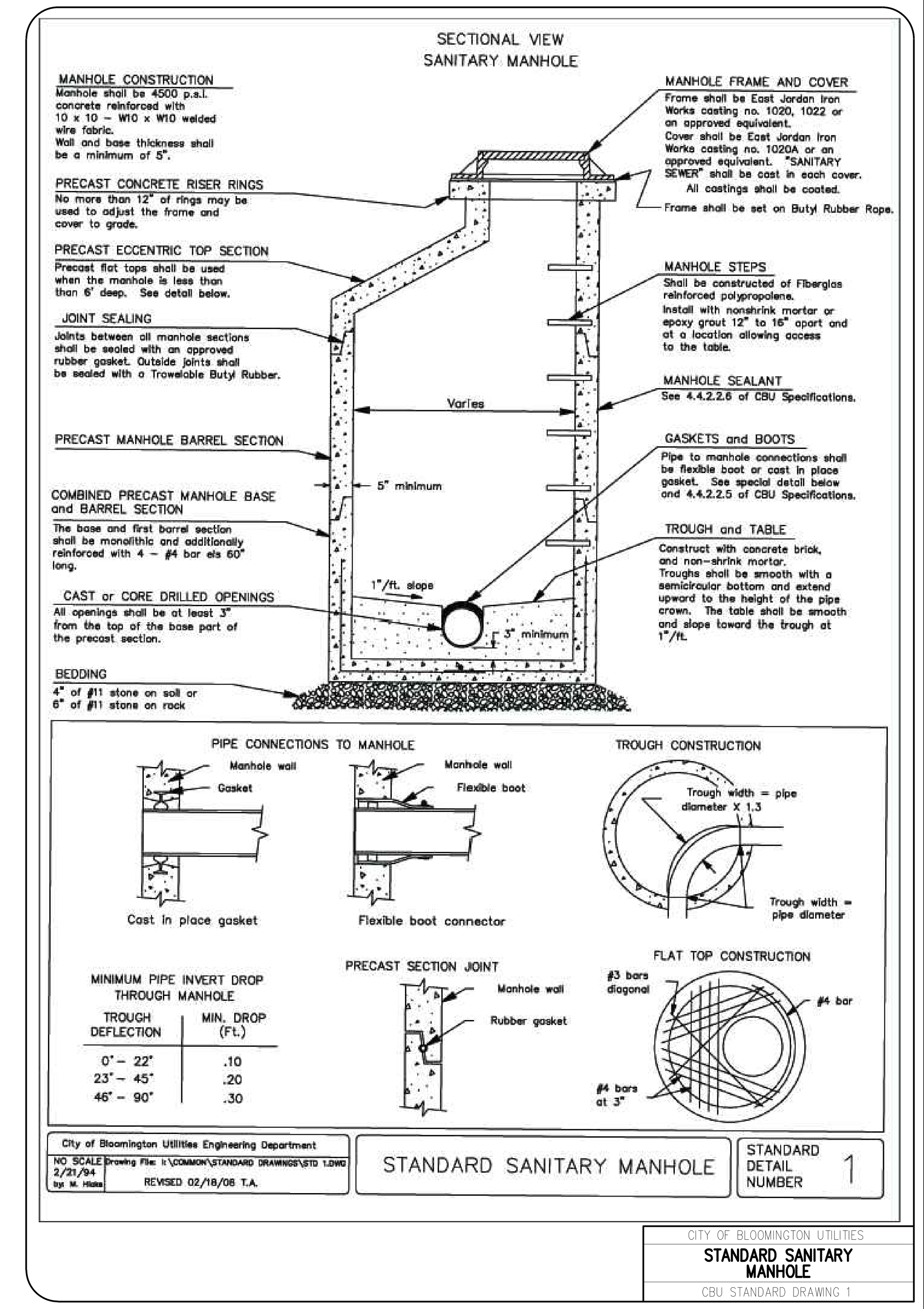

MINIMUM PIPE INVERT DROP THROUGH MANHOLE

TROUGH DEFLECTION	MIN. DROP (Ft.)
0° – 22°	.10
23° – 45°	.20
46° – 90°	.30

City of Bloomington Utilities Engineering Department
NO SCALE 2/21/94 by: M. Hicks | Drawing File: I:\COMMON\STANDARD DRAWINGS\STD 1.DWG | REVISED 02/18/08 T.A.

STANDARD SANITARY MANHOLE | STANDARD DETAIL NUMBER 1

CITY OF BLOOMINGTON UTILITIES

STANDARD SANITARY MANHOLE

CBU STANDARD DRAWING 1

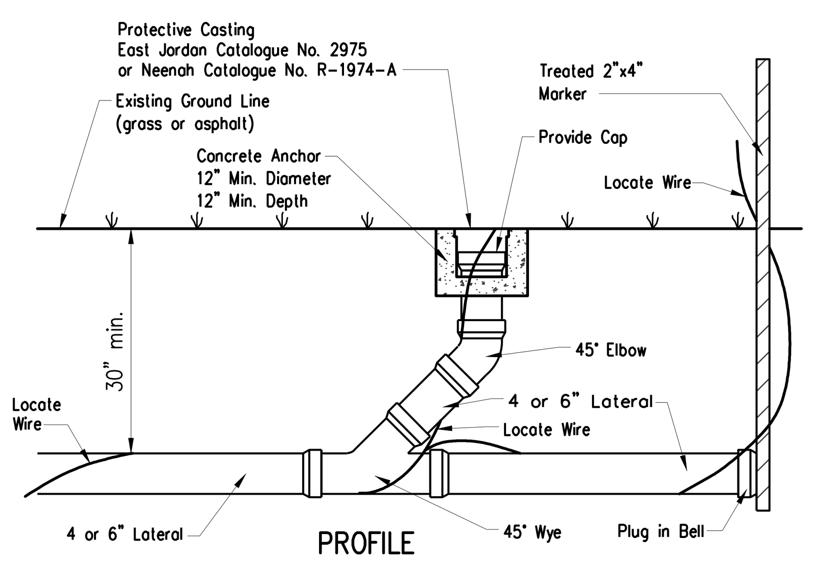

1. ALL CLEAN–OUTS, WEATHER IN GRASSY AREAS OR IN PAVEMENT, SHALL BE SUB–SURFACE AND PROTECTED BY A SUITABLE METAL CASTING, SUCH AS EAST JORDAN IRON WORKS CATALOGUE NO. 2975 OR NEENAH CATALOGUE NO. R–1974–A. IN GRASSY AREAS, THE CASTING SHALL BE PROVIDED WITH A CIRCULAR CONCRETE COLLAR FLUSH WITH THE TOP OF THE CASTING AND THE GROUND SURFACE. THE COLLAR SHALL BE MINIMUM 6" THICK AND SHALL EXTEND AT LEAST 8" BEYOND THE OUTSIDE OF THE CASTING ON ALL SIDES. IN PAVED AREAS, THE TOP OF CASTING SHALL BE FLUSH WITH THE PAVEMENT SURFACE. TOP OF CLEAN–OUT SHALL BE NO MORE THAN 3" BELOW THE TOP OF CASTING.

2. A CLEAN–OUT SHALL BE PROVIDED ON SANITARY SEWER LATERALS EVERY 90 FEET AND AT ALL BENDS.

3. A #10 INSULATED SOLID COPPER LOCATOR WIRE SHALL BE WRAPPED AROUND ALL NONMETALLIC PIPES IN THE ROAD RIGHT OF WAYS SO THAT ONE REVOLUTION IS MADE AT LEAST EVERY PIPE JOINT. SPLICES ARE TO BE MADE WITH AN APPROVED CONNECTOR, AND ARE TO BE SUITABLY PROTECTED AGAINST CORROSION. THE WIRE IS TO BE BROUGHT TO THE SURFACE AT THE PROPERTY LINE WITH A CLEAN–OUT IN A CASTING. ALSO SEE (STANDARD SANITARY LATERAL CLEAN–OUT DETAIL 19) CBU CONSTRUCTION SPECIFICATIONS.

CITY OF BLOOMINGTON UTILITIES

STANDARD SANITARY LATERAL CLEAN–OUT FOR 4" & 6" PIPES

CBU STANDARD DETAIL NUMBER 19

NOTE TO CONTRACTOR

CONTRACTOR SHALL VERIFY ALL UTILITY LOCATIONS & DEPTHS AND NOTIFY ENGINEER OF ANY INACCURACIES IN LOCATION OR ELEVATION OR ANY CONFLICTS PRIOR TO & AFTER ANY EXCAVATION. NO PAYMENT SHALL BE MADE TO CONTRACTOR FOR UTILITY DESTRUCTION OR UNDERGROUND CHANGES REQUIRED DUE TO CONFLICTING ELEVATIONS.

revisions:
09–02–14: STR. #103 RELOCATE. DJB

ARCHITECTURE
CIVIL ENGINEERING
PLANNING
BYNUM FANYO & ASSOCIATES, INC.
528 north walnut street
bloomington, indiana
(812) 332–8030
(812) 339–2990 (Fax)

JEFFREY S. FANYO
No. 18283
STATE OF INDIANA
PROFESSIONAL ENGINEER
11.08.13
certified by:

PROPOSED
WEST 2ND STREET SIDEPATH SANITARY SEWER CONSTRUCTION
W. 2ND STREET
BLOOMINGTON, INDIANA

title: SANITARY SEWER PLAN & PROFILE

designed by: JBT
drawn by: DJB
checked by: JSF
sheet no: C101
project no.: 400936