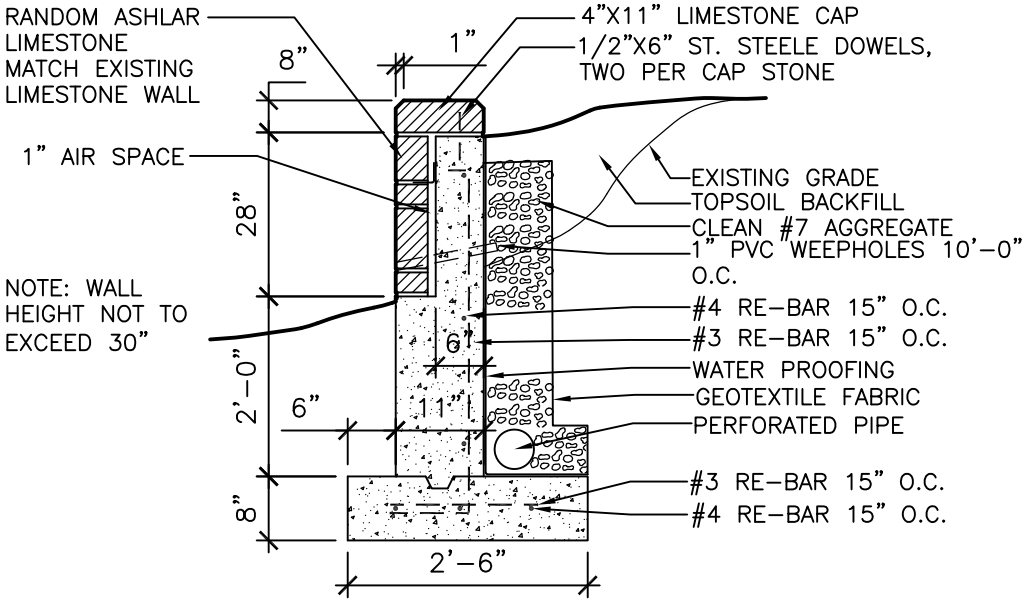

LIMESTONE RETAINING WALL DETAIL

SCALE: 1/2" = 1'-0"