KIRKWOOD AVENUE STREETSCAPE PHASE III
COLLEGE AVENUE TO ROGERS STREET

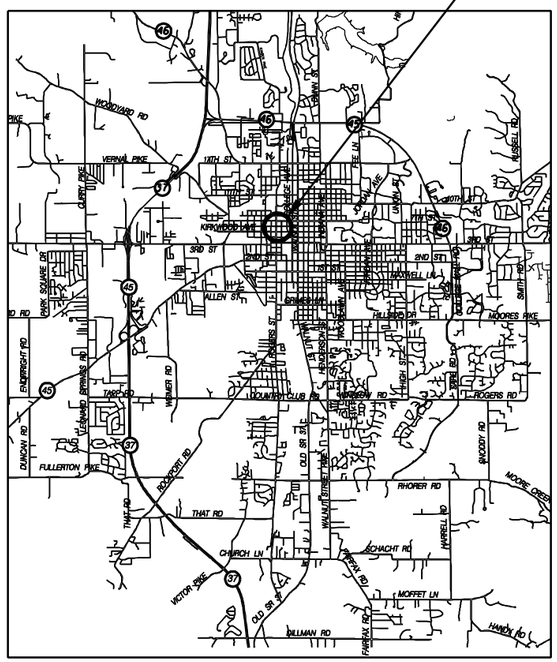

PROJECT LOCATION MAP

SCALE 1"=10,000'

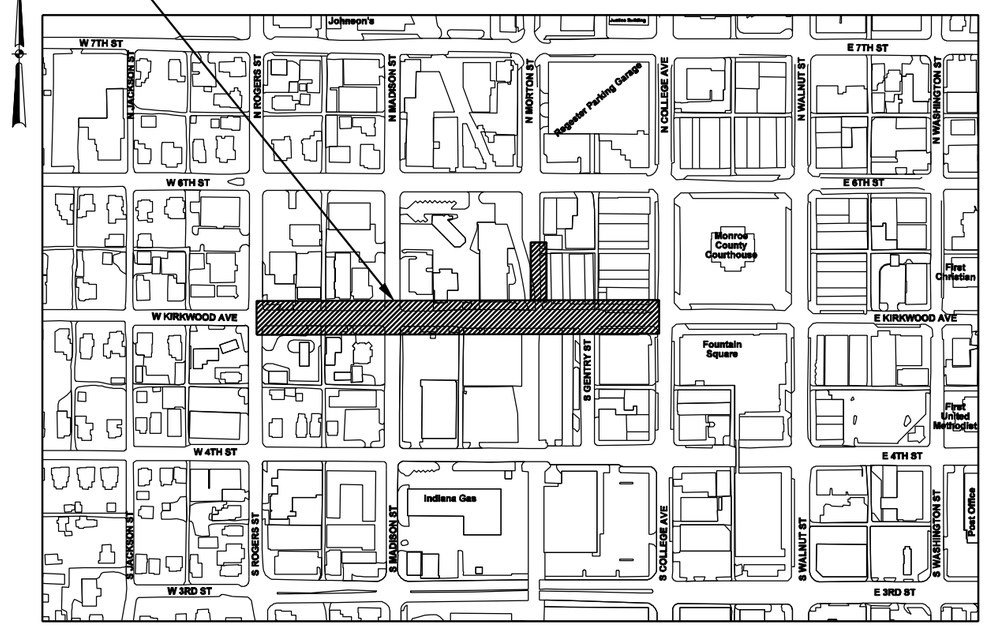

PROJECT SITE MAP

SCALE 1"=400'

DRAWING NO.	TITLE
-	TITLE SHEET
G1	GENERAL NOTES / LEGEND
L1	SITE LAYOUT AND GEOMETRICS
P1-P6	UTILITY PLANS & SOIL EROSION CONTROL
P7-P13	PROFILES
R1-R6	SURFACE RESTORATION PLANS
R7-R12	SURFACE GRADING PLANS
M1-M13	MISCELLANEOUS DETAILS
S1-S2	STRUCTURAL DETAILS
T1-T3	MAINTENANCE OF TRAFFIC PLAN

CERTIFIED: Paul N. Elling

DATE: 1-22-10

PAUL N. ELLING
REGISTERED
NO.
890275
STATE OF
INDIANA
PROFESSIONAL ENGINEER
Paul N. Elling 1-22-10

CITY OF BLOOMINGTON

PUBLIC WORKS - KIRKWOOD AVENUE STREETSCAPE
UTILITIES - STORM / SANITARY / WATER IMPROVEMENTS

DONOHUE & ASSOCIATES

101 WEST OHIO STREET, SUITE 820
INDIANAPOLIS, INDIANA 46204

TELEPHONE 317.267.8200
FAX 317.267.8201
WEB SITE: www.donohue-associates.com

UTILITIES

ELECTRIC
Duke Energy
1100 W. 2nd Street
Bloomington, In 47403
Attn: Kerry Ducker
(812) 337-3035

TELEPHONE
Ameritech
P.O. Box 56
Bloomington, In 47402
Attn: Brent McCabe
(812) 334-4521

GAS
Vectren
205 S. Madison
Bloomington, In 47404
Attn: Gary Hopkins
(812) 330-4031

CABLE TELEVISION
Comcast
2450 South Henderson St.
Bloomington, In 47401
Attn: Scott Templeton
(812) 355-7822

SEWER & WATER
City of Bloomington Utilities
P.O. Box 1216
Bloomington, In 47402
Attn: Phil Peden
(812) 349-3634

GENERAL LEGEND

- R/W MONUMENT & PROPERTY CORNER
- SIGN
- PANEL SIGN
- AIR CONDITIONER
- MAILBOX
- ELECTRIC METER
- GAS METER
- WATER METER
- TYPICAL SANITARY & STORM MANHOLES
- TYPICAL TELEPHONE MANHOLE
- TYPICAL ELECTRIC MANHOLES
- TYPICAL SIGNAL/LIGHTING/ COMMUNICATIONS HANDHOLE
- CURB INLET
- POWER POLE
- LIGHT POLE
- SIGNAL POST/MAST ARM
- GUY WIRE
- PROPOSED GAS & WATER VALVE
- EXISTING GAS & WATER VALVE
- PROPOSED FIRE HYDRANT
- EXISTING FITE HYDRANT
- POST
- SOIL BORING
- (O.H. Tele.) OVERHEAD TELEPHONE LINE
- (O.H. Elec.) OVERHEAD ELECTRIC LINE
- (Tele.) UNDERGROUND TELEPHONE LINE
- (Water) WATER LINE
- (Gas) GAS LINE
- TYPICAL EXISTING PIPES
- TREES
- PINES
- SANITARY SEWER PIPE
- STORM SEWER PIPE
- HEDGEROW
- RCP REINFORCED CONCRETE PIPE
- VCP VITRIFIED CLAY PIPE
- STY STORY
- BLD BUILDING
- CIP CAST IN PLACE (CONCRETE)
- PPC PRECAST, PRESTRESSED CONCRETE
- BIT BITUMINOUS
- CHAIN LINK FENCE
- WOODEN FENCE
- POST & CHAIN FENCE
- RETAINING WALL
- CENTER LINE
- PROPERTY LINE
- INDOT STANDARD DRUMS
- TYPE III-B BARRICADES
- TEMPORARY CONCRETE BARRIER WALL
- SOIL EROSION CONTROL DEVICES

EXISTING FEATURES GENERALLY SHOWN SHADED AND **PROPOSED FEATURES GENERALLY SHOWN BOLD.**

GENERAL NOTES

WORK DESCRIPTION: This is a streetscape project consisting of pavement reconstruction and resurfacing, curbing, new sidewalks and brick pavers, pavement markings, landscaping, street lighting, water and sewer utility replacements, and other with incidental work including replacement of a portion of the Spanker's Branch storm culvert. The old section of the Spanker's Branch culvert is to be completely removed. Work on the Spanker's Branch culvert shall be by open cut methods. Bypass pumping may be required to control flows. Flows during wet weather shall not be reduced from the current capacity in the culvert.

The Contractor is required to perform utility relocation work noted in the plans, and to coordinate with Utilities that may also need to perform work in the area.

Maintenance of traffic (vehicular and pedestrian) and the continuous maintenance of access (to businesses and to residences) with appropriate consideration for the protection of the public, are to be provided at all times. All businesses and residences must be provided continuous access during construction. Temporary walkways shall be provided for pedestrian assess at all times including when adjoining street sections are closed to traffic. Any interruptions to access shall be for very short duration and shall be coordinated with the property owner.

All work shown on the drawings or specified in the contract documents and other work which may be incidental to the denoted work shall be included in the contract lump sum price.

The OWNER will provide the following equipment and materials to the CONTRACTOR and the CONTRACTOR shall install supplied equipment and materials where shown in accordance with the manufacturers instructions or as shown on the drawings:
Benches - Dumor series 92 six (6) ft bench
Trash Receptacles - Victor Stanley Ironsites Series SD-S42
Bicycle Loops - Wabash Valley model BL100N (in ground mount)
Street Light Poles - Union Metal 16 flute tapered 12 ft mounting height with #37 split cast iron decorative base with GFCI duplex outlet
Street Light Luminaires - Sternberg Lighting model A850SRLED-4ARC45T3 (66 Watt LED)
Sternberg Lighting model A850SRLED-2ARC45T3 (35 Watt LED)
Intersection Light Poles - Union Metal 20 ft Tapered steel span pole with span wire clamp
Intersection Light Luminaires - Bega model 9484MH -100W ED17 with #477 Bega cable hanger (photocell control to be supplied by contractor)
Tree Grates - East Jordan Iron Works 8583 Chelsea

Salvaged Materials - All existing tree grates, metal mastarms, bike loops, trash cans, metal light poles in front of Kirkwood building, castings, and fencing materials are to be retained by the City or property owners. Deliver City owned materials to location designated by City.

SIGNS: Contractor is to contact City Traffic Division (Derek Neff at 812-349-3452) to have city owned signs and mast arm removed prior to work and have signs reset after work. Contact shall be made at least 5 days in advance for removal. Contractor shall prepare locations in sidewalks for replacement signs by inserting a 4" PVC sleeve at proposed locations per detail sheet M4.

TREE INSTALLATIONS: OWNER will plant new trees which are shown on the drawings.

TEMPORARY BUSINESS ACCESS SIGNS: When adjacent street has been closed to vehicular traffic or pedestrian access has been changed due to the construction, the Contractor shall prepare signs identifying access points for businesses along the closed street or where access is changed. The sign shall be of standard materials, unlighted, and mounted on a typical construction sign standard. Letters for business names shall be a minimum of 6" high and be easily visible from the passing vehicles and pedestrians. The maximum size of any sign for a single business shall be 10 sq. ft. in area. The sign shall only be maintained for as long as the business access is affected. The sign shall only be used to assist the general public in gaining access to the business and no advertising shall be permitted on the sign.

STREET RESURFACING: Streets shall be resurfaced to construction limits and to the grades shown in the plans. Upper 1.5" of any resurfacing to be #11 surface (INDOT Standards) placed over #5D base. See "R" sheets for paving plans. See pavement section sheet M3 for full depth pavement section. All castings and covers shall be reset to be flush with resurfacing.

USE OF INDOT STANDARD SPECIFICATIONS: Materials and workmanship of the following work items shall be as required by the INDOT 2010 Standard Specifications.
Bituminous Paving Sec. #402
Seeding And Sodding Sec. #621
Erosion Control Sec. #205
Concrete Pavements Sec. #501 (Detailed in Plans)
Curbs Sec. #605 (Detailed in Plans). All curb to be poured monolithic with adjacent sidewalk if sidewalk exists adjacent to curb.
Pavement Markings Sec. #808
Fencing Sec. #603

INSTALLATION OF WATER AND SEWER SERVICE: Water and sewer service laterals are anticipated to be impacted by this work and are to be replaced as part of this project. Contractor shall install approved service taps and replace water service lines to the outside of each building. All water services are to include the installation of a new 2" service tap and a meter setter. Meters will be installed by OWNER. Sewer service laterals are to be replaced only if they are damaged or impacted by the new facilities.

CONNECTION OF EXISTING DRAIN PIPES TO NEW BOX CULVERT: Contractor is required to reconnect all pipes which are found to be draining into the existing box culvert regardless of size or condition. Only pipes which are specifically called out for removal are exempt from this requirement. Pipe joints shall be made outside of the new box culvert wall in accordance with the construction specifications, unless otherwise shown on the plans. Existing drain pipes are generally not shown on the plans, but must be connected.

USE OF EASEMENT/RIGHT OF WAY: Contractor is allowed to use the areas shown on the plans as "Proscriptive Easement", "Right of Entry", or "Right Of Way" during construction. However, no materials or equipment shall be stored in a location or manner which presents a hazard to the public or the environment. The safeguard of materials remaining in these areas is the sole responsibility of the Contractor. Contractor shall be responsible for obtaining rights for any additional areas needed including for staging and storage. Contractor shall stake easements and right of way prior to commencing work. Contractor shall make arrangements and pay for any additional areas required for his work.

COORDINATION OF DRAWINGS, SPECIAL CONDITIONS, CONSTRUCTION SPECIFICATIONS AND STANDARD SPECIFICATIONS: The contract documents are intended to be complementary and to describe and provide for complete work. A requirement appearing in one is binding as though occuring in all. In case of discrepancy, the following order of precedence will apply:
1. Documents appearing within the project manual, including the special conditions.
2. Project drawings as listed in the agreement.
3. Construction Specifications for Sanitary, Water, and Storm Projects, as published by City Of Bloomington Utilities (most recent version as of bid date).
4. Standard Specifications as published by the Indiana Department Of Transportation, 2010.
5. INDOT Standard drawings.

PRESENCE OF UTILITIES: Existing utilities shown on plans are shown in accordance with available records, and physical evidence. Other utilities may also be present. Exact locations and elevations of all potentially conflicting utilities shown on the drawings are to be located in plan and elevation by the CONTRACTOR at least 2 weeks prior to beginning excavation work in the vicinity of the potential conflict to allow adequate time for relocations which may be needed.

GAS MAINS and SERVICE RELOCATIONS: Some gas mains and services are anticipated to require relocation due to the work required by this project. When conflicts are discovered, contractor shall contact Vectren to have gas mains and services relocated.

PAUL N. ELLING
REGISTERED
NO.
890275
STATE OF
INDIANA
PROFESSIONAL ENGINEER
1-22-10

Revision Number	Revision Description	Drawn By	Checked By	Date

Designed By	JAB
Drawn By	JAB
Checked By	PNE
Approved By	PNE
Filename	344G02.DGN
Project No.	11715
Project Date	1/22/10

CITY OF BLOOMINGTON DEPT. OF PUBLIC WORKS
KIRKWOOD AVENUE STREETSCAPE PHASE III
COLLEGE AVENUE TO ROGERS STREET
BLOOMINGTON, INDIANA

GENERAL NOTES / LEGEND

DONOHUE & ASSOCIATES

Sheet No. 2

Drawing No. G1

$TIME$
$DATE$
$FILE$

...\Projects\11715\Dwg\344g02.dgn 1/27/2010 3:29:20 PM

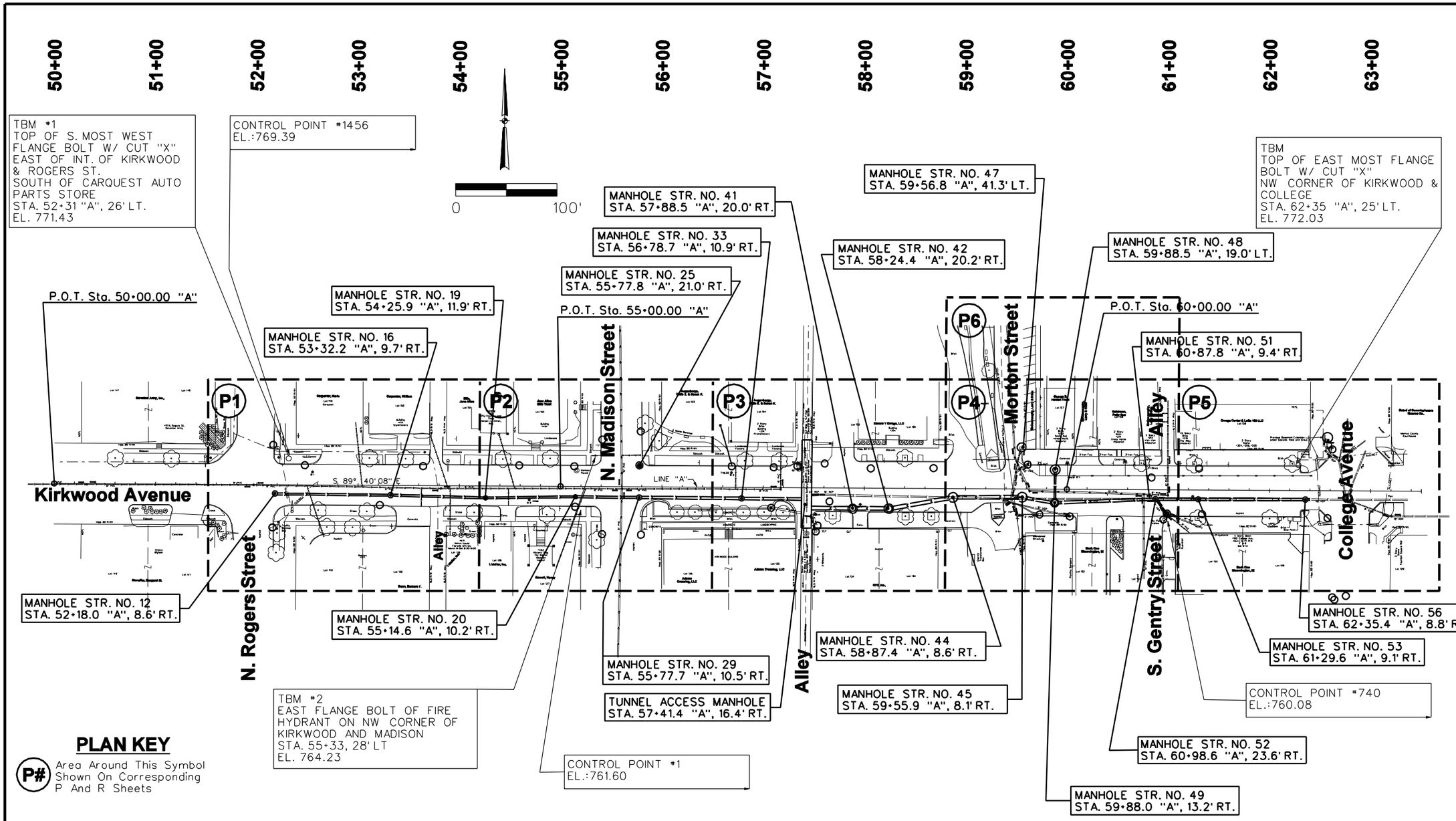

PLAN KEY

P# Area Around This Symbol Shown On Corresponding P And R Sheets

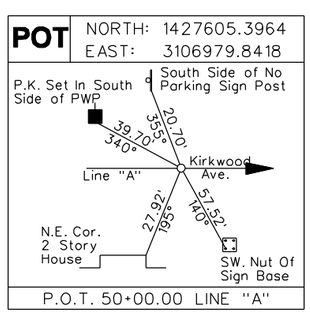

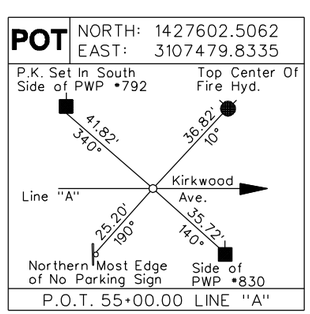

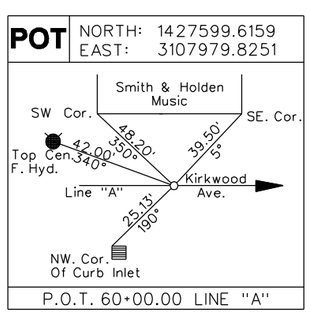

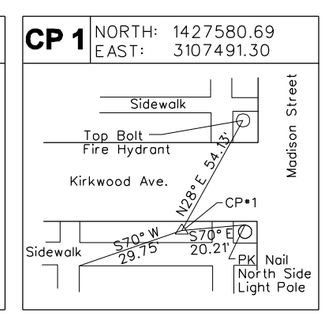

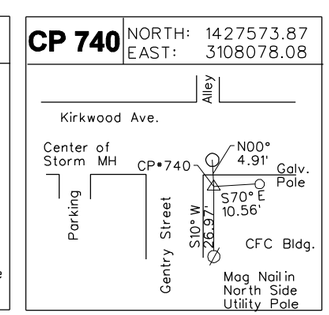

PAUL N. ELLING REGISTERED NO. 890275 STATE OF INDIANA PROFESSIONAL ENGINEER

1-22-10

Revision Number	Revision Description	Drawn By	Checked By	Date

Designed By	JAB
Drawn By	JAB
Checked By	PNE
Approved By	PE
Filename	344TY01.DGN
Project No.	11715
Project Date	1/22/10

CITY OF BLOOMINGTON DEPT. OF PUBLIC WORKS
KIRKWOOD AVENUE STREETSCAPE PHASE III
COLLEGE AVENUE TO ROGERS STREET
BLOOMINGTON, INDIANA

SITE LAYOUT

DONOHUE & ASSOCIATES

Sheet No. 3

Drawing No. L1

$TIMES $DATES $FILES

...\Projects\11715\Dwg\344ty01.dgn 1/22/2010 11:38:04 AM

52+00

53+00

54+00

N. Rogers Street

Carpenter, Marie
Lot 149
Carquest

Carpenter, William
Lot 150
Building
#414
Stylemakers

Ellis,
Jane Allen
Lot 151

0 20'

(App. 80' R/W)

Stone Wall

Sidewalk

(O.H.T.&E.)

Protect Communications Cable During Pipe Installation

Protect Signal Pole

Str.No. 13
Catch Basin J-10
X = 3107196
Y = 14276434

SEC 1

Connect New Fire Hydrant to New Main with 6" DIP and 6" Aux. Valve

Construction Limits

Install Line Stop to Abandon 6" Line

6"x6" Tapping Saddle

Provide Bends and Fittings As Required to Match Existing and Proposed Water Main Elev.

(Water 6")

6" Tapping Gate Valve

Str.No. 14
Catch Basin J-10
X = 3107227
Y = 1427623

(U.G.Comm)

Duke to Remove Light Pole

Protect Trees

Str.No. 17
Catch Basin J-10
X = 3107344
Y = 1427622

NEPL

AC

16.5' R/W Alley

16.5' R/W Alley

Protect Sign Pole/Mast Arm

2" Lighting Conduit

Kirkwood Avenue

8"PVC

763.30

8"x6" Tee w/ Blind Flange

8" Gate Valve

Install 8" DIP Watermain (Under Storm Sewer Crossings)

Line "A"

Protect 6" Gas Main

758.50

Str.No. 12
60" Precast Manhole

Traffic Detection Loop

Replace Detector Loop Wiring

Protect Sanitary Lateral if possible. If not, replace.

Str.No. 15
Catch Basin J-10
X = 3107301
Y = 1427584

Protect 4" Gas Main During Pipe Installation (Typ)

Pole to be Relocated by Duke

2" Lighting Conduit

2x4" PVC Comm. Ducts

Gas 4" Steel

Protect Sanitary Laterals if possible. If not, replace.

Concrete

Grass

Str.No. 11
Catch Basin J-10
X = 3107195
Y = 1427562

Traffic Control Box

Protect Signal Conduit During Construction (Typ)

Protect Signal Pole and Controller

Protect Tree

Mulch

Asphalt

Str.No. 16
72" Precast Manhole

Protect Trees

Construction Limits

2" Lighting Conduit

Install Communications Handhole Over Existing Ductbank

#411
Walnut House
Floral & Gift Co.
Hours: M-Sat 8:30-5:30

Lot 138

Alley

L'atelier, Inc.

MATCHLINE 54+20 "A"

SOIL EROSION CONTROL

SEC 1 - Install sediment protection immediately following completion of inlet/catchbasin construction and maintain until pavement is installed.

SEC 2 - Install sediment protection prior to start of excavation activities and remove when inlet/catchbasin is removed.

Regions
#417

Lot 140

Lot 139

Dunn, Barbara F.

Water/Sewer Services: Locations Of Water And Sewer Services Are Approximate Only. Contractor To Field Verify Locations Of Each And Install All New Services As Shown Here And In The Construction Specifications. Approximate Proposed Locations Of Sewer And Water Service Are Shown As Bold Lines Extending From Mains.

Note:
Existing Utilities Shown On Plans Are Approximated In Accordance With Available Records And Physical Evidence. Other Utilities May Also Be Present. Exact Locations And Elevations Are To Be Determined.

ALL R/W AND TOPO FROM LINE "A"

Storm Sewer Manhole and Sanitary Sewer Manhole location information can be found on Sheet L1.

PAUL N. ELLING
REGISTERED
NO.
890275
STATE OF
INDIANA
PROFESSIONAL ENGINEER

1-22-10

Revision Number	Revision Description	Drawn By	Checked By	Date

Designed By	JAB
Drawn By	JAB
Checked By	TJM
Approved By	PNE
Filename	344TP01.DGN
Project No.	11715
Project Date	1/22/10

CITY OF BLOOMINGTON DEPT. OF PUBLIC WORKS
KIRKWOOD AVENUE STREETSCAPE PHASE III
COLLEGE AVENUE TO ROGERS STREET
BLOOMINGTON, INDIANA

UTILITY PLANS
SOIL EROSION CONTROL

DONOHUE & ASSOCIATES

Sheet No. 4

Drawing No. P1

$FILES $DATES $TIMES

...\Projects\11715\Dwg\344tp01.dgn 1/22/2010 1:45:53 PM

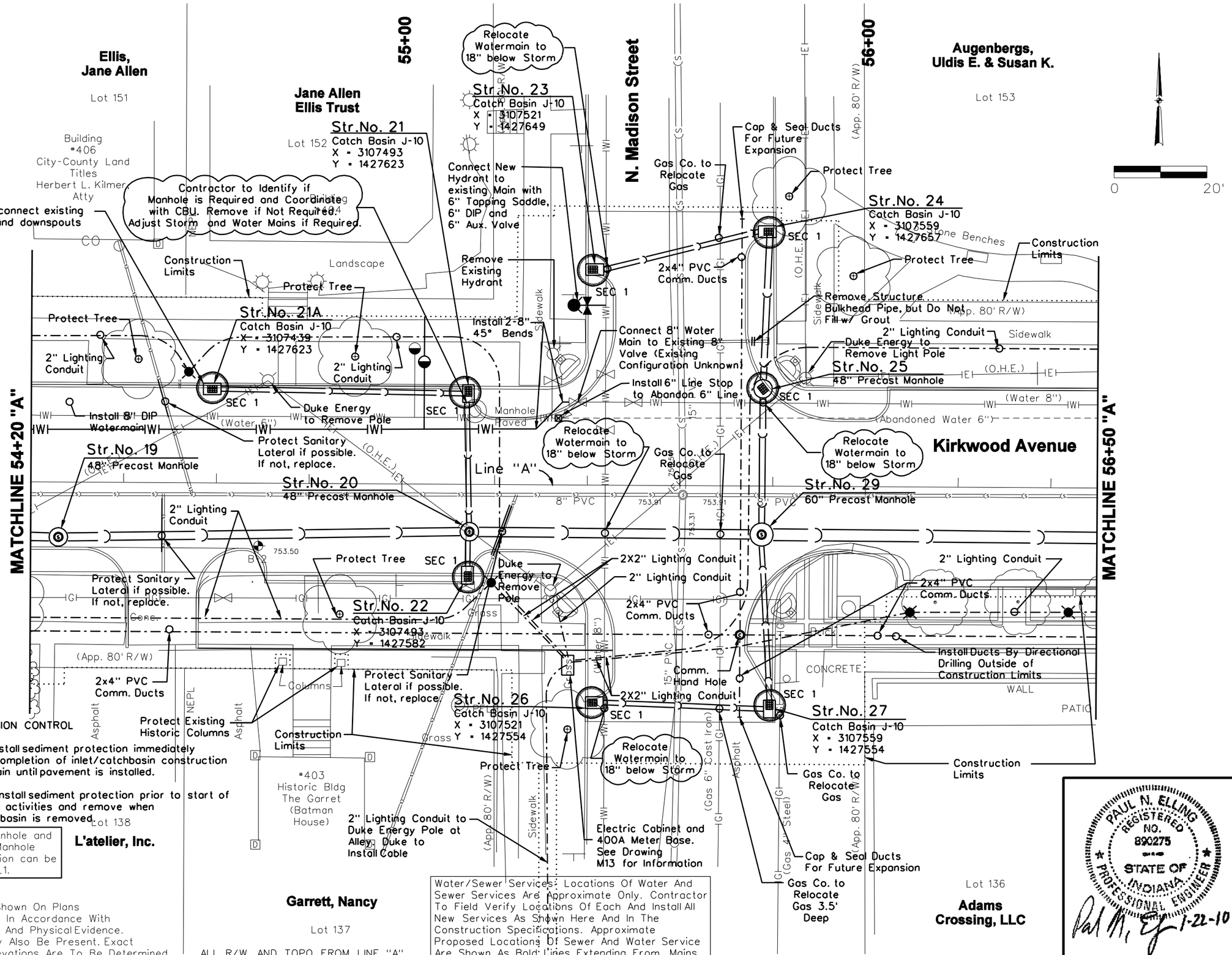

SOIL EROSION CONTROL

SEC 1 - Install sediment protection immediately following completion of inlet/catchbasin construction and maintain until pavement is installed.

SEC 2 - Install sediment protection prior to start of excavation activities and remove when inlet/catchbasin is removed.

Storm Sewer Manhole and Sanitary Sewer Manhole location information can be found on Sheet L1.

Note:
Existing Utilities Shown On Plans Are Approximated In Accordance With Available Records And Physical Evidence. Other Utilities May Also Be Present. Exact Locations And Elevations Are To Be Determined.

ALL R/W AND TOPO FROM LINE "A"

Water/Sewer Services: Locations Of Water And Sewer Services Are Approximate Only. Contractor To Field Verify Locations Of Each And Install All New Services As Shown Here And In The Construction Specifications. Approximate Proposed Locations Of Sewer And Water Service Are Shown As Bold Lines Extending From Mains.

PAUL N. ELLING REGISTERED NO. 890275 STATE OF INDIANA PROFESSIONAL ENGINEER
1-22-10

Revision Number	Revision Description	Drawn By	Checked By	Date

Designed By	JAB
Drawn By	JAB
Checked By	TJM
Approved By	PNE
Filename	344TP02.DGN
Project No.	11715
Project Date	1/22/10

CITY OF BLOOMINGTON DEPT. OF PUBLIC WORKS
KIRKWOOD AVENUE STREETSCAPE PHASE III
COLLEGE AVENUE TO ROGERS STREET
BLOOMINGTON, INDIANA

UTILITY PLANS
SOIL EROSION CONTROL

DONOHUE & ASSOCIATES

Sheet No. 5

Drawing No. P2

$DATE$ $TIME$ $FILE$

...\Projects\11715\Dwg\344tp02.dgn 1/22/2010 1:47:16 PM

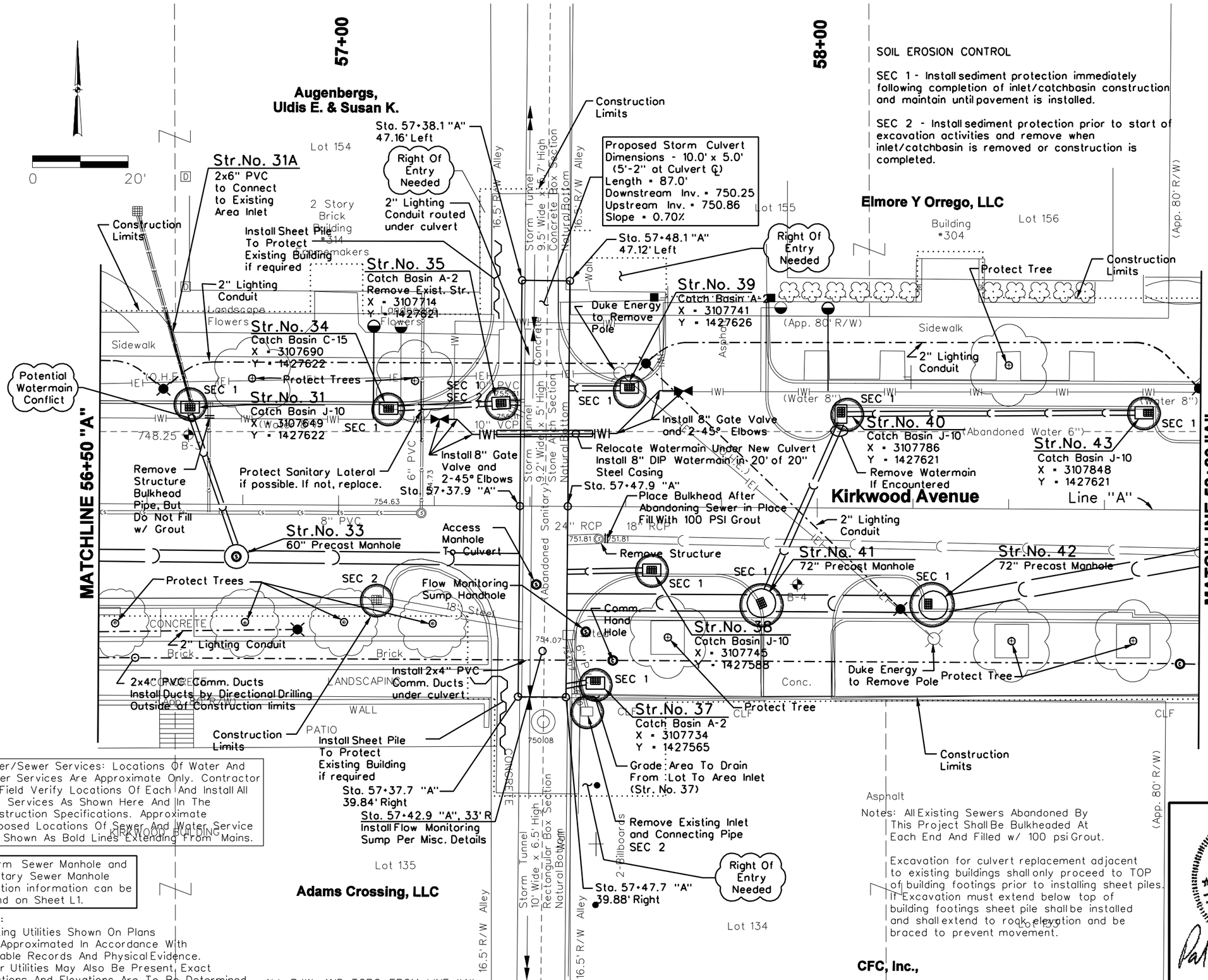

Revision Number	Revision Description	Drawn By	Checked By	Date

Designed By	JAB
Drawn By	JAB
Checked By	TJM
Approved By	PNE
Filename	344TP03.DGN
Project No.	11715
Project Date	1/22/10

CITY OF BLOOMINGTON DEPT. OF PUBLIC WORKS
KIRKWOOD AVENUE STREETSCAPE PHASE III
COLLEGE AVENUE TO ROGERS STREET
BLOOMINGTON, INDIANA

UTILITY PLANS
SOIL EROSION CONTROL

DONOHUE & ASSOCIATES

Sheet No. 6

Drawing No. P3

$FILE$ $DATE$ $TIME$

...\Projects\11715\Dwg\344tp03.dgn 1/22/2010 1:48:19 PM

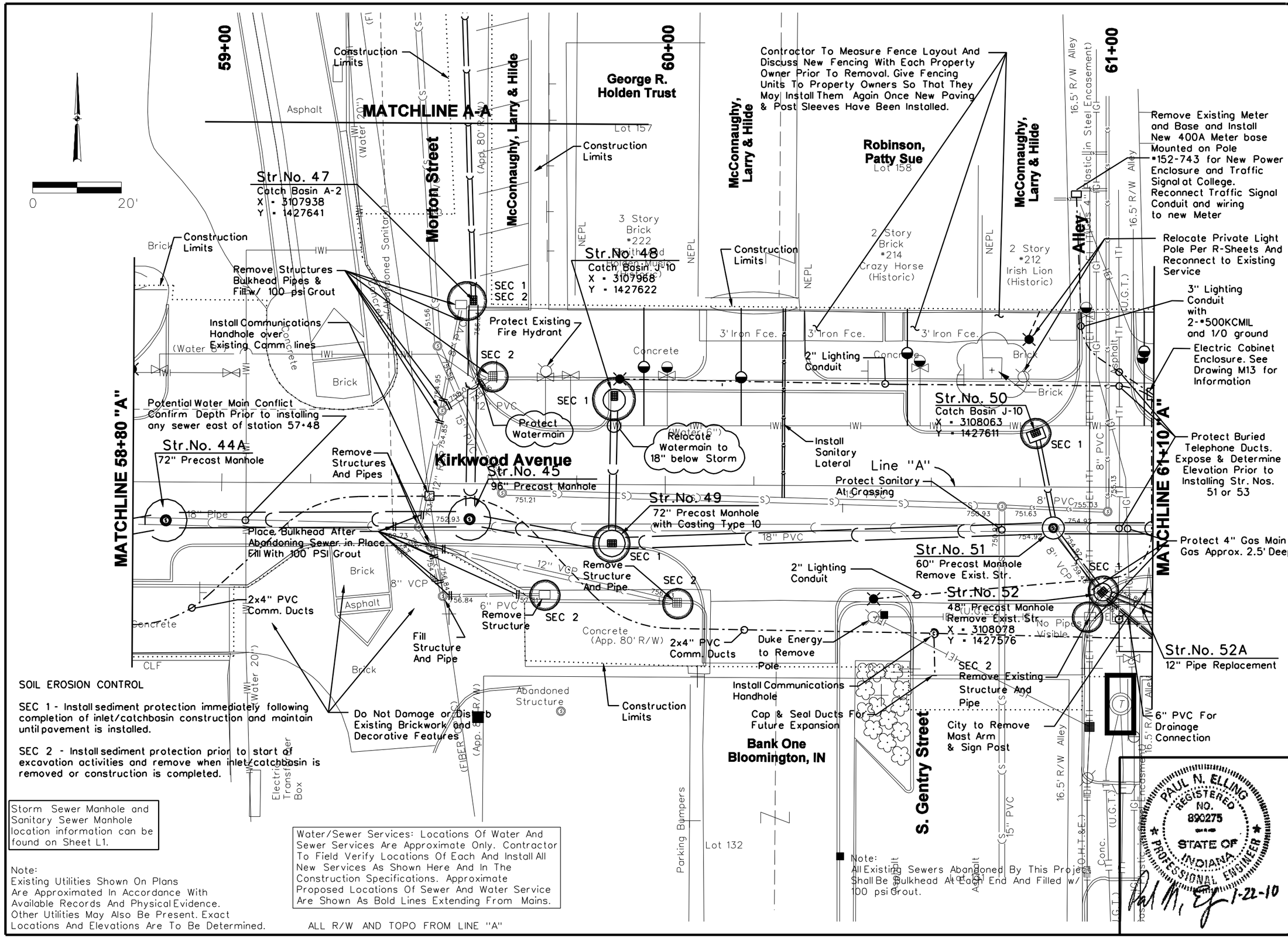

SOIL EROSION CONTROL

SEC 1 - Install sediment protection immediately following completion of inlet/catchbasin construction and maintain until pavement is installed.

SEC 2 - Install sediment protection prior to start of excavation activities and remove when inlet/catchbasin is removed or construction is completed.

Storm Sewer Manhole and Sanitary Sewer Manhole location information can be found on Sheet L1.

Note:
Existing Utilities Shown On Plans Are Approximated In Accordance With Available Records And Physical Evidence. Other Utilities May Also Be Present. Exact Locations And Elevations Are To Be Determined.

Water/Sewer Services: Locations Of Water And Sewer Services Are Approximate Only. Contractor To Field Verify Locations Of Each And Install All New Services As Shown Here And In The Construction Specifications. Approximate Proposed Locations Of Sewer And Water Service Are Shown As Bold Lines Extending From Mains.

ALL R/W AND TOPO FROM LINE "A"

Revision Number	Revision Description	Drawn By	Checked By	Date

Designed By	JAB
Drawn By	JAB
Checked By	TJM
Approved By	PNE
Filename	344TP04.DGN
Project No.	11715
Project Date	1/22/10

CITY OF BLOOMINGTON DEPT. OF PUBLIC WORKS
KIRKWOOD AVENUE STREETSCAPE PHASE III
COLLEGE AVENUE TO ROGERS STREET
BLOOMINGTON, INDIANA

UTILITY PLANS
SOI; EROSION CONTROL

DONOHUE & ASSOCIATES

Sheet No. 7

Drawing No. P4

$TIME$ $DATE$ $FILE$

...\Projects\11715\Dwg\344tp04.dgn 1/22/2010 4:24:02 PM

SOIL EROSION CONTROL

SEC 1 - Install sediment protection immediately following completion of inlet/catchbasin construction and maintain until pavement is installed.

SEC 2 - Install sediment protection prior to start of excavation activities and remove when inlet/catchbasin is removed or construction is completed.

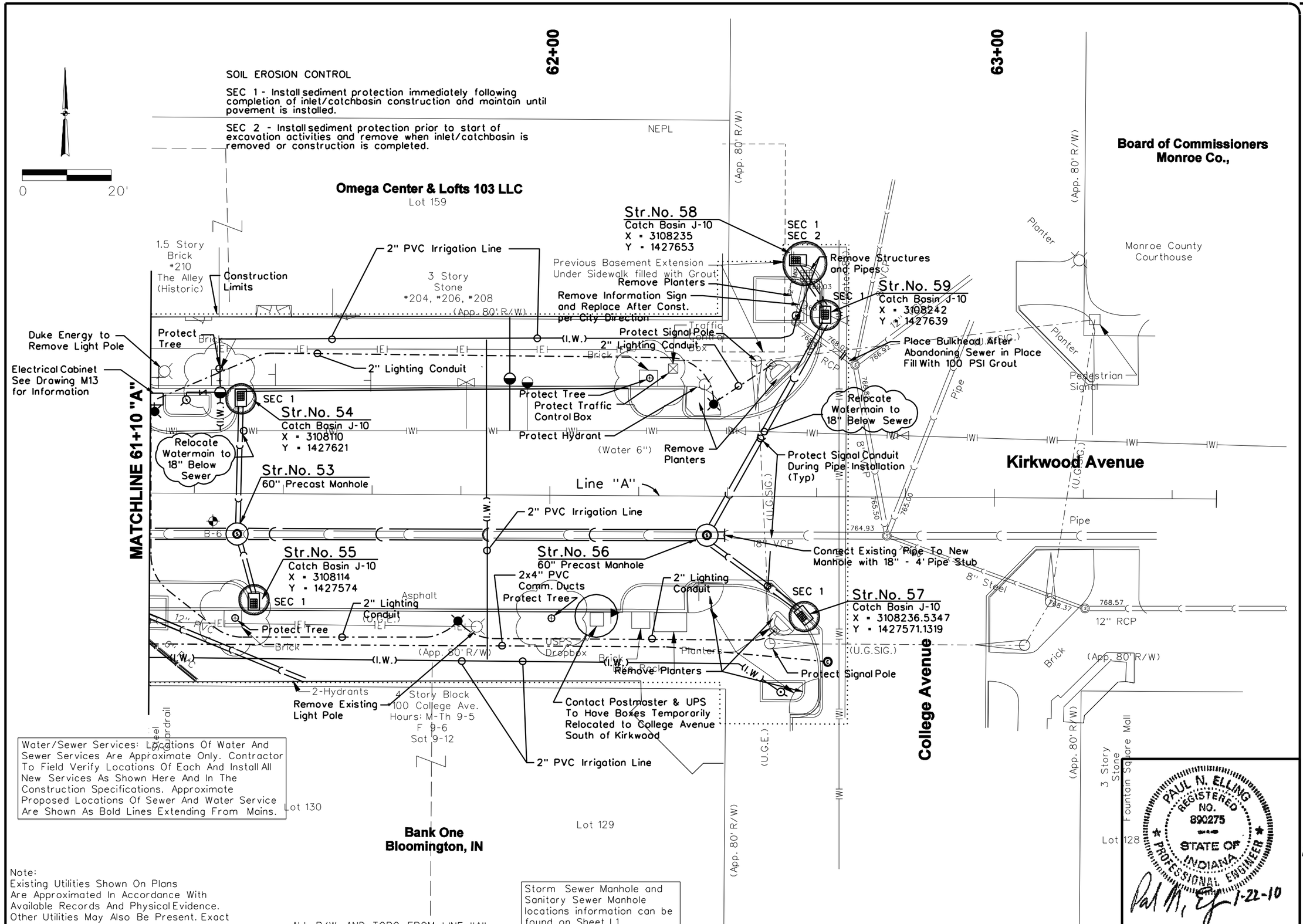

Note:
Existing Utilities Shown On Plans Are Approximated In Accordance With Available Records And Physical Evidence. Other Utilities May Also Be Present. Exact Locations And Elevations Are To Be Determined.

ALL R/W AND TOPO FROM LINE "A"

Revision Number	Revision Description	Drawn By	Checked By	Date

Designed By	JAB
Drawn By	JAB
Checked By	TJM
Approved By	PNE
Filename	344TP05.DGN
Project No.	11715
Project Date	1/22/10

PAUL N. ELLING
REGISTERED
NO.
890275
STATE OF
INDIANA
PROFESSIONAL ENGINEER
1-22-10

CITY OF BLOOMINGTON DEPT. OF PUBLIC WORKS
KIRKWOOD AVENUE STREETSCAPE PHASE III
COLLEGE AVENUE TO ROGERS STREET
BLOOMINGTON, INDIANA

UTILITY PLANS
SOIL EROSION CONTROL

DONOHUE & ASSOCIATES

Sheet No. 8

Drawing No. P5

$DATE$ $TIME$ $FILE$

...\Projects\11715\Dwg\344tp05.dgn 1/22/2010 1:49:54 PM

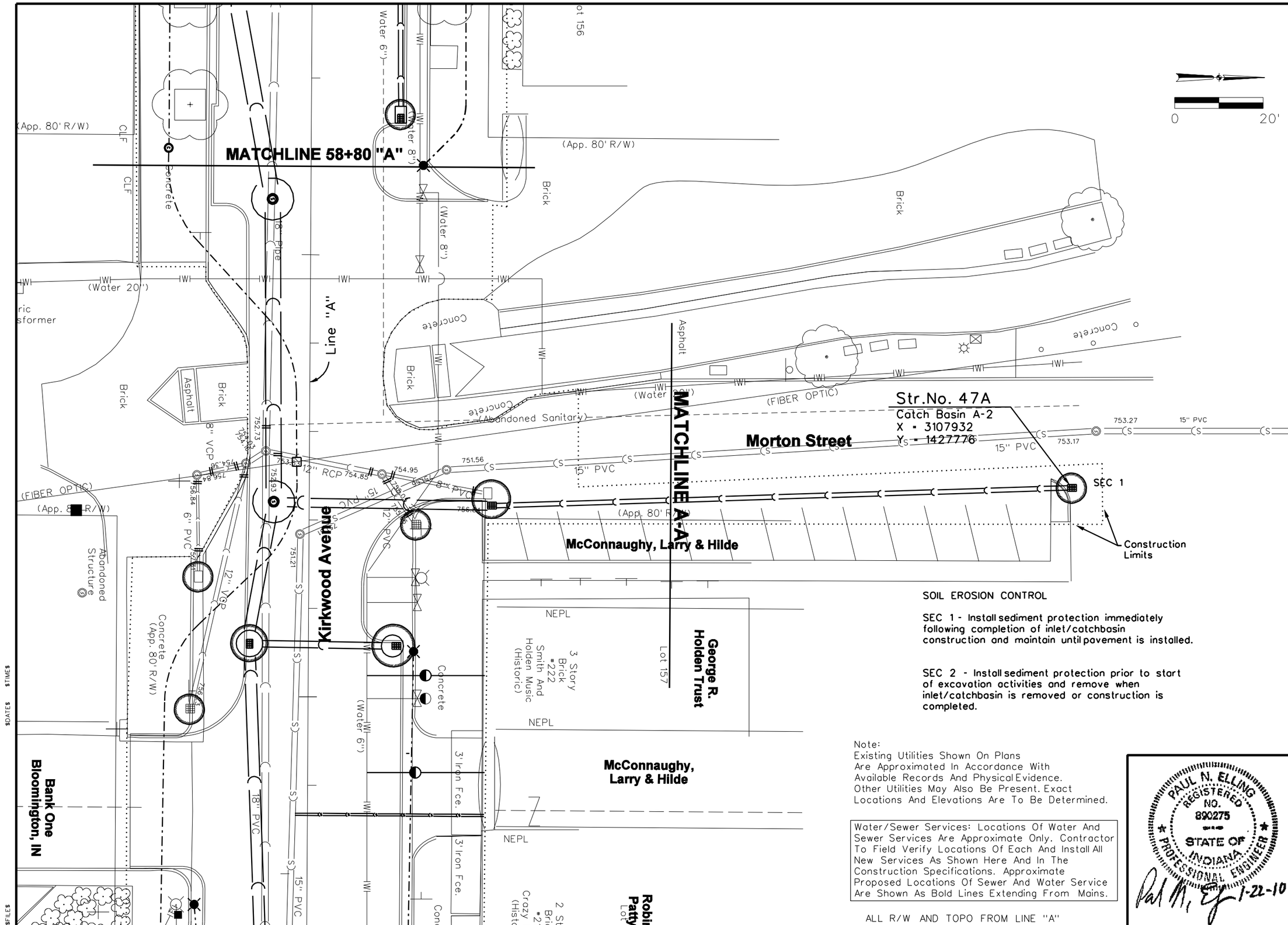

SOIL EROSION CONTROL

SEC 1 - Install sediment protection immediately following completion of inlet/catchbasin construction and maintain until pavement is installed.

SEC 2 - Install sediment protection prior to start of excavation activities and remove when inlet/catchbasin is removed or construction is completed.

Note:
Existing Utilities Shown On Plans Are Approximated In Accordance With Available Records And Physical Evidence. Other Utilities May Also Be Present. Exact Locations And Elevations Are To Be Determined.

Water/Sewer Services: Locations Of Water And Sewer Services Are Approximate Only. Contractor To Field Verify Locations Of Each And Install All New Services As Shown Here And In The Construction Specifications. Approximate Proposed Locations Of Sewer And Water Service Are Shown As Bold Lines Extending From Mains.

ALL R/W AND TOPO FROM LINE "A"

PAUL N. ELLING
REGISTERED
NO. 890275
STATE OF INDIANA
PROFESSIONAL ENGINEER
1-22-10

Revision Number	Revision Description	Drawn By	Checked By	Date

Designed By	JAB
Drawn By	JAB
Checked By	TJM
Approved By	PNE
Filename	344TP06.DGN
Project No.	11715
Project Date	1/22/10

CITY OF BLOOMINGTON DEPT. OF PUBLIC WORKS
KIRKWOOD AVENUE STREETSCAPE PHASE III
COLLEGE AVENUE TO ROGERS STREET
BLOOMINGTON, INDIANA

UTILITY PLANS
SOIL EROSION CONTROL

DONOHUE & ASSOCIATES

Sheet No. 9

Drawing No. P6

$DATE$ $TIME$ $FILE$

...\Projects\11715\Dwg\344tp06.dgn 1/22/2010 1:51:14 PM

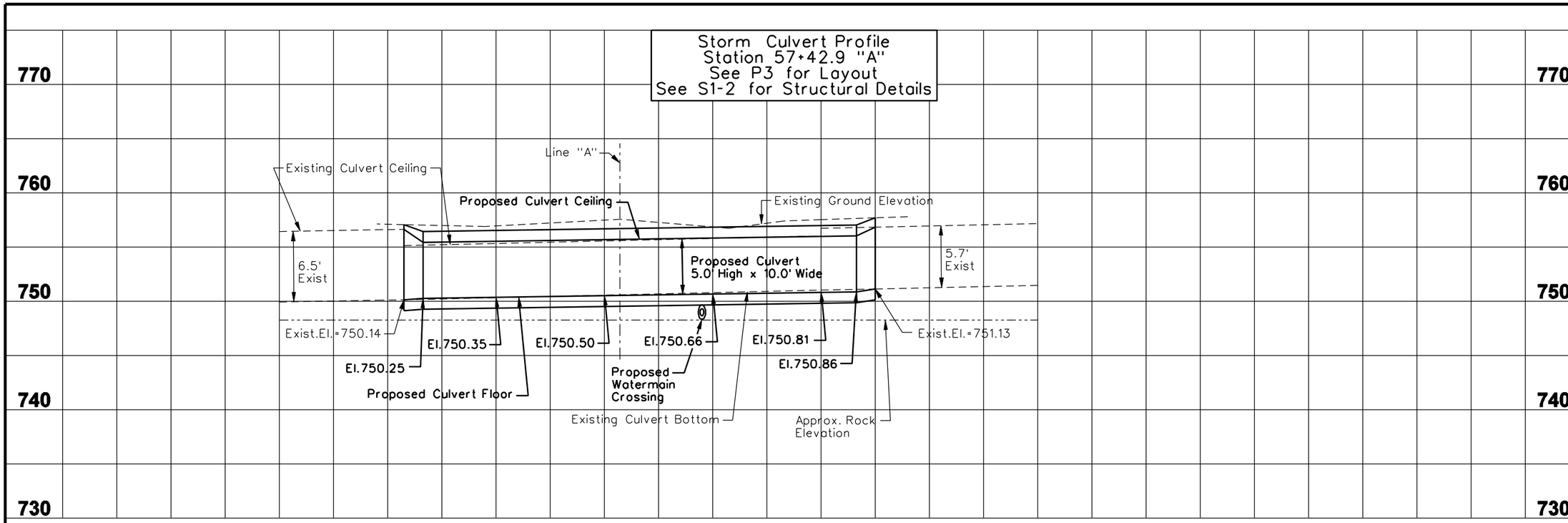

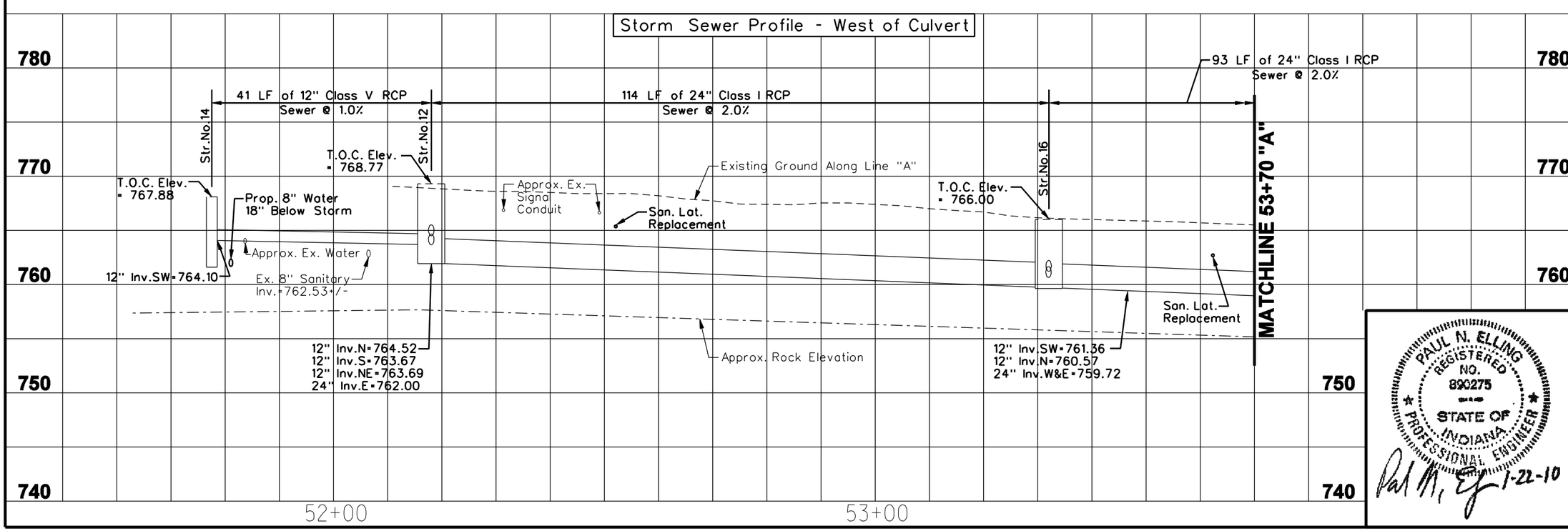

Revision Number	Revision Description	Drawn By	Checked By	Date

Designed By	JAB
Drawn By	JAB
Checked By	PNE
Approved By	PNE
Filename	344TPRF3.DGN
Project No.	11715
Project Date	1/22/10

CITY OF BLOOMINGTON DEPT. OF PUBLIC WORKS
KIRKWOOD AVENUE STREETSCAPE PHASE III
COLLEGE AVENUE TO ROGERS STREET
BLOOMINGTON, INDIANA

PROPOSED CULVERT PROFILE
PROPOSED STORM TRUNKLINE PROFILES

PAUL N. ELLING
REGISTERED NO. 890275
STATE OF INDIANA
PROFESSIONAL ENGINEER
1-22-10

DONOHUE & ASSOCIATES

Sheet No. 10

Drawing No. P7

$TIME$
$DATE$
$FILE$

...\11715\Dwg\344tprf3.dgn 1/22/2010 2:39:29 PM

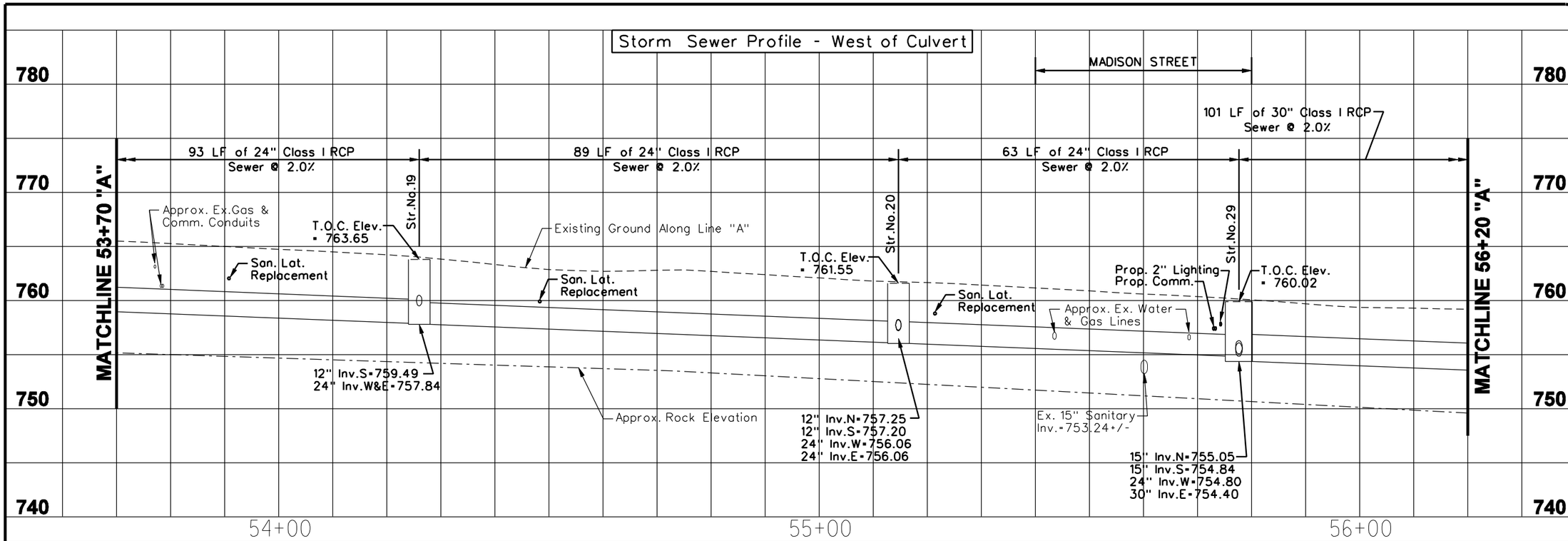

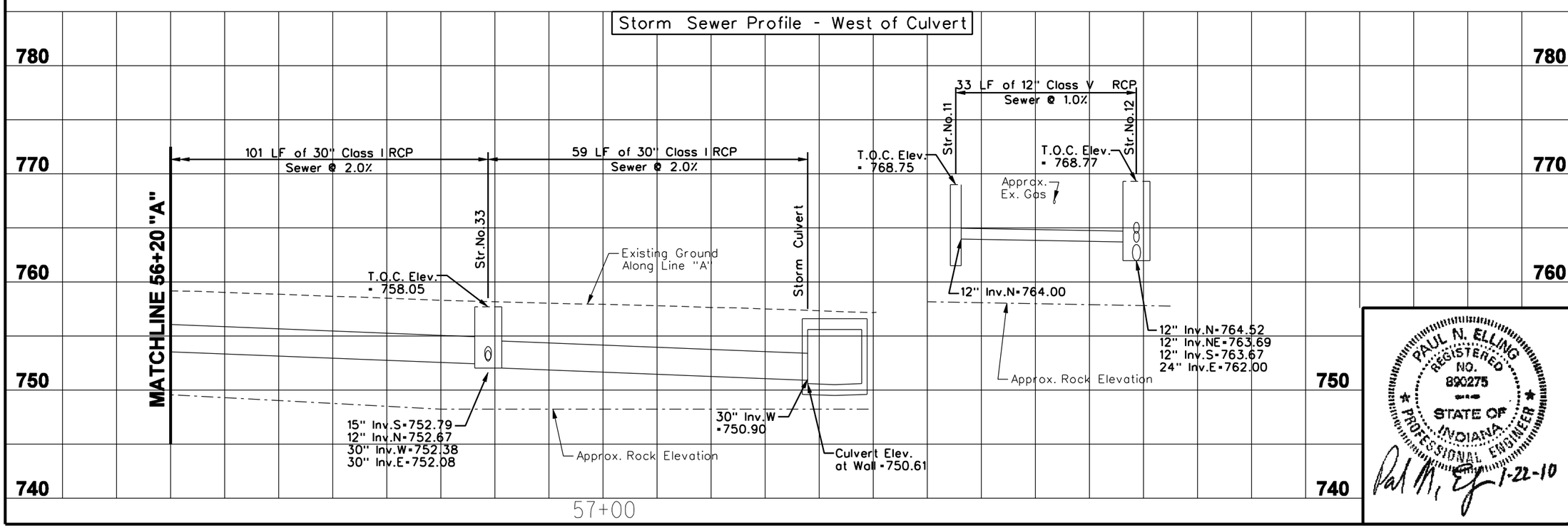

Revision Number	Revision Description	Drawn By	Checked By	Date

Designed By	JAB
Drawn By	JAB
Checked By	PNE
Approved By	PNE
Filename	344TPRF4.DGN
Project No.	11715
Project Date	1/22/10

CITY OF BLOOMINGTON DEPT. OF PUBLIC WORKS
KIRKWOOD AVENUE STREETSCAPE PHASE III
COLLEGE AVENUE TO ROGERS STREET
BLOOMINGTON, INDIANA

PROPOSED STORM TRUNKLINE PROFILES

PAUL N. ELLING
REGISTERED
NO.
890275
STATE OF
INDIANA
PROFESSIONAL ENGINEER

1-22-10

DONOHUE & ASSOCIATES

Sheet No. 11

Drawing No. P8

$TIMES
$DATES
$FILES

...\11715\Dwg\344tprf4.dgn 1/22/2010 2:40:26 PM

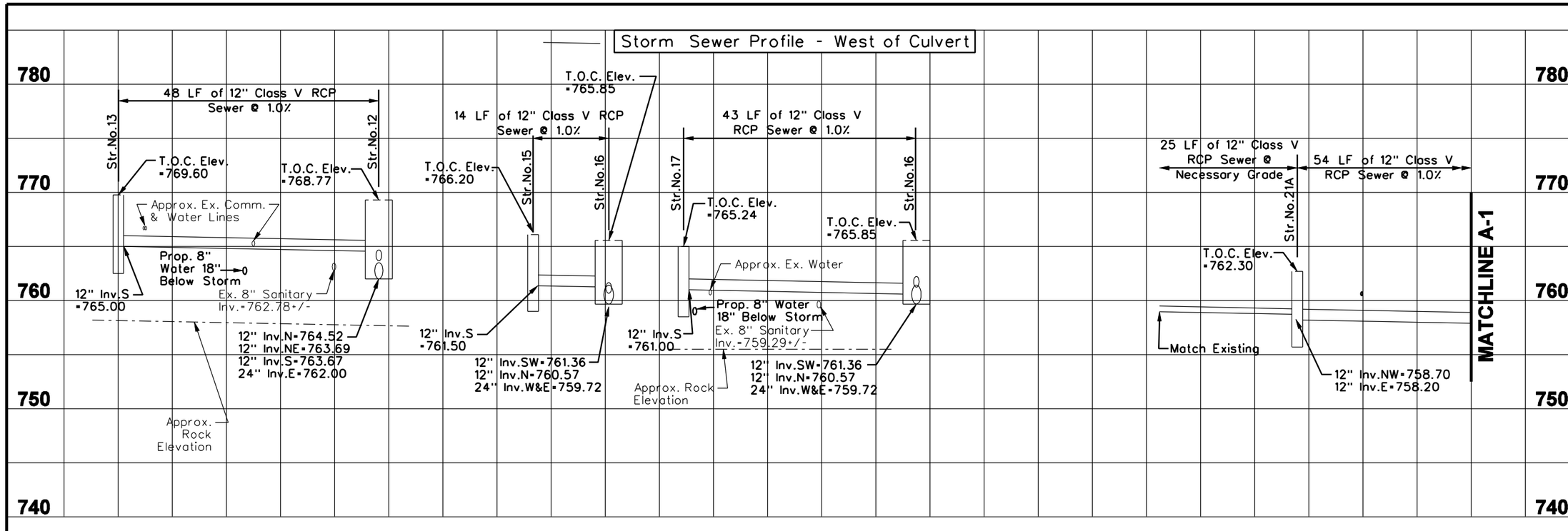

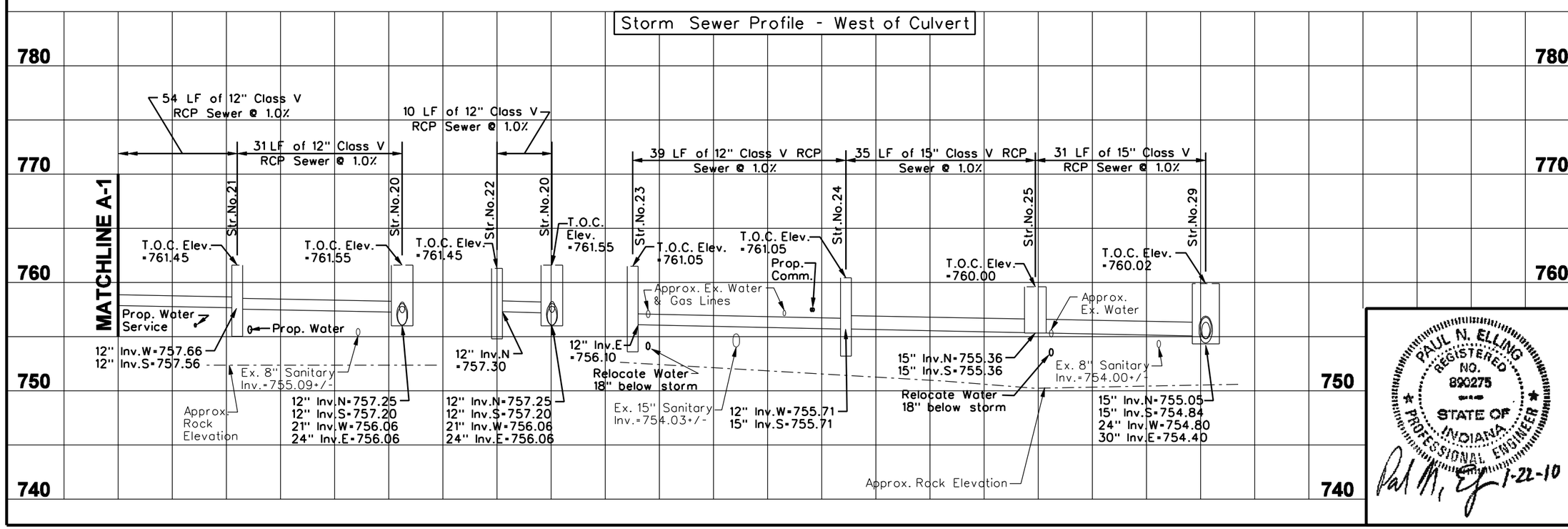

Revision Number	Revision Description	Drawn By	Checked By	Date

Designed By	JAB
Drawn By	JAB
Checked By	PNE
Approved By	PNE
Filename	344TPRF5.DGN
Project No.	11715
Project Date	1/22/10

CITY OF BLOOMINGTON DEPT. OF PUBLIC WORKS
KIRKWOOD AVENUE STREETSCAPE PHASE III
COLLEGE AVENUE TO ROGERS STREET
BLOOMINGTON, INDIANA

PROPOSED STORM TRUNKLINE PROFILES

PAUL N. ELLING REGISTERED NO. 890275 STATE OF INDIANA PROFESSIONAL ENGINEER
1-22-10

DONOHUE & ASSOCIATES

Sheet No. 12

Drawing No. P9

$TIME$ $DATE$ $FILE$

...\11715\Dwg\344tprf5.dgn 1/22/2010 2:41:25 PM

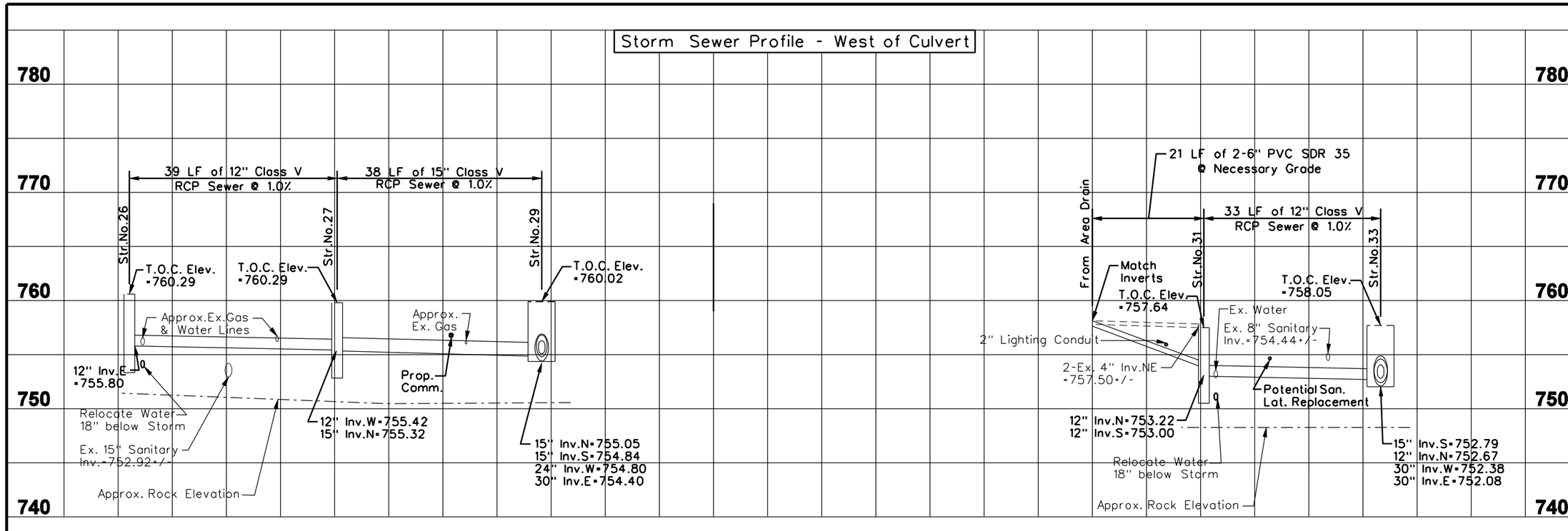

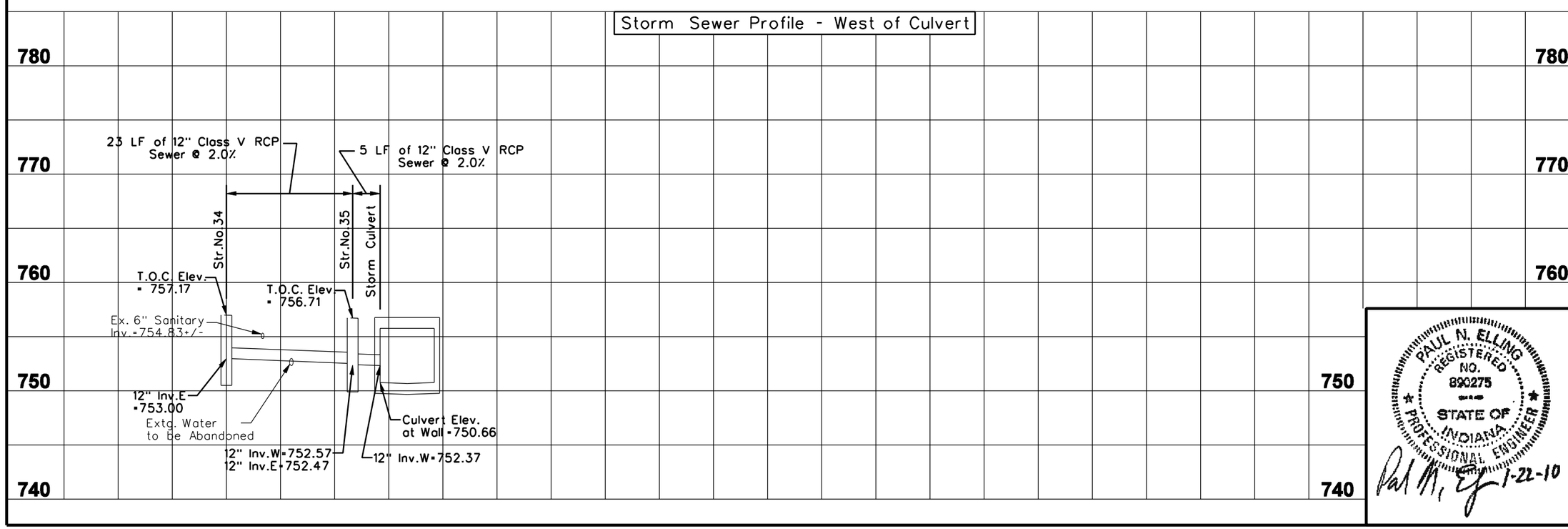

Revision Number	Revision Description	Drawn By	Checked By	Date

Designed By	JAB
Drawn By	JAB
Checked By	PNE
Approved By	PNE
Filename	344TPRF6.DGN
Project No.	11715
Project Date	1/22/10

CITY OF BLOOMINGTON DEPT. OF PUBLIC WORKS
KIRKWOOD AVENUE STREETSCAPE PHASE III
COLLEGE AVENUE TO ROGERS STREET
BLOOMINGTON, INDIANA

PROPOSED STORM TRUNKLINE PROFILES

PAUL N. ELLING REGISTERED NO. 890275 STATE OF INDIANA PROFESSIONAL ENGINEER

1-22-10

DONOHUE & ASSOCIATES

Sheet No. 13

Drawing No. P10

$TIME$ $DATE$ $FILE$

...\11715\Dwg\344tprf6.dgn 1/22/2010 2:42:28 PM

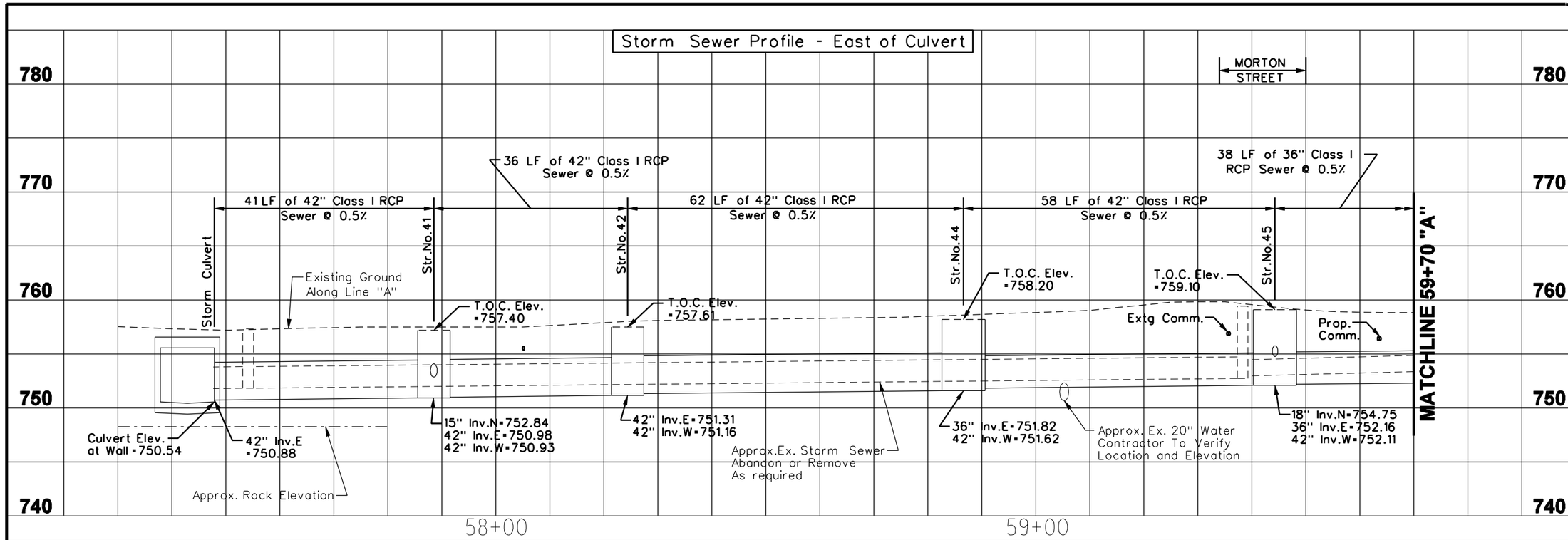

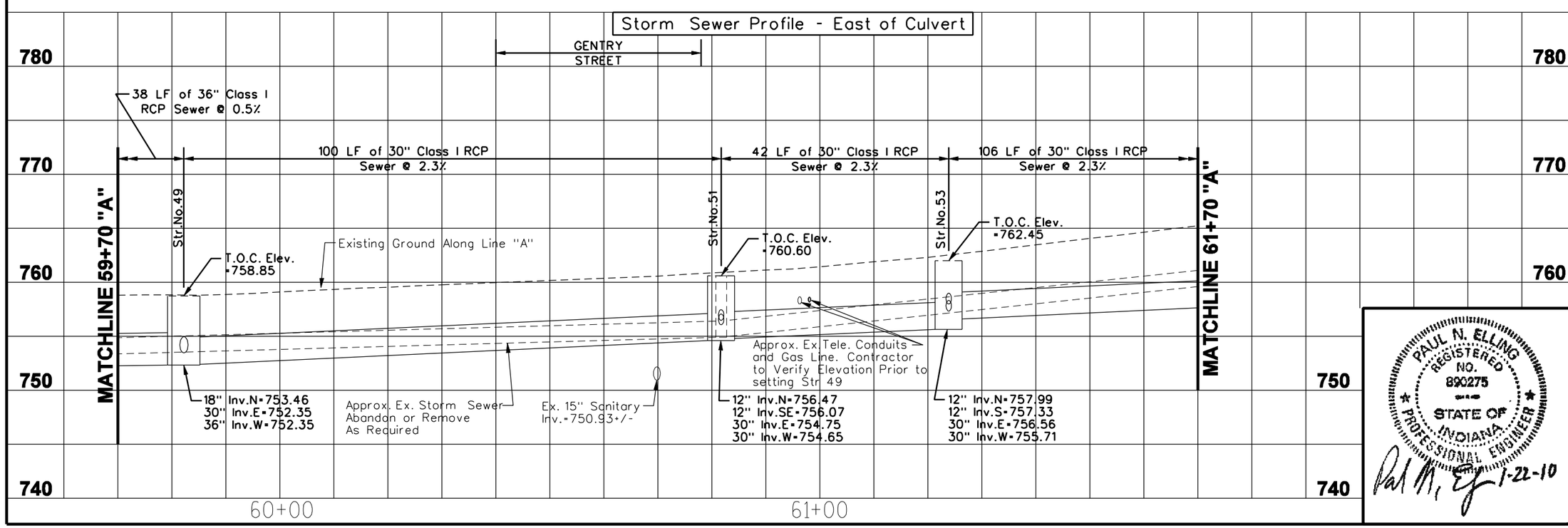

Revision Number	Revision Description	Drawn By	Checked By	Date

Designed By	JAB
Drawn By	JAB
Checked By	PNE
Approved By	PNE
Filename	344TPRF7.DGN
Project No.	11715
Project Date	1/22/10

CITY OF BLOOMINGTON DEPT. OF PUBLIC WORKS
KIRKWOOD AVENUE STREETSCAPE PHASE III
COLLEGE AVENUE TO ROGERS STREET
BLOOMINGTON, INDIANA

PROPOSED STORM TRUNKLINE PROFILES

PAUL N. ELLING REGISTERED NO. 890275 STATE OF INDIANA PROFESSIONAL ENGINEER
1-22-10

DONOHUE & ASSOCIATES

Sheet No. 14

Drawing No. P11

$TIMES $DATES $FILES

...\11715\Dwg\344tprf7.dgn 1/22/2010 2:43:48 PM

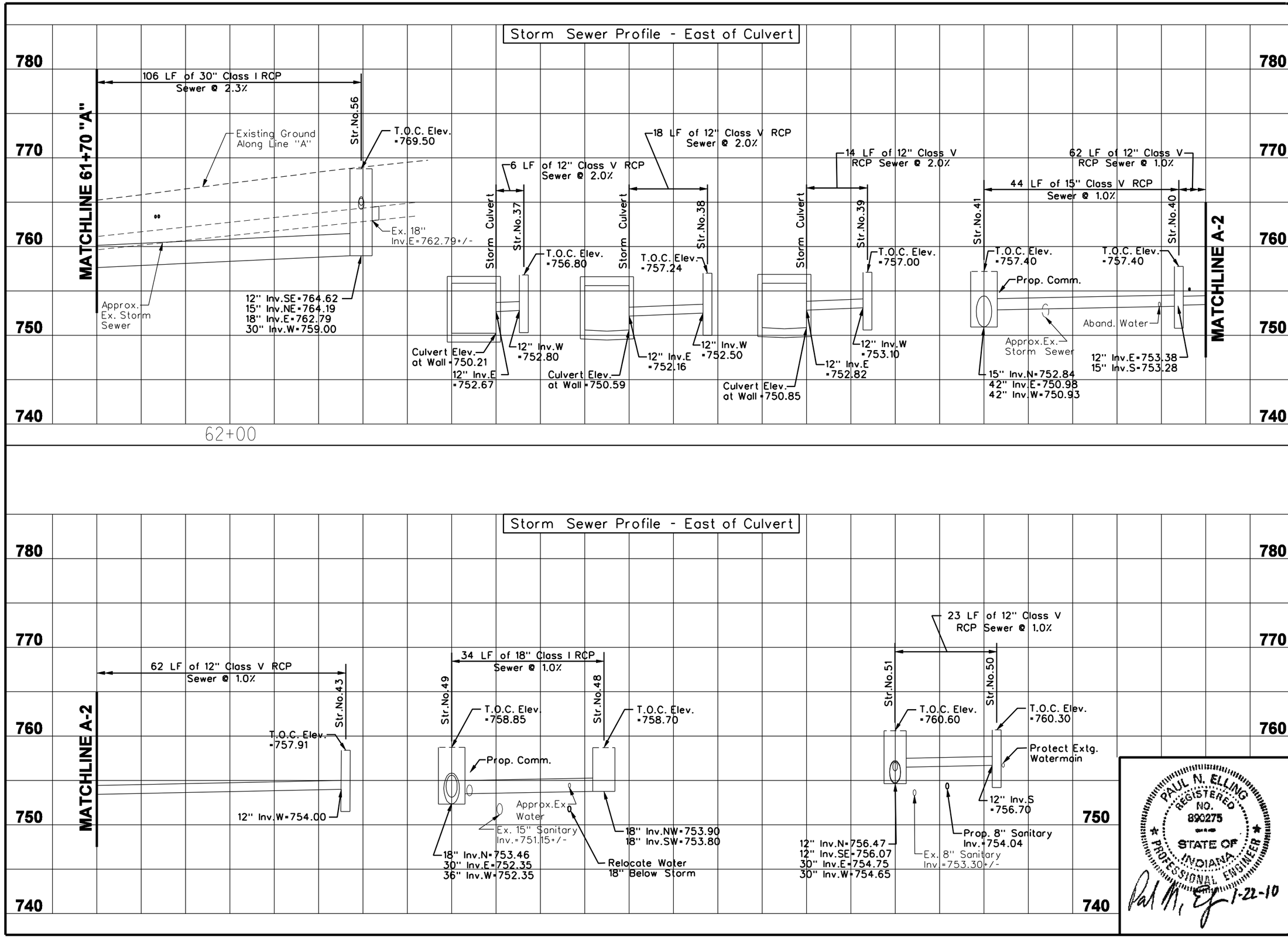

Revision Number	Revision Description	Drawn By	Checked By	Date

Designed By	JAB
Drawn By	JAB
Checked By	PNE
Approved By	PNE
Filename	344TPRF8.DGN
Project No.	11715
Project Date	1/22/10

CITY OF BLOOMINGTON DEPT. OF PUBLIC WORKS
KIRKWOOD AVENUE STREETSCAPE PHASE III
COLLEGE AVENUE TO ROGERS STREET
BLOOMINGTON, INDIANA

PROPOSED STORM TRUNKLINE PROFILES

PAUL N. ELLING
REGISTERED
NO.
890275
STATE OF
INDIANA
PROFESSIONAL ENGINEER

1-22-10

DONOHUE & ASSOCIATES

Sheet No. 15

Drawing No. P12

$TIME$ $DATE$ $FILE$

...\11715\Dwg\344tprf8.dgn 1/22/2010 2:44:41 PM

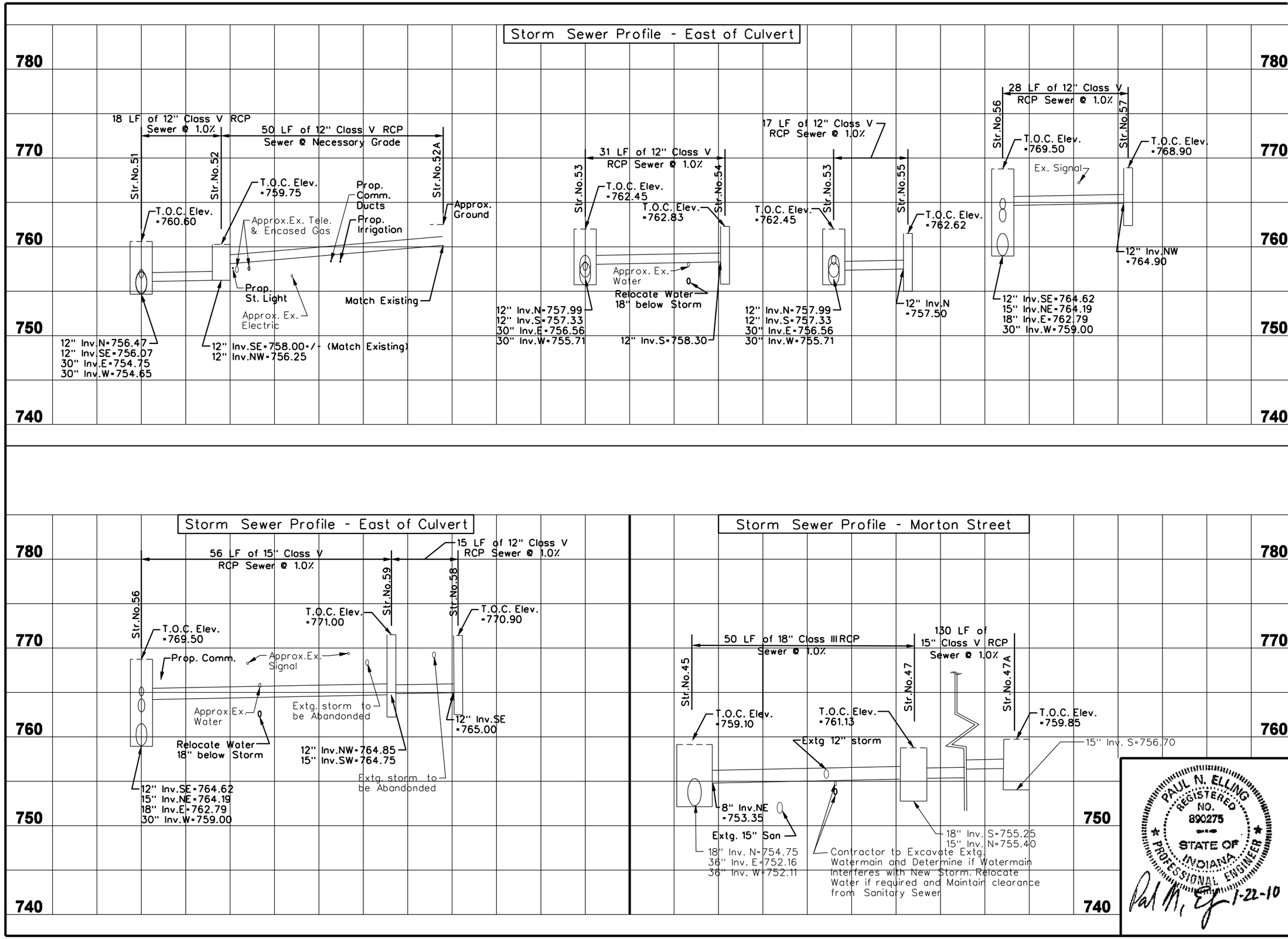

Revision Number	Revision Description	Drawn By	Checked By	Date

Designed By	JAB
Drawn By	JAB
Checked By	PNE
Approved By	PNE
Filename	344TPRF9.DGN
Project No.	11715
Project Date	1/22/10

CITY OF BLOOMINGTON DEPT. OF PUBLIC WORKS
KIRKWOOD AVENUE STREETSCAPE PHASE III
COLLEGE AVENUE TO ROGERS STREET
BLOOMINGTON, INDIANA

PROPOSED STORM TRUNKLINE PROFILES
PROPOSED SANITARY PROFILE

DONOHUE & ASSOCIATES

Sheet No. 16

Drawing No. P13

$TIME$
$DATE$
$FILE$

...\11715\Dwg\344tprf9.dgn 1/22/2010 3:19:34 PM

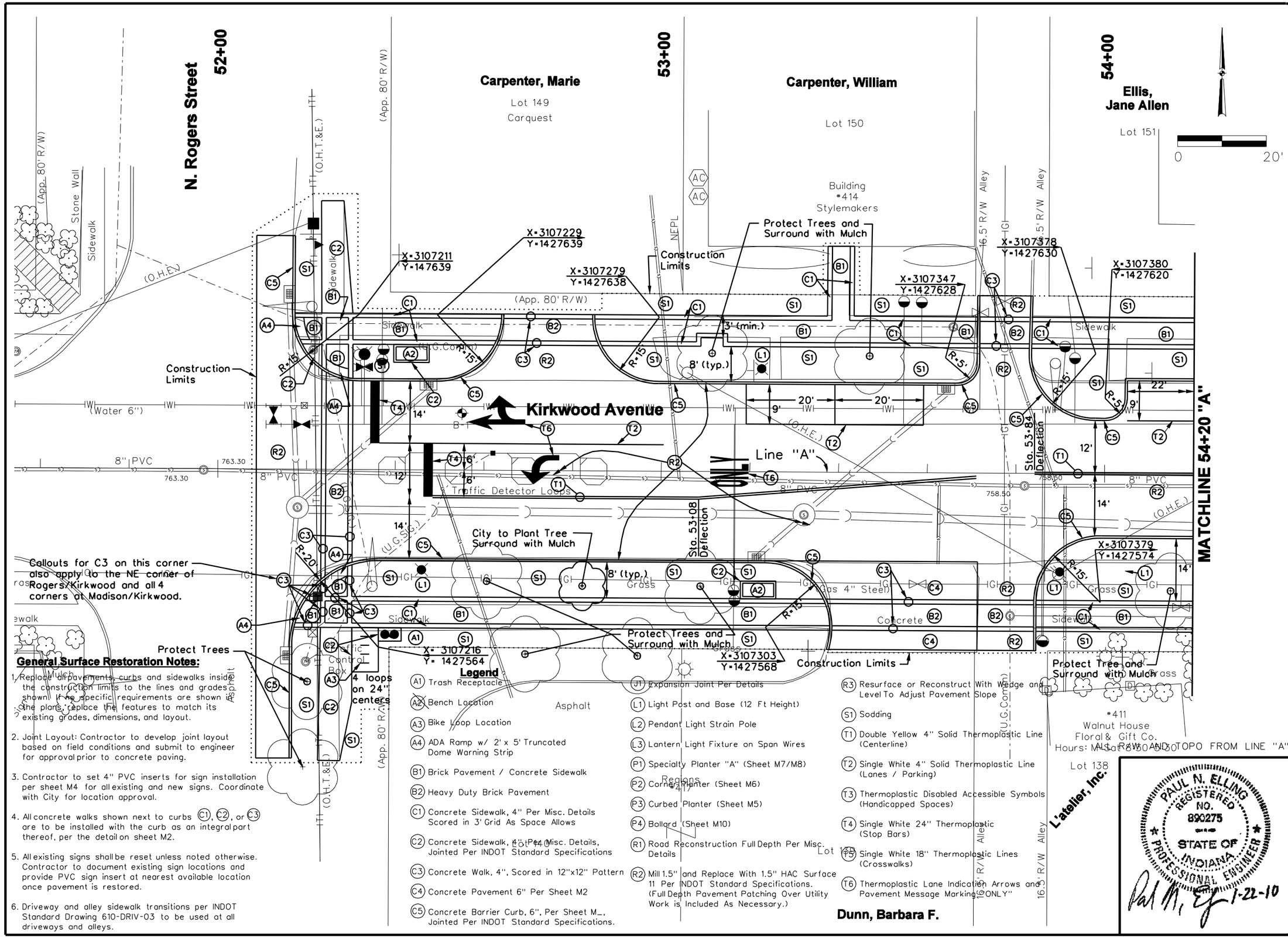

General Surface Restoration Notes:

1. Replace all pavements, curbs and sidewalks inside the construction limits to the lines and grades shown. If no specific requirements are shown on the plans, replace the features to match its existing grades, dimensions, and layout.
2. Joint Layout: Contractor to develop joint layout based on field conditions and submit to engineer for approval prior to concrete paving.
3. Contractor to set 4" PVC inserts for sign installation per sheet M4 for all existing and new signs. Coordinate with City for location approval.
4. All concrete walks shown next to curbs (C1), (C2), or (C3) are to be installed with the curb as an integral part thereof, per the detail on sheet M2.
5. All existing signs shall be reset unless noted otherwise. Contractor to document existing sign locations and provide PVC sign insert at nearest available location once pavement is restored.
6. Driveway and alley sidewalk transitions per INDOT Standard Drawing 610-DRIV-03 to be used at all driveways and alleys.

Legend

- (A1) Trash Receptacle
- (A2) Bench Location
- (A3) Bike Loop Location
- (A4) ADA Ramp w/ 2' x 5' Truncated Dome Warning Strip
- (B1) Brick Pavement / Concrete Sidewalk
- (B2) Heavy Duty Brick Pavement
- (C1) Concrete Sidewalk, 4" Per Misc. Details Scored in 3' Grid As Space Allows
- (C2) Concrete Sidewalk, 4" Per Misc. Details, Jointed Per INDOT Standard Specifications
- (C3) Concrete Walk, 4", Scored in 12"x12" Pattern
- (C4) Concrete Pavement 6" Per Sheet M2
- (C5) Concrete Barrier Curb, 6", Per Sheet M_, Jointed Per INDOT Standard Specifications.
- (J1) Expansion Joint Per Details
- (L1) Light Post and Base (12 Ft Height)
- (L2) Pendant Light Strain Pole
- (L3) Lantern Light Fixture on Span Wires
- (P1) Specialty Planter "A" (Sheet M7/M8)
- (P2) Corner Planter (Sheet M6)
- (P3) Curbed Planter (Sheet M5)
- (P4) Bollard (Sheet M10)
- (R1) Road Reconstruction Full Depth Per Misc. Details
- (R2) Mill 1.5" and Replace With 1.5" HAC Surface 11 Per INDOT Standard Specifications. (Full Depth Pavement Patching Over Utility Work is Included As Necessary.)
- (R3) Resurface or Reconstruct With Wedge and Level To Adjust Pavement Slope
- (S1) Sodding
- (T1) Double Yellow 4" Solid Thermoplastic Line (Centerline)
- (T2) Single White 4" Solid Thermoplastic Line (Lanes / Parking)
- (T3) Thermoplastic Disabled Accessible Symbols (Handicapped Spaces)
- (T4) Single White 24" Thermoplastic (Stop Bars)
- (T5) Single White 18" Thermoplastic Lines (Crosswalks)
- (T6) Thermoplastic Lane Indication Arrows and Pavement Message Marking "ONLY"

PAUL N. ELLING
REGISTERED NO. 890275
STATE OF INDIANA
PROFESSIONAL ENGINEER
1-22-10

Revision Number	Revision Description	Drawn By	Checked By	Date

Designed By	JAB
Drawn By	JAB
Checked By	TJM
Approved By	PNE
Filename	344TR01.DGN
Project No.	11715
Project Date	1/22/10

CITY OF BLOOMINGTON DEPT. OF PUBLIC WORKS
KIRKWOOD AVENUE STREETSCAPE PHASE III
COLLEGE AVENUE TO ROGERS STREET
BLOOMINGTON, INDIANA

SURFACE RESTORATION PLAN

DONOHUE & ASSOCIATES

Sheet No. 17

Drawing No. R1

$TIME$ $DATE$ $FILE$

...\Projects\11715\Dwg\344tr01.dgn 1/22/2010 3:20:48 PM

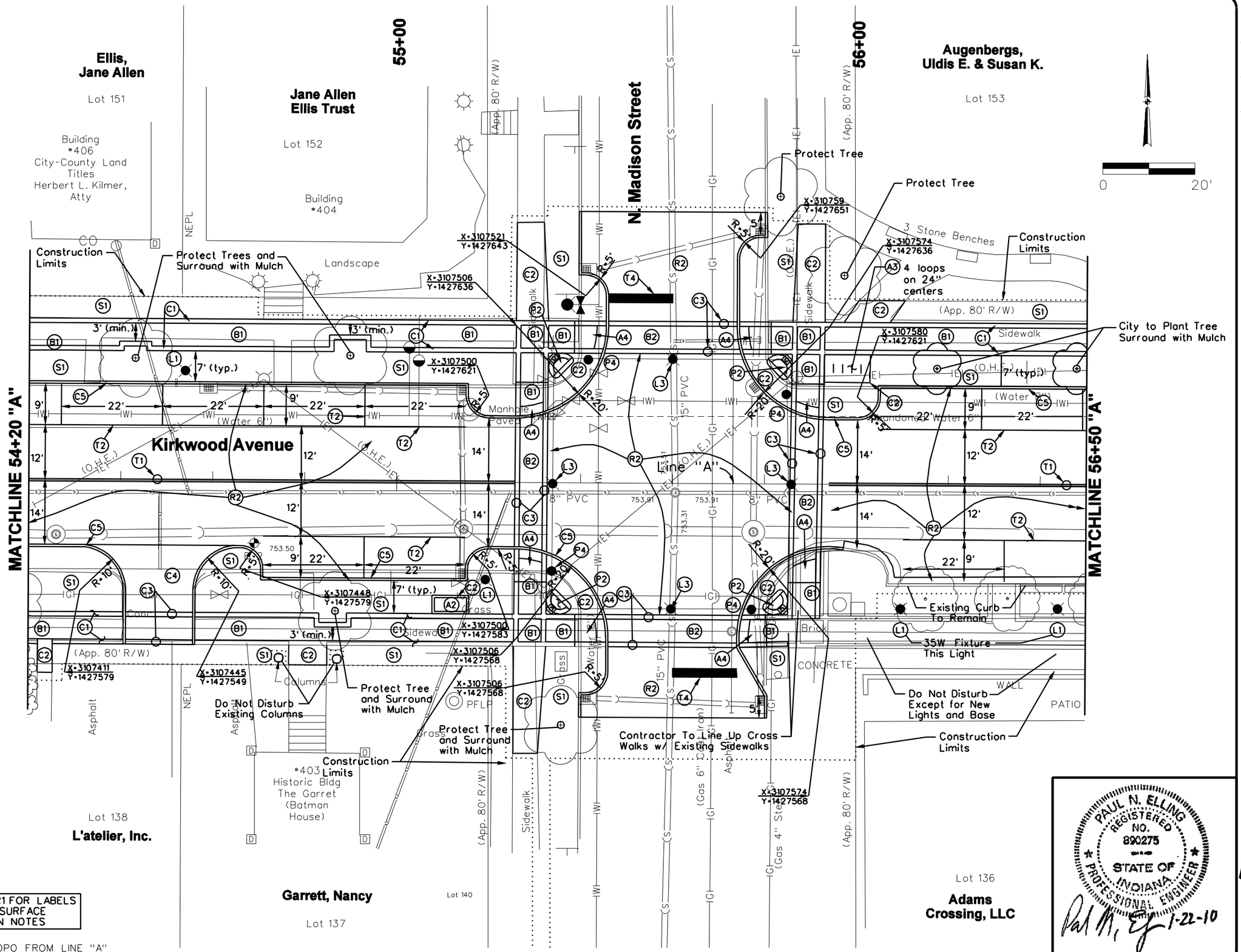

Revision Number	Revision Description	Drawn By	Checked By	Date

Designed By	JAB
Drawn By	JAB
Checked By	TJM
Approved By	PNE
Filename	344TR02.DGN
Project No.	11715
Project Date	1/22/10

CITY OF BLOOMINGTON DEPT. OF PUBLIC WORKS
KIRKWOOD AVENUE STREETSCAPE PHASE III
COLLEGE AVENUE TO ROGERS STREET
BLOOMINGTON, INDIANA

SURFACE RESTORATION PLAN

PAUL N. ELLING REGISTERED NO. 890275 STATE OF INDIANA PROFESSIONAL ENGINEER
1-22-10

DONOHUE & ASSOCIATES

Sheet No. 18

Drawing No. R2

$FILE$ $DATE$ $TIME$

...\Projects\11715\Dwg\344tr02.dgn 1/22/2010 3:25:38 PM

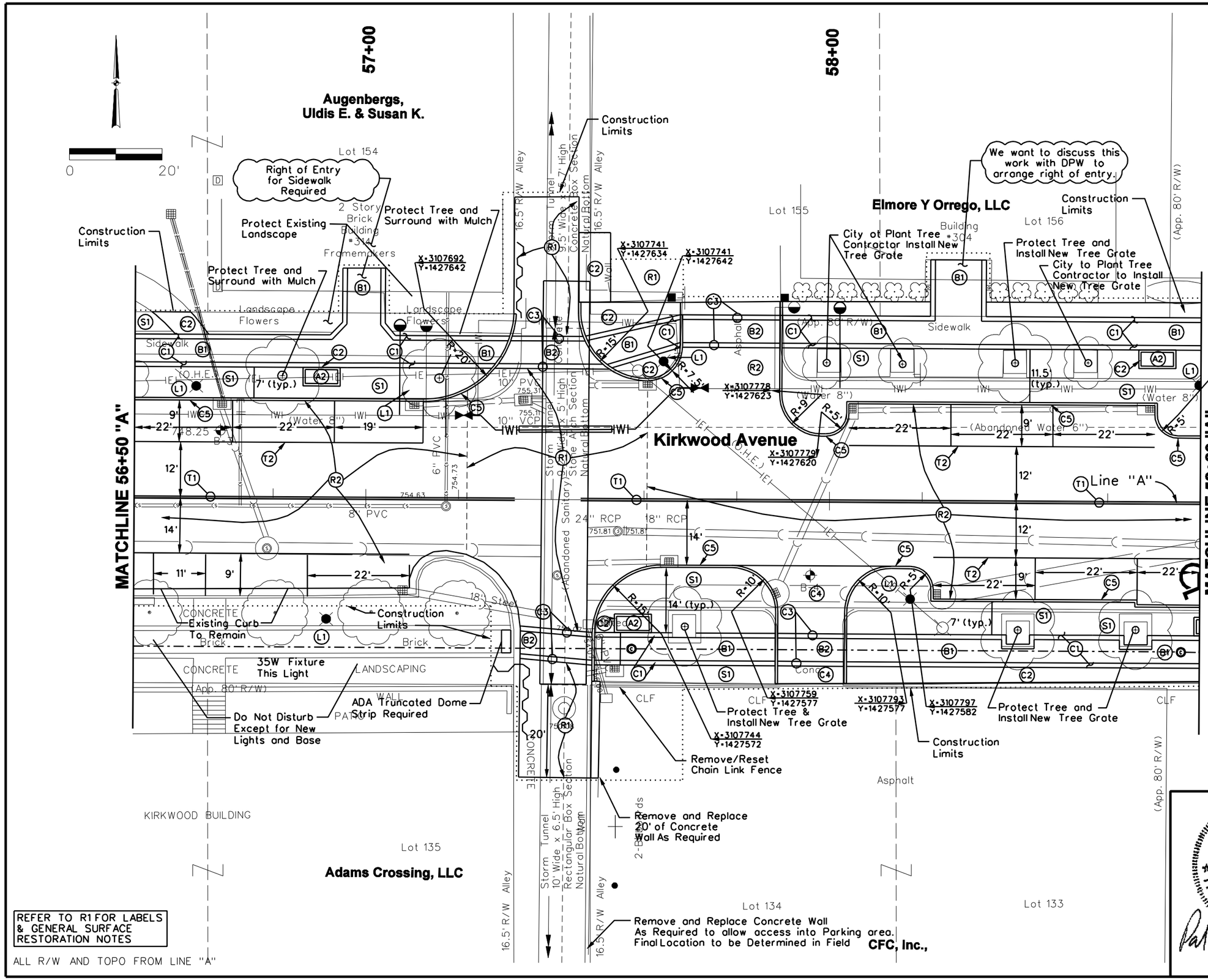

Revision Number	Revision Description	Drawn By	Checked By	Date

Designed By	JAB
Drawn By	JAB
Checked By	TJM
Approved By	PNE
Filename	344TR03.DGN
Project No.	11715
Project Date	1/22/10

CITY OF BLOOMINGTON DEPT. OF PUBLIC WORKS
KIRKWOOD AVENUE STREETSCAPE PHASE III
COLLEGE AVENUE TO ROGERS STREET
BLOOMINGTON, INDIANA

SURFACE RESTORATION PLAN

DONOHUE & ASSOCIATES

Sheet No. 19

Drawing No. R3

$FILE$ $DATE$ $TIME$

...\Projects\11715\Dwg\344tr03.dgn 1/22/2010 3:27:16 PM

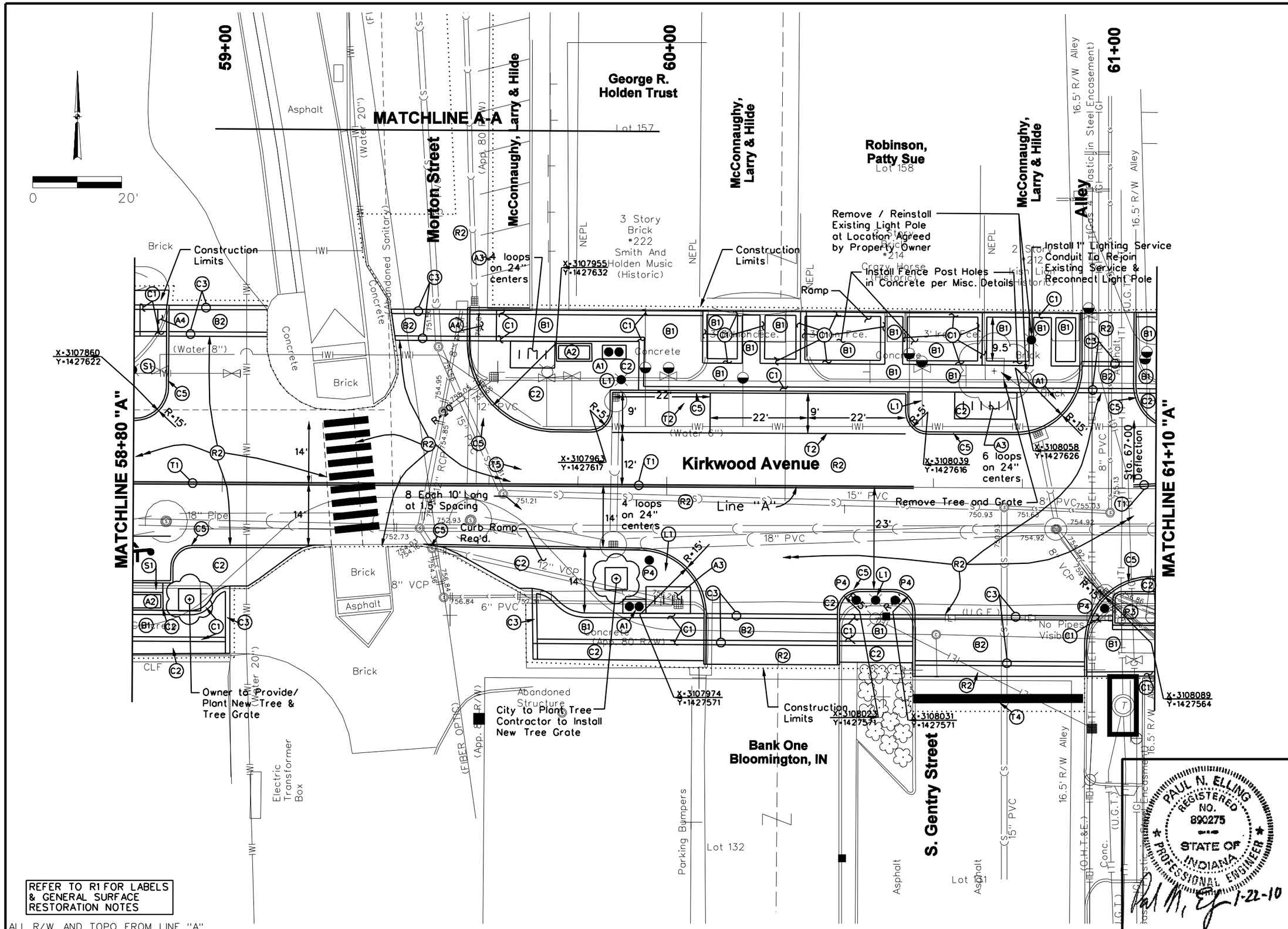

REFER TO R1 FOR LABELS & GENERAL SURFACE RESTORATION NOTES

ALL R/W AND TOPO FROM LINE "A"

Revision Number	Revision Description	Drawn By	Checked By	Date

Designed By	JAB
Drawn By	JAB
Checked By	TJM
Approved By	PNE
Filename	344TR04.DGN
Project No.	11715
Project Date	1/22/10

CITY OF BLOOMINGTON DEPT. OF PUBLIC WORKS
KIRKWOOD AVENUE STREETSCAPE PHASE III
COLLEGE AVENUE TO ROGERS STREET
BLOOMINGTON, INDIANA

SURFACE RESTORATION PLAN

DONOHUE & ASSOCIATES

Sheet No. 20

Drawing No. R4

$FILE$ $DATE$ $TIME$

...\Projects\11715\Dwg\344tr04.dgn 1/22/2010 3:28:27 PM

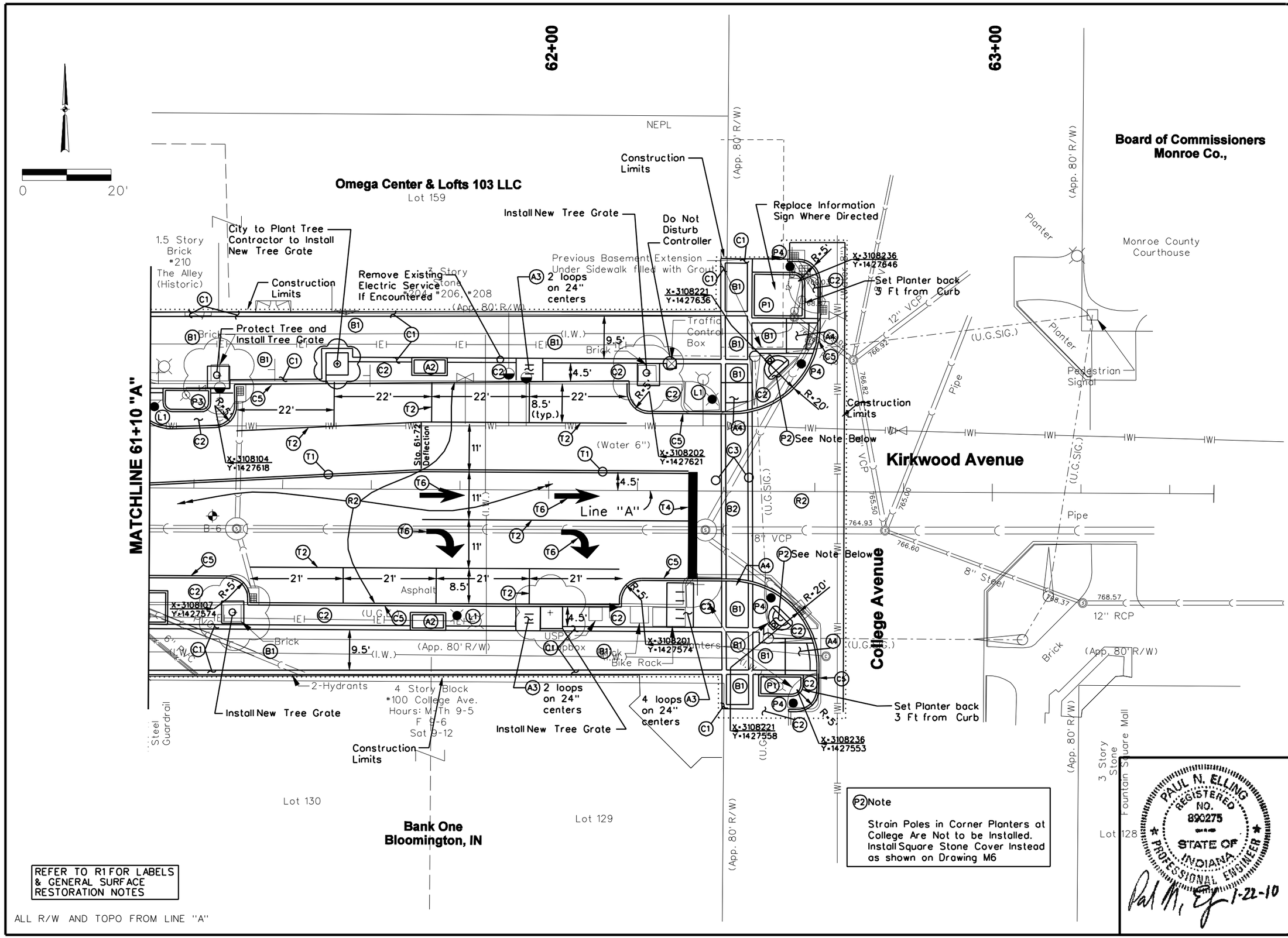

(P2) Note

Strain Poles in Corner Planters at College Are Not to be Installed. Install Square Stone Cover Instead as shown on Drawing M6

Revision Number	Revision Description	Drawn By	Checked By	Date

Designed By	JAB
Drawn By	JAB
Checked By	TJM
Approved By	PNE
Filename	344TR05.DGN
Project No.	11715
Project Date	1/22/10

CITY OF BLOOMINGTON DEPT. OF PUBLIC WORKS
KIRKWOOD AVENUE STREETSCAPE PHASE III
COLLEGE AVENUE TO ROGERS STREET
BLOOMINGTON, INDIANA

SURFACE RESTORATION PLAN

DONOHUE & ASSOCIATES

Sheet No. 21

Drawing No. R5

$DATE$ $TIME$ $FILE$

...\Projects\11715\Dwg\344tr05.dgn 1/22/2010 3:29:56 PM

MATCHLINE 58+80 "A"

Line "A"

Morton Street

Kirkwood Avenue

MATCHLINE A-A

McConnaughy, Larry & Hilde

George R. Holden Trust

Lot 157

McConnaughy, Larry & Hilde

Bank One Bloomington, IN

Construction Limits

X-3107936
Y-1427766

(App. 80' R/W)

(Water 20")

(Water 8")

(Water 6")

(FIBER OPTIC)

(Abandoned Sanitary)

15" PVC

12" RCP

18" PVC

12" VCP

8" VCP

6" PVC

Concrete

Brick

Asphalt

Abandoned Structure

3' Iron Fce.

NEPL

Smith And Holden Music (Historic) #222 3 Story Brick

Crazy H (Histor #214 2 Story Brick

Robin Patty Lot 1

REFER TO R1 FOR LABELS & GENERAL SURFACE RESTORATION NOTES

ALL R/W AND TOPO FROM LINE "A"

PAUL N. ELLING REGISTERED NO. 890275 STATE OF INDIANA PROFESSIONAL ENGINEER

1-22-10

Revision Number	Revision Description	Drawn By	Checked By	Date

Designed By	JAB
Drawn By	JAB
Checked By	TJM
Approved By	PNE
Filename	344TR06.DGN
Project No.	11715
Project Date	1/22/10

CITY OF BLOOMINGTON DEPT. OF PUBLIC WORKS
KIRKWOOD AVENUE STREETSCAPE PHASE III
COLLEGE AVENUE TO ROGERS STREET
BLOOMINGTON, INDIANA

SURFACE RESTORATION PLAN

DONOHUE & ASSOCIATES

Sheet No. 22

Drawing No. R6

$DATE$ $TIME$ $FILE$

...\Projects\11715\Dwg\344tr06.dgn 1/22/2010 3:31:14 PM

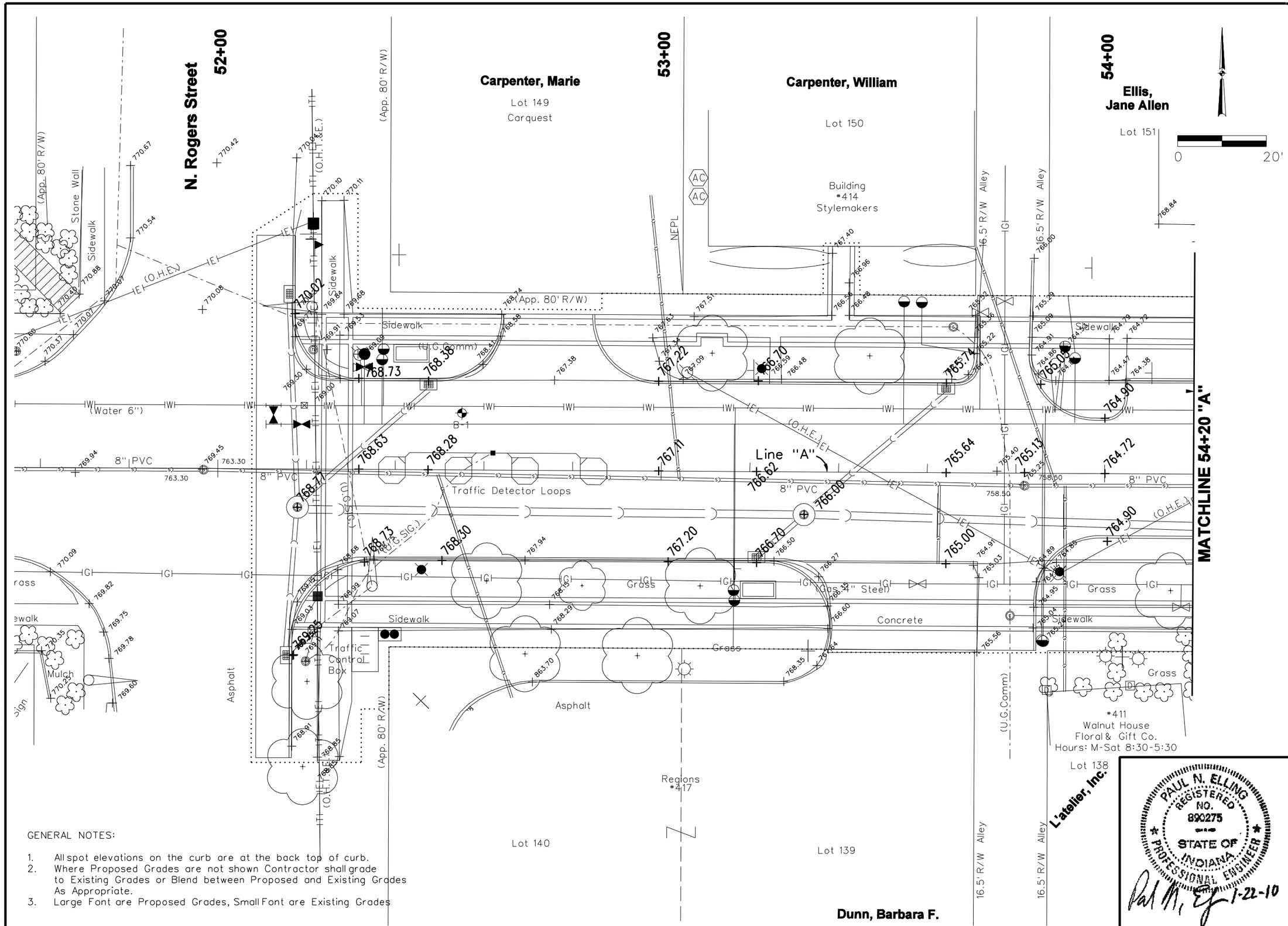

GENERAL NOTES:

1. All spot elevations on the curb are at the back top of curb.
2. Where Proposed Grades are not shown Contractor shall grade to Existing Grades or Blend between Proposed and Existing Grades As Appropriate.
3. Large Font are Proposed Grades, Small Font are Existing Grades

PAUL N. ELLING
REGISTERED
NO.
890275
STATE OF
INDIANA
PROFESSIONAL ENGINEER

1-22-10

Revision Number	Revision Description	Drawn By	Checked By	Date

Designed By	ARS
Drawn By	ARS
Checked By	PNE
Approved By	BR
Filename	344TR01.DGN
Project No.	11715
Project Date	1/22/10

CITY OF BLOOMINGTON DEPT. OF PUBLIC WORKS
KIRKWOOD AVENUE STREETSCAPE PHASE III
COLLEGE AVENUE TO ROGERS STREET
BLOOMINGTON, INDIANA

SPOT ELEVATIONS

DONOHUE & ASSOCIATES

Sheet No. 23

Drawing No. R7

$DATE$ $TIME$ $FILE$

...\11715\Dwg\344tse01.dgn 1/22/2010 3:32:24 PM

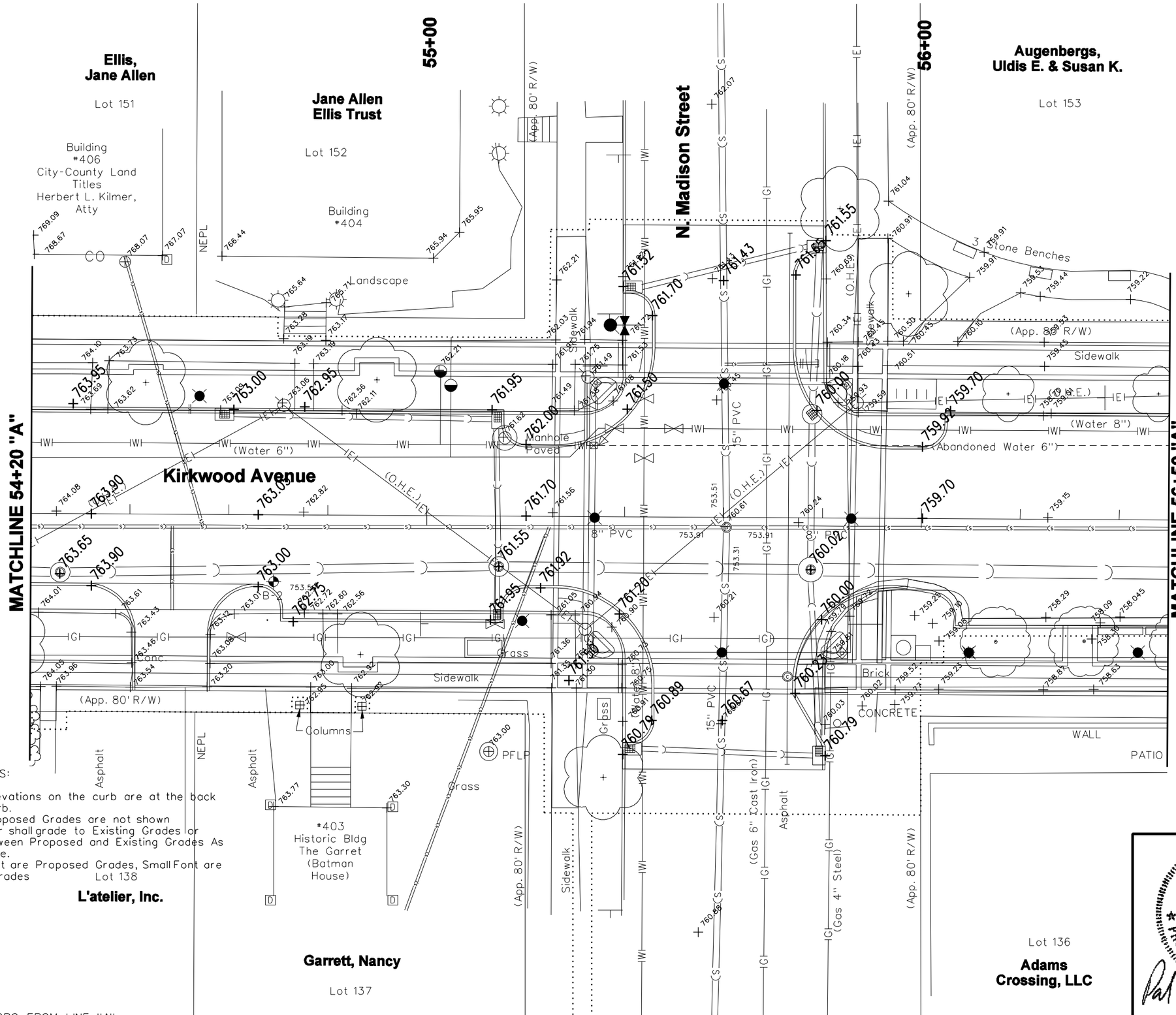

GENERAL NOTES:

1. All spot elevations on the curb are at the back top of curb.
2. Where Proposed Grades are not shown Contractor shall grade to Existing Grades or Blend between Proposed and Existing Grades As Appropriate.
3. Large Font are Proposed Grades, Small Font are Existing Grades

Lot 138

L'atelier, Inc.

Garrett, Nancy

Lot 137

Lot 136

Adams Crossing, LLC

ALL R/W AND TOPO FROM LINE "A"

PAUL N. ELLING
REGISTERED
NO.
890275
STATE OF
INDIANA
PROFESSIONAL ENGINEER

1-22-10

Revision Number	Revision Description	Drawn By	Checked By	Date

Designed By	JAB
Drawn By	JAB
Checked By	PNE
Approved By	PE
Filename	344TSE02.DGN
Project No.	11715
Project Date	1/22/10

CITY OF BLOOMINGTON DEPT. OF PUBLIC WORKS
KIRKWOOD AVENUE STREETSCAPE PHASE III
COLLEGE AVENUE TO ROGERS STREET
BLOOMINGTON, INDIANA

SPOT ELEVATIONS

DONOHUE & ASSOCIATES

Sheet No. 24

Drawing No. R8

$TIME$ $DATE$ $FILE$

...\11715\Dwg\344tse02.dgn 1/22/2010 3:40:29 PM

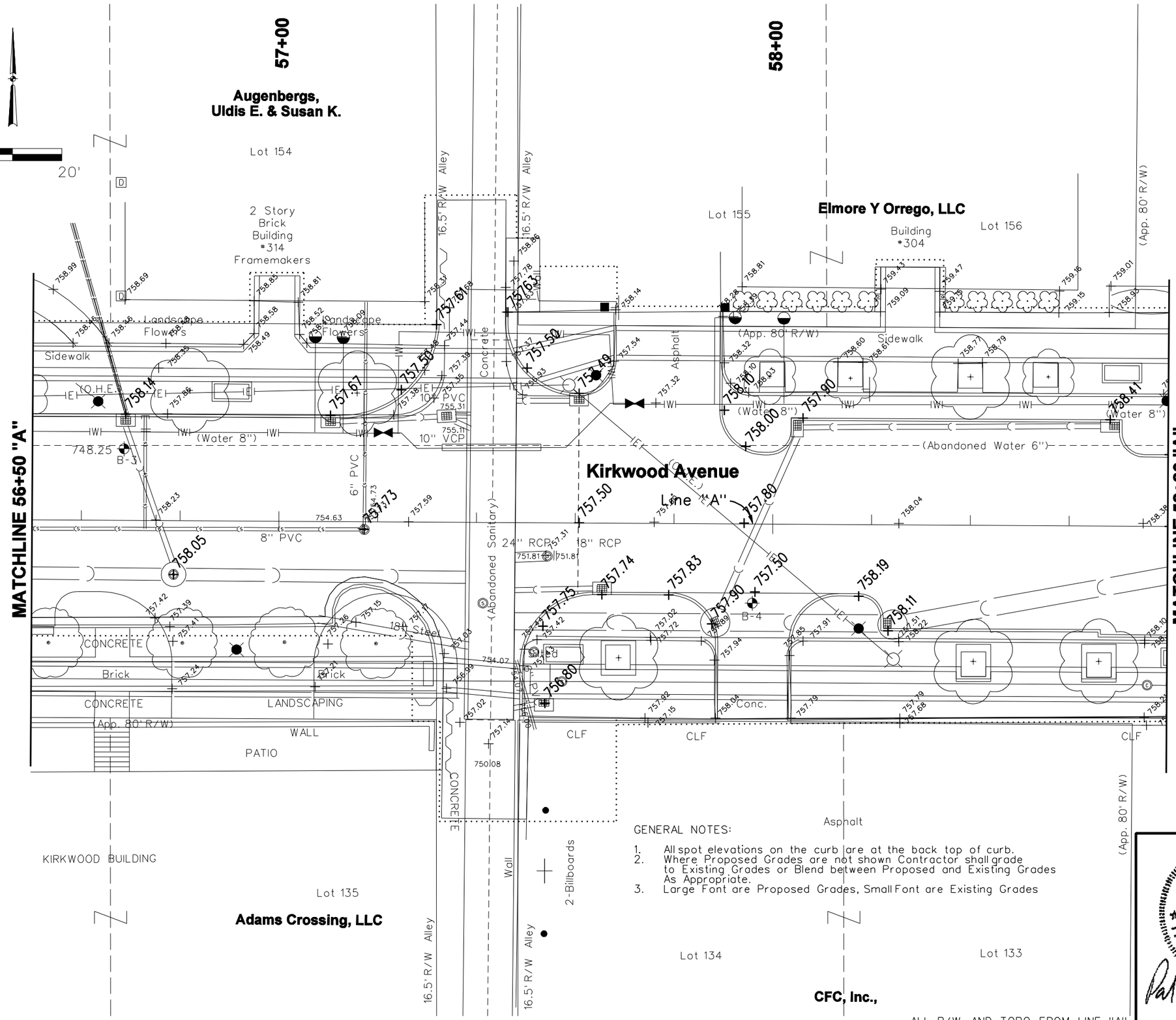

GENERAL NOTES:

1. All spot elevations on the curb are at the back top of curb.
2. Where Proposed Grades are not shown Contractor shall grade to Existing Grades or Blend between Proposed and Existing Grades As Appropriate.
3. Large Font are Proposed Grades, Small Font are Existing Grades

PAUL N. ELLING
REGISTERED
NO.
890275
STATE OF
INDIANA
PROFESSIONAL ENGINEER

1-22-10

Revision Number	Revision Description	Drawn By	Checked By	Date

Designed By	JAB
Drawn By	JAB
Checked By	PNE
Approved By	PE
Filename	344TSE03.DG
Project No.	11715
Project Date	1/22/10

CITY OF BLOOMINGTON DEPT. OF PUBLIC WORKS
KIRKWOOD AVENUE STREETSCAPE PHASE III
COLLEGE AVENUE TO ROGERS STREET
BLOOMINGTON, INDIANA

SPOT ELEVATIONS

DONOHUE & ASSOCIATES

Sheet No. 25

Drawing No. R9

$FILE$ $DATE$ $TIME$

...\11715\Dwg\344tse03.dgn 1/22/2010 3:41:47 PM

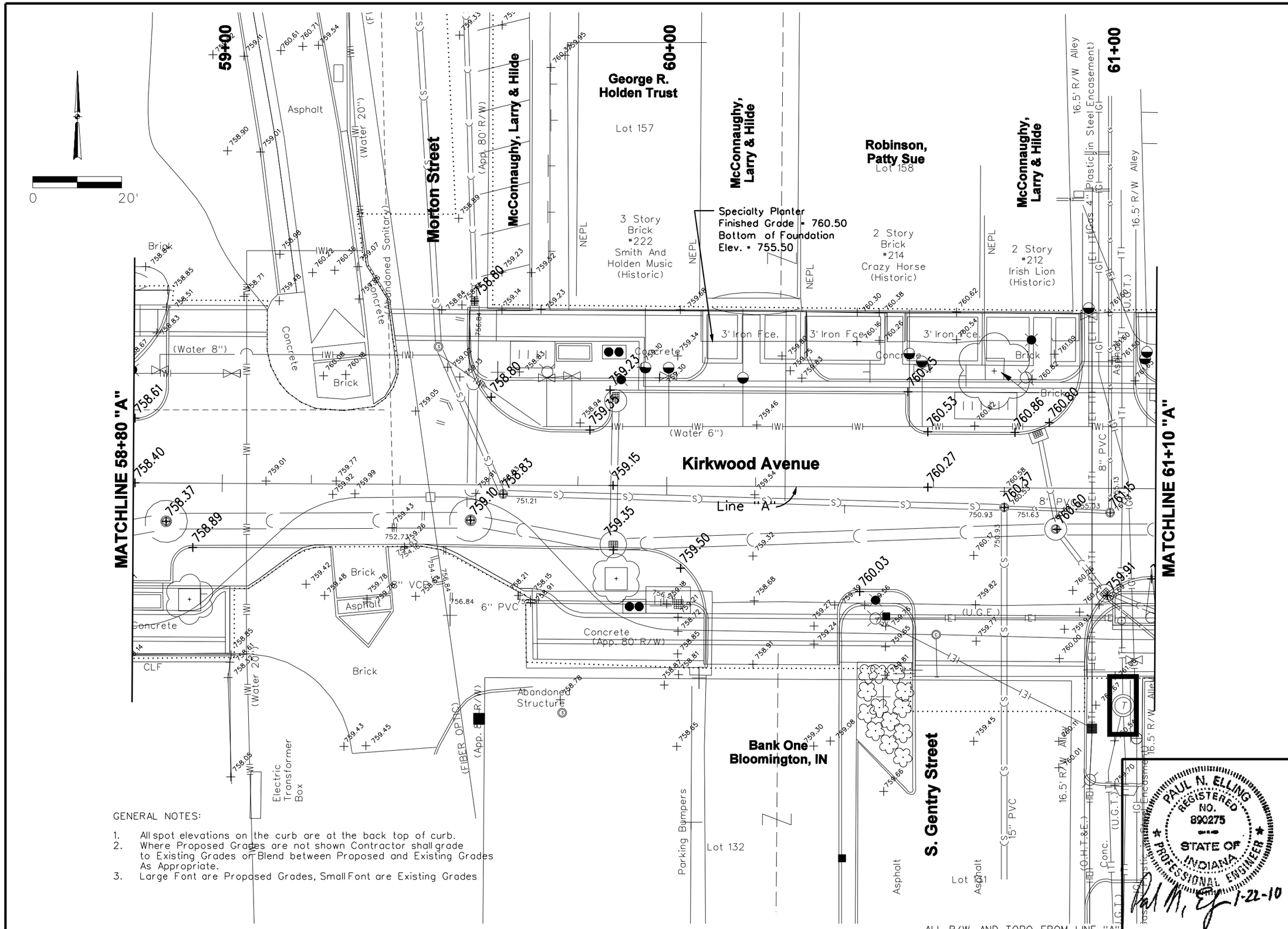

GENERAL NOTES:

1. All spot elevations on the curb are at the back top of curb.
2. Where Proposed Grades are not shown Contractor shall grade to Existing Grades or Blend between Proposed and Existing Grades As Appropriate.
3. Large Font are Proposed Grades, Small Font are Existing Grades

ALL R/W AND TOPO FROM LINE "A"

PAUL N. ELLING REGISTERED NO. 890275 STATE OF INDIANA PROFESSIONAL ENGINEER

1-22-10

Revision Number	Revision Description	Drawn By	Checked By	Date

Designed By	JAB
Drawn By	JAB
Checked By	PNE
Approved By	PE
Filename	344TSE04.DG
Project No.	11715
Project Date	1/22/10

CITY OF BLOOMINGTON DEPT. OF PUBLIC WORKS
KIRKWOOD AVENUE STREETSCAPE PHASE III
COLLEGE AVENUE TO ROGERS STREET
BLOOMINGTON, INDIANA

SPOT ELEVATIONS

DONOHUE & ASSOCIATES

Sheet No. 26

Drawing No. R10

$FILE$ $DATE$ $TIME$

...\11715\Dwg\344tse04.dgn 1/22/2010 3:43:19 PM

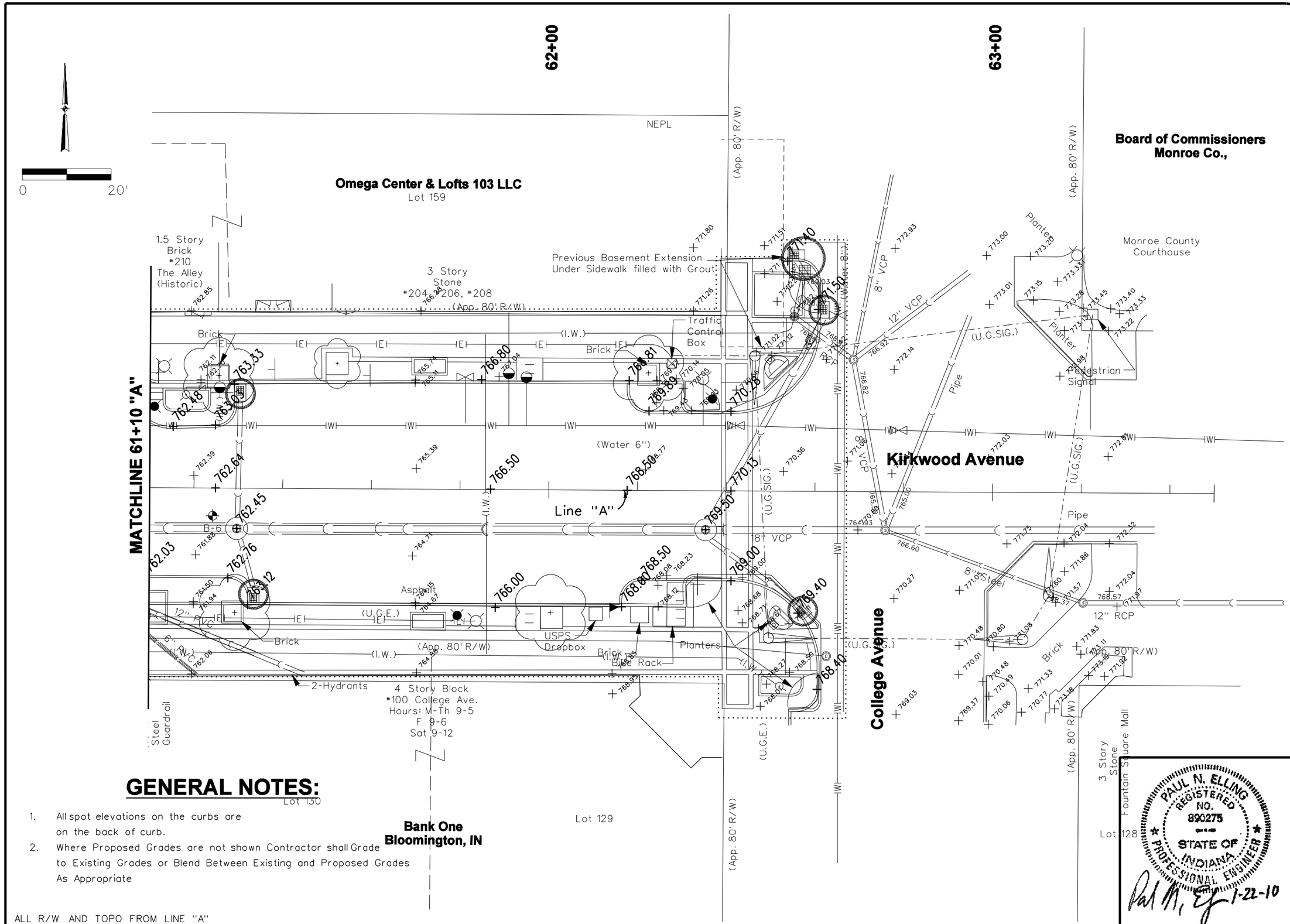

GENERAL NOTES:

1. All spot elevations on the curbs are on the back of curb.
2. Where Proposed Grades are not shown Contractor shall Grade to Existing Grades or Blend Between Existing and Proposed Grades As Appropriate

ALL R/W AND TOPO FROM LINE "A"

PAUL N. ELLING
REGISTERED
NO.
890275
STATE OF
INDIANA
PROFESSIONAL ENGINEER
1-22-10

Revision Number	Revision Description	Drawn By	Checked By	Date

Designed By	JAB
Drawn By	JAB
Checked By	PNE
Approved By	PE
Filename	344TSE05.DG
Project No.	11715
Project Date	1/22/10

CITY OF BLOOMINGTON DEPT. OF PUBLIC WORKS
KIRKWOOD AVENUE STREETSCAPE PHASE III
COLLEGE AVENUE TO ROGERS STREET
BLOOMINGTON, INDIANA

SPOT ELEVATIONS

DONOHUE & ASSOCIATES

Sheet No. 27

Drawing No. R11

$DATE$ $TIME$ $FILE$

...\11715\Dwg\344tse05.dgn 1/22/2010 3:44:12 PM

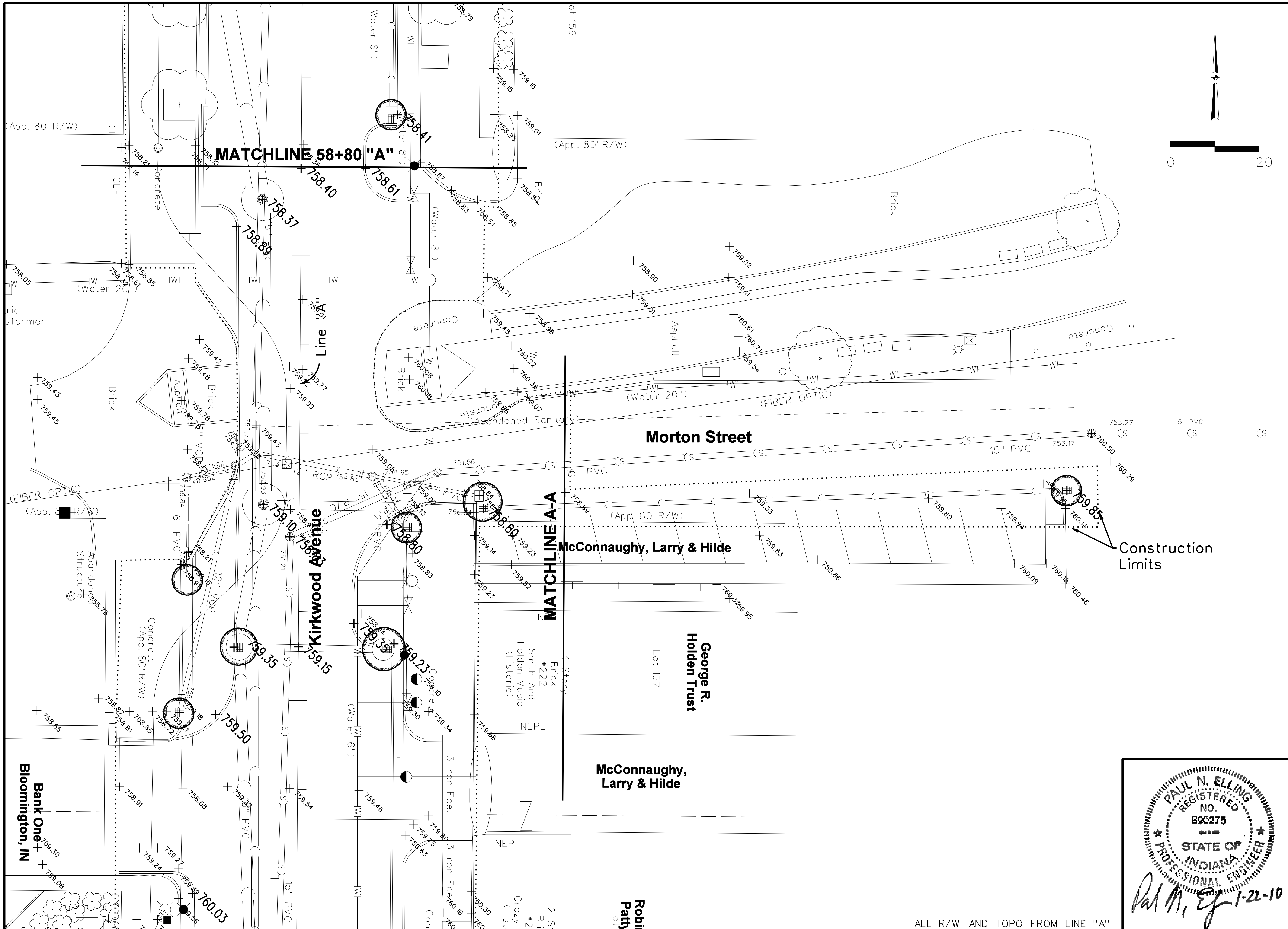

ALL R/W AND TOPO FROM LINE "A"

PAUL N. ELLING
REGISTERED
NO.
890275
STATE OF
INDIANA
PROFESSIONAL ENGINEER
1-22-10

Revision Number	Revision Description	Drawn By	Checked By	Date

Designed By	JAB
Drawn By	JAB
Checked By	PNE
Approved By	PE
Filename	344TR12.DGN
Project No.	11715
Project Date	1/22/10

CITY OF BLOOMINGTON DEPT. OF PUBLIC WORKS
KIRKWOOD AVENUE STREETSCAPE PHASE III
COLLEGE AVENUE TO ROGERS STREET
BLOOMINGTON, INDIANA

SPOT ELEVATIONS

DONOHUE & ASSOCIATES

Sheet No. 28

Drawing No. R12

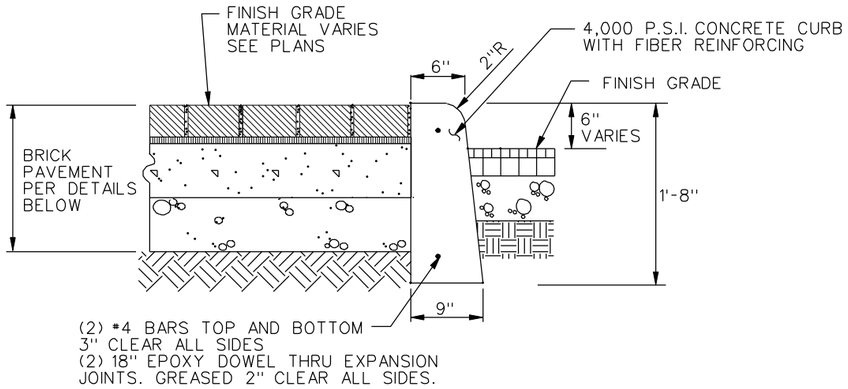

BRICK PAVING/CONCRETE CURB

NO SCALE

NOTES:
1. HAND FINISH CURB TO A 6" DEPTH (TYP.)
2. MACHINE FORMED CURB IS PERMISSIBLE WITH INDOT CLASS A CONCRETE IN LIEU OF REBARS, EXP.JT.DOWELS STILL REQUIRED.

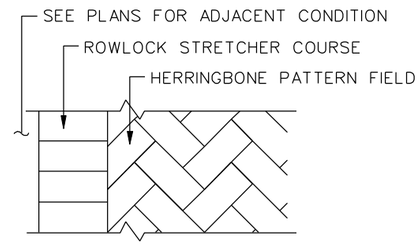

SIDEWALK BRICK LAYOUT

NOTE:
APPLIES WHERE BRICK PAVING IS TO BE CONSTRUCTED ADJACENT TO NEW CURB.

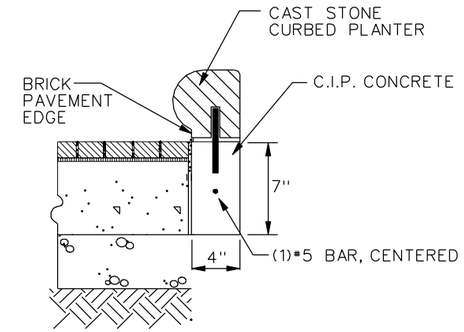

BRICK PAVEMENT EDGE AT PLANTER

NO SCALE

Note:

All Brick Pavers shall generally match the color and texture of the existing Brick Pavers on previously completed sections of Kirkwood between Walnut and Dunn Streets.

Brick Pavers shall be Pathway Full Range Red 4 x 8 x 2-1/4" thick Clay Solid (uncored) Brick Pavers by Pine Hall Brick Company or equal, complying with ASTM C902 in pedestrian areas and ASTM C1272 in vehicular areas.

Brick Pavers shall meet the absorbtion and freeze thaw requirements in the ASTM specifications without the use of sealers or products applied to the pavers.

Pine Hall Brick Company, Madison North Carolina 27025, www.pinehallbrick.com

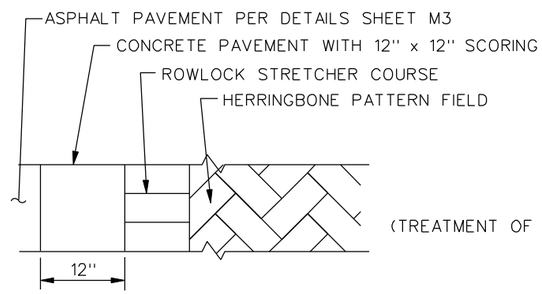

(TREATMENT OF OPPOSITE SIDE SAME)

CROSSWALK BRICK LAYOUT

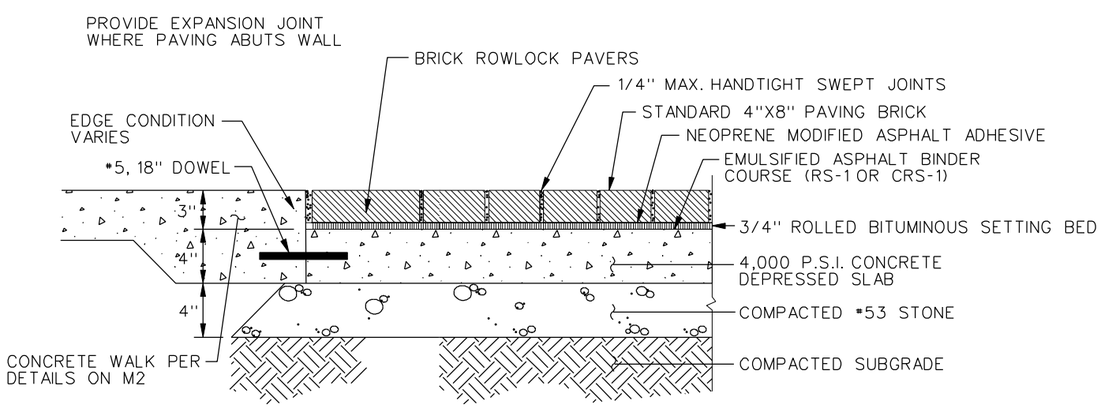

(B1) BRICK PAVEMENT/ CONCRETE SIDEWALK

(PEDESTRIAN AREAS)
NO SCALE

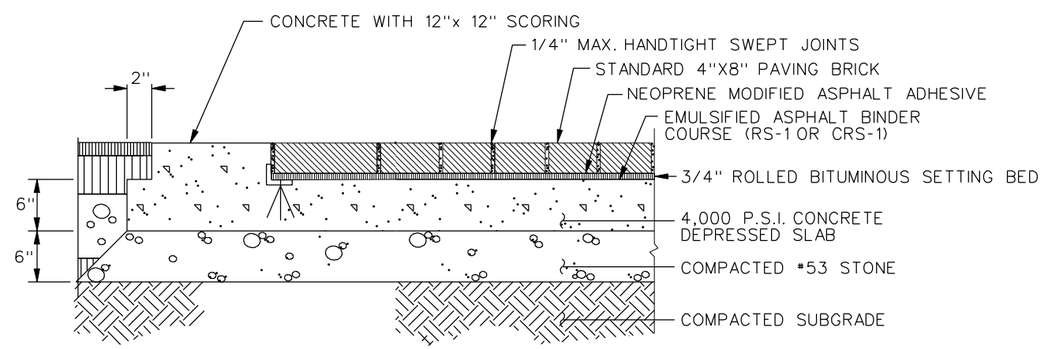

(B2) HEAVY DUTY BRICK PAVEMENT

(CROSSWALKS IN STREETS AND DRIVES)
NO SCALE

NOTE: PROVIDE EXPANSION JOINT WHERE PAVING ABUTS WALL

PAUL N. ELLING
REGISTERED
NO.
890275
STATE OF
INDIANA
PROFESSIONAL ENGINEER
1-22-10

Revision Number	Revision Description	Drawn By	Checked By	Date

Designed By	ARS
Drawn By	ARS
Checked By	PNE
Approved By	BR
Filename	344TD01.DGN
Project No.	11715
Project Date	1/22/10

CITY OF BLOOMINGTON DEPT. OF PUBLIC WORKS
KIRKWOOD AVENUE STREETSCAPE PHASE III
COLLEGE AVENUE TO ROGERS STREET
BLOOMINGTON, INDIANA

BRICK PAVING DETAILS

DONOHUE & ASSOCIATES

Sheet No. 29

Drawing No. M1

$FILE$ $DATE$ $TIME$

...\Projects\11715\Dwg\344td01.dgn 1/21/2010 5:03:50 PM

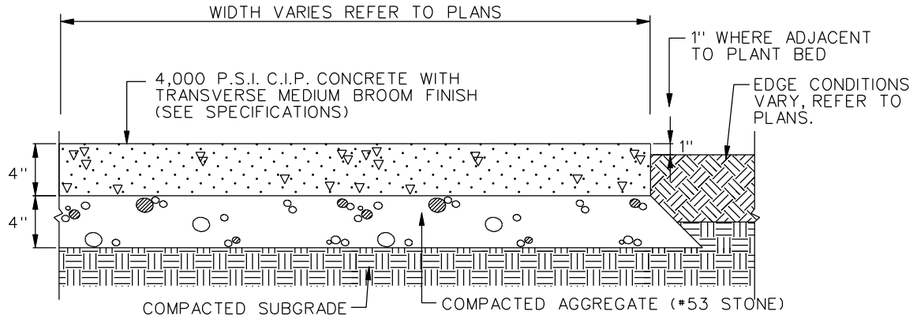

C1 C2 C3 4" CONCRETE WALK

FOR SIDEWALKS
NO SCALE
SEE PLANS FOR LOCATIONS

C1 IS TO BE TOOLED AT 3' GRID AS SPACE ALLOWS.
C2 IS TO BE TOOLED PER STANDARD SPECIFICATIONS
C3 IS TO BE TOOLED AT 1' GRID AS SPACE ALLOWS.

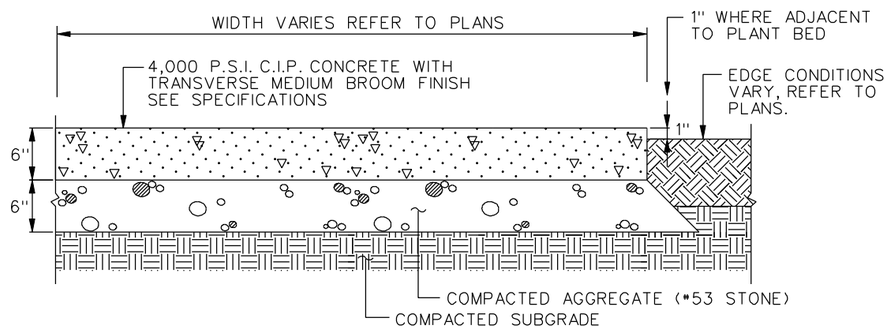

C4 6" CONCRETE PAVEMENT

FOR DRIVES AND ALLEYS
NO SCALE
SEE PLANS FOR LOCATIONS

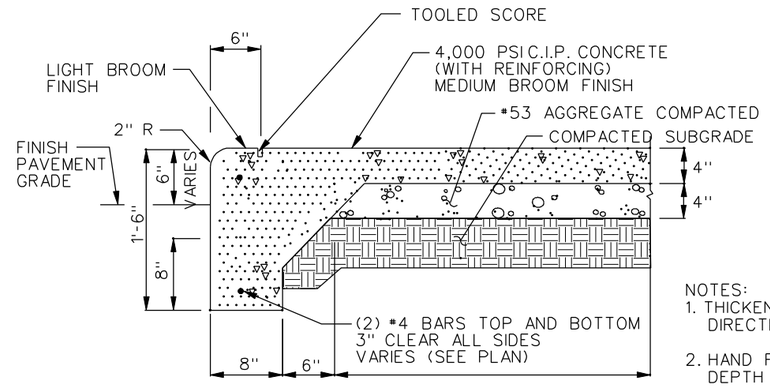

INTEGRAL CURB AND WALK

NO SCALE

NOTES:
1. THICKEN SLAB WHERE AND AS DIRECTED BY OTHER DETAILS.
2. HAND FINISH CURB TO A 6" DEPTH (TYP.).
3. THIS DETAIL TO BE USED WHERE NEW CONCRETE WALKS ARE NEXT TO NEW CURBS SHOWN ON SURFACE RESTORATION DETAILS AS C1 C2 C3

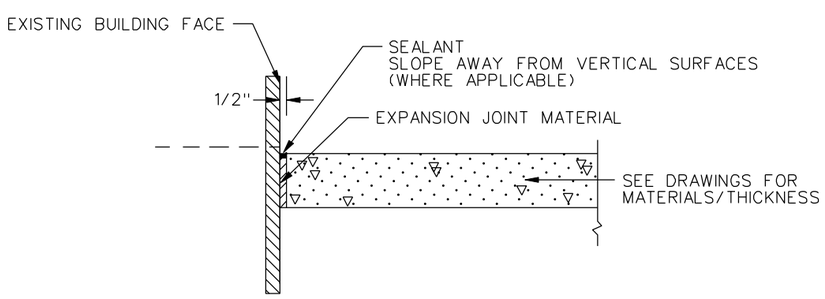

EXPANSION JOINT AT EXISTING BUILDINGS

NO SCALE

NOTE:
USE "ZIP-STRIP" EXPANSION MATERIAL WITH REMOVABLE CAP BY GREENSTREAK, OR APPROVED EQUAL.

NOTE:
EXPANSION JOINT MATERIAL SHALL BE "ZIP-STRIP" EXPANSION MATERIAL WITH REMOVABLE CAP BY GREENSTREAK OR APPROVED EQUAL.

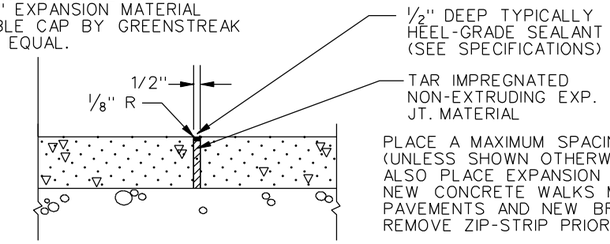

PLACE A MAXIMUM SPACING OF 21' O.C. (UNLESS SHOWN OTHERWISE) IN WALKS. ALSO PLACE EXPANSION JOINT WHERE NEW CONCRETE WALKS MEET EXISTING PAVEMENTS AND NEW BRICK PAVEMENT. REMOVE ZIP-STRIP PRIOR TO APPLYING SEALANT

EXPANSION JOINT

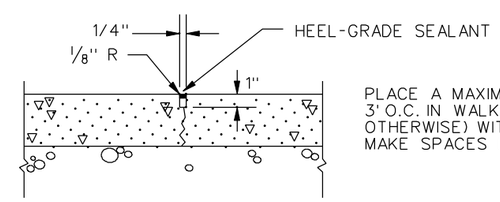

PLACE A MAXIMUM SPACING OF 3' O.C. IN WALKS (UNLESS SHOWN OTHERWISE) WITHIN EACH RUN, MAKE SPACES EQUAL.

CONTRACTION JOINT

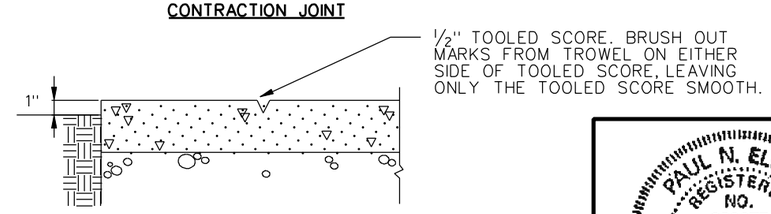

TOOLED SCORE

JOINTING IN CONCRETE

NO SCALE

PAUL N. ELLING REGISTERED NO. 890275 STATE OF INDIANA PROFESSIONAL ENGINEER
1-22-10

Revision Number	Revision Description	Drawn By	Checked By	Date

Designed By	ARS
Drawn By	ARS
Checked By	PNE
Approved By	BR
Filename	344TD02.DGN
Project No.	11715
Project Date	1/22/10

CITY OF BLOOMINGTON DEPT. OF PUBLIC WORKS
KIRKWOOD AVENUE STREETSCAPE PHASE III
COLLEGE AVENUE TO ROGERS STREET
BLOOMINGTON, INDIANA

CONCRETE PAVEMENT, SIDEWALK, AND CURB DETAILS

DONOHUE & ASSOCIATES

Sheet No. 30
Drawing No. M2

$TIME$
$DATE$
$FILE$

...\Projects\11715\Dwg\344td02.dgn 1/21/2010 5:06:52 PM

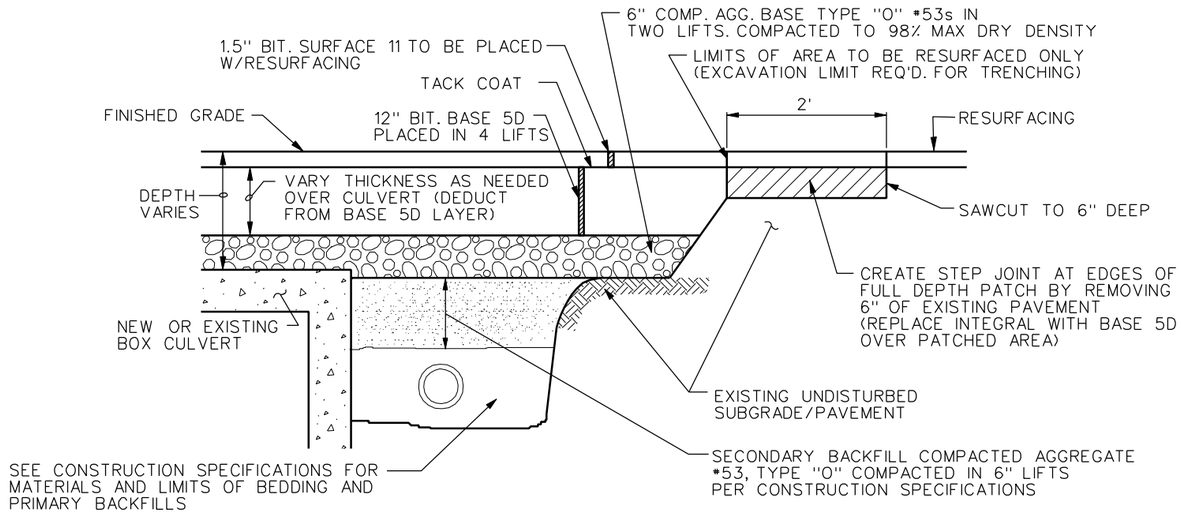

OVER BOX CULVERT OVER UTILITY TRENCH OTHER AREAS (TREATMENT OF JOINT TO EXISTING PAVEMENT)

STREETS

ASPHALT PAVEMENT PATCHING DETAILS

NO SCALE

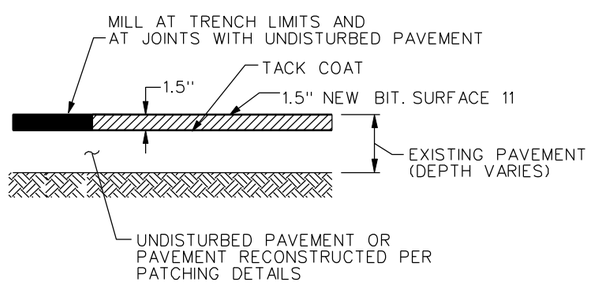

STREET RESURFACING DETAILS

NO SCALE

NOTES:
1. MILL PAVEMENTS PRIOR TO TRENCHING FOR UTILITIES WHENEVER POSSIBLE.
2. ADJUST ALL CASTINGS TO PROPER FINISH GRADE PRIOR TO FINAL PAVING.
3. PAVEMENT BELOW MILLING WHICH IS EXCAVATED FOR UTILITY OR CULVERT CONSTRUCTION TO BE RECONSTRUCTED PER PAVEMENT PATCHING DETAILS ON THIS SHEET.
4. THIS DETAIL APPLIES IN ALL STREET AREAS TO RECEIVE ASPHALT PAVEMENT EXCEPT THOSE TO RECEIVE A CONCRETE AND BRICK INLAY. SEE PLANS FOR LOCATIONS AND SHEET M1 FOR DETAILS.
5. MINIMUM MILLING WIDTH OF 5 FT AT CONNECTIONS TO UNDISTURBED PAVEMENT.

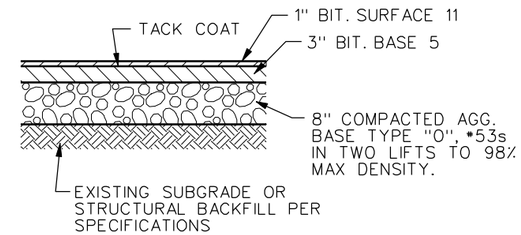

DRIVES AND ALLEYS

NOTES:
1. THIS DETAIL APPLIES IN ALL DRIVES AND ALLEYS TO RECEIVE ASPHALT PAVEMENT EXCEPT IN AREAS TO RECEIVE A CONCRETE AND BRICK INLAY. SEE PLANS FOR LOCATIONS AND SHEET M1 FOR DETAILS.
2. TREATMENT OVER UTILITY TRENCHES AND BOX CULVERTS AS SHOWN TO LEFT.

PAVEMENT RECONSTRUCTION / PATCHING LIMITS
THE NEED FOR SUBSURFACE WORK AND CURB REPLACEMENT SHALL DEFINE THE LIMITS OF FULL DEPTH PAVEMENT PATCHING/PAVEMENT RECONSTRUCTION. SITE CONSTRAINTS AND REGULATORY REQUIREMENTS, INCLUDING OSHA, SHALL SET TRENCHING WIDTHS AND SLOPES.

PAUL N. ELLING REGISTERED NO. 890275 STATE OF INDIANA PROFESSIONAL ENGINEER
1-22-10

Revision Number	Revision Description	Drawn By	Checked By	Date

Designed By	ARS
Drawn By	ARS
Checked By	PNE
Approved By	BR
Filename	344TD03.DGN
Project No.	11715
Project Date	1/22/10

CITY OF BLOOMINGTON DEPT. OF PUBLIC WORKS
KIRKWOOD AVENUE STREETSCAPE PHASE III
COLLEGE AVENUE TO ROGERS STREET
BLOOMINGTON, INDIANA

ASPHALT PAVING DETAILS

DONOHUE & ASSOCIATES

Sheet No. 31

Drawing No. M3

$FILE$ $DATE$ $TIME$

...\Projects\11715\Dwg\344td03.dgn 1/27/2010 4:08:40 PM

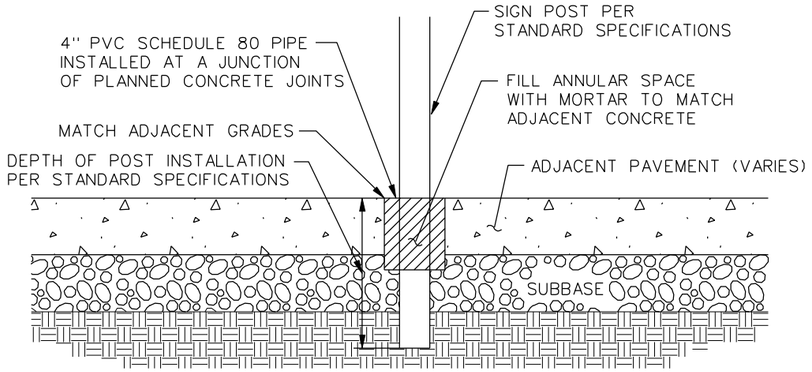

SIGN INSTALLATIONS IN SIDEWALKS

NO SCALE

SIGN RELOCATION NOTES:

1. CONTRACTOR WILL COORDINATE WITH CITY TO HAVE EXISTING SIGNS REMOVED AT APPROPRIATE TIMES.
2. CONTRACTOR TO INSTALL PVC INSERTS AS SHOWN FOR OWNER'S USE IN RELOCATING SIGNS.
3. CONTRACTOR IS RESPONSIBLE FOR PROVIDING AND INSTALLING 2 EA W11A-2 (SYMBOLIC CROSSING) SIGNS.
4. ALL EXISTING SIGNS WILL BE RESET BY OWNER IN CONTRACTOR PROVIDED INSERTS UNLESS SHOWN OTHERWISE.

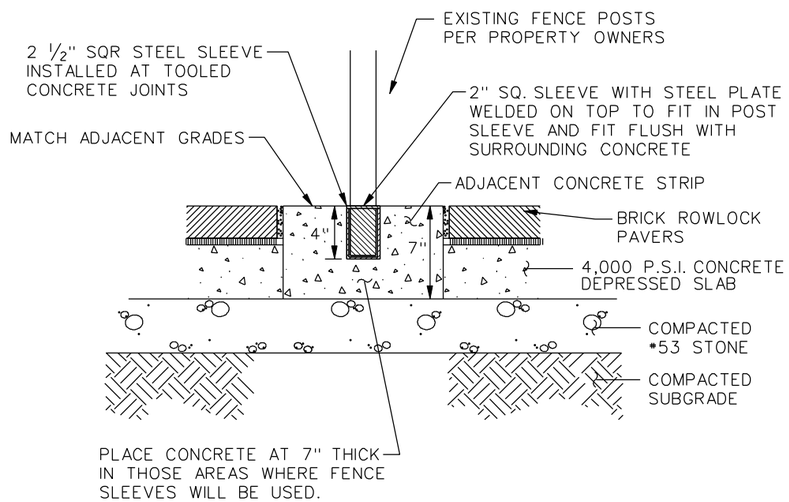

OUTDOOR DINING FENCE INSERTS

NO SCALE

FENCE INSERT NOTES:

1. CONTRACTOR TO INSTALL 2½" SQR STEEL SLEEVES IN CONCRETE AS SHOWN.
2. CONTRACTOR TO COORDINATE LOCATION AND SPACING OF INSERTS WITH EACH RESTAURANTS' EXISTING FENCING. SPACING MAY VARY.
3. CONTRACTOR TO COORDINATE FENCE POST LOCATIONS WITH RELOCATED LIGHT POLE TO BE PLACED AT EXISTING FENCE CORNER BETWEEN THE IRISH LION & THE CRAZY HORSE.
4. CONTRACTOR TO FURNISH 2" SQR STEEL INSERT FOR EACH POST SLEEVE. INSERTS WILL BE GIVEN TO PROPERTY OWNERS FOR THEIR USE IN CLOSING HOLES WHEN FENCE IS NOT BEING USED. CONTRACTOR SHALL ENSURE A PROPER FIT OF EACH INSERT PRIOR TO TURN OVER TO PROPERTY OWNER.

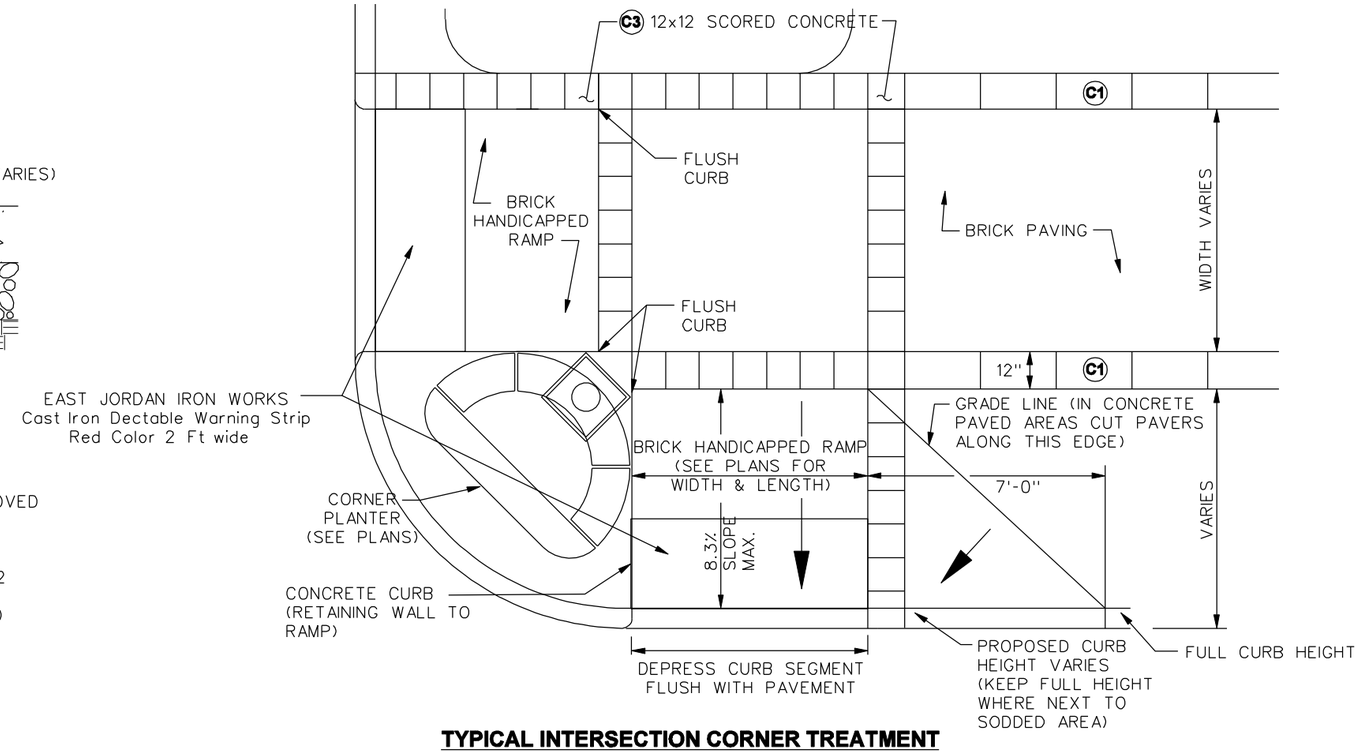

TYPICAL INTERSECTION CORNER TREATMENT

NO SCALE

(REFER TO CONCRETE JOINTING DETAIL FOR JOINTING REQ'D.)

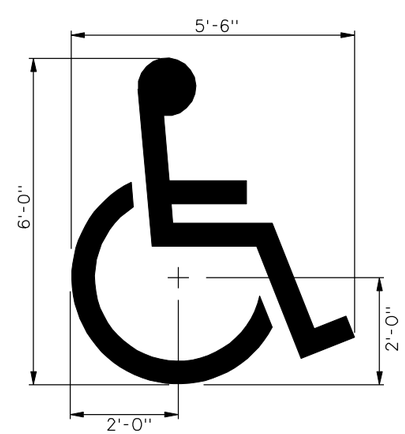

SYMBOL SHALL BE BLUE THERMOPLASTIC APPLIED AT A WIDTH OF 4" AT LOCATIONS SHOWN IN PLANS.

DISABLED ACCESSIBILITY SYMBOL

NO SCALE

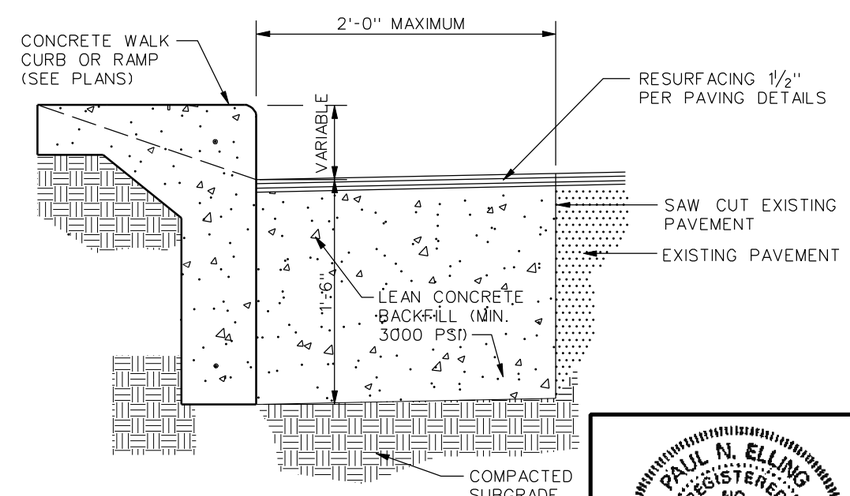

PAVEMENT PATCH DETAIL

NO SCALE

NOTE: THIS DETAIL MAY BE USED IN LIEU OF FULL DEPTH ASPHALT PATCH IN AREAS WHERE ROAD EXCAVATION WAS RESULT OF CURB CONSTRUCTION ONLY

PAUL N. ELLING REGISTERED NO. 890275 STATE OF INDIANA PROFESSIONAL ENGINEER

1-22-10

Revision Number	Revision Description	Drawn By	Checked By	Date

Designed By	JAB
Drawn By	JAB
Checked By	PNE
Approved By	PNE
Filename	344TD04.DGN
Project No.	11715
Project Date	1/22/10

CITY OF BLOOMINGTON DEPT. OF PUBLIC WORKS
KIRKWOOD AVENUE STREETSCAPE PHASE III
COLLEGE AVENUE TO ROGERS STREET
BLOOMINGTON, INDIANA

MISCELLANEOUS PAVEMENT DETAILS

DONOHUE & ASSOCIATES

Sheet No. 32

Drawing No. M4

$DATE$ $TIME$ $FILE$

...\Projects\11715\Dwg\344td04.dgn 1/21/2010 5:22:11 PM

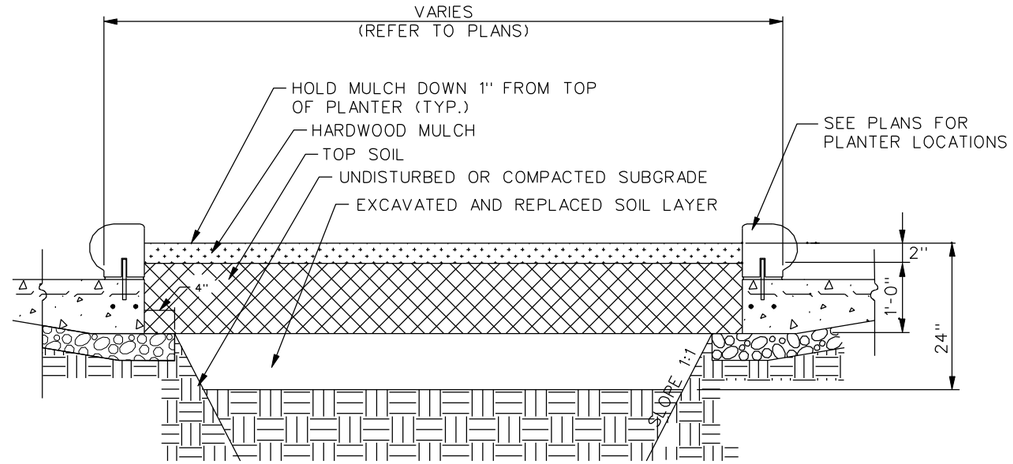

PLANTER PIT DETAIL
(CORNER, CURBED OR TYPE "A" PLANTER)
NO SCALE
(SEE PLANS FOR DIMENSIONS OF PLANTER)

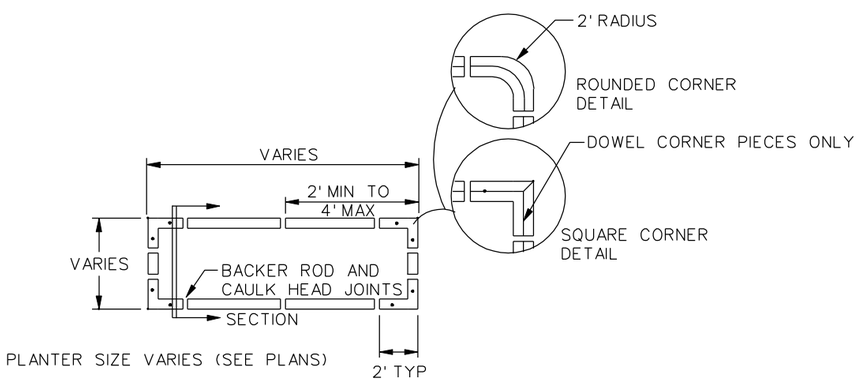

PLAN

NOTES:
1. SOIL PREPARATION TO BE INCLUDED IN THE WORK OF THIS PROJECT.

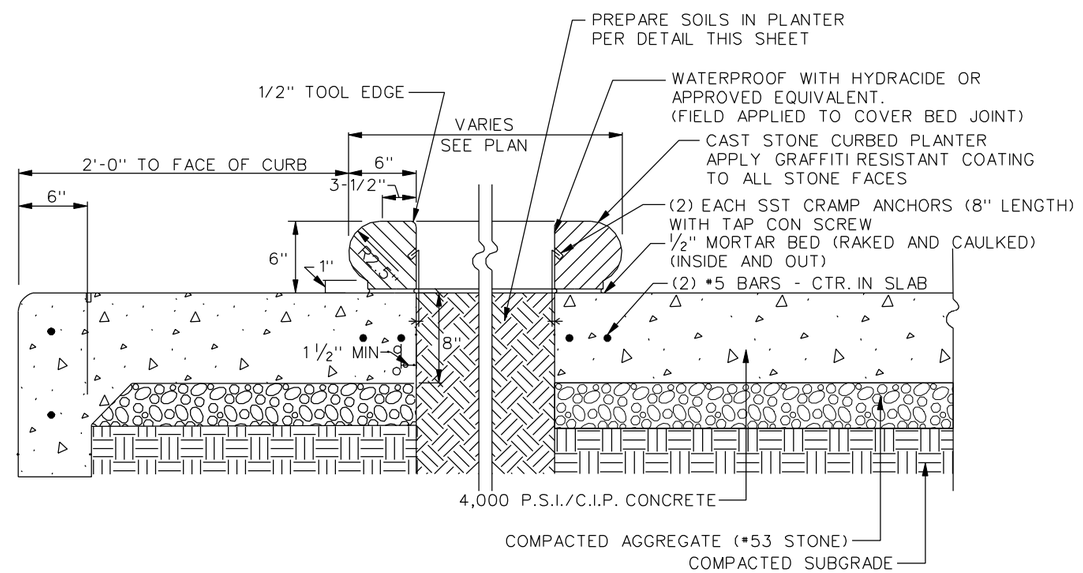

(SEE PLAN FOR SIZES)

CURBED PLANTER DETAILS - SECTION / PLAN
NO SCALE

PAUL N. ELLING REGISTERED NO. 890275 STATE OF INDIANA PROFESSIONAL ENGINEER
1-22-10

Revision Number	Revision Description	Drawn By	Checked By	Date

Designed By	JAB
Drawn By	JAB
Checked By	PNE
Approved By	PNE
Filename	344TD05.DGN
Project No.	11715
Project Date	1/22/10

CITY OF BLOOMINGTON DEPT. OF PUBLIC WORKS
KIRKWOOD AVENUE STREETSCAPE PHASE III
COLLEGE AVENUE TO ROGERS STREET
BLOOMINGTON, INDIANA

MISCELLANEOUS PLANTER DETAILS

DONOHUE & ASSOCIATES

Sheet No. 33
Drawing No. M5

$FILE$ $DATE$ $TIME$

...\Projects\11715\Dwg\344td05.dgn 1/27/2010 3:39:47 PM

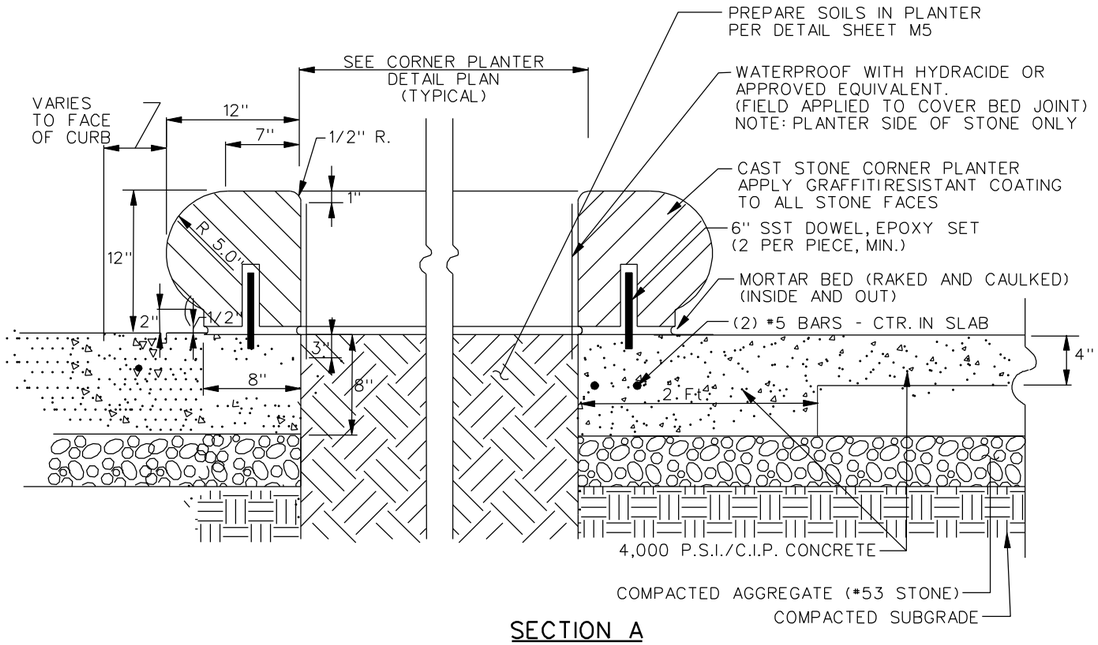

SECTION A

A / M6 CORNER PLANTER LAYOUT

NO SCALE
(SEE PLAN FOR SIZES)

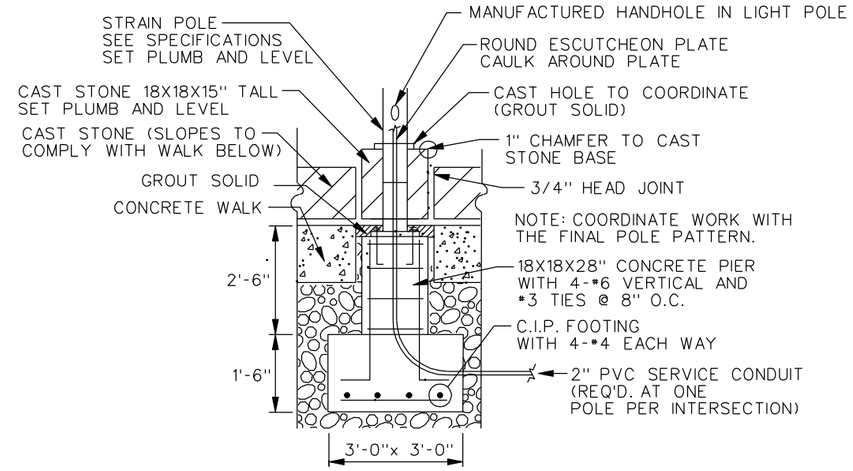

SECTION B

NOTES:
1. CONTRACTOR TO COORDINATE ANCHOR BOLTS FOR POLE MOUNTING WITH STRAIN POLE MANUFACTURER'S RECOMMENDATIONS
2. DELETE STRAIN POLES AT COLLEGE AND INSTALL TEMPORARY STRAIN POLE CAP. ALL OTHER FEATURES REMAIN UNCHANGED.

STRAIN POLE / ANCHOR DETAIL

NO SCALE

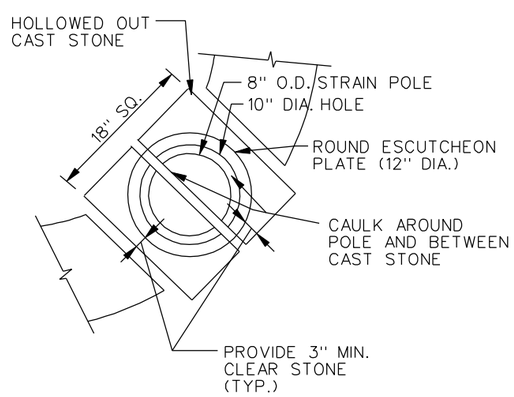

B / M6 STRAIN POLE PLAN

NO SCALE

THIS DETAIL APPLICABLE TO THE CORNER PLANTERS AT MADISON WHERE THE STRAIN POLES WILL BE INSTALLED

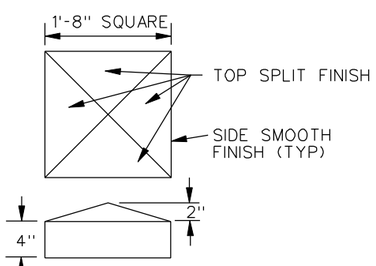

C / M6 TEMPORARY STRAIN POLE CAP

NO SCALE

THIS DETAIL APPLICABLE ONLY TO THE CORNER PLANTERS AT COLLEGE WHERE THE STRAIN POLES WILL NOT BE INSTALLED. MORTAR TOP STONE TO HOLLOWED CAST STONE FOR REMOVAL IN FUTURE. TEMPORARY STONE CAP TO HAVE GRAFFITI RESISTANT COATING.

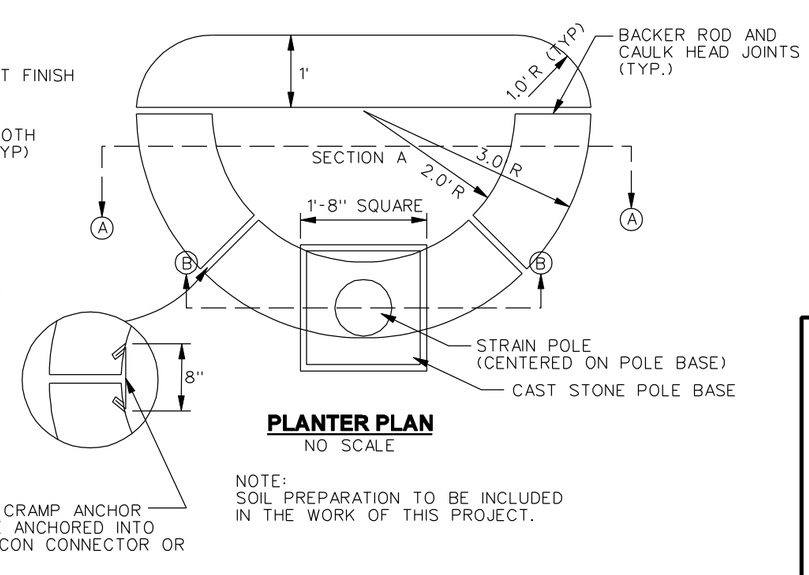

PLANTER PLAN

NO SCALE

NOTE:
SOIL PREPARATION TO BE INCLUDED IN THE WORK OF THIS PROJECT.

PAUL N. ELLING REGISTERED NO. 890275 STATE OF INDIANA PROFESSIONAL ENGINEER

1-22-10

Revision Number	Revision Description	Drawn By	Checked By	Date

Designed By	JAB
Drawn By	JAB
Checked By	PNE
Approved By	PNE
Filename	344TD06.DGN
Project No.	11715
Project Date	1/22/10

CITY OF BLOOMINGTON DEPT. OF PUBLIC WORKS
KIRKWOOD AVENUE STREETSCAPE PHASE III
COLLEGE AVENUE TO ROGERS STREET
BLOOMINGTON, INDIANA

CORNER PLANTER DETAILS

DONOHUE & ASSOCIATES

Sheet No. 34

Drawing No. M6

$DATE$ $TIME$

$FILE$

...\Projects\11715\Dwg\344td06.dgn 1/27/2010 3:53:51 PM

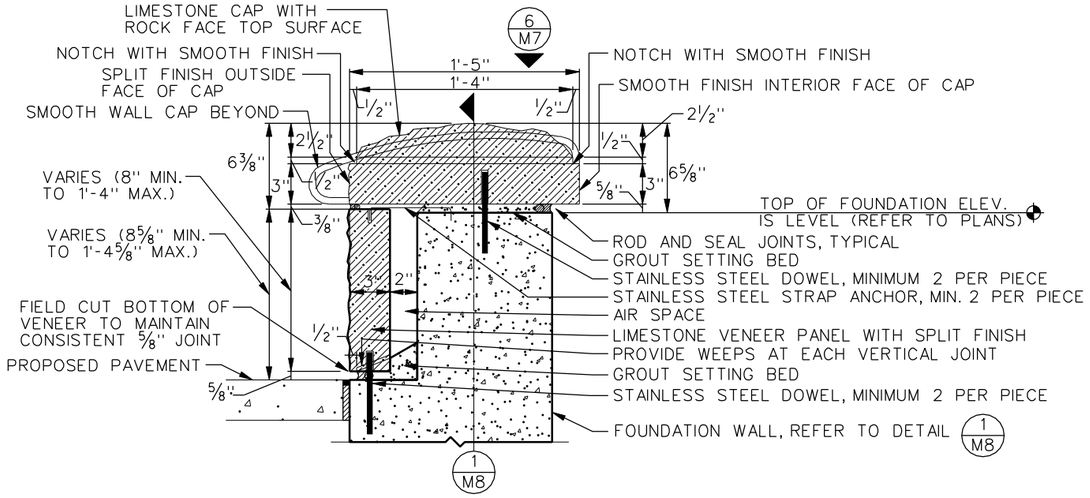

1/M7 LIMESTONE CAP AND VENEER SECTION

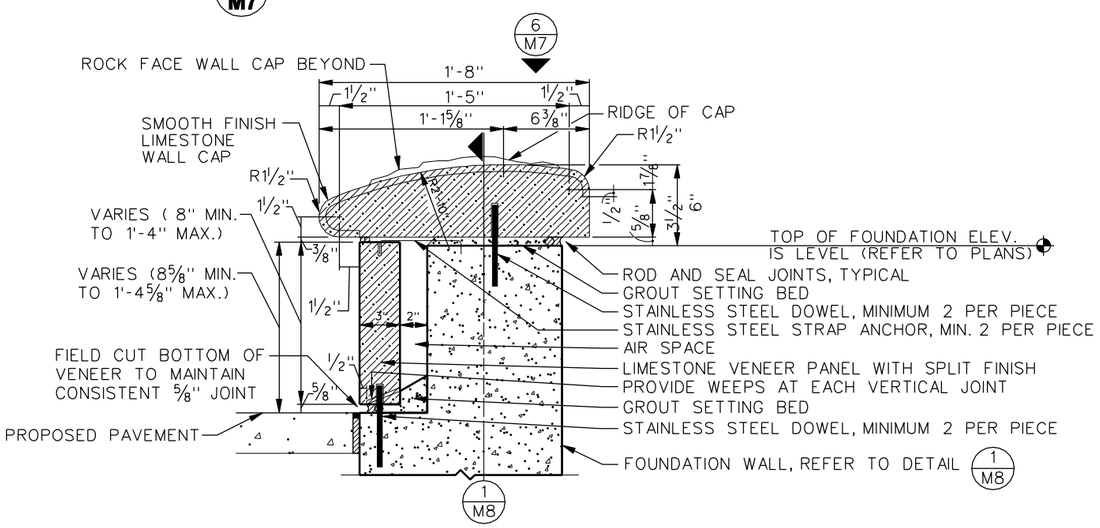

2/M7 LIMESTONE CAP AND VENEER SECTION

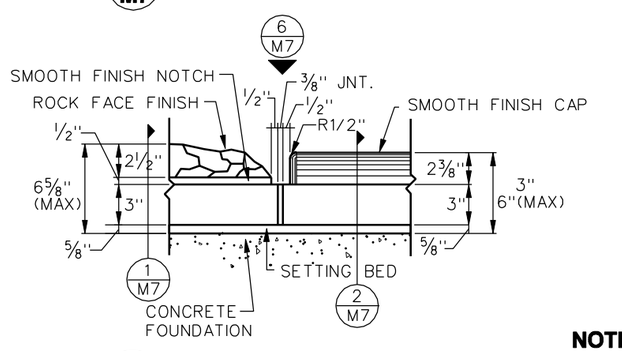

3/M7 ELEVATION OF WALL CAPS

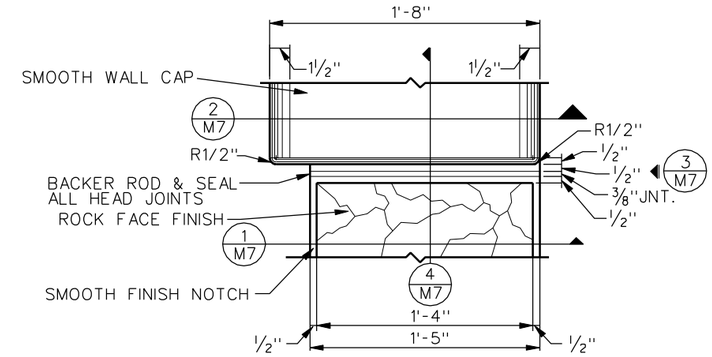

6/M7 PARTIAL PLAN OF WALL CAP JOINTING

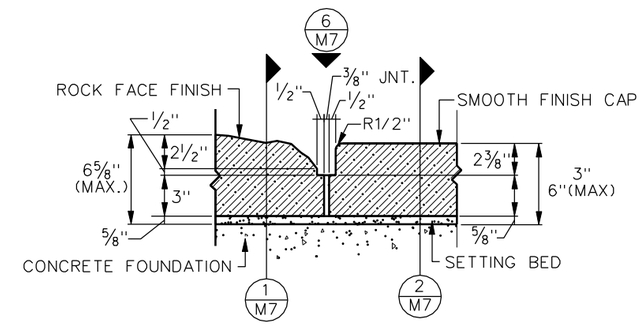

4/M7 SECTION THROUGH WALL CAPS

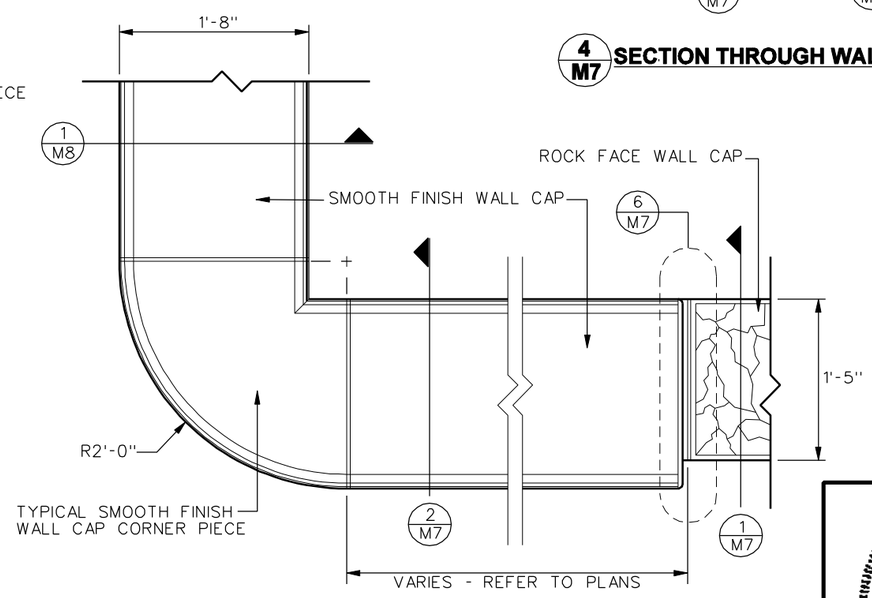

5/M7 PLAN OF WALL CAP TYPICAL CORNER PIECE

NOTE FOR ALL DETAILS THIS PAGE:

ALL EXPOSED STONE FACES ON SPECIALITY PLANTER TO HAVE GRAFFITI RESISTANT COATING APPLIED

PAUL N. ELLING REGISTERED NO. 890275 STATE OF INDIANA PROFESSIONAL ENGINEER

1-22-10

Revision Number	Revision Description	Drawn By	Checked By	Date

Designed By	JAB
Drawn By	JAB
Checked By	PNE
Approved By	PNE
Filename	344TD07.DGN
Project No.	11715
Project Date	1/22/10

CITY OF BLOOMINGTON DEPT. OF PUBLIC WORKS
KIRKWOOD AVENUE STREETSCAPE PHASE III
COLLEGE AVENUE TO ROGERS STREET
BLOOMINGTON, INDIANA

SPECIALTY PLANTER "A" DETAILS

DONOHUE & ASSOCIATES

Sheet No. 35

Drawing No. M7

$FILE$ $DATE$ $TIME$

...\Projects\11715\Dwg\344td07.dgn 1/27/2010 3:59:41 PM

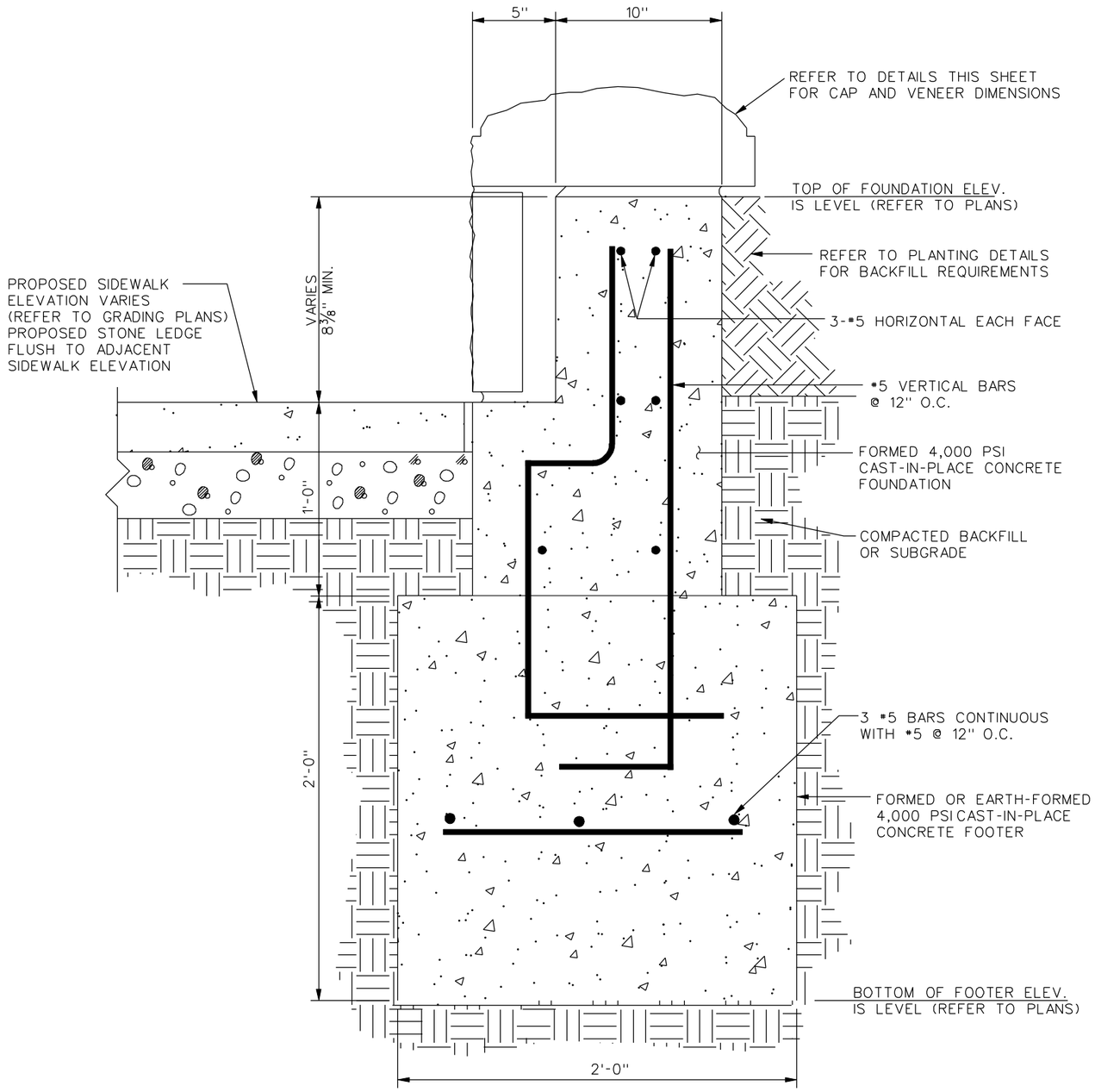

1 / M8 WALL FOOTING & FOUNDATION SECTION

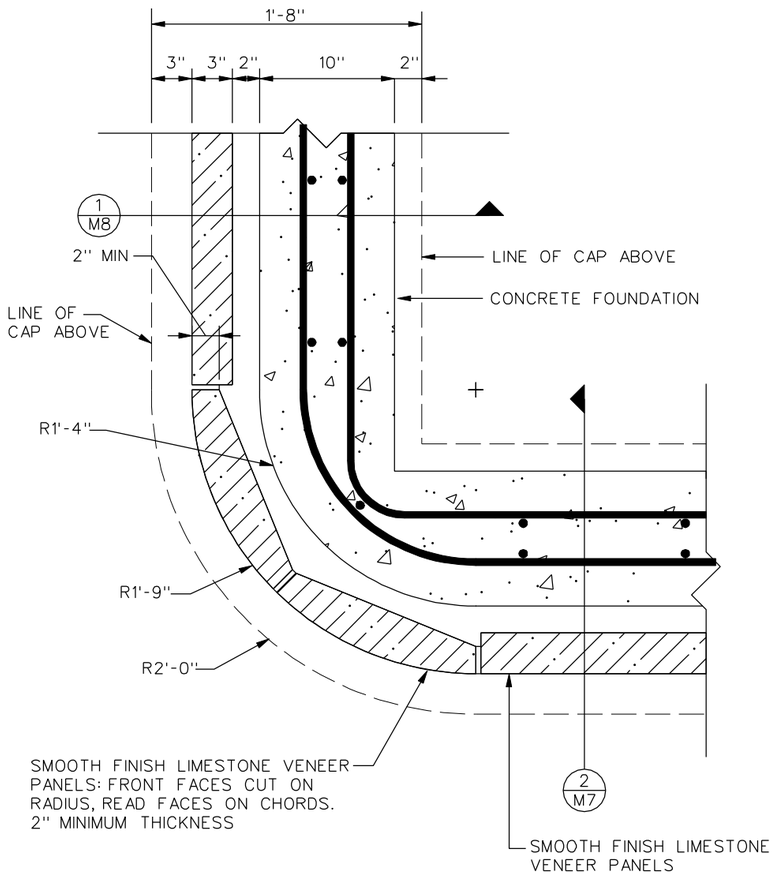

2 / M8 HORIZONTAL SECTION OF PLANTER CORNER CONDITION

PAUL N. ELLING REGISTERED NO. 890275 STATE OF INDIANA PROFESSIONAL ENGINEER

1-22-10

Revision Number	Revision Description	Drawn By	Checked By	Date

Designed By	JAB
Drawn By	JAB
Checked By	PNE
Approved By	PNE
Filename	344TD08.DGN
Project No.	11715
Project Date	1/22/10

CITY OF BLOOMINGTON DEPT. OF PUBLIC WORKS
KIRKWOOD AVENUE STREETSCAPE PHASE III
COLLEGE AVENUE TO ROGERS STREET
BLOOMINGTON, INDIANA

SPECIALTY PLANTER "A" DETAILS

DONOHUE & ASSOCIATES

Sheet No. 36

Drawing No. M8

$FILE$ $DATE$ $TIME$

...\Projects\11715\Dwg\344td08.dgn 1/21/2010 5:55:10 PM

STORM SEWER DETAILS

STR. NO.	INLET CASTING TYPE *A, *B	PIPE DIA. (IN)	PIPE LENGTH (FT)	PIPE TYPE	CASTING ELEV.	STR. INVERT	PIPE U.S. INV.*5	PIPE D.S. INV.*5	REMARKS
WEST OF CULVERT									
11	CATCH BASIN J-10	12	33	CLASS V RCP	768.75	761.50	764.00	763.67	
12	60" MANHOLE	24	114	CLASS I RCP	768.77	762.00	762.00	759.42	
13	CATCH BASIN J-10	12	48	CLASS V RCP	769.60	762.50	765.00	764.52	
14	CATCH BASIN J-10	12	41	CLASS V RCP	767.88	761.60	764.10	763.69	
15	CATCH BASIN J-10	12	14	CLASS V RCP	766.20	759.00	761.50	761.36	
16	72" MANHOLE	24	93	CLASS I RCP	766.00	759.72	759.72	757.84	
17	CATCH BASIN J-10	12	43	CLASS V RCP	765.24	758.50	761.00	760.57	
19	48" MANHOLE	24	89	CLASS I RCP	763.65	757.84	757.84	756.06	
20	48" MANHOLE	24	63	CLASS I RCP	761.55	756.06	756.06	754.80	
21	CATCH BASIN J-10	12	31	CLASS V RCP	761.45	755.06	757.56	757.25	
21A	CATCH BASIN J-10	12	54	CLASS V RCP	762.30	755.70	758.20	757.66	
22	CATCH BASIN J-10	12	10	CLASS V RCP	761.45	754.80	757.30	757.20	
23	CATCH BASIN J-10	12	39	CLASS V RCP	761.05	753.60	756.10	755.71	
24	CATCH BASIN J-10	15	35	CLASS V RCP	761.05	753.21	755.71	755.36	
25	48" MANHOLE	15	31	CLASS V RCP	760.00	755.36	755.36	755.05	
26	CATCH BASIN J-10	12	39	CLASS V RCP	760.29	753.80	755.80	755.42	
27	CATCH BASIN J-10	15	39	CLASS V RCP	760.29	752.82	755.32	754.84	
29	60" MANHOLE	30	101	CLASS I RCP	760.02	754.40	754.40	752.38	
31	CATCH BASIN J-10	12	33	CLASS V RCP	757.64	750.50	753.00	752.67	
31A	PIPE	2-6"	21	CLASS V RCP	EXIST	EXIST	EXIST	753.22	
33	60" MANHOLE	30	59	CLASS I RCP	758.05	752.08	752.08	750.90	
34	INLET C-15	12	23	CLASS V RCP	757.17	750.50	753.00	752.57	
35	CATCH BASIN A-2	12	5	CLASS V RCP	756.71	749.97	752.47	752.37	
EAST OF CULVERT									
37	CATCH BASIN A-2	12	6	CLASS V RCP	756.80	750.30	752.80	752.67	
38	CATCH BASIN J-10	12	18	CLASS V RCP	757.24	750.00	752.50	752.16	
39	CATCH BASIN A-2	12	14	CLASS V RCP	757.00	750.60	753.10	752.82	
40	CATCH BASIN J-10	15	44	CLASS V RCP	757.40	750.78	753.28	752.84	
41	72" MANHOLE	42	41	CLASS I RCP	757.40	750.93	750.93	750.88	
42	72" MANHOLE	42	36	CLASS I RCP	757.61	751.16	751.16	750.98	
43	CATCH BASIN J-10	12	62	CLASS V RCP	757.91	751.50	754.00	753.38	
44	72" MANHOLE	42	62	CLASS I RCP	758.20	751.62	751.62	751.31	
45	96" MANHOLE	42	58	CLASS I RCP	759.10	752.11	752.11	751.82	
47	CATCH BASIN R-13	18	40	CLASS I RCP	758.80	754.30	754.30	753.90	
47A	CATCH BASIN A-2	15	130	CLASS V RCP	759.85	754.20	756.70	755.40	
48	CATCH BASIN J-10	18	34	CLASS I RCP	758.70	753.80	753.80	753.46	
49	72" MANHOLE	36	38	CLASS I RCP	758.95	752.35	752.35	752.16	
50	CATCH BASIN J-10	12	23	CLASS V RCP	760.30	754.20	756.70	756.47	
51	60" MANHOLE	30	100	CLASS I RCP	760.60	754.65	754.65	752.35	
52	48" MANHOLE	12	18	CLASS V RCP	759.75	756.25	756.25	756.07	
52A	PIPE	12	50	CLASS V RCP	EXIST	EXIST	EXIST	758.00	
53	60" MANHOLE	30	42	CLASS I RCP	762.45	755.71	755.71	754.75	
54	CATCH BASIN J-10	12	31	CLASS V RCP	762.83	755.80	758.30	757.99	
55	CATCH BASIN J-10	12	17	CLASS V RCP	762.62	755.00	757.50	757.33	

STORM SEWER DETAILS

STR. NO.	INLET CASTING TYPE *A, *B	PIPE DIA. (IN)	PIPE LENGTH (FT)	PIPE TYPE	CASTING ELEV.	STR. INVERT	PIPE U.S. INV.*5	PIPE D.S. INV.*5	REMARKS
56	60" MANHOLE	30	106	CLASS I RCP	769.50	759.00	759.00	756.56	
57	CATCH BASIN J-10	12	28	CLASS V RCP	768.90	762.40	764.90	764.62	
58	CATCH BASIN J-10	12	15	CLASS V RCP	770.90	762.50	765.00	764.85	
59	CATCH BASIN J-10	15	56	CLASS V RCP	771.00	762.26	764.75	764.19	

NOTES:

1. CATCH BASIN TYPES LISTED ARE AS SPECIFIED IN THE INDIANA DEPARTMENT OF TRANSPORTATION STANDARD SPECIFICATIONS.
2. NEW STORM MANHOLES SHALL BE AS SPECIFIED IN THE CBU'S CONSTRUCTION SPECIFICATIONS.
3. STRUCTURE NUMBERS INCLUDE THE MANHOLE STRUCTURE AND THE DOWN STREAM PIPE SEGMENT. (UNLESS NOTED OTHERWISE)
4. PVC SANITARY SEWER PIPE TYPE USED HERE IS DEFINED AS: D-3034 MEANS PVC ASTM D-3034
5. ALL SANITARY SEWER LATERALS (WHICH ARE SHOWN IN THE PLANS, BUT NOT LISTED HERE) SHALL BE 6" PVC ASTM D-3034.
6. PIPE INVERTS LISTED ARE TO CENTER OF RESPECTIVE STRUCTURE. SLOPES ARE TO BE MAINTAINED THROUGH STRUCTURES.
7. ALL STORM MANHOLES REQUIRE FULL BENCHING PER CONSTRUCTION SPECIFICATIONS.

PAUL N. ELLING
REGISTERED
NO.
890275
STATE OF
INDIANA
PROFESSIONAL ENGINEER

1-22-10

Revision Number	Revision Description	Drawn By	Checked By	Date

Designed By	JAB
Drawn By	JAB
Checked By	PNE
Approved By	PE
Filename	344TD09.DGN
Project No.	11715
Project Date	1/22/10

CITY OF BLOOMINGTON DEPT. OF PUBLIC WORKS
KIRKWOOD AVENUE STREETSCAPE PHASE III
COLLEGE AVENUE TO ROGERS STREET
BLOOMINGTON, INDIANA

STORM SEWER DETAILS

DONOHUE & ASSOCIATES

Sheet No. 37

Drawing No. M9

$FILE$ $DATE$ $TIME$

...\Projects\11715\Dwg\344td09.dgn 1/21/2010 6:01:41 PM

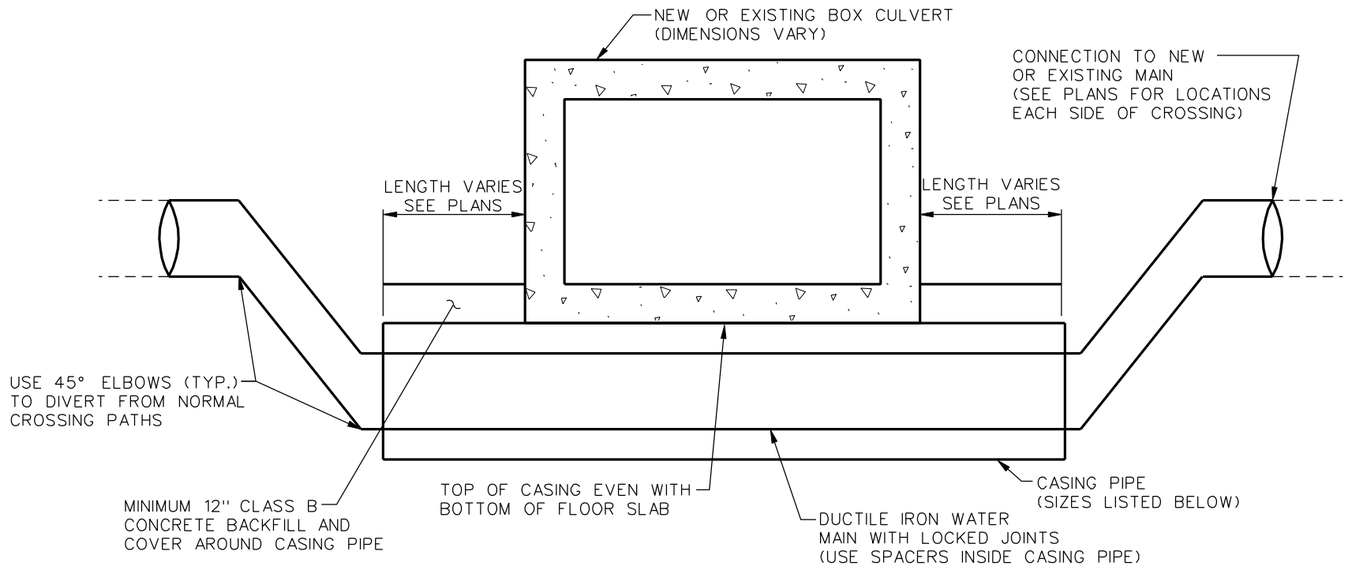

WATER MAIN MATERIAL
All Water Mains Shall Be Ductile Iron Pipe With Restrained Joints.

WATERMAIN CROSSING LAYOUT

NOT TO SCALE

THIS DETAIL APPLIES TO RELOCATED WATER MAIN CROSSINGS UNDER BOX CULVERTS. SIZES OF MAINS AND CASINGS ARE AS FOLLOWS:

- 8" CLASS 350 DIP WATERMAIN IN 20' OF 20" STEEL CASING PIPE (STA. 57+43)

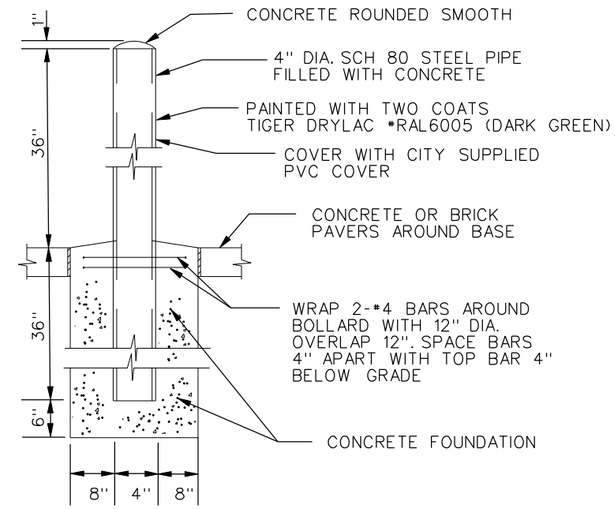

BOLLARD DETAIL

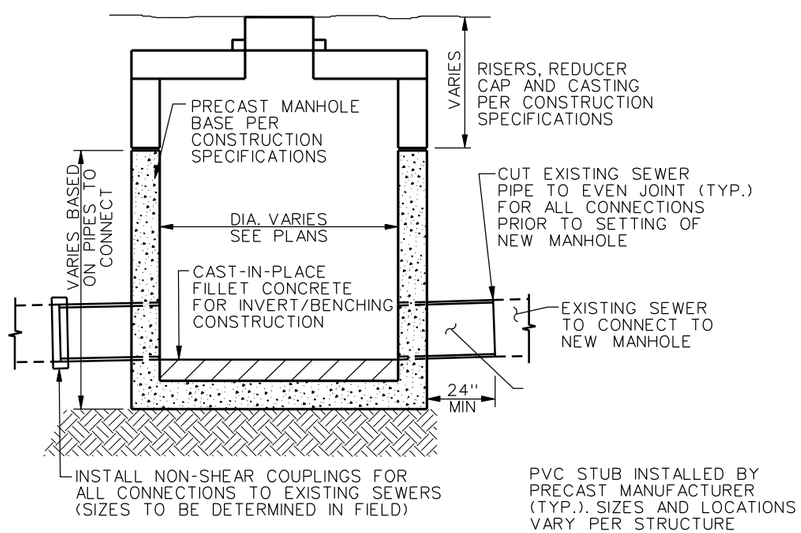

INSTALLATION OF NEW MANHOLES OVER EXISTING SEWERS

NO SCALE

NOTES:
1. CONTRACTOR IS RESPONSIBLE FOR ANY BYPASS PUMPING REQUIRED.
2. CONTRACTOR TO FIELD VERIFY EXISTING GRADES, CONNECTION SIZES, EXISTING PIPE INVERTS AND EXISTING PIPE MATERIALS PRIOR TO ORDERING PRECAST STRUCTURE.
3. CONTRACTOR TO PROVIDE CBU APPROVED NON-SHEAR COUPLINGS OR OTHER ACCEPTABLE PIPE CONNECTIONS FOR SIMILAR OR NON SIMILAR PIPE MATERIALS.
4. PRE-INSTALLED SEWER PIPE STUBS TO BE ASTM D-3034 OR ASTM F679 AS APPLICABLE.

WATER MAIN RELOCATION NOTES
1. All Work And Materials Shall Be In Accordance With the Construction Specifications, Except That All Mechanically Restrained Joints And Fittings Must Be "Megalug" Restraints Only. No Uniflange Joints Or Fitting Restraints Are Allowed.
2. All Joints Within The Relocated Water Line Shall Be Restrained Against Thrust Forces By Mechanical Devices Manufactured By EBBA Iron, "Megalug" or equal.
3. The Relocated Main Shall Pass Testing Procedures For Pressure, Leakage, And Purification In Accordance With CBU Specifications.
4. Corporation Taps Necessary For Filling, Blowoff And Testing Of New Main Shall Be Done By CBU On Existing Main And By Contractor On Relocated Main.
5. Line Stops To Be Installed By Contractor And Coordinated With CBU. The Location Of Line Stops To Be Determined By CBU And The Contractor In The Field. The Line Stops Are Intended To Be In Place Only During Connection Of the Relocated Main To The Existing Main.
6. Existing Pipe To Remain In Service Until Relocated Main Is Put In Service.
7. Connection Parts Between Relocated Main And Existing Main To Be Fully Assembled And Prepared By Swabbing With A Bleach Solution And Air Tested (If Possible) Prior To Cutting The Existing Main.
8. Contractor To Coordinate Service Outages With CBU And Any Customers That May Be Affected. Contractor To Work During Non-Operating Hours Or Provide Temporary Water Service To Customers As Required.
9. See Plans For Locations Of Gate Valves And Line Stops To Facilitate This Work.

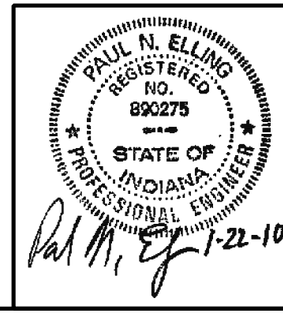

Revision Number	Revision Description	Drawn By	Checked By	Date

Designed By	JAB
Drawn By	JAB
Checked By	PNE
Approved By	PNE
Filename	344TD10.DGN
Project No.	11715
Project Date	1/22/10

CITY OF BLOOMINGTON DEPT. OF PUBLIC WORKS
KIRKWOOD AVENUE STREETSCAPE PHASE III
COLLEGE AVENUE TO ROGERS STREET
BLOOMINGTON, INDIANA

WATERMAIN CROSSING LAYOUT & MISCELLANEOUS. DETAILS

DONOHUE & ASSOCIATES

Sheet No. 38

Drawing No. M10

$FILE$ $DATE$ $TIME$

...\Projects\11715\Dwg\344td10.dgn 1/22/2010 11:31:53 AM

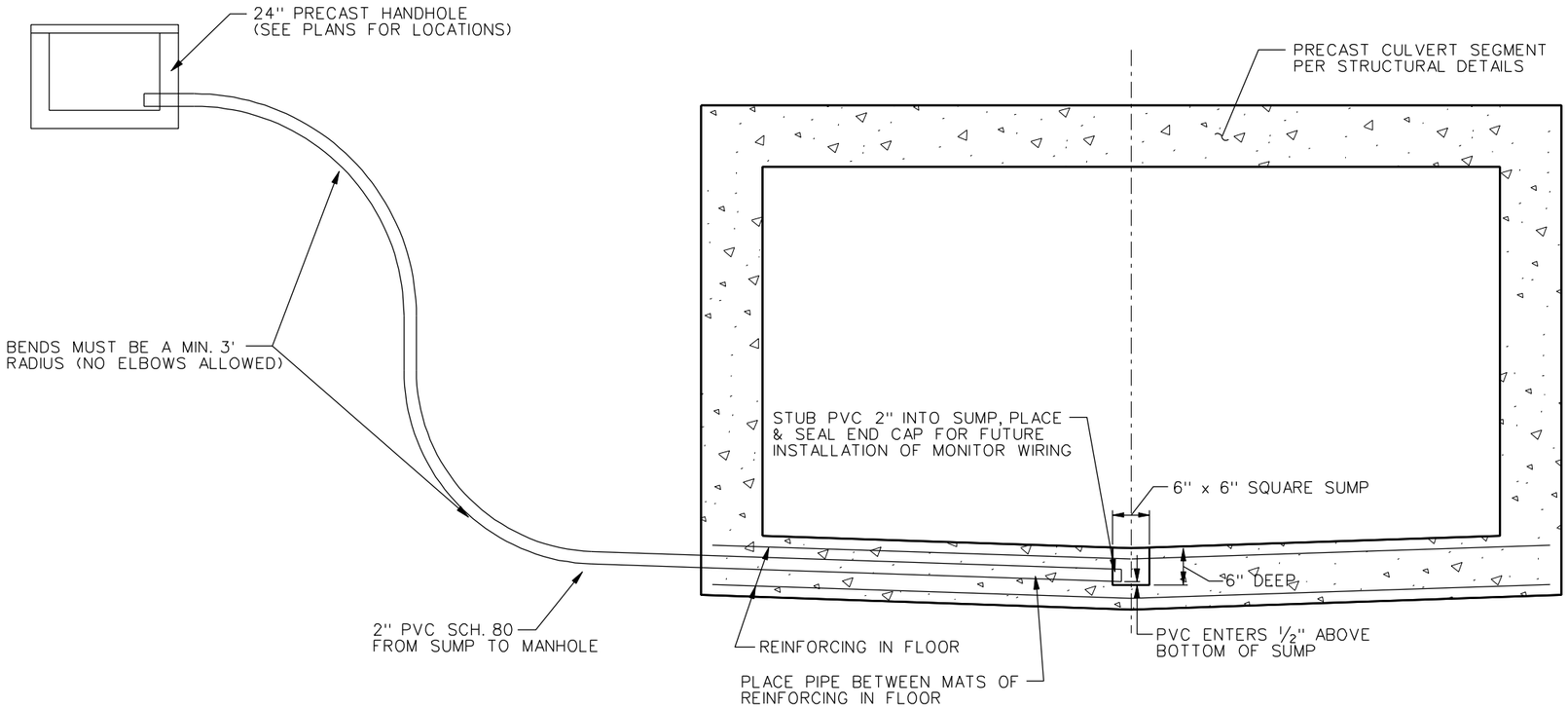

ELEVATION

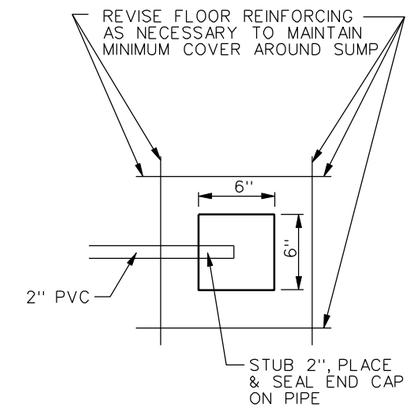

PLAN

FLOW MONITORING STATION LAYOUT

NO SCALE

COORDINATION WITH PRECAST CULVERT

CONTRACTOR SHALL COORDINATE THE REQUIREMENTS OF THIS SHEET WITH THE STRUCTURAL DETAILS TO ENSURE THAT FLOW MONITOR SUMP & CONDUIT IS INSTALLED IN PRECAST SECTION AND PLACED WITHIN 5'+/- OF LOCATION SHOWN ON THE PLANS.

PAUL N. ELLING
REGISTERED
NO.
890275
STATE OF
INDIANA
PROFESSIONAL ENGINEER

1-22-10

Revision Number	Revision Description	Drawn By	Checked By	Date

Designed By	JAB
Drawn By	JAB
Checked By	PNE
Approved By	PNE
Filename	344TD11.DGN
Project No.	11715
Project Date	1/22/10

CITY OF BLOOMINGTON DEPT. OF PUBLIC WORKS
KIRKWOOD AVENUE STREETSCAPE PHASE III
COLLEGE AVENUE TO ROGERS STREET
BLOOMINGTON, INDIANA

FLOW MONITORING STATION DETAILS

DONOHUE & ASSOCIATES

Sheet No. 39

Drawing No. M11

$FILE$ $DATE$ $TIME$

...\Projects\11715\Dwg\344td11.dgn 1/21/2010 6:05:06 PM

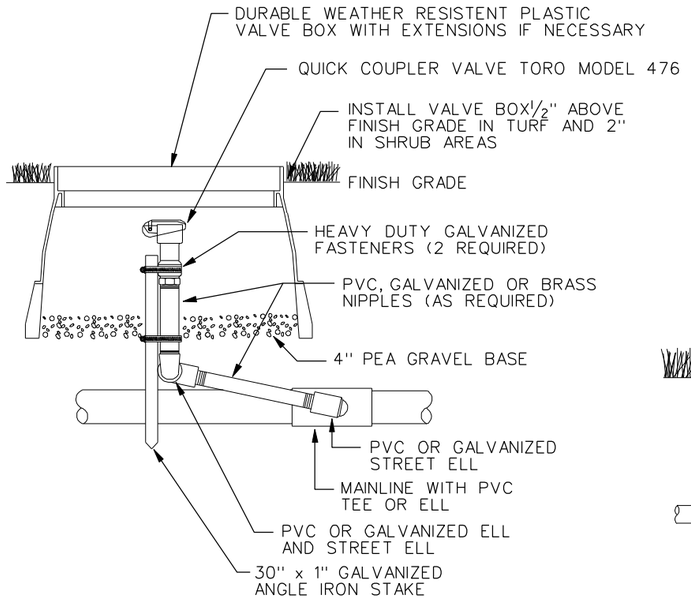

QUICK COUPLER VALVE
NO SCALE

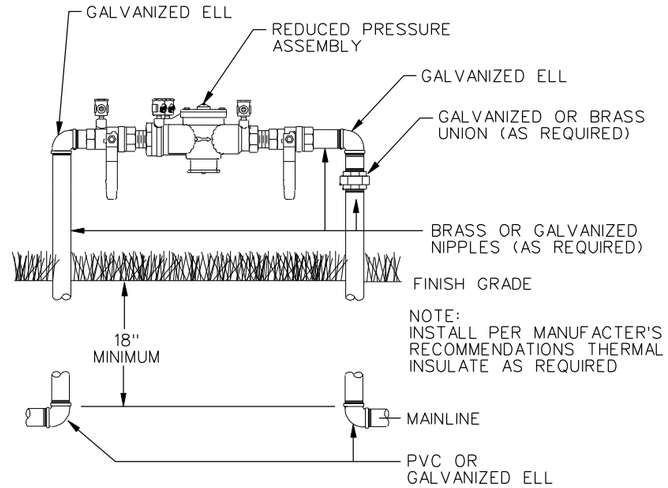

REDUCED PRESSURE ASSEMBLY FOR BACK-FLOW PREVENTION
NO SCALE

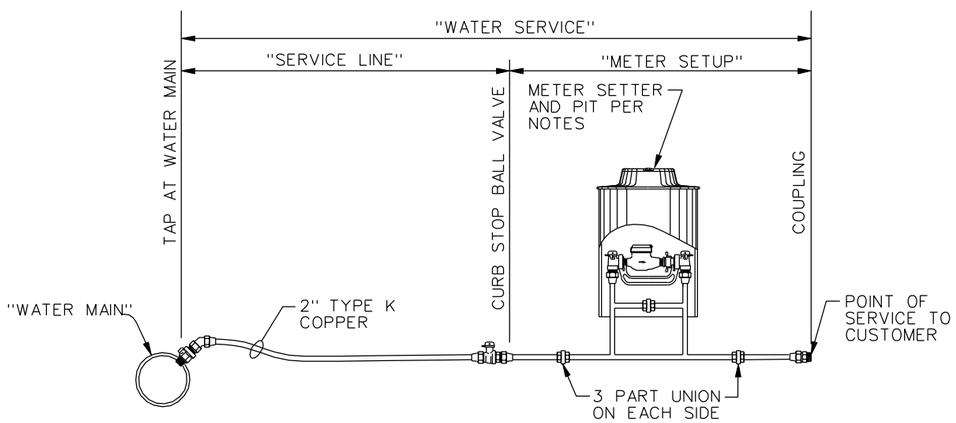

WATER SERVICE, 2" NOMENCLATURE
NO SCALE

NOTE: CONTRACTOR RESPONSIBLE FOR INSTALLATION OF WATER SERVICE AS SHOWN ABOVE

SEE PLANS FOR METER PIT LOCATIONS
"◒" - METER SYMBOL

METER SETTER / PIT NOTES

1. METER SETTER SHALL COMPLY WITH CITY OF BLOOMINGTON UTILITY SPECIFICATIONS FOR 2" WATER SERVICE.
2. TOP OF YOKE TO BE SET MIN 18" AND MAX 24" BELOW SURFACE GRADE.
3. METER PITS BY WATERWORKS 30"x30" PLASTIC WITH (CBU IIJ-7) EXTENSION RING 20"x30" (FORD FL-30) AND (CBU IIJ-109) ROUND PIT RING AND #10 LID (FORD #10 LID AND RING) ALL METER LIDS TO BE 20" IN DIAMETER.
4. CBU TO INSTALL METER ONCE SETTER AND PIT ARE INSTALLED BY CONTRACTOR.

NOTES:

1. THE IRRIGATION SYSTEM DESIGN IS BASED ON A MINIMUM OPERATING PRESSURE OF 65 PSI, @ THE POINT OF CONNECTION. THE IRRIGATION CONTRACTOR SHALL VERIFY WATER PRESSURE PRIOR TO CONSTRUCTION. REPORT DIFFERENCES BETWEEN REQUIREMENTS AND ACTUAL READINGS TO THE OWNER'S AUTHORIZED REPRESENTATIVE.
2. INSTALL ALL BACKFLOW PREVENTION DEVICES AND ALL PIPING BETWEEN THE POINT OF CONNECTION AND THE BACKFLOW PREVENTER AS PER LOCAL CODES.
3. FINAL LOCATION OF THE BACKFLOW PREVENTER SHALL BE APPROVED BY THE OWNER'S AUTHORIZED REPRESENTATIVE PER LOCAL CODES.
4. A BLOW-OUT VALVE SHALL BE LOCATED AT THE IRRIGATION WATER SUPPLY POINT OF CONNECTION TO PROVIDE FOR A POINT OF INJECTION OF COMPRESSED AIR TO PURGE THE SYSTEM OF RETAINED WATER FOR WINTERIZATION.
5. QUICK COUPLING VALVES SHALL BE MOUNTED ON A 1" LASCO BRASS INSERT SWING JOINT WITH STABILIZING ELBOW.
6. ALL MAINLINE PIPING UNDER ROAD PAVING SHALL BE INSTALLED IN SEPARATE SLEEVES (MIN. SDR 26 PVC) . ONLY PIPING IN PLANTERS AND UNDER SIDEWALKS MAY BE UNSLEEVED. SLEEVES SHALL BE A MINIMUM OF TWICE (2X) THE OUTSIDE DIAMETER OF THE PIPE TO BE SLEEVED.
7. PIPE SIZE SHALL CONFORM TO THOSE SHOWN ON DRAWINGS. NO SUBSTITUTIONS OF SMALLER PIPE SIZES SHALL BE PERMITTED. SUBSTITUTIONS OF LARGER SIZES MAY BE APPROVED. MINIMUM PIPE SHALL BE 1".
8. ALL LATERAL PIPE (2" AND SMALLER) SHALL BE PULLED WITH A VIBRATORY PLOW. THE SILTDOME SHALL BE COMPACTED TO ITS ORIGINAL GRADE.
9. ALL MAINLINE PIPING SHALL BE INSTALLED WITH A MINIMUM OF 18" COVER.
10. ALL PIPES AND FITTINGS SHALL BE SCHEDULE 40 PVC.
11. ALL QUICK COUPLERS SHALL BE INSTALLED IN LOCKABLE VALVE BOXES.
12. THE IRRIGATION CONTRACTOR SHALL WARRANTY THE SYSTEM FOR ONE FULL YEAR FROM THE DATE OF ACCEPTANCE AND PROVIDE FOR THE WINTERIZATION AND NEXT YEAR START-UP.
13. THE IRRIGATION CONTRACTOR SHALL CONDUCT A TRAINING SESSION WITH THE OWNER'S REPRESENTATIVE TO DEMONSTRATE THE OPERATION OF THE SYSTEM.
14. THE IRRIGATION CONTRACTOR SHALL PROVIDE 'AS-BUILT' DRAWINGS OF THE INSTALLATION TO THE OWNER ON REPRODUCIBLE VELLUM AT THE SCALE OF THE ORIGINAL CONSTRUCTION DOCUMENT.
15. REFER TO THE SPECIFICATIONS FOR ADDITIONAL DETAILED INFORMATION.

PAUL N. ELLING
REGISTERED NO. 890275
STATE OF INDIANA
PROFESSIONAL ENGINEER
1-22-10

Revision Number	Revision Description	Drawn By	Checked By	Date

Designed By	JAB
Drawn By	JAB
Checked By	PNE
Approved By	PNE
Filename	344TD12.DGN
Project No.	11715
Project Date	1/22/10

CITY OF BLOOMINGTON DEPT. OF PUBLIC WORKS
KIRKWOOD AVENUE STREETSCAPE PHASE III
COLLEGE AVENUE TO ROGERS STREET
BLOOMINGTON, INDIANA

WATER SERVICE & IRRIGATION SYSTEM DETAILS

DONOHUE & ASSOCIATES

Sheet No. 40

Drawing No. M12

$FILE$ $DATE$ $TIME$

...\Projects\11715\Dwg\344td12.dgn 1/21/2010 6:07:55 PM

NOTE:
REMOVE EXISTING SERVICE EQUIPMENT ON POLE AS REQUIRED.

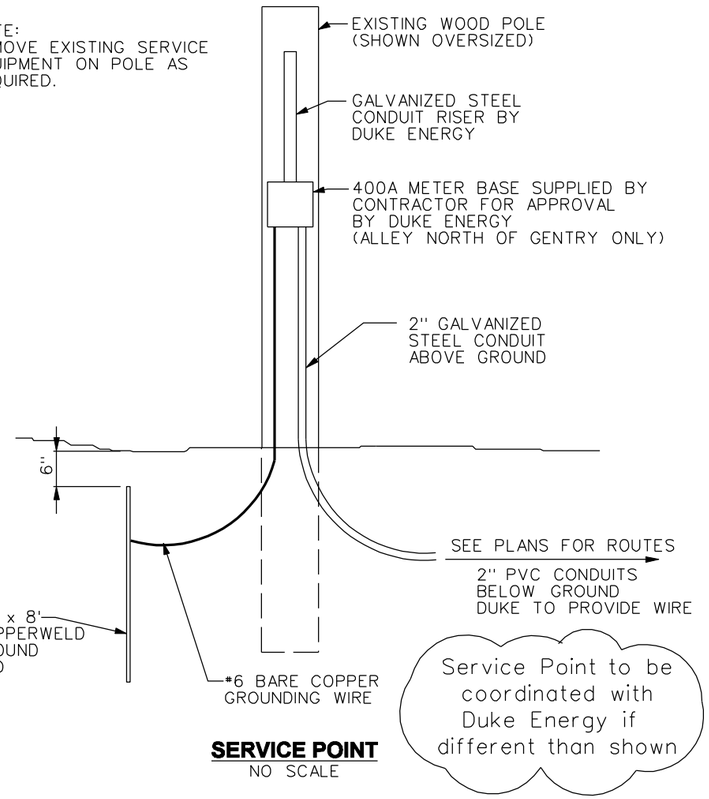

SERVICE POINT
NO SCALE

ELECTRIC CABINETS

CABINETS SHALL BE NEMA 4X STAINLESS STEEL METAL ENCLOSURES MOUNTED ON 12" HIGH CONCRETE BASE. CONDUITS SHALL INSTALLED UP THROUGH CONCRETE BASE AND ADDITIONAL 2" CONDUITS SHALL BE STUBBED UP INSIDE CONCRETE BASE FOR ALL UNUSED CIRCUITS. ENCLOSURE DIMENSIONS SHALL BE 24" HIGH, 20" WIDE AND 12" DEEP. CONTACT THE ENGINEER FOR APPROVAL IF THE DIMENSIONS OF THE ENCLOSURE REQUIRE REVISIONS. THE MAIN CIRCUIT BREAKER SHALL BE 400 AMP. ALL OTHER CIRCUIT BREAKERS SHALL BE OF THE SIZES SHOWN AND BE GFCI RATED. SPACE FOR ADDITIONAL SPARE CIRCUITS AS SHOWN ON THE LISTING SHALL BE PROVIDED. ENCLOSURE DOOR SHALL BE HINGED WITH A HANDLE OPERATOR AND A KEY LOCKING LATCH. NEMA 5-50 AMP RECEPTACLES SHALL BE ACCESSIBLE FROM THE EXTERIOR AND HAVE INDIVIDUAL LOCKING WEATHERPROOF COVERS. THE ENCLOSURE AT MADISON STREET SHALL HAVE A 400 AMP METER BASE MOUNTED ON THE EXTERIOR BACK SUCH THAT IT CAN BE READ WITHOUT OPENING CABINET.

LIGHTING REMOVAL CONTINUITY:

CONTRACTOR TO COORDINATE WITH DUKE ENERGY TO HAVE EXISTING LIGHTS REMOVED AT APPROPRIATE TIME FOR EACH BLOCK. LIGHTING SHALL BE RESTORED PRIOR TO COMPLETING WORK FOR EACH BLOCK WITHIN THE TIME PERMITTED.

COMMUNICATIONS CONDUIT:

CONTRACTOR TO INSTALL 2ea 4" PVC Sch. 80 CONDUITS AT THE LOCATIONS SHOWN. THESE CONDUITS WILL BE LEFT VACANT EXCEPT FOR A PULL CORD TO BE INSTALLED CONDUIT ENDS IN HANDHOLES SHALL BE CAPPED TO BE WATERTIGHT UNTIL USED IN THE FUTURE. COMMUNICATION CONDUIT SHALL BE PLACED WITH BENDS OF A MINIMUM 36" RADIUS. (NO ELBOWS ALLOWED)

COMMUNICATION HANDHOLES:

HANDHOLES SHALL BE BY HARTFORD CONCRETE PRODUCTS, TYPE "M" (4"x4"x2" INTERIOR DIMENSIONS) WITH 30" CASTING AND LID STAMPED "COMMUNICATIONS".

MADISON - SERVICE POINT CIRCUIT LIST

CIRCUIT	VOLTS	AMP RATING	WIRES	LOAD
1. FESTIVAL POWER	120	50	3#6	50A NEMA 5-50 PLUG
2. FESTIVAL POWER	120	50	3#6	50A NEMA 5-50 PLUG
3. LIGHTS - ROGERS TO MADISON (NORTHSIDE)	120	20	3#6	2 LIGHTS 2 DUPLEX OUTLETS
4. LIGHTS - ROGERS TO MADISON (SOUTHSIDE)	120	20	3#4	3 LIGHTS 3 DUPLEX OUTLETS
5. PENDANT LIGHTS AT MADISON	120	20	3#12	4 LIGHTS
6. LIGHTS - EAST OF MADISON (SOUTHSIDE) KIRKWOOD BLDG.	120	20	3#6	3 LIGHTS 3 DUPLEX OUTLETS
7. LIGHTS - EAST OF MADISON (2 NORTHSIDE)	120	20	3#4	2 LIGHTS 2 DUPLEX OUTLETS
8. LIGHTS - EAST OF MADISON (NORTHSIDE 1 SOUTHSIDE)	120	20	3#4	2 LIGHTS 2 DUPLEX OUTLETS
9. SPARE	120	20		
10. SPARE	120	20		

ALLEY N. OF GENTRY - SERVICE POINT CIRCUIT LIST

CIRCUIT	VOLTS	AMP RATING	WIRE	LOAD
1. FESTIVAL POWER	120	50	3#6	50A NEMA 5-50 PLUG
2. FESTIVAL POWER	120	50	3#6	50A NEMA 5-50 PLUG
3. LIGHT - BETWEEN COLLEGE AND GENTRY (SOUTHSIDE)	120	20	3#12	1 LIGHT 1 DUPLEX OUTLET
4. LIGHT - AT GENTRY (SOUTHSIDE)	120	20	3#12	1 LIGHT 1 DUPLEX OUTLET
5. LIGHT - NEAR MORTON (NORTHSIDE)	120	20	3#10	1 LIGHT 1 DUPLEX OUTLET
6. LIGHTS - AT ALLEY AND COLLEGE (NORTHSIDE)	120	20	3#10	2 LIGHTS 2 DUPLEX OUTLETS
7. FUTURE PENDANT LIGHTS AT COLLEGE	120	20		
8. SPARE	120	20		
9. SPARE	120	20		
10. SPARE	120	20		

SERVICE POINT NOTES:

1. CONTRACTOR SHALL PROVIDE NECESSARY MATERIALS FOR MOUNTING ELECTRICAL EQUIPMENT TO EXISTING WOOD POLE.
2. THIS DETAIL FOR CONCEPTUAL USE ONLY. CONTRACTOR SHALL COORDINATE THE REQUIREMENTS IN THESE PLANS AND SPECIFICATIONS WITH THE EQUIPMENT THEY INTEND TO USE AND ARE TO SUBMIT A SERVICE POINT LAYOUT DRAWING FOR REVIEW BY DUKE ENERGY.

CONDUIT INSTALLATION NOTES:

1. ALL CONDUITS ARE TO BE 2" PVC Sch. 80.
2. SEE PLANS FOR LOCATIONS OF CONDUIT.
3. COMMUNICATION CONDUITS (2x4" PVC Sch. 80) SHOWN ARE TO BYPASS ALL STREET LIGHT POSTS WITHOUT INTERRUPTIONS/BREAKS.
4. ALL VACANT CONDUITS SHALL HAVE A PULL CORD INSTALLED.

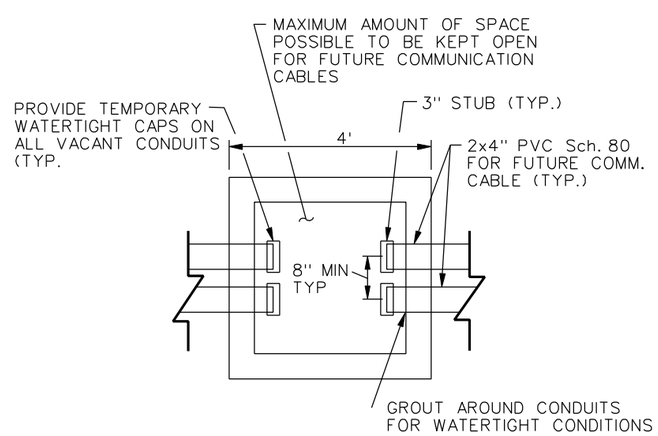

CABLE PLACEMENT IN COMMUNICATION HANDHOLES
NO SCALE

NOTES:
1. EACH LIGHT POLE TO HAVE AN INDEPENDENT PHOTOCELL AND EACH LAMP TO BE INDIVIDUALLY FUSED.
2. ALL WIRE SHALL BE CONDUCTOR TYPE XHHW-2
3. ALL LIGHTS ARE 66 WATT EXCEPT FOR CIRCUIT #6 ON THE MADISON SERVICE POINT ENCLOSURE WHICH ARE 35 WATT.
4. INCOMING POWER TO ENCLOSURES SHALL BE 120V.

PAUL N. ELLING REGISTERED NO. 890275 STATE OF INDIANA PROFESSIONAL ENGINEER
1-22-10

Revision Number	Revision Description	Drawn By	Checked By	Date

Designed By	JAB
Drawn By	JAB
Checked By	TJM
Approved By	PNE
Filename	344TD13.DGN
Project No.	11715
Project Date	1/22/10

CITY OF BLOOMINGTON DEPT. OF PUBLIC WORKS
KIRKWOOD AVENUE STREETSCAPE PHASE III
COLLEGE AVENUE TO ROGERS STREET
BLOOMINGTON, INDIANA

MISC. ELECTRIC DETAILS

DONOHUE & ASSOCIATES

Sheet No. 41
Drawing No. M13

$TIME$ $DATE$ $FILE$

...\Projects\11715\Dwg\344td13.dgn 1/21/2010 6:09:09 PM

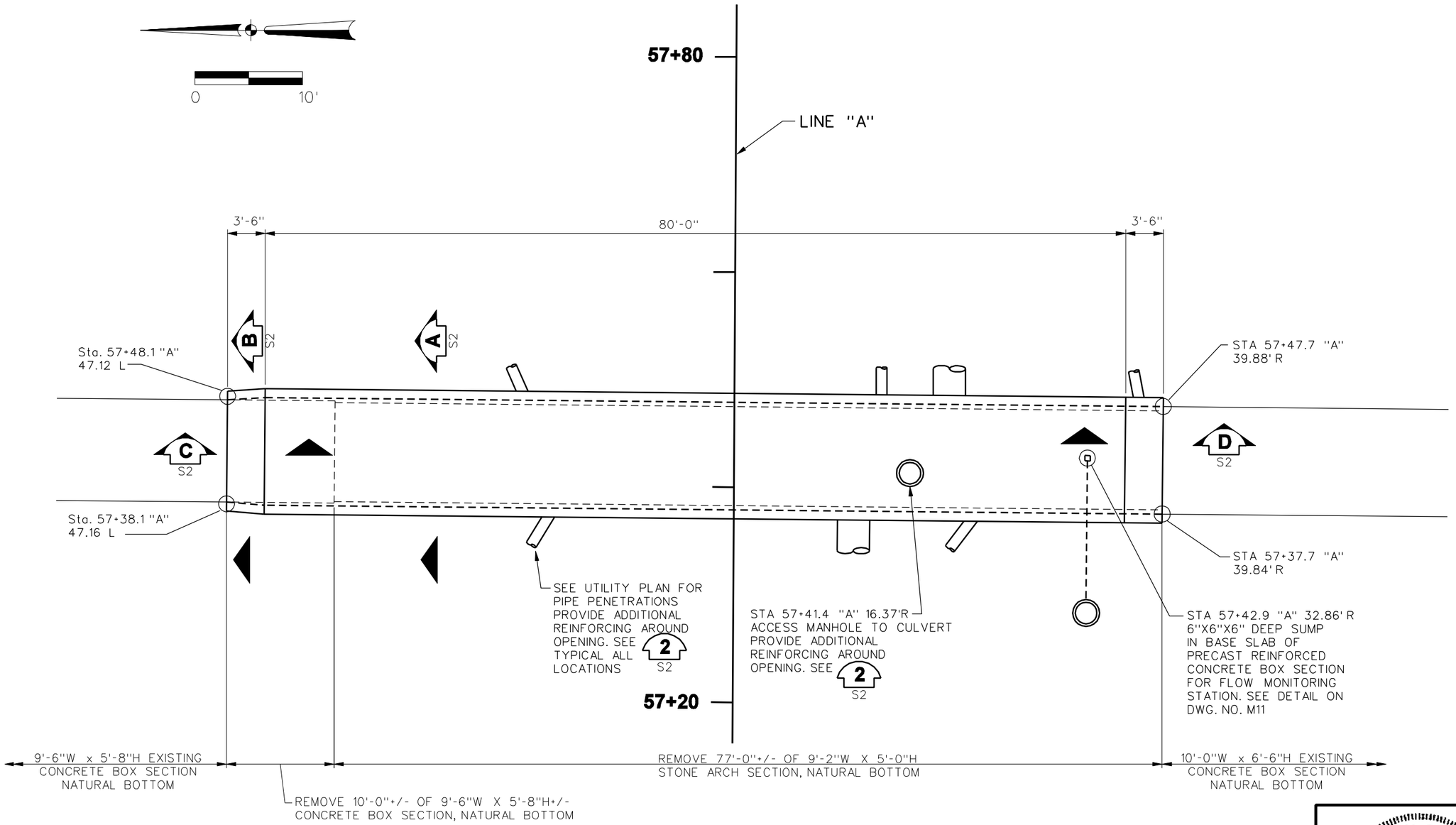

PAUL N. ELLING
REGISTERED
NO.
890275
STATE OF
INDIANA
PROFESSIONAL ENGINEER

1-22-10

Revision Number	Revision Description	Drawn By	Checked By	Date

Designed By	TWO
Drawn By	TWO
Checked By	PJE
Approved By	PNE
Filename	344TS01.DGN
Project No.	11715
Project Date	1/22/10

CITY OF BLOOMINGTON DEPT. OF PUBLIC WORKS
KIRKWOOD AVENUE STREETSCAPE PHASE III
COLLEGE AVENUE TO ROGERS STREET
BLOOMINGTON, INDIANA

STRUCTURAL DETAILS

DONOHUE & ASSOCIATES

Sheet No. 42

Drawing No. S1

$FILE$ $DATE$ $TIME$

...\Projects\11715\Dwg\344ts01.dgn 1/21/2010 6:11:09 PM

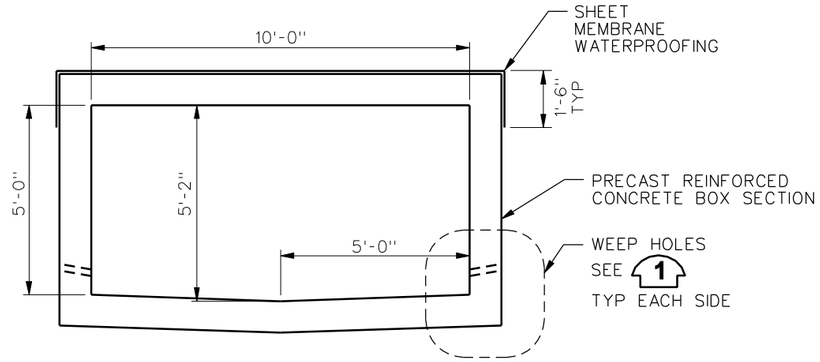

SECTION A

0 1' 2'

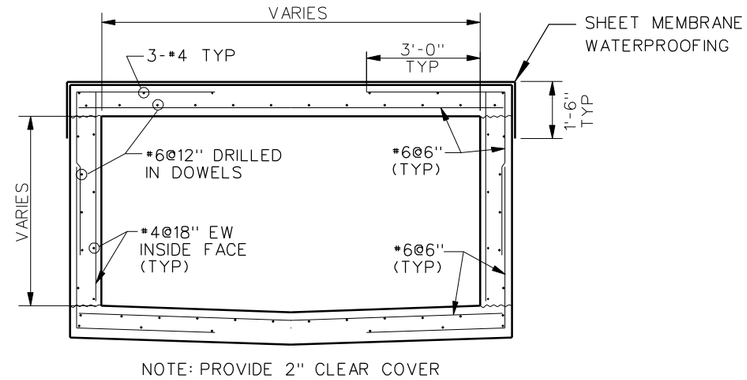

SECTION B

0 1' 2'

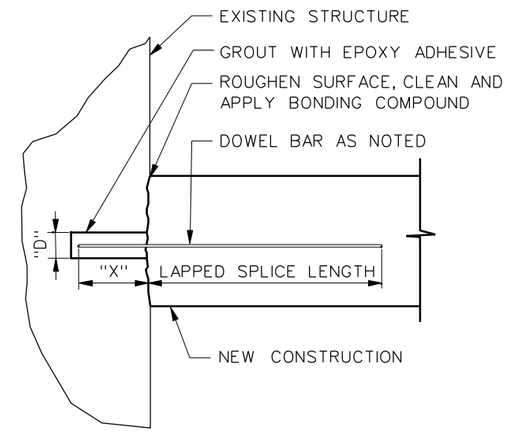

NOTES:

1. EMBEDMENT "X"=16 BAR DIAMETERS MIN.
2. HOLE DIAMETER "D"=2 BAR DIAMETERS MAX.

DRILLED IN DOWEL DETAIL 3

NTS

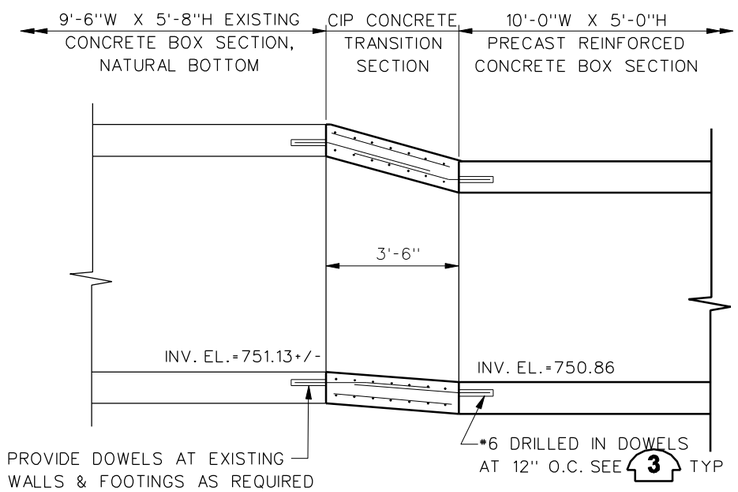

SECTION C

0 1' 2'

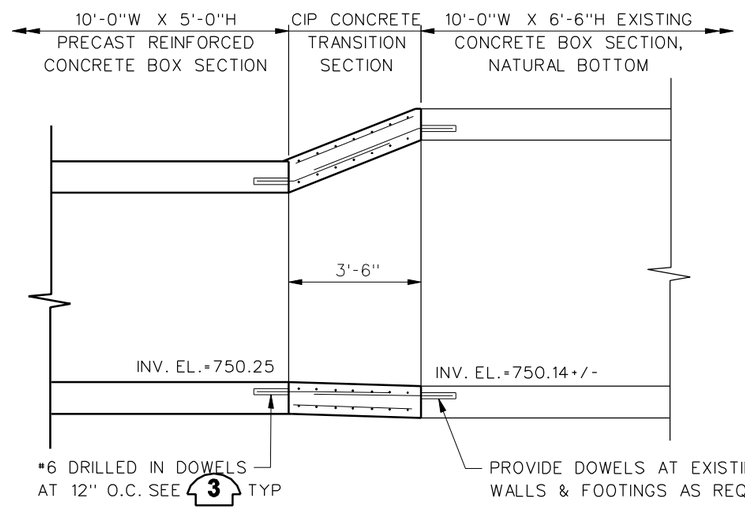

SECTION D

0 1' 2'

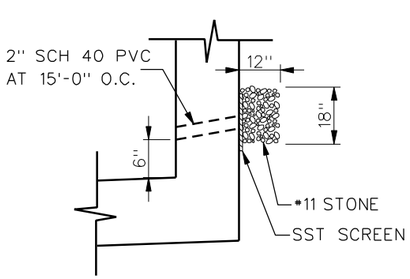

WEEP DETAIL 1

0 1'

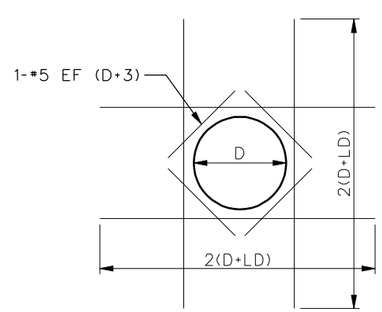

ADDITIONAL REINFORCEMENT AT OPENINGS IN WALLS AND SLABS 2

NTS

NOTES:

1. THIS DETAILS APPLIES TO ALL OPENINGS IN WALLS AND SLABS WHEN LARGEST OPENING DIMENSION IS GREATER THAN TWO TIMES SECTION THICKNESS OR GREATER THAN REINFORCING SPACING IN THE SECTION.
2. THE AREA OF ADDITIONAL REINFORCING REQUIRED IN EACH FACE ON EACH SIDE OF AN OPENING SHALL EQUAL OR EXCEED ONE-HALF OF THE AREA OF THE INTERCEPTED BARS IN EACH FACE, IN EACH DIRECTION, RESPECTIVELY WITH A MINIMUM OF 1-#5 EACH FACE.
3. PLACE THE ADDED BARS IN THE SAME LAYERS AS THE WALL OR SLAB REINFORCING.
4. LD=EMBEDMENT LENGTH.

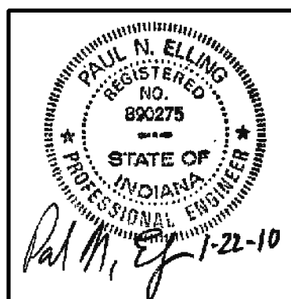

Revision Number	Revision Description	Drawn By	Checked By	Date

Designed By	TWO
Drawn By	TWO
Checked By	PJE
Approved By	PNE
Filename	344TS02.DGN
Project No.	11715
Project Date	1/22/10

CITY OF BLOOMINGTON DEPT. OF PUBLIC WORKS
KIRKWOOD AVENUE STREETSCAPE PHASE III
COLLEGE AVENUE TO ROGERS STREET
BLOOMINGTON, INDIANA

STRUCTURAL DETAILS

Sheet No. 43

Drawing No. S2

$FILE$ $DATE$ $TIME$

...\Projects\11715\Dwg\344ts02.dgn 1/21/2010 6:12:04 PM

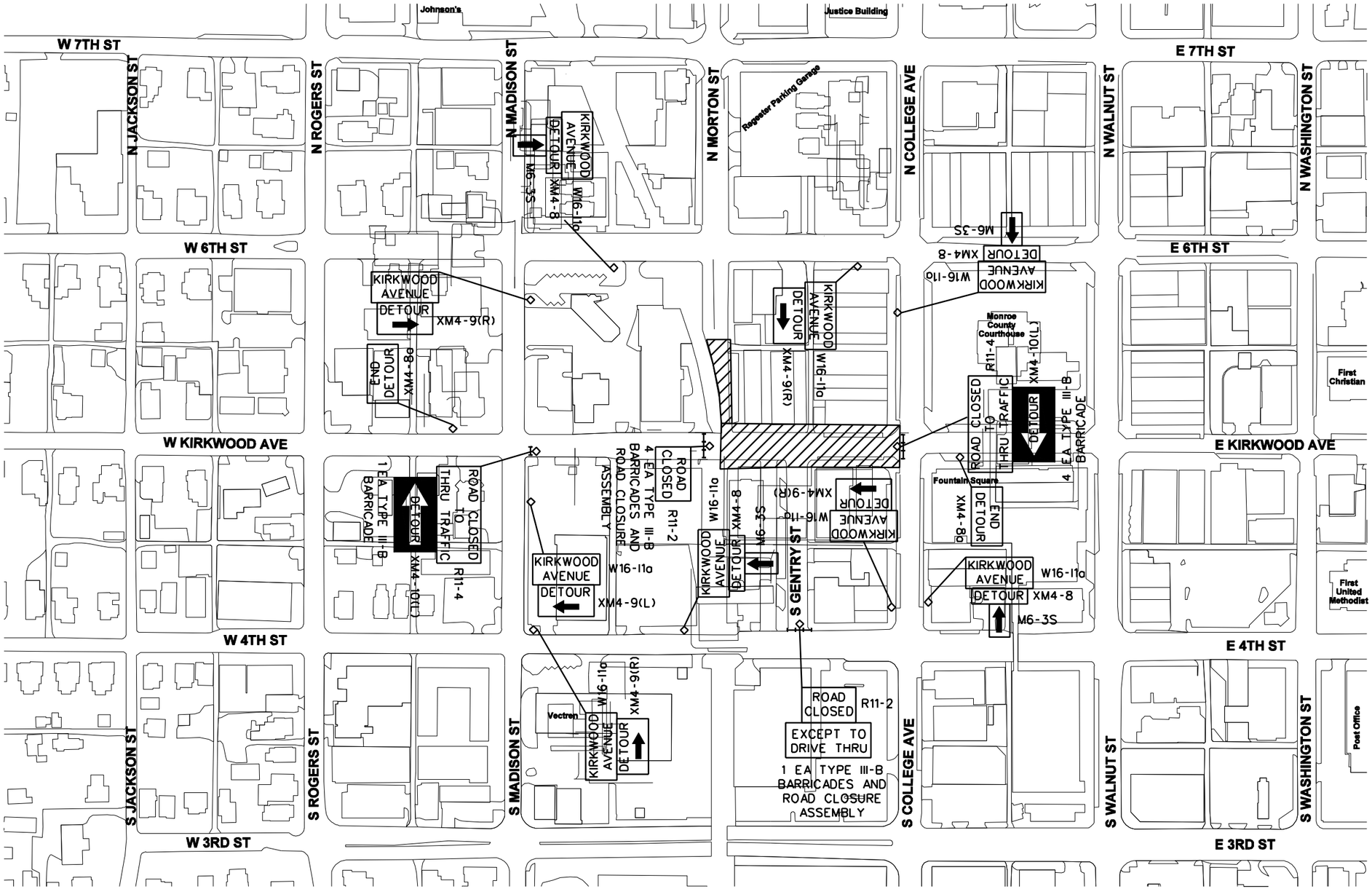

WORK DESCRIPTION:

1. All proposed work within the Phase 1 limits shall be completed during Phase 1 of construction.

2. Access to Bank One drive thru shall be required from S Gentry Street.

3. No construction can begin until the end of Spring Session class at Indiana University.

TRAFFIC DESCRIPTION:

1. Roadway will be completely closed to traffic from the B-Line Trailway to S. College Avenue.

2. Access to all building by pedestrians shall be maintained throughout Phase 1 of construction.

PHASE 1
ESTIMATED DURATION
30 DAYS

0 200'

Phase 1 - Construction Zone

NOTES:

1. ALL SIGNS TO BE MOUNTED ON STANDARDS POSTS

2. ALL SIGNS IN ACCORDANCE WITH INDOT STANDARDS AND INDIANA MANUAL ON UNIFORM TRAFFIC CONTROL DEVICES.

3. ALL SIGNS, BARRICADES AND DRUMS IN CONSTRUCTION ZONE TO BE MOUNTED WITH A TYPE C (STEADY BURN) WARNINGLIGHT AND MAINTAINED DUSK TO DAWN.

4. OPEN EXCAVATION IS TO BE ADDITIONALLY PROTECTED BY A TEMPORARY 4' ORANGE SNOW FENCING, TO DISCOURAGE PEDESTRIAN ACCESS.

LEGEND

- TEMPORARY CONSTRUCTION FENCING
- TYPE III-B BARRICADES
- TEMPORARY CONCRETE BARRICADES
- CONSTRUCTION BARREL

PAUL N. ELLING
REGISTERED
NO. 890275
STATE OF INDIANA
PROFESSIONAL ENGINEER

1-22-10

Revision Number	Revision Description	Drawn By	Checked By	Date

Designed By	JAB
Drawn By	JAB
Checked By	PNE
Approved By	PE
Filename	344TM01.DGN
Project No.	11715
Project Date	1/22/10

CITY OF BLOOMINGTON DEPT. OF PUBLIC WORKS
KIRKWOOD AVENUE STREETSCAPE PHASE III
COLLEGE AVENUE TO ROGERS STREET
BLOOMINGTON, INDIANA

MAINTENANCE OF TRAFFIC PHASE 1

DONOHUE & ASSOCIATES

Sheet No. 44

Drawing No. T1

$DATE$ $TIME$

$FILE$

...\Projects\11715\Dwg\344tm01.dgn 1/27/2010 4:01:46 PM

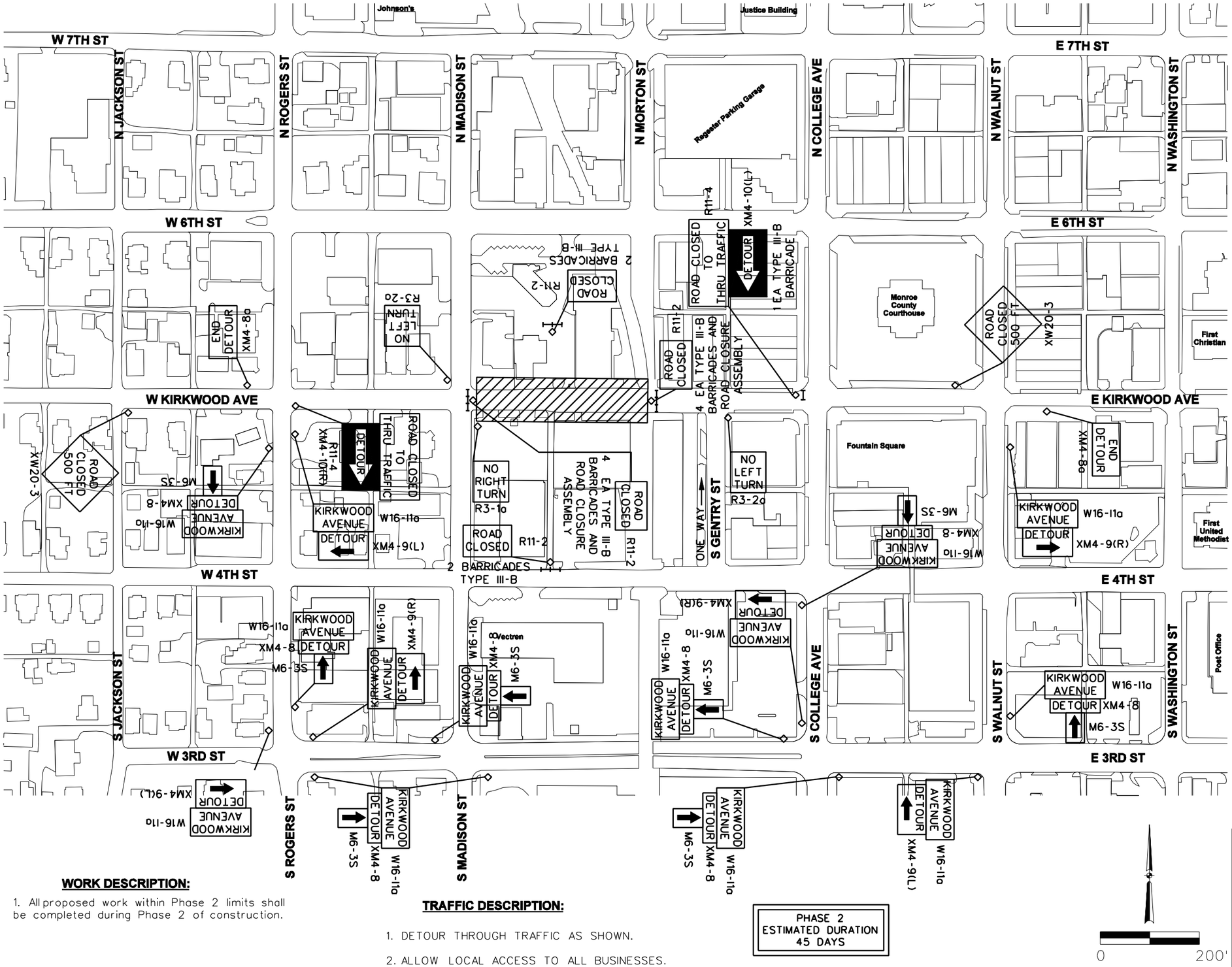

WORK DESCRIPTION:

1. All proposed work within Phase 2 limits shall be completed during Phase 2 of construction.

TRAFFIC DESCRIPTION:

1. DETOUR THROUGH TRAFFIC AS SHOWN.
2. ALLOW LOCAL ACCESS TO ALL BUSINESSES.
3. USE FLAGGERS TO CONTROL TRAFFIC WHEN NECESSARY AROUND EXCAVATIONS.

PHASE 2
ESTIMATED DURATION
45 DAYS

0 200'

Phase 2 - Construction Zone

NOTES:

1. ALL SIGNS TO BE MOUNTED ON STANDARDS POSTS.
2. ALL SIGNS IN ACCORDANCE WITH INDOT STANDARDS AND INDIANA MANUAL ON UNIFORM TRAFFIC CONTROL DEVICES.
5. ALL SIGNS, BARRICADES AND DRUMS IN CONSTRUCTION ZONE TO BE MOUNTED WITH A TYPE C (STEADY BURN) WARNING LIGHT AND MAINTAINED DUSK TO DAWN.
6. OPEN EXCAVATION IS TO BE ADDITIONALLY PROTECTED BY A TEMPORARY 4' ORANGE SNOW FENCING, TO DISCOURAGE PEDESTRIAN ACCESS.

LEGEND

- I TYPE III-B BARRICADES
- — TEMPORARY CONCRETE BARRICADES
- • CONSTRUCTION BARREL

PAUL N. ELLING
REGISTERED
NO. 890275
STATE OF INDIANA
PROFESSIONAL ENGINEER
1-22-10

Revision Number	Revision Description	Drawn By	Checked By	Date

Designed By	JAB
Drawn By	JAB
Checked By	PNE
Approved By	PE
Filename	344TM02.DGN
Project No.	11715
Project Date	1/22/10

CITY OF BLOOMINGTON DEPT. OF PUBLIC WORKS
KIRKWOOD AVENUE STREETSCAPE PHASE III
COLLEGE AVENUE TO ROGERS STREET
BLOOMINGTON, INDIANA

MAINTENANCE OF TRAFFIC PHASE 2

DONOHUE & ASSOCIATES

Sheet No. 45

Drawing No. T2

$FILE$ $DATE$ $TIME$

...\Projects\11715\Dwg\344tm02.dgn 1/21/2010 6:14:46 PM

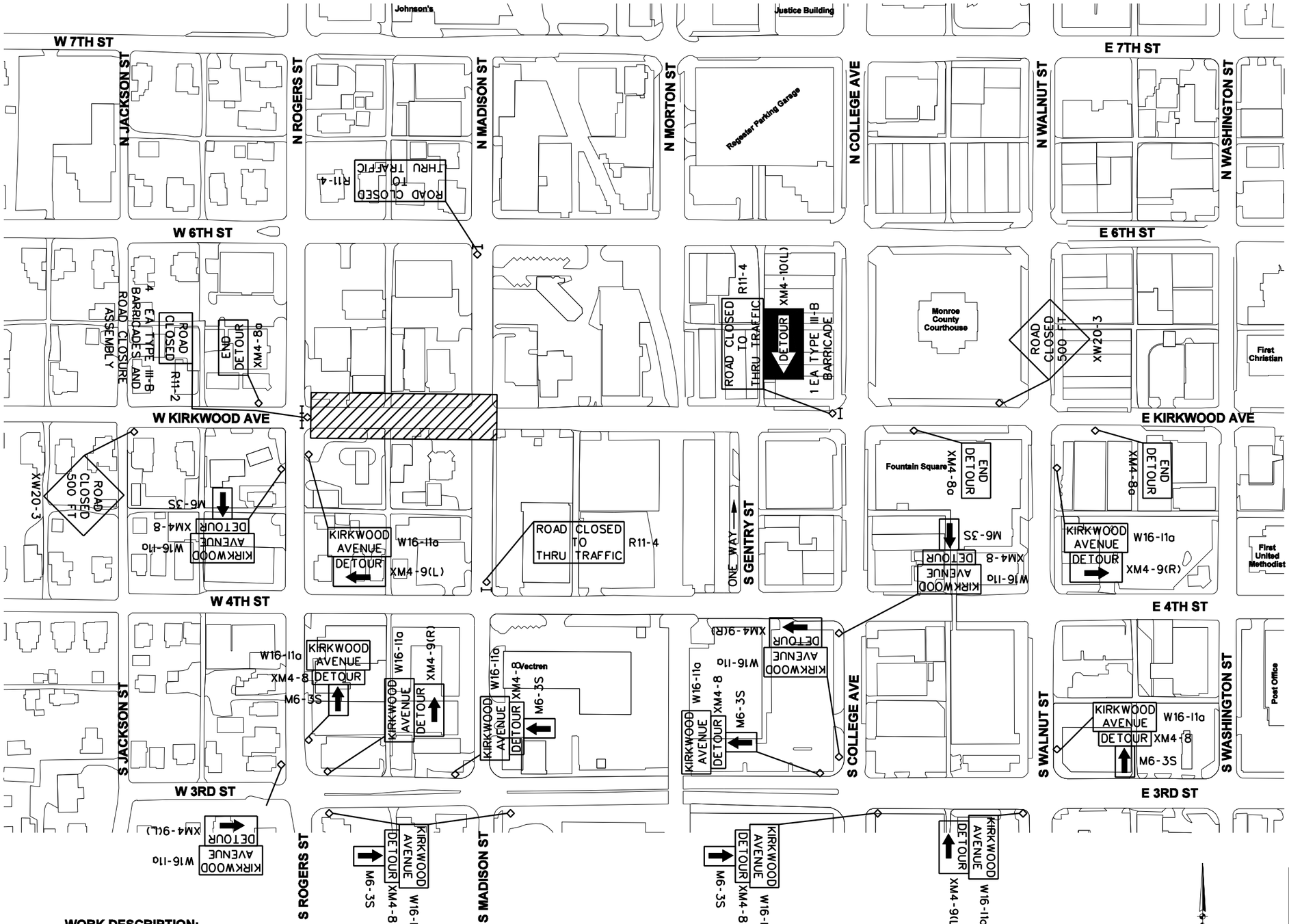

WORK DESCRIPTION:

1. All proposed work within Phase 3 limits shall be completed during Phase 3 of construction.

2. All work shall be completed before Indiana University begins Fall Session of classes.

TRAFFIC DESCRIPTION:

1. DETOUR THROUGH TRAFFIC AS SHOWN.

2. ALLOW LOCAL ACCESS TO ALL BUSINESSES.

3. USE FLAGGERS TO CONTROL TRAFFIC WHEN NECESSARY AROUND EXCAVATIONS.

PHASE 3
ESTIMATED DURATION
30 DAYS

0 200'

Phase 3 - Construction Zone

NOTES:

1. ALL SIGNS TO BE MOUNTED ON STANDARDS POSTS.

2. ALL SIGNS IN ACCORDANCE WITH INDOT STANDARDS AND INDIANA MANUAL ON UNIFORM TRAFFIC CONTROL DEVICES.

5. ALL SIGNS, BARRICADES AND DRUMS IN CONSTRUCTION ZONE TO BE MOUNTED WITH A TYPE C (STEADY BURN) WARNING LIGHT AND MAINTAINED DUSK TO DAWN.

6. OPEN EXCAVATION IS TO BE ADDITIONALLY PROTECTED BY A TEMPORARY 4' ORANGE SNOW FENCING, TO DISCOURAGE PEDESTRIAN ACCESS.

LEGEND

I TYPE III-B BARRICADES

— TEMPORARY CONCRETE BARRICADES

• CONSTRUCTION BARREL

PAUL N. ELLING
REGISTERED
NO.
890275
STATE OF
INDIANA
PROFESSIONAL ENGINEER

1-22-10

Revision Number	Revision Description	Drawn By	Checked By	Date

Designed By	JAB
Drawn By	JAB
Checked By	PNE
Approved By	PE
Filename	344TM03.DGN
Project No.	11715
Project Date	1/22/10

CITY OF BLOOMINGTON DEPT. OF PUBLIC WORKS
KIRKWOOD AVENUE STREETSCAPE PHASE III
COLLEGE AVENUE TO ROGERS STREET
BLOOMINGTON, INDIANA

MAINTENANCE OF TRAFFIC
PHASE 3

DONOHUE & ASSOCIATES

Sheet No. 46

Drawing No. T3

$DATE$ $TIME$

$FILE$

...\Projects\11715\Dwg\344tm03.dgn 1/21/2010 6:16:01 PM