ADDENDUM NO. 1

TO THE

DRAWINGS AND SPECIFICATIONS

FOR THE

KIRKWOOD PHASE III PROJECT – COLLEGE AVENUE TO ROGERS STREET
PW 10-01

ISSUED FROM: CITY HALL AT THE SHOWERS BUILDING
Post Office Box 100
401 North Morton Street
Bloomington, Indiana 47404

ISSUE DATE: February 3, 2010

Bid DATE: February 23, 2010

This Addendum No.1, to the drawings and specifications shall supplement, amend and become a part of the bidding documents, plans, and specifications. All bids and construction contracts shall be based on these modifications to the original contract documents.

ITEM NO. 1: The following are revisions to the Drawings:

1. Sheet 2, Drawing G1:

   A. In the general notes under paragraph 5 regarding Owner provided equipment and materials delete the tree grates from the Owner provided materials. [Note: The tree grates identified are to be provided by the Contractor as set forth in the Special Conditions.]

2. Delete Sheet 5, Drawing P2, Sheet 6, Drawing P3, Sheet 7, Drawing P4, and Sheet 8, Drawing P5 and replace them with Sheet 5, Drawing P2, Sheet 6, Drawing P3, Sheet 7, Drawing P4, and Sheet 8 attached to this Addenda.

   A. The revisions to the drawings are all related to the conduit layout for the street lighting along Kirkwood and for the pendant lights at Madison Street. In addition, the two power feed locations and cabinets shown on the original drawings have been replaced by a single power feed and cabinet between Madison and Morton Streets. All other work shown remains identical to the original drawings.

3. Delete Sheet 41 Drawing M13 and replace them with Sheet 41, Drawing M13 attached to this Addenda.

   A. This drawing was revised significantly and should be thoroughly reviewed for new and changed information.

ITEM NO. 2: The following are revisions to Project Manual Section X Specifications:

1. The following revisions shall be made to SECTION 02720 – STORM SEWERAGE:

   A. Delete paragraph 2.01A and replace it with the following new paragraph 2.01A:

      "A. Pipe

         1. Contractor shall submit listing of pipe materials to be used including certificate that confirms that pipe meets applicable local, city, state and federal codes.
         2. Pipe materials and class or strength shall be continuous between manholes or other structures and shall not be changed except at manhole or other structures.
         3. The project was designed based upon the use of reinforced concrete pipe. Only the pipes listed below will be considered for storm sewer piping on this project.

            a. Reinforced Concrete Pipe (RCP) per City of Bloomington Utilities Construction Specifications article 4.4.5.1.4.
            b. High Density Polyethylene Pipe (HDPE) per City of Bloomington Utilities Construction Specifications article 4.4.5.1.2. Use of corrugated exterior pipe wall shall require additional information be submitted and approved for assembly of watertight joints at precast manholes and structures.
            c. Polyvinyl Chloride Pipe (PVC) per City of Bloomington Utilities Construction Specifications article 4.4.5.1.3."

ITEM NO. 3: The following are additions to the Additional Specifications Section at the end of Section X.

   A. At the end of the Additional Specifications section there are 2 catalog cut sheets depicting the equipment to be installed supplied by the Owner or Contractor. Insert the following additional information for:

1. Street Light Luminaires
2. Cable Suspended Bega Lights
3. Electric Service Pedestal
4. Bench
5. Bike Loop

ITEM NO. 4: The following revisions shall be made to SECTION 03300 – CAST IN PLACE CONCRETE

A. Delete paragraph 2.01.J and replace it with the following new paragraph 2.01.J:

"J. Welded Wire Fabric for concrete sidewalks and driveways: ASTM A 185, Welded Wire Fabric 4x4 - W2.1 x W2.1"

B. Delete paragraph 2.02.C and replace it with the following new paragraph 2.02.C:

"C. Provide the specified reinforcing fibers in all concrete unless the concrete is otherwise reinforced with welded wire fabric or reinforcing bars. Concrete curbing shall have both reinforcing fibers and reinforcing bars. Add fibers to mix at a rate of 1.0 lb per cubic yard, unless otherwise recommended by the manufacturer."

C. Delete paragraph 3.04.A and replace it with the following new paragraphs 3.04.A, 3.04.B and 3.04.C and 3.04D:

"A. Before placing concrete, ensure wire fabric and reinforcing bars are clean, free of loose scale, dirt or other foreign coating which would reduce bond to concrete.
B. Place reinforcing bars supported and secured against displacement for all cast structures and concrete curbing.
C. Place welded wire fabric supported and secured against displacement for all cast in place sidewalks and driveways."

	CERTIFIED BY: 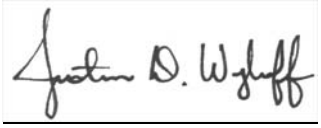 _____ JUSTIN D. WYKOFF CITY OF BLOOMINGTON STATE OF INDIANA

Acknowledge receipt of the addendum by submitting a signed copy with your bid proposal.

RECEIVED BY: **CONTRACTOR (FIRM AND ADDRESS)**

_____

_____

_____

SIGNATURE: _____ **DATE:** _____

PRINTED NAME: _____

TITLE: _____

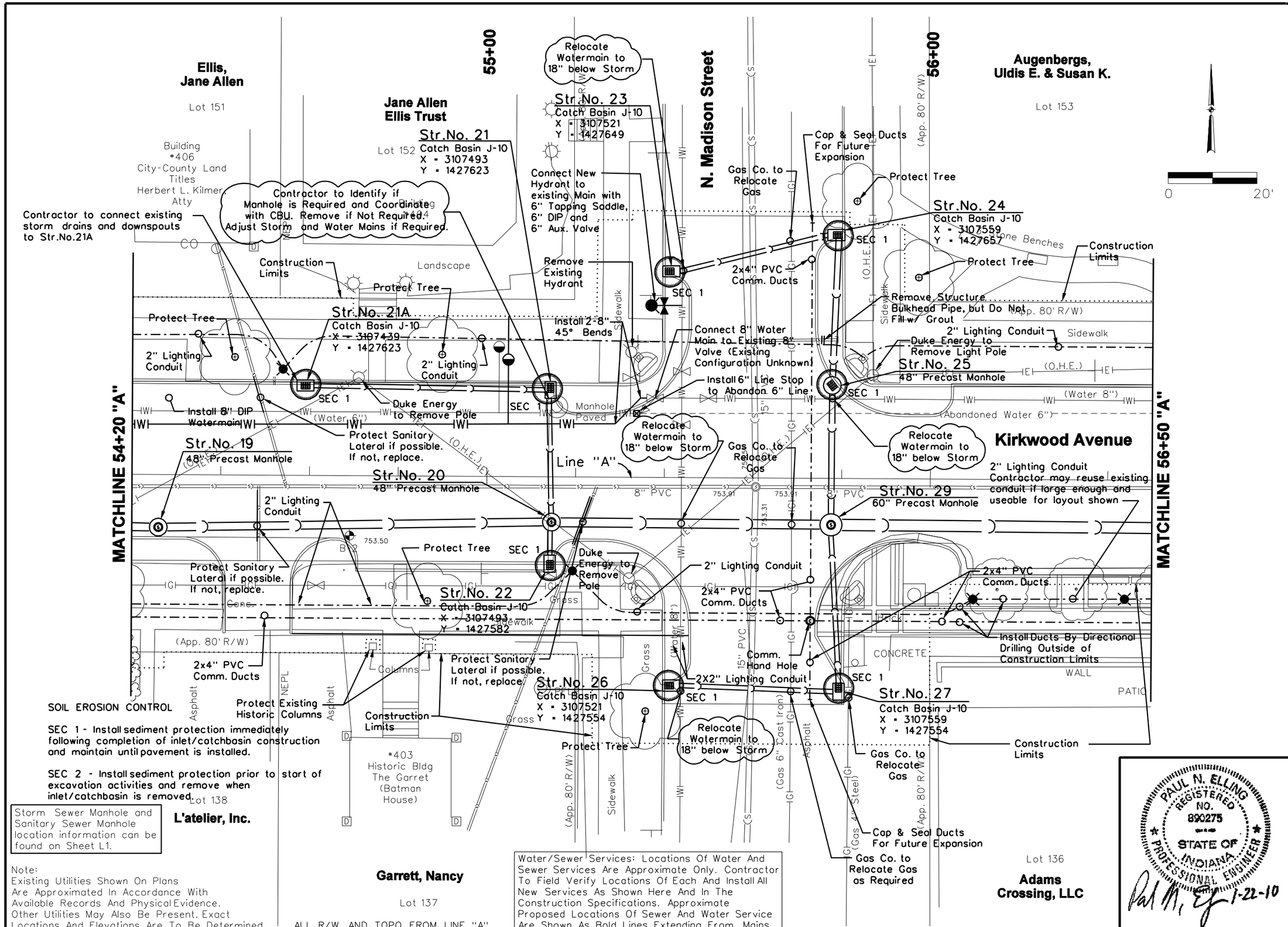

Revision Number	Revision Description	Drawn By	Checked By	Date
1	ADDENDUM 1 - ST LIGHT DESIGN	JAB	PNE	02-02-10

Designed By	JAB
Drawn By	JAB
Checked By	TJM
Approved By	PNE
Filename	344TP02.DGN
Project No.	11715
Project Date	1/22/10

CITY OF BLOOMINGTON DEPT. OF PUBLIC WORKS
KIRKWOOD AVENUE STREETSCAPE PHASE III
COLLEGE AVENUE TO ROGERS STREET
BLOOMINGTON, INDIANA

UTILITY PLANS
SOIL EROSION CONTROL

DONOHUE & ASSOCIATES

Sheet No. 5

Drawing No. P2

$DATE$ $TIME$ $FILE$

...\Projects\11715\Dwg\344tp02.dgn 1/29/2010 3:29:26 PM

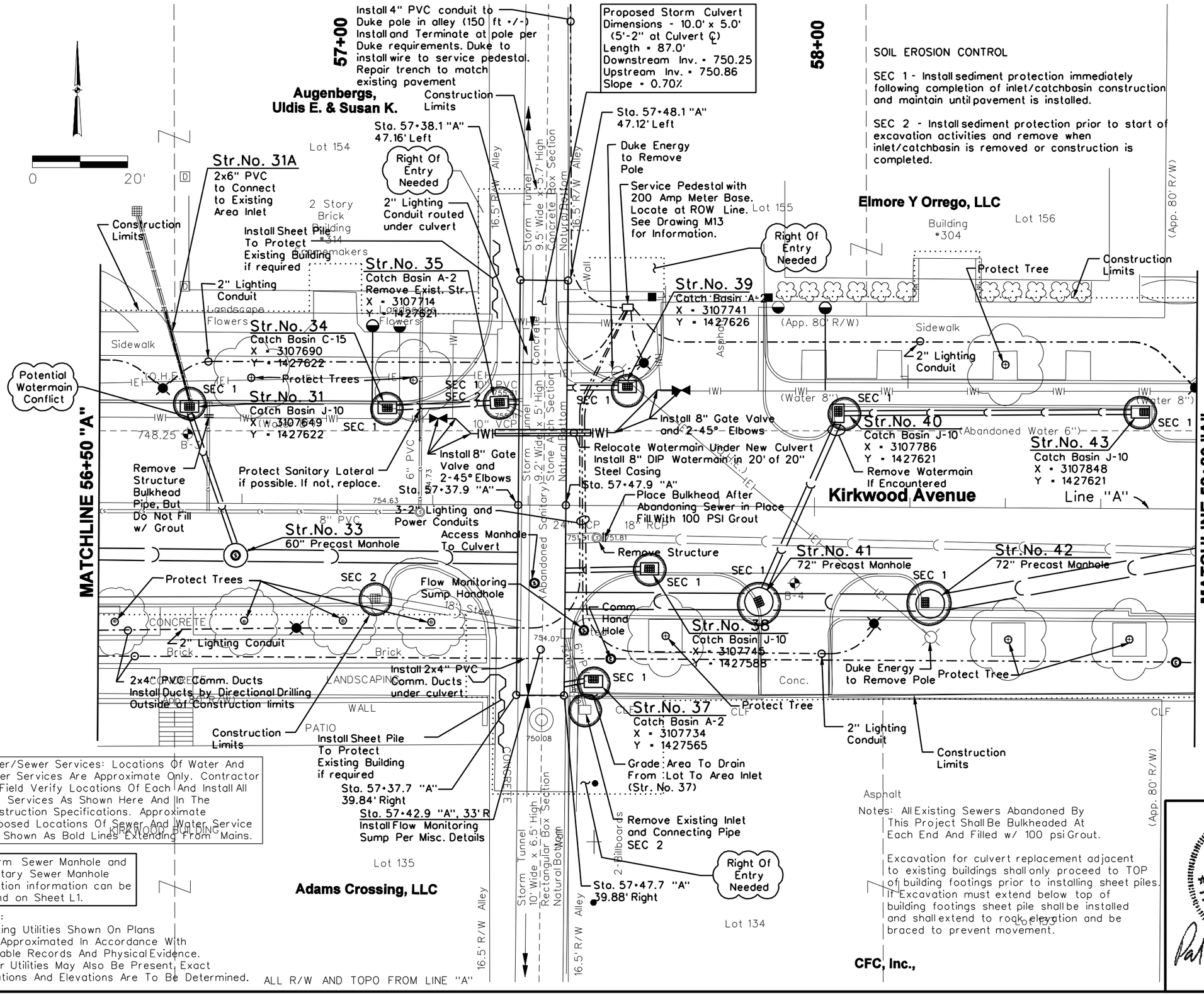

SOIL EROSION CONTROL

SEC 1 - Install sediment protection immediately following completion of inlet/catchbasin construction and maintain until pavement is installed.

SEC 2 - Install sediment protection prior to start of excavation activities and remove when inlet/catchbasin is removed or construction is completed.

Revision Number	Revision Description	Drawn By	Checked By	Date
1	ADDENDUM 1 - ST LIGHT DESIGN	JAB	PNE	02-02-10

Designed By	JAB
Drawn By	JAB
Checked By	TJM
Approved By	PNE
Filename	344TP03.DGN
Project No.	11715
Project Date	1/22/10

CITY OF BLOOMINGTON DEPT. OF PUBLIC WORKS
KIRKWOOD AVENUE STREETSCAPE PHASE III
COLLEGE AVENUE TO ROGERS STREET
BLOOMINGTON, INDIANA

UTILITY PLANS
SOIL EROSION CONTROL

DONOHUE & ASSOCIATES

Sheet No. 6

Drawing No. P3

$FILE$ $DATE$ $TIME$

...\Projects\11715\Dwg\344tp03.dgn 1/29/2010 4:21:41 PM

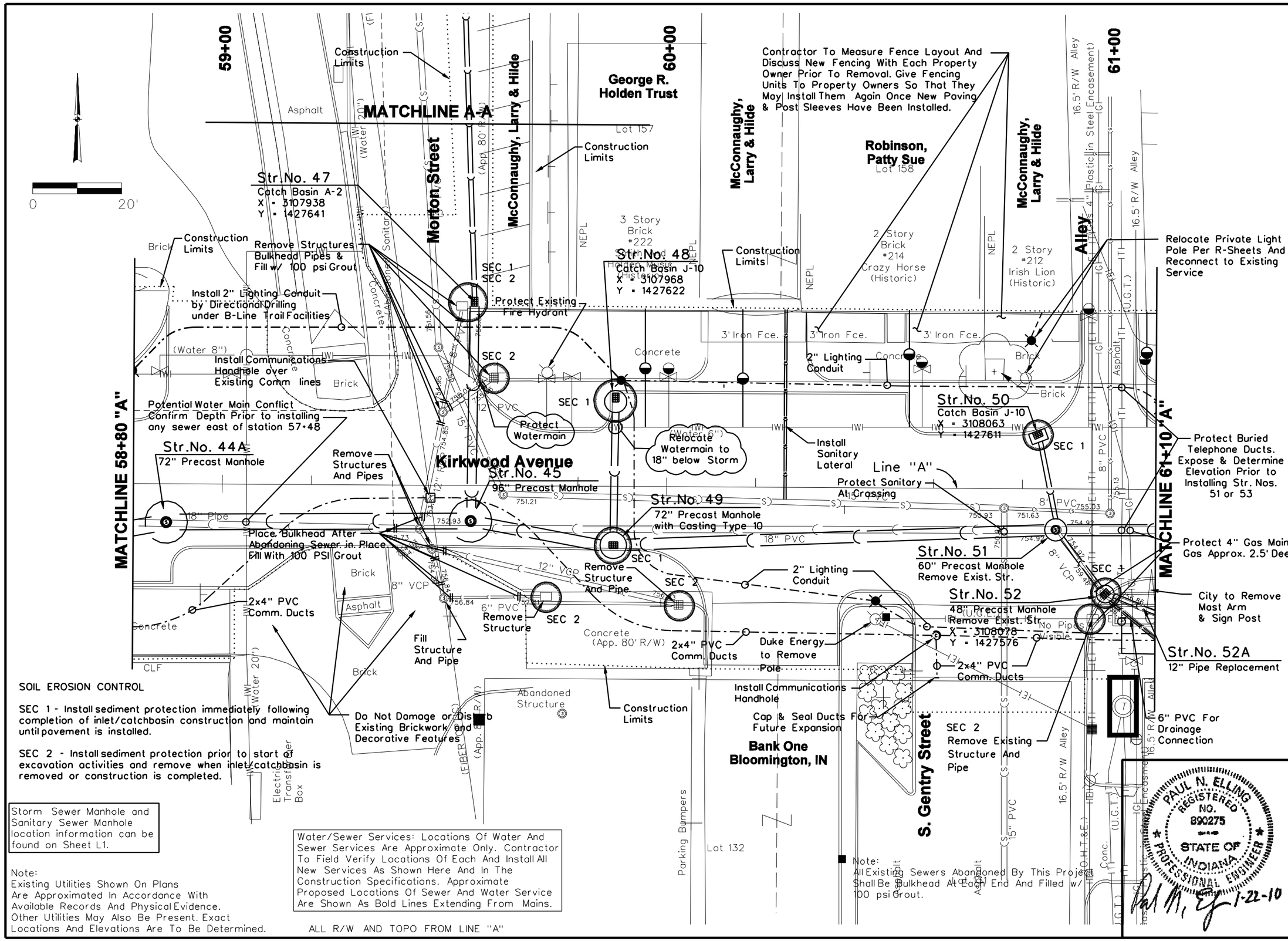

SOIL EROSION CONTROL

SEC 1 - Install sediment protection immediately following completion of inlet/catchbasin construction and maintain until pavement is installed.

SEC 2 - Install sediment protection prior to start of excavation activities and remove when inlet/catchbasin is removed or construction is completed.

Storm Sewer Manhole and Sanitary Sewer Manhole location information can be found on Sheet L1.

Note:
Existing Utilities Shown On Plans Are Approximated In Accordance With Available Records And Physical Evidence. Other Utilities May Also Be Present. Exact Locations And Elevations Are To Be Determined.

Water/Sewer Services: Locations Of Water And Sewer Services Are Approximate Only. Contractor To Field Verify Locations Of Each And Install All New Services As Shown Here And In The Construction Specifications. Approximate Proposed Locations Of Sewer And Water Service Are Shown As Bold Lines Extending From Mains.

ALL R/W AND TOPO FROM LINE "A"

Revision Number	Revision Description	Drawn By	Checked By	Date
1	ADDENDUM 1 - ST LIGHT DESIGN	JAB	PNE	02-02-10

Designed By	JAB
Drawn By	JAB
Checked By	TJM
Approved By	PNE
Filename	344TP04.DGN
Project No.	11715
Project Date	1/22/10

CITY OF BLOOMINGTON DEPT. OF PUBLIC WORKS
KIRKWOOD AVENUE STREETSCAPE PHASE III
COLLEGE AVENUE TO ROGERS STREET
BLOOMINGTON, INDIANA

UTILITY PLANS
SOI; EROSION CONTROL

DONOHUE & ASSOCIATES

Sheet No. 7

Drawing No. P4

$TIME$ $DATE$ $FILE$

...\Projects\11715\Dwg\344tp04.dgn 1/29/2010 4:59:12 PM

SOIL EROSION CONTROL

SEC 1 - Install sediment protection immediately following completion of inlet/catchbasin construction and maintain until pavement is installed.

SEC 2 - Install sediment protection prior to start of excavation activities and remove when inlet/catchbasin is removed or construction is completed.

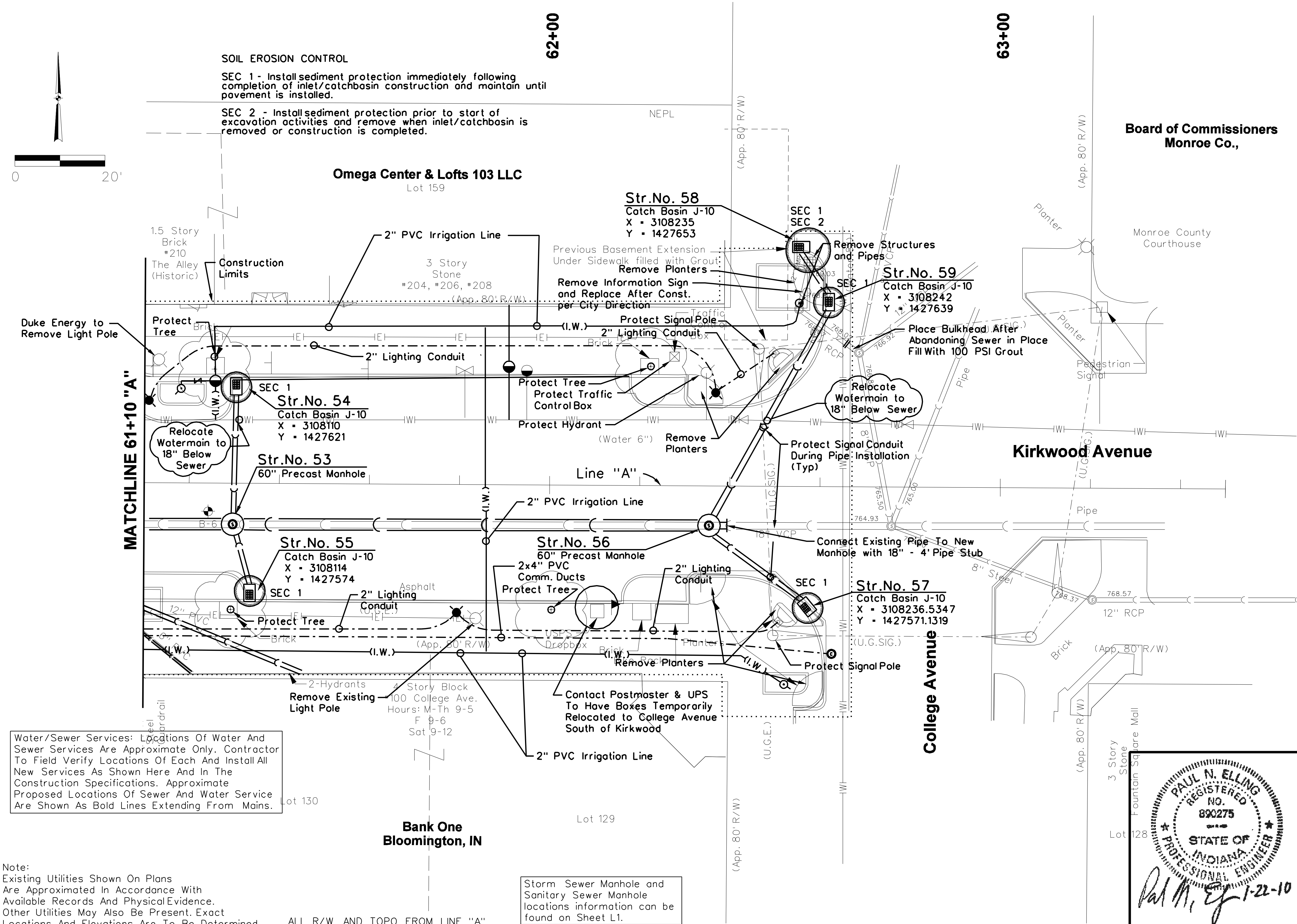

Water/Sewer Services: Locations Of Water And Sewer Services Are Approximate Only. Contractor To Field Verify Locations Of Each And Install All New Services As Shown Here And In The Construction Specifications. Approximate Proposed Locations Of Sewer And Water Service Are Shown As Bold Lines Extending From Mains.

Note:
Existing Utilities Shown On Plans Are Approximated In Accordance With Available Records And Physical Evidence. Other Utilities May Also Be Present. Exact Locations And Elevations Are To Be Determined.

ALL R/W AND TOPO FROM LINE "A"

Storm Sewer Manhole and Sanitary Sewer Manhole locations information can be found on Sheet L1.

PAUL N. ELLING REGISTERED NO. 890275 STATE OF INDIANA PROFESSIONAL ENGINEER

Paul N. Elling 1-22-10

Revision Number	Revision Description	Drawn By	Checked By	Date
1	ADDENDUM 1 - ST LIGHT DESIGN	JAB	PNE	02-02-10

Designed By	JAB
Drawn By	JAB
Checked By	TJM
Approved By	PNE
Filename	344TP05.DGN
Project No.	11715
Project Date	1/22/10

CITY OF BLOOMINGTON DEPT. OF PUBLIC WORKS
KIRKWOOD AVENUE STREETSCAPE PHASE III
COLLEGE AVENUE TO ROGERS STREET
BLOOMINGTON, INDIANA

UTILITY PLANS
SOIL EROSION CONTROL

DONOHUE & ASSOCIATES

Sheet No. 8

Drawing No. P5

$FILE$ $DATE$ $TIME$

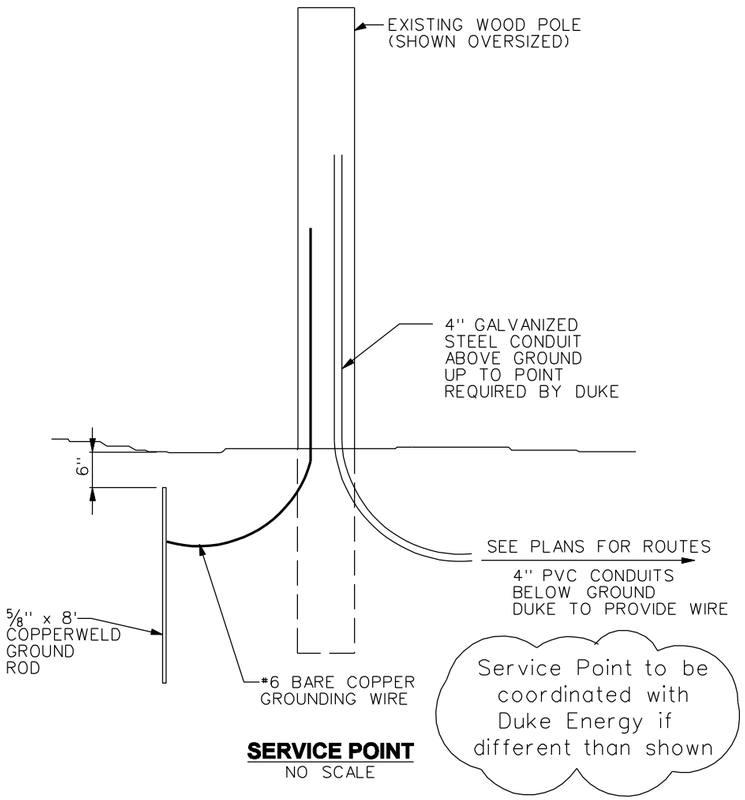

SERVICE POINT
NO SCALE

SERVICE PEDESTAL

SERVICE PEDESTAL SHALL BE TESCO CONTROLS MODEL 27-000, OR EQUAL, WITH 200 AMP METER BASE, 6 CIRCUIT BREAKERS OF SIZES SHOWN, SPACE FOR 4 ADDITIONAL CIRCUITS, 200 AMP 2 POLE SINGLE PHASE MAIN BREAKER, WITH LIGHTING CONTACTOR AND PHOTOCELL CONTROLS. CABINET SHALL BE HOT DIPPED GALVANIZED SHEET STEEL WITH DARK OLIVE GREEN FINISH. ENCLOSURE DOOR SHALL BE HINGED WITH PADLOCKABLE LATCH. NEMA 5-50 AMP RECEPTACLES SHALL BE ACCESSIBLE FROM THE EXTERIOR WITHOUT OPENING THE PEDESTAL AND HAVE INDIVIDUAL LOCKING WEATHERPROOF COVERS.

LIGHTING REMOVAL CONTINUITY:

CONTRACTOR TO COORDINATE WITH DUKE ENERGY TO HAVE EXISTING LIGHTS REMOVED AT APPROPRIATE TIME FOR EACH BLOCK. LIGHTING SHALL BE RESTORED PRIOR TO COMPLETING WORK FOR EACH BLOCK WITHIN THE TIME PERMITTED.

COMMUNICATIONS CONDUIT:

CONTRACTOR TO INSTALL 2 ea 4" PVC Sch. 80 CONDUITS AT THE LOCATIONS SHOWN. THESE CONDUITS WILL BE LEFT VACANT EXCEPT FOR A PULL CORD TO BE INSTALLED. CONDUIT ENDS IN HANDHOLES SHALL BE CAPPED TO BE WATERTIGHT UNTIL USED IN THE FUTURE. COMMUNICATION CONDUIT SHALL BE PLACED WITH BENDS OF A MINIMUM 36" RADIUS. (NO ELBOWS ALLOWED)

COMMUNICATION HANDHOLES:

HANDHOLES SHALL BE BY HARTFORD CONCRETE PRODUCTS, TYPE "M" (4"x4"x2" INTERIOR DIMENSIONS) WITH 30" CASTING AND LID STAMPED "COMMUNICATIONS".

SERVICE POINT CIRCUIT LIST

CIRCUIT	VOLTS	AMP RATING	WIRES	LOAD
1. FESTIVAL POWER	120	50	3#6	50A NEMA 5-50 PLUG
2. FESTIVAL POWER	120	50	3#6	50A NEMA 5-50 PLUG
3. LIGHTS-SERVICE PEDESTAL TO COLLEGE (BOTH SIDES)	240	25	3#4	6 LIGHTS 6 DUPLEX OUTLETS
4. LIGHTS-AROUND SERVICE PEDESTAL (BOTH SIDES)	120	20	3#12	2 LIGHTS 2 DUPLEX OUTLETS
5. LIGHT-SERVICE PEDESTAL TO ROGERS ON NORTHSIDE INCLUDING PENDANT LIGHTS AT MADISON	240	20	3#8	7 LIGHTS 3 DUPLEX OUTLETS
6. LIGHTS-SERVICE PEDESTAL TO ROGERS ON SOUTHSIDE	240	25	3#6	6 LIGHTS 6 DUPLEX OUTLETS
7. SPARE				
8. SPARE				
9. SPARE				
10. SPARE				

NOTES:
1. ALL WIRE SHALL BE CONDUCTOR TYPE XHHW-2
2. ALL LIGHTS ARE 66 WATT EXCEPT FOR 3 LIGHTS IN FRONT OF THE KIRKWOOD BUILDING WHICH ARE 35 WATT.
3. EACH RECEPTACLE ON POLES SHALL BE GFCI 120V.
4. IT IS INTENDED THAT ONE LEG OF EACH CIRCUIT WILL BE CONNECTED TO ALTERNATING LIGHTS PROVIDING 120V POWER AT EACH LIGHT.

SERVICE POINT NOTES:

1. CONTRACTOR SHALL PROVIDE NECESSARY MATERIALS FOR MOUNTING CONDUIT OR ELECTRICAL EQUIPMENT TO EXISTING WOOD POLE.
2. THIS DETAIL FOR CONCEPTUAL USE ONLY. CONTRACTOR SHALL COORDINATE THE REQUIREMENTS IN THESE PLANS AND SPECIFICATIONS WITH THE EQUIPMENT THEY INTEND TO USE AND ARE TO SUBMIT A SERVICE POINT LAYOUT DRAWING FOR REVIEW BY DUKE ENERGY.

CONDUIT INSTALLATION NOTES:

1. ALL CONDUITS ARE TO BE 2" PVC SCH 80 EXCEPT FOR CONDUIT BETWEEN DUKE POLE AND SERVICE PEDESTAL WHICH SHALL BE 4" PVC SCH 80.
2. SEE PLANS FOR LOCATIONS OF CONDUIT.
3. ALL CONDUITS ARE TO BE BURIED 36" DEEP IF POSSIBLE. ADVISE ENGINEER IF DIFFERENT DEPTHS ARE REQUIRED.
4. LIGHTING CIRCUITS SHALL BE LABELED ACCORDING TO PHASE AND CIRCUIT NUMBER AT EACH LIGHT POLE . IF MULTIPLE CIRCUITS ARE IN CONDUITS APPEARING AT A LIGHT POLE THE CIRCUIT NOT CONNECTED TO THE LIGHT/RECEPTACLE SHALL BE CONTINUOUS THRU THE LIGHT.
5. ALL VACANT CONDUITS SHALL HAVE A PULL CORD INSTALLED.

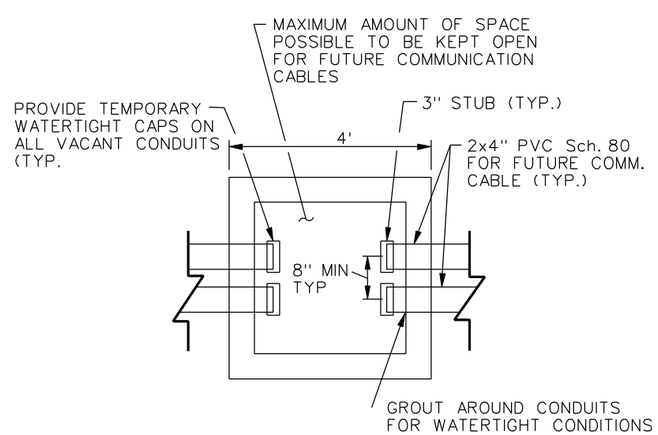

CABLE PLACEMENT
IN COMMUNICATION HANDHOLES
NO SCALE

PAUL N. ELLING
REGISTERED
NO.
890275
STATE OF
INDIANA
PROFESSIONAL ENGINEER
1-22-10

Revision Number	Revision Description	Drawn By	Checked By	Date
1	ADDENDUM 1 - ST LIGHT DESIGN	JAB	PNE	02-02-10

Designed By	JAB
Drawn By	JAB
Checked By	TJM
Approved By	PNE
Filename	344TD13.DGN
Project No.	11715
Project Date	1/22/10

CITY OF BLOOMINGTON DEPT. OF PUBLIC WORKS
KIRKWOOD AVENUE STREETSCAPE PHASE III
COLLEGE AVENUE TO ROGERS STREET
BLOOMINGTON, INDIANA

MISC. ELECTRIC DETAILS

DONOHUE & ASSOCIATES

Sheet No. 41

Drawing No. M13

$TIME$
$DATE$
$FILE$

...\Projects\11715\Dwg\344td13.dgn 2/1/2010 9:18:03 AM

A850SR LED OLD TOWN SERIES SPECIFICATIONS

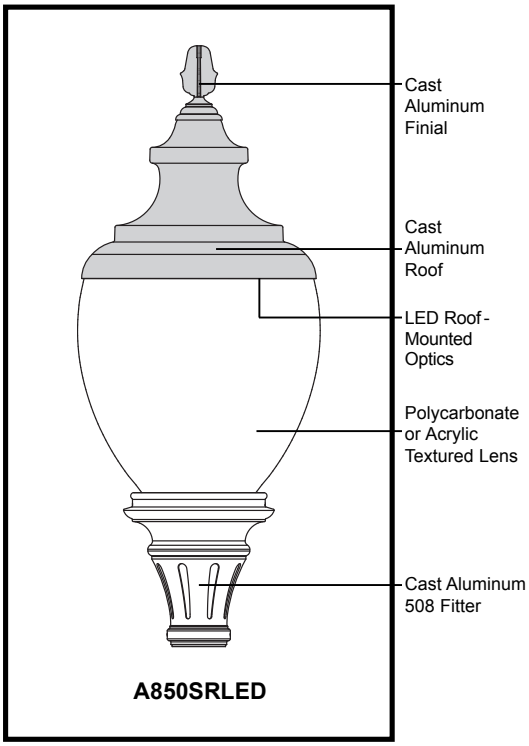

LUMINAIRE DESIGN

- The luminaire shall be a traditional acorn style fixture provided with a decorative cast aluminum fitter, a polycarbonate or acrylic clear textured acorn and a cast aluminum roof.
- The luminaire shall have LED light sources and roof mounted, down-lighting optics.
- The luminaire shall be 16” diameter and 40 1/2” overall height.
- The luminaire shall be UL or ETL listed in U.S. and Canada.

POST FITTER

- The fitter shall be heavy wall cast aluminum for high tensile strength.
- The fitter shall have an inside diameter opening of 8 1/2” to attach to the 8” neck of the acorn globe.
- When ordered with a Sternberg pole, the fitter shall be welded to the pole top or tenon to ensure safety and to ensure the luminaire will remain plumb and level over the luminaire life.

DRIVER

- The LED driver shall be securely mounted inside the fitter, for optimized performance and longevity.
- The LED driver shall be supplied with a quick-disconnect electrical connector on the power supply, providing easy power connections and fixture installation.

LIGHT SOURCES

- The luminaire shall use high output, high brightness LEDs.
- The LEDs shall be mounted in arrays, on printed circuit boards designed to maximize heat transfer to the heat sink surface.
- The LEDs shall be attached to the printed circuit board with not less than 90% pure silver to insure optimal electrical and thermal conductivity.
- The LEDs and printed circuit boards shall be protected from moisture and corrosion by a conformal coating of 1 to 3 mils.
- The LEDs and printed circuit board construction shall be environmentally friendly and 100% recyclable. They shall not contain lead, mercury or any other hazardous substances and shall be RoHS compliant.
- The LED life rating data shall be determined in accordance with IESNA LM-80-08.

(Continued on next page)

A850SR LED OLD TOWN SERIES SPECIFICATIONS

LIST NO. A850SR LED OLD TOWN SERIES

OPTICS

• The luminaire shall be provided with individual, acrylic, refractor type optics applied to each LED.

• The luminaire shall provide Type ___ (III or V) light distribution per the IESNA classifications. Testing shall be done in accordance with IESNA LM-79-08.

PERFORMANCE

• The LED arrays are built in series-parallel circuits which maintain overall light output in the event of single LED failures.

• The LEDs and LED driver shall operate over a -40°C (-40°F) to +50°C (122°F) ambient air temperature range.

• The High Performance white LEDs will have a life expectancy of approximately 70,000 hours with not less than 70% of original brightness (lumen maintenance), rated at 25°C.

• The High Brightness, High Output LED's shall be 4500K (3500K or 6000K option) color temperature with a minimum of 75 CRI.

• The luminaire shall have a minimum _____ (see table) initial delivered lumen rating when operated at steady state with an average ambient temperature of 25°C (77°F).

Light Source	Initial Delivered Lumens	Fixture Watts	Light Source	Initial Delivered Lumens	Fixture Watts
6ARC60T5	**6520**	**96**	**6ARC60T3**	**6320**	**96**
6ARC45T5	**5420**	**96**	**6ARC45T3**	**5210**	**96**
6ARC35T5	**4840**	**96**	**6ARC35T3**	**4650**	**96**
4ARC60T5	**4410**	**66**	**4ARC60T3**	**4270**	**66**
4ARC45T5	**3680**	**66**	**4ARC45T3**	**3530**	**66**
4ARC35T5	**3300**	**66**	**4ARC35T3**	**3160**	**66**
3ARC60T5	**3460**	**51**	**3ARC60T3**	**3210**	**51**
3ARC45T5	**2910**	**51**	**3ARC45T3**	**2660**	**51**
3ARC35T5	**2600**	**51**	**3ARC35T3**	**2380**	**51**
2ARC60T5	**2290**	**35**	**2ARC60T3**	**2110**	**35**
2ARC45T5	**1920**	**35**	**2ARC45T3**	**1750**	**35**
2ARC35T5	**1730**	**35**	**2ARC35T3**	**1560**	**35**

ELECTRONIC DRIVERS

• The driver shall be UL Listed or Recognized.
The driver shall have overload as well as short circuit protection.

• The driver shall pass the IEC6100-4-5 lightning test and isolate the LED's from power line transients.

• The driver shall be a DC voltage output, current limiting design, 50/60HZ.

For 3ARC thru 6ARC LED Light Sources

• The driver shall have a minimum efficiency of 90%.
The driver shall be rated at full load with THD<20% and a power factor of greater than 0.90.

A850SR LED OLD TOWN SERIES SPECIFICATIONS

LIST NO. A850SR LED OLD TOWN SERIES

- The driver shall contain over-heat protection which reduces output to less than half rating if the case temperature reaches 85°C.
- The driver shall have a universal 120 thru 277 AC input range.

For 2ARC LED Light Sources

- The driver shall have a minimum efficiency of 88%.
- The driver shall have a universal 100 thru 264 AC input range.

ACORN

- The acorn shall be 16" diameter and 31 1/2" tall with an 8" diameter neck.
- *The acorn LED assembly shall be retro-fitted to a _____ (competitor) fitter which accepts the standard 8" diameter acorn neck. Consult Sternberg factory.
- The acorn shall be made of _____ (vandal resistant, clear textured polycarbonate or dent resistant (DR) clear textured acrylic. For Acrylic add "A" to model number.
- The acorn shall be supplied with a cast aluminum finial and a solid, cast aluminum roof which includes optimized heat sinks to provide maximum life and performance for the LED light sources.
- The acorn shall be sealed to the cast aluminum roof to provide a moisture-free and bug-free optics chamber for the LED light sources.
- *The acorn shall be provided with a perforated brass decorative ring (PBDR) supplied in a _____ (polished brass or painted) finish. The 2 1/4" wide brass filigree shall allow light transfer through the decorative openings.
- *The acorn shall be provided with a heavy cast decorative ring (CDR) which includes four (4) cast medallions finished in accent gold. The medallions can be customized with name, initials or logo. * (OPTION)

ARMS

- The arms shall be cast aluminum and/or extruded aluminum.
- Arms with decorative filigree shall have meticulously detailed scroll work and gracefully curved brackets.
- **(All except BAPT and 779 arms)** The arms shall be bolted to a post mount adaptor which is welded to the pole to ensure proper alignment.
- **(Twin TA and twin 579 arms)** The arms shall be attached to a decorative center hub which will fit the center tenon of the pole (not shown).

PHOTOCELL OPTIONS

Bi-metal Button Cell Option

- Photocells shall be thermo bi-metal button type.
- On single post-top fixtures, the photocell shall be mounted in the fitter and pre-wired to the driver.

A850SR LED OLD TOWN SERIES SPECIFICATIONS

LIST NO. A850SR LED OLD TOWN SERIES

• On multiple head fixtures, photocells shall be mounted in the pole shaft, on an access plate. The photocell is not pre-wired since drivers are mounted in the fitters and packaged separately.
• The photocell shall turn on at 1.0 foot-candle and turn off at not more than 5 foot-candles.
• The photocell is 120V or 208-277 volt.

Electronic Button Cell Option

• Photocells shall be electronic button type.
• On single post-top fixtures, the photocell shall be mounted in the fitter and pre-wired to the driver.
• On multiple head fixtures, photocells shall be mounted in the pole shaft, on an access plate. The photocell is not pre-wired since drivers are mounted in the fitters and packaged separately.
• The photocell is instant-on at 1.5 foot-candles and turns off 5-10 seconds at 2-3 foot-candles.
• The photocell is 120V or 208-277 volt.

Roto-Lock Type Option (980 fitter only)

• Photocells shall be roto-lock design.
• They shall be thermal-bimetallic switch type.
• Photocells shall be mounted in the housing on the photocell bracket and pre-wired to the driver.
• On multi-fixture poles the photocell shall be mounted in the pole shaft on an access plate. The photocell is not pre-wired since drivers are mounted in the fitters and packaged separately.
• Photocell time delay is 2 minutes to turn on at 1.5 foot-candles and 2 minutes to turn off at no more than 6 foot-candles.
• The photocell is 120-277 volt.

FINISH

• Prior to coating, the luminaire shall be chemically cleaned and etched in a 5-stage washing system which includes alkaline cleaning, rinsing, phosphoric etching, reverse-osmosis water rinsing and non-chrome sealing to ensure corrosion resistance and excellent adhesion for the finish coat.
• The finish coat shall be an electrostatically applied semi-gloss, super durable polyester powder coat, baked on at 400°F, to provide a durable, color retentive finish.
• *The optional _____ (Verde Green or Swedish Iron) finish shall be hand-brushed using a 3-step process. * (OPTION)

WARRANTY

• The luminaire shall be free from all defects in materials and workmanship for a period of five (5) years from the date of manufacture.
• The luminaire manufacturer shall warrant the LED boards/system, during the stated warranty period, against failure defined as more than three (3) simultaneous non-operating LEDs.
• The driver shall be warranted for five (5) years.

STERNBERG LIGHTING
555 Lawrence Ave. Roselle, IL 60172 • 847-588-3400 • Fax 847-588-3440
www. sternberglighting.com Email: info@sternberglighting.com

A850SR LED OLD TOWN ACORNS / FITTERS / ARMS PM - WB

ACORNS / OPTIONAL TOPS

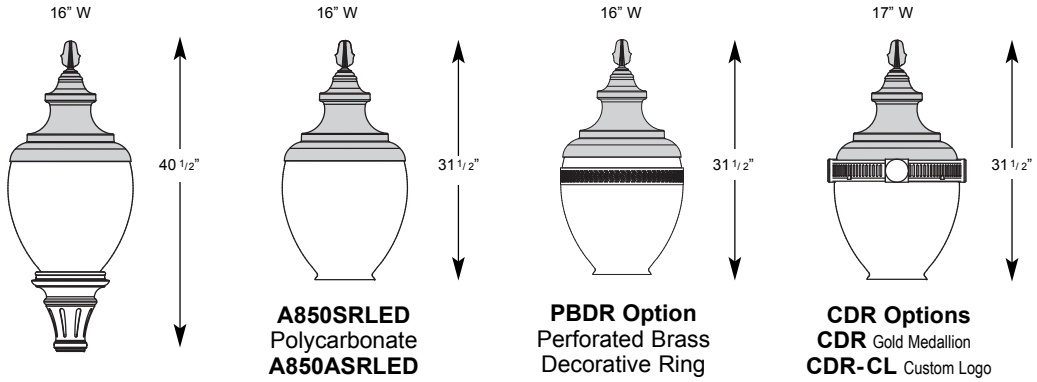

A850SRLED
Polycarbonate
A850ASRLED
Acrylic

PBDR Option
Perforated Brass
Decorative Ring

CDR Options
CDR Gold Medallion
CDR-CL Custom Logo
Cast Aluminum Deco. Rings

FITTERS

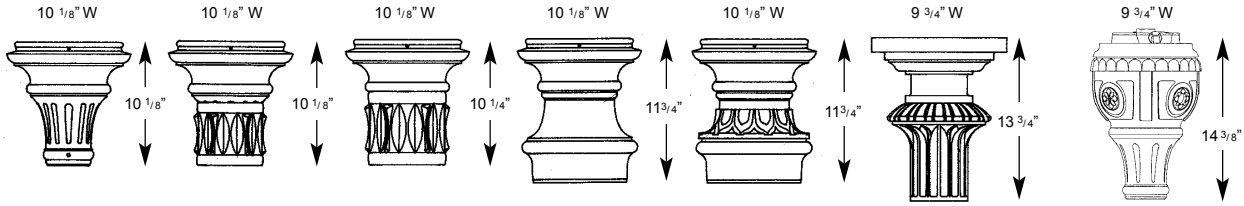

5P or 5T*
(508)
Fits 3" poles or tenons and arms below

BD4
(508BD4)
Fits 4" poles or tenons

BD5
(508BD5)
Fits 5" poles or tenons

B7
(508B7)
Fits 7" poles or tenons

BD7
(508BD7)
Fits 7" poles or tenons

7 or 7T*
(708)
Fits 4" poles or tenons - 3" with adapter & large arms

9 or 9T*
(980)
Fits 3" poles or tenons and large arms

*Twist Lock Acorn (Fitter TL)

ARMS - POST MOUNT (PM) or WALL BRACKETS (WB)

See Arms Section for more information

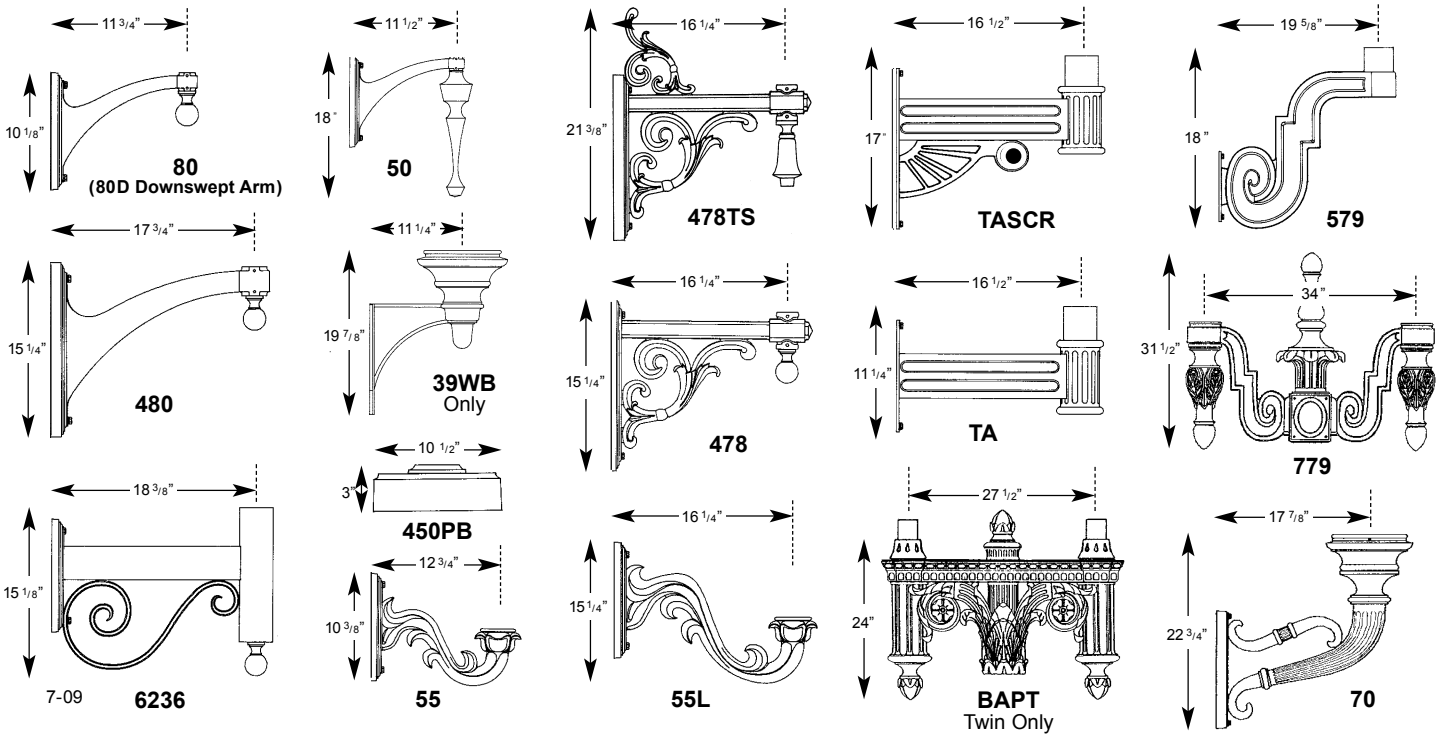

BUILDING A PART NUMBER

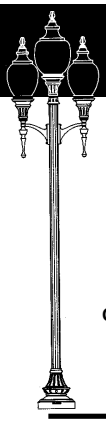

POST & ARM FIXTURES

NO. OF ARMS	ARM MOUNTED FIXTURE: ACORN / FITTER / POSTARM		CENTER POST TOP FIXTURE (PT): ACORN / FITTER		POST (See Post Section)	POST CAP	LIGHT SOURCE	OPTIONS	FINISH
2	A850SRLED/5P/50PM	/	A850SRLED/5P	PT /	4212FP4	/	6ARC45T5	/	BK

WALL FIXTURES

ACORN / FITTER / WALL BRACKET		LIGHT SOURCE		OPTIONS		FINISH
A850SRLED/5P/50WB	/	4ARC45T3	/		/	BK

PIER FIXTURES

Uses same information boxes as wall fixture

A850SRLED/5P/450PB

ACORN / FITTER / PIER BASE

PART NUMBER SELECTIONS

ACORNS
- A850SRLED[1]
- A850ASRLED

FITTERS
- 5P
- 7
- 9
- BD4
- BD5
- BD7
- B7

POST ARMS
- 50PM
- 50DPM
- 478PM
- 478TSPM
- 70PM*
- 80PM
- 80DPM
- 480PM
- 480DPM
- 55PM
- 55LPM
- 6236PM
- 579PT
- TAPT
- TASCRPT
- BAPT

PIER BASE
- 450PB

WALL BRACKET ARMS
- 50WB
- 50DWB
- 478WB
- 478TSWB
- 70WB*
- 80WB
- 80DWB
- 480WB
- 480DWB
- 55WB
- 55LWB
- 6236WB
- 579WB
- TAWB
- TASCRWB
- 39WB*

*No fitter required

LIGHT SOURCES T5
- 6ARC60T5 96W, 6000K Type V Optics
- 6ARC45T5 96W, 4500K Type V Optics
- 6ARC35T5 96W, 3500K Type V Optics
- 4ARC60T5 66W, 6000K Type V Optics
- 4ARC45T5 66W, 4500K Type V Optics
- 4ARC35T5 66W, 3500K Type V Optics
- 3ARC60T5 51W, 6000K Type V Optics
- 3ARC45T5 51W, 4500K Type V Optics
- 3ARC35T5 51W, 3500K Type V Optics
- 2ARC60T5 35W, 6000K Type V Optics
- 2ARC45T5 35W, 4500K Type V Optics
- 2ARC35T5 35W, 3500K Type V Optics

LIGHT SOURCES T3
- 6ARC60T3 96W, 6000K Type V Optics
- 6ARC45T3 96W, 4500K Type V Optics
- 6ARC35T3 96W, 3500K Type V Optics
- 4ARC60T3 66W, 6000K Type V Optics
- 4ARC45T3 66W, 4500K Type V Optics
- 4ARC35T3 66W, 3500K Type V Optics
- 3ARC60T3 51W, 6000K Type V Optics
- 3ARC45T3 51W, 4500K Type V Optics
- 3ARC35T3 51W, 3500K Type V Optics
- 2ARC60T3 35W, 6000K Type V Optics
- 2ARC45T3 35W, 4500K Type V Optics
- 2ARC35T3 35W, 3500K Type V Optics

FINISHES STANDARD
- BKT Black Textured
- BK Black
- VG Verde Green
- PGT Park Green Textured
- PG Park Green
- ABZT Architectural Medium Bronze Textured
- ABZ Architectural Medium Bronze
- SI Swedish Iron
- DBT Dark Bronze Textured
- DB Dark Bronze
- OWGT Old World Gray Textured
- OWG Old World Gray

FINISHES CUSTOM
- WHT White Textured
- WH White
- CV Copper Vein
- WBK Weathered Black
- WBR Weathered Brown
- CD Cedar
- RT Rust
- OI Old Iron
- TT Two Tone
- CM Custom Match

OPTIONS
- CDR Cast Decorative Ring
- CDR-CL[2] Cast Decor Ring with Custom Logo
- PBDR[3] Perforated Brass Decoratice Ring
- PEC1 Photocell-Bimetal 120 Volt
- PEC2 Photocell-Bimetal 208-277 Volt
- PEC1-E Photocell-Electronic 120 Volt
- PEC2-E Photocell-Electronic 208-277 Volt
- R[4] Receptacle Only for Rotolock Photo Cell
- R1[4] Rotolock Photo Cell 120-277 Volt
- FHD Dual Fuse & Holder
- PF per arm Pineapple Finial or Font (for TA, TASCR)
- BF per arm Ball Finial or Font (for TA, TASCR)
- G[4] GFI
- HL[5] Hi - Low Operation

NOTES:
1. White polycarbonate acorns are available. Specify WP after acorn number.
2. Consult factory for Specification Details.
3. Standard is polished. If painted specify PBDR-P.
4. For 9 or fitter only.
5. Not available on 3ARC sources.

STERNBERG LIGHTING

555 Lawrence Ave. Roselle, IL 60172 • 847-588-3400 • Fax 847-588-3440
www. sternberglighting.com Email: info@sternberglighting.com

Housing: Two interlocking die-cast aluminum housings. Lower housing provides four "windows" for additional top light output. Heavy gauge .08" spun aluminum shade with rolled edge, finished white inside. Provided with a ½" male nipple for attachment to a BEGA #477 cable hanger or a swivel plate/stem system.

Enclosure: Handblown seamless three-ply opal glass with screw neck and minimum 75% transmission, fully gasketed for weather tight operation using a high temperature silicone rubber O-ring gasket.

Mounting: Pendant: Stems manufactured to specified lengths, supplied with a swivel canopy. Cable: BEGA #477 Cable hanger with through wiring connection box, ½" I.P. stainless steel nipple to support the luminaire and stainless steel cable clamp. For cables 3/16" to ½" in diameter and up to 10° off level.

Electrical: Medium base porcelain lampholder with nickel plated screw shell. Pulse rated 4 KV. Ballasts are magnetic, HPF available in 120 V, 208 V, 240 V, or 277 V - specify.

Finish: These luminaires are available in four standard BEGA colors: Black (BLK); White (WHT); Bronze (BRZ); Silver (SLV). To specify, add appropriate suffix to catalog number. Custom color supplied on special order.

UL listed, suitable for wet locations. Protection class: IP 44.

Note: When installed in the open, luminaires must be protected against excessive pendulum movement due to wind.

Type:
BEGA Product:
Project:
Voltage:
Color:
Options:
Modified:

Pendant

#477 Cable hanger

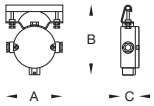

		A	B	C
477	Cable hanger	6 1/3	7	2

Symmetrical light distribution

	Lamp	Lumen	A	B
9484 MH*	1 100 W ED-17 MH	8800	21 5/8	16 1/2

*Coated lamp recommended for optimum optical performance.

BEGA-US 1000 BEGA Way, Carpinteria, CA 93013 (805) 684-0533 FAX (805) 566-9474 www.bega-us.com
©copyright BEGA-US 2009 Updated 11/09

TESCO Service Pedestal
Model 27-000

TESCO CONTROLS, INC.
An Employee-Owned Company

TESCOFLEX Underground service distribution and control pedestals have become the standard for state, county, municipal, highway, and public works departments.

TESCOFLEX Pedestals are constructed of the highest grade of material, whether it's our standard 12 gauge hot dipped galvanized steel, optional stainless steel or anodized aluminum. Our coatings will withstand the most stringent testing applied to outdoor enclosures and meet or exceed state specifications.

Our wide range of sizes and options allows maximum utilization of your space.

TESCOFLEX Service pedestals have been widely accepted by the Utility Industry and are in use today for many applications such as street lighting, park lighting, tennis court lighting, irrigation and pump stations.

FEATURES:

- Small and attractive with no exposed fasteners.
- Available both unmetered and metered up to 200 amps.
- Fabricated from hot dipped galvanized sheet steel.
- Also available in stainless steel or anodized aluminum.
- UL approved copper cable busing and control wiring.
- Oven baked polyurethane powder coated finish for lasting durability.
- Each cabinet is factory wired and tested before shipment.
- Durable all welded construction.
- Meets EUSERC requirements.
- Vandal proof doors with hasp stress rated to 2,000 lbs.

Tesco Controls Inc.
3409 52nd Ave.
Sacramento, CA, 95823

Phone: 916-395-8800
Fax: 916-429-2817
http://www.tescocontrols.com

Tesco Service Pedestal
Model 27-000

TESCO CONTROLS, INC.
An Employee-Owned Company

Cabinet & Power Specifications for Model 27-000 Type III AF

Cabinet Fabrication:

- Maximum external dimensions: 20" Wide x 50" High x 10.25" Deep. Minimum opening to control section 15.25"W x 35"H.
- Cabinet shall be fabricated from 12 gauge hot dipped galvanized steel, 1/8" anodized aluminum, or 304D stainless steel. Internal parts shall be fabricated from 14 gauge cold rolled steel.
- Internal parts shall be fabricated from 14 gauge cold rolled steel.
- Cabinet shall be all welded construction with welding materials specifically designed for the material used.
- All fasteners, latches, and hardware shall be of stainless steel and all hinges shall be continuous piano style.
- There shall be no exposed nuts, bolts, screws, rivets, or other.
- Cabinets shall have fully framed side hinged outer doors with swagged close tolerance sides for flush fit with top drip lip and closed cell neoprene flange compressed gaskets.
- Cabinet shall have an enclosed swept pull section with removable step.
- Removable backpan shall be mounted on 4 welded 1/4" studs.
- Cabinet doors shall have 2,000 lb. stress rated hasp, welded to the cabinet and door.

Control Compartment:

- All components shall match existing components in use for maintenance of spare parts and known reliability.
- The cabinet shall be completely prewired in the factory.
- All control wiring is 19 strand #14 AWG THHN.
- All terminals shall be permanently labeled.

Deadfront Safety Door:

- Distribution and control panel shall have a hinged deadfront panel with 1/4 turn latch and knurled knobs.
- Deadfront shall be hinged on the same side as the front door and shall open a minimum of 120°.

Tesco Controls Inc.
3409 52nd Ave.
Sacramento, CA, 95823

Phone: 916-395-8800
Fax: 916-429-2817
http://www.tescocontrols.com

(Continued on page 3)

Tesco Service Pedestal
Model 27-000

(Continued from page 2)

Power Distribution Panel:

- Main breakers shall be 1 pole, 2 pole, 3 pole, or 4 pole.
- Provide separate metered main, lighting main & disconnects as required.
- There shall be no plug-in circuit breakers.
- All circuit breakers shall be installed in a vertical position, handle up for "On", handle down for "Off.
- Circuit breakers shall be industrial grade.
- All busing shall be U.L. approved copper THHN cable busing, fully rated.

Nameplates and Drawings:

- The function of all circuit breakers, switches and other components as required shall be identified by laminated engraved plastic nameplates fastened with minimum of two 1/4", #4-40 machine screws.
- Wiring schematics shall be Computer Aided Drafting and include all external equipment.
- As built factory drawings shall be enclosed in clear plastic and held inside the outer door by welded hooks.

Certification:

- Manufacturers will be required to furnish independent laboratory certification of metal preparation and finish and will confirm that the overall product meets these specifications. If this agency wishes to witness this testing, all costs to be paid by the contractor.

Model 27-000 Type IIIAF Options

- 100 or 200 Amp Meter Socket
- Maximum Twenty-Eight (28) - 1" Poles (Includes Main Circuit Breaker)
- Metered and Unmetered
- Copper Interior
- P.E. Socket
- Lighting Contactors
- Flashing Beacon Controls
- Time Clocks
- Time Delays
- Transformers
- Test Switches
- Test By-pass

TESCO CONTROLS, INC.
An Employee-Owned Company

Tesco Controls Inc.
3409 52nd Ave.
Sacramento, CA, 95823

Phone: 916-395-8800
Fax: 916-429-2817
http://www.tescocontrols.com

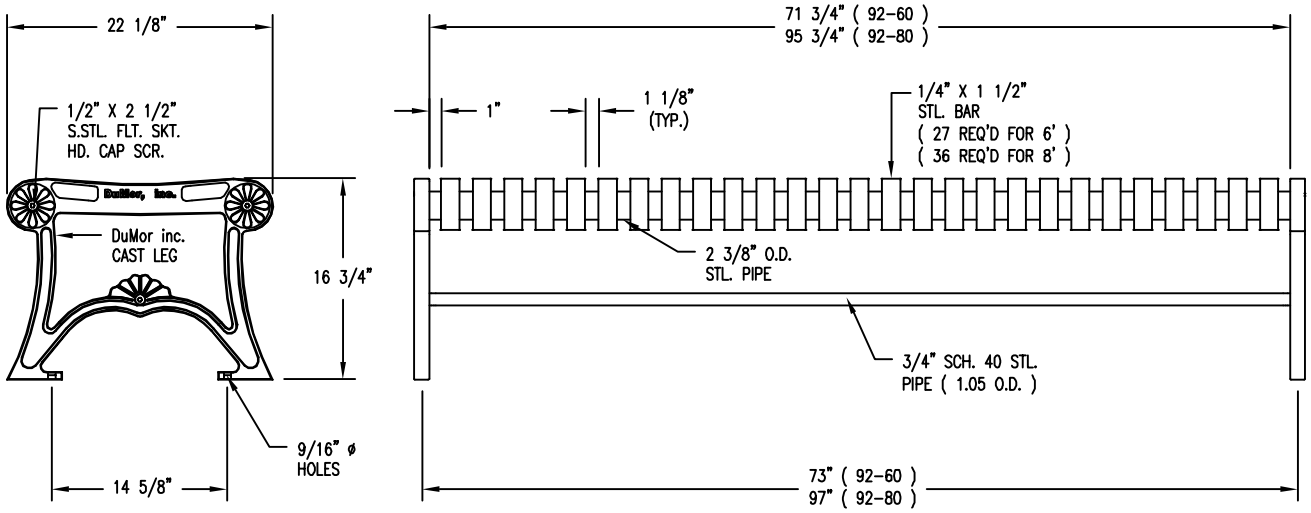

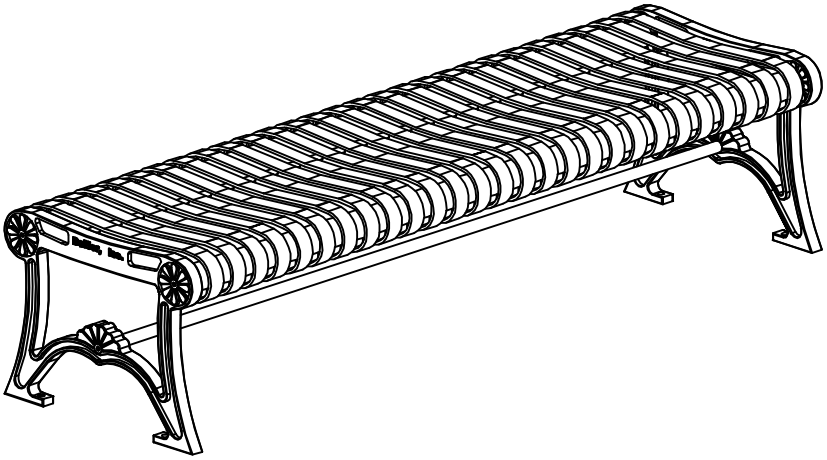

NOTES:

1.) ALL STL. MEMBERS COATED W/ ZINC RICH EPOXY THEN FINISHED W/ POLYESTER POWDER COATING.

2.) 1/2" X 3 3/4" EXPANSION ANCHOR BOLTS PROVIDED

LENGTH OPTIONS

- ☐ 6' BENCH
- ☐ 8' BENCH

DuMor, inc. P.O. Box 142 Mifflintown, PA 17059-0142	SCALE : NONE	TITLE : BENCH		
	DATE DRAWN : 3/22/94			
	DRAWN BY : AH	REV. C	DRAWING NUMBER 92 SERIES	SHEET 1 OF 2
	DATE REV. : 12/14/99			
	REV. BY : JSB			

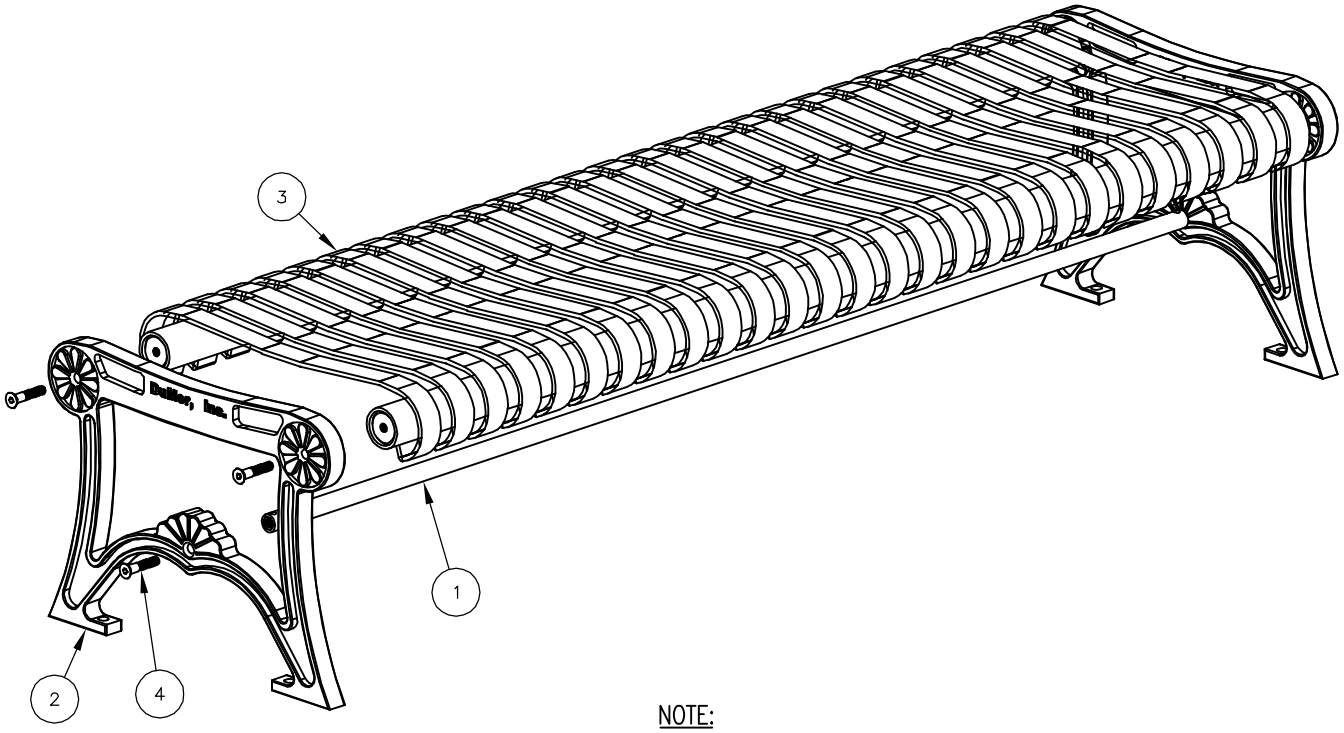

NOTE:

1.) DURING ASSEMBLY PROCEDURE;
DO NOT COMPLETELY TIGHTEN HARDWARE.

2.) THE ACTUAL PARTS WILL NOT BE NUMBERED:
NUMBERS ONLY APPLY TO DRAWING.

STEP 1:

USE 2 – PCS. CAST IRON BENCH SUPPORT (2)
1 – PC. 6' SEAT ASSEMBLY (3)
4 – PCS. 1/2" X 2 1/2" FLT. SKT. HD. CAP SCR. (4)
ATTACH CAST IRON BENCH SUPPORTS (2) TO 6' SEAT ASSEMBLY (3) USING HARDWARE (4). TIGHTEN TO SNUG FIT.

STEP 2:

USE 1 – PC. 71 3/4" PIPE BRACE (1)
2 – PCS. 1/2" X 2 1/2" FLT. SKT. HD. CAP SCR. (4)
ATTACH 71 3/4" PIPE BRACE (1) TO STEP 1 ASSEMBLY USING HARDWARE (4). TIGHTEN TO SNUG FIT.

STEP 3:

UPON COMPLETION OF BENCH ASSEMBLY SQUARE ALL COMPONENTS THEN TIGHTEN ALL HARDWARE.

STEP 4:

MOUNT AND ANCHOR AS SPECIFIED.

ITEM	QTY	PART NO	DESCRIPTION
1	1	0-57-60-04	71 3/4" PIPE BRACE
2	2	0-91-00-02	BKLESS CAST IRON BNCH SUPT
3	1	0-92-60-01	6' STL SEAT
4	6	1-12-065	1/2" X 2 1/2" FLT SKT HD CAP SCR

DuMor, inc.
P.O. Box 142 Mifflintown, PA 17059-0142

SCALE : NONE
DATE DRAWN : 3/22/94
DRAWN BY : AH
DATE REV. : 12/14/99
REV. BY : JSB

TITLE : BENCH ASSEMBLY

REV. C

DRAWING NUMBER 92 SERIES

SHEET 2 OF 2

model no:

BL100N, BL101N, BL105N BL106N

BIKE RACKS

36" BIKE LOOP & CARROUSEL BIKE RACK
INGROUND AND SURFACE MOUNT

wabash valley ®
A DIVISION OF
BROWN JORDAN INTERNATIONAL

© Wabash Valley Manufacturing, Inc.

customer service:

ASSEMBLERS: If you find any parts missing or damaged, or if you're having difficulty assembling your furniture/equipment, call us at:

*** Before calling, have your product model number available.**

1–800–253–8619 (Inside U.S.A.)
260–352–2102 (Outside U.S.A.)
Monday thru Friday,
8:00 AM – 4:30 PM Eastern Time
(EXCEPT HOLIDAYS)

Any correspondence concerning our product should be sent directly to our Customer Service Manager at:

Wabash Valley Manufacturing, Inc.
505 E. Main Street
P.O.Box 5
Silver Lake, IN 46982 U.S.A.
FAX: 260–352–2160

maintenance:

Regular inspection and maintenance of all parts, and fasteners is necessary. Tighten all bolts and nuts. Inspect Tops, Seats, Legs, Braces and Fasteners periodically for wear or vandalism. Replace broken or worn parts immediately or take equipment out of service until repairs are made. Use genuine Wabash Valley replacement parts.

To restore plastisol coating to its luster after prolonged use, wash/rinse/dry and use Armor–All ® or similiar quality vinyl protectant.

KEEP THIS ASSEMBLY/SPECIFICATION SHEET FOR FUTURE REFERENCE.

specifications:

NOTE: We reserve the right to change specifications without notice.

Heat fused poly–vinyl coating, finished on inner–metal structure, to an approximate 3/16" thickness.
Framework assemblies are finished with powder coating; electrostatically applied and oven cured according to powder manufacturer's specifications. Fasteners are stainless steel to resist corrosion.

FRAME:
Bike loops consist of 1/2" x 1 1/2" steel flat bar. The inground bike loops use a 5/16" diameter rod, to add support towards the bottom ends. The carrousel bike rack uses 2 7/8" galvanized tube with 5/8–11–UNC stud welded to 1/4" plate welded into frame tube. The surface mount base plate consists of 3/8" plate.

CARROUSEL:
Carrousel is made of 10 gage sheet metal and 1/2" diameter rod and held onto the frame with a cast aluminum nut.

GENERAL:
Ground space requirements for bike loop are 1 3/4" x 25 7/8". For carrousel bike rack ground space requirements are 35 1/2" x 14 1/2" diameter.

parts identification:

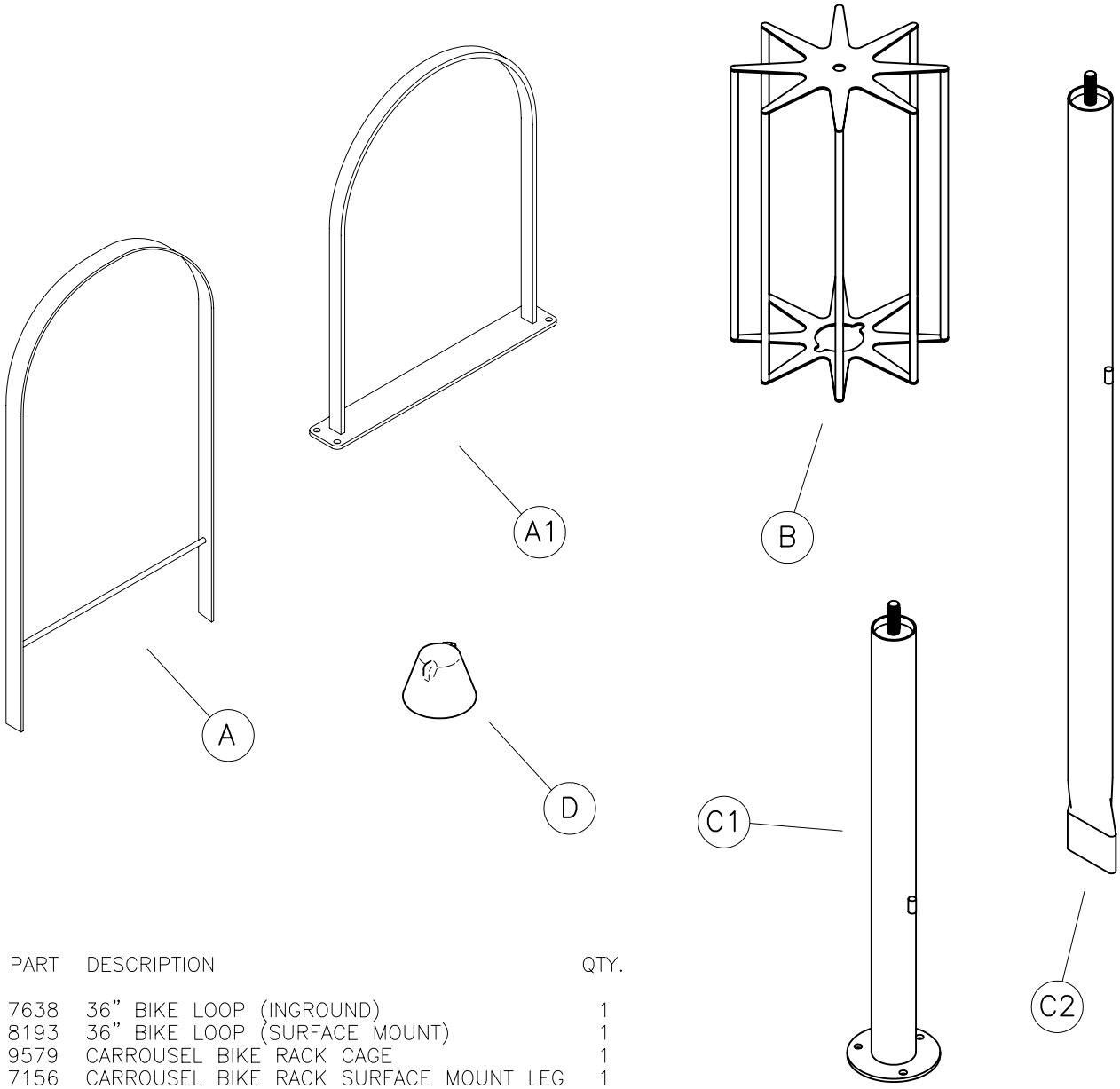

ITEM	PART	DESCRIPTION	QTY.
A	7638	36" BIKE LOOP (INGROUND)	1
A1	8193	36" BIKE LOOP (SURFACE MOUNT)	1
B	9579	CARROUSEL BIKE RACK CAGE	1
C1	7156	CARROUSEL BIKE RACK SURFACE MOUNT LEG	1
C2	7157	CARROUSEL BIKE RACK INGROUND LEG	1
D	7158	CAST NUT	1

hardware identification:

assembly procedures:

IMPORTANT: Assemblers should be reasonably skilled in the assembly of commercial grade/heavy duty fabricated steel equipment.

To ensure proper assembly, it is suggested that you take adequate time to locate and identify each part. To prevent scratching of the finished pieces, we recommend this unit to be assembled on a clean, flat, solid, surface with a drop cloth, allowing plenty of working room. **Also please read the instructions and study the sketches very carefully.** A little extra time spent before assembly will be well worth it in performing a complete, proper assembly. Please note that all parts have been precut and pre–drilled.

During the assembly process leave all bolts and nuts "finger tight", until the entire unit is completely assembled. This allows room for movement to level or adjust all seats, tops, benches, framework and braces if necessary. **After final adjustment and leveling, permanently tighten all nuts, bolts and fasteners.**

CARROUSEL BIKE RACK

STEP 1
The carrousel bike rack is assembled when received. Proceed to step 2 to complete installation.

STEP 2
For the carrousel inground bike rack, prepare a foundation hole as shown below. Place the bike rack in its foundation hole. For the surface mount carrousel bike rack, locate and using base plate as template drill holes and secure to concrete.

Before pouring concrete or tightening fasteners, make sure the bike rack holds 36" to the top of the bike rack nut and is level horizontally as well as vertically.

Pour concrete and let cure for 48 hours.

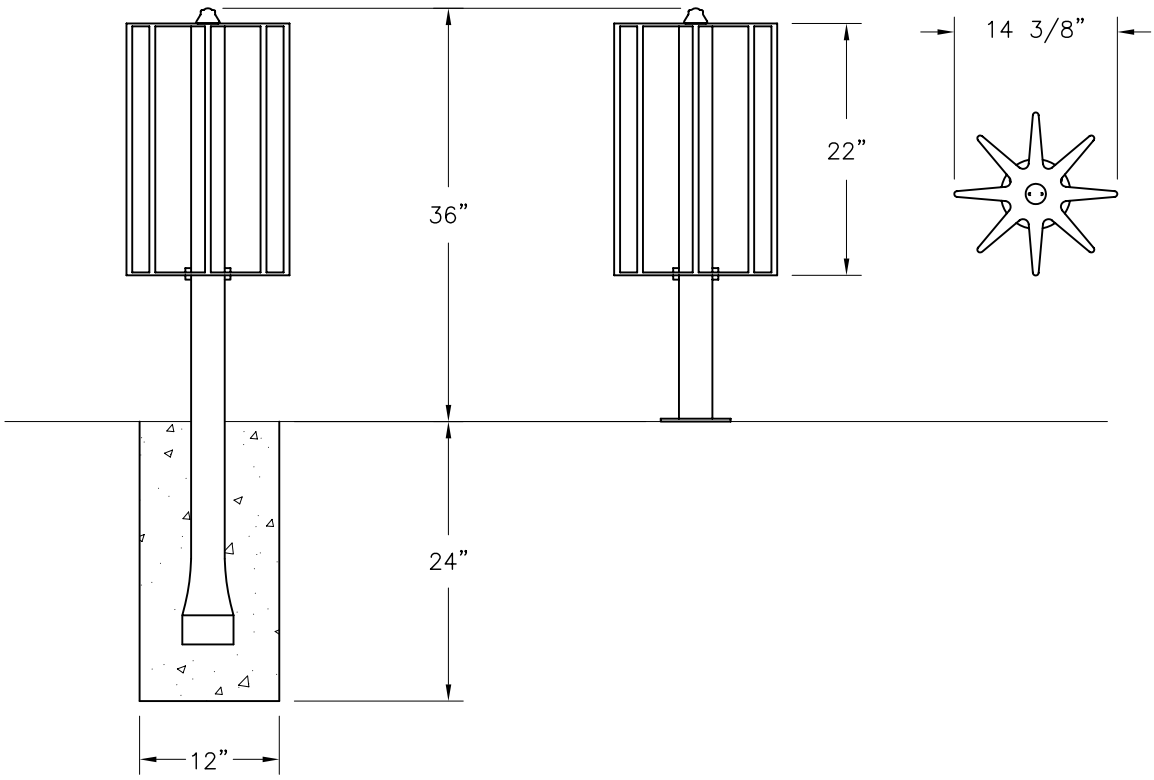

installation:

WARNING: The proper installation for Wabash Valley products may depend upon many factors unique to the site, location, or use of a particular product. Consult with your contractor or other professional to determine your specific installation requirements.

product dimensions:

36" BIKE LOOP – Inground

STEP 1
Prepare two foundation holes as shown below.

STEP 2
Place the bike loop in its foundation holes and block as shown in FIG. 1.

Before pouring concrete, make sure the bike loop holds 36" to the top of the bike loop and is level horizontally as well as vertically.

Pour concrete and let cure for 48 hours.

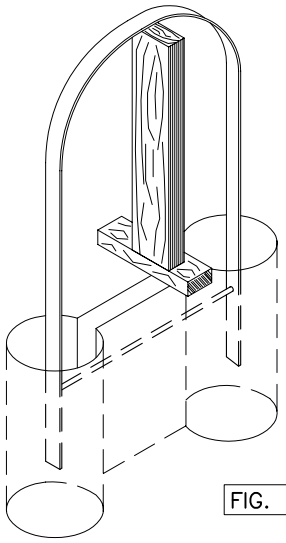

FIG. 1

36" BIKE LOOP – Surface Mount

STEP 1
For the surface mount bike rack, determine location and using holes in base plate as a template, drill holes and secure in concrete. See FIG. 2.

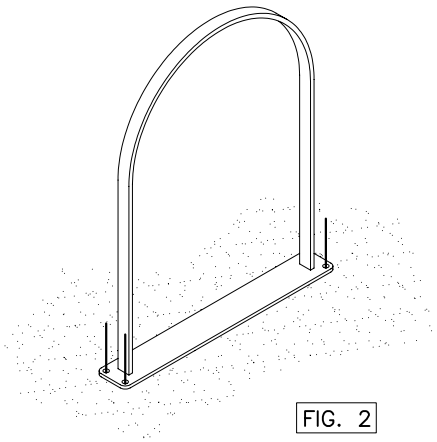
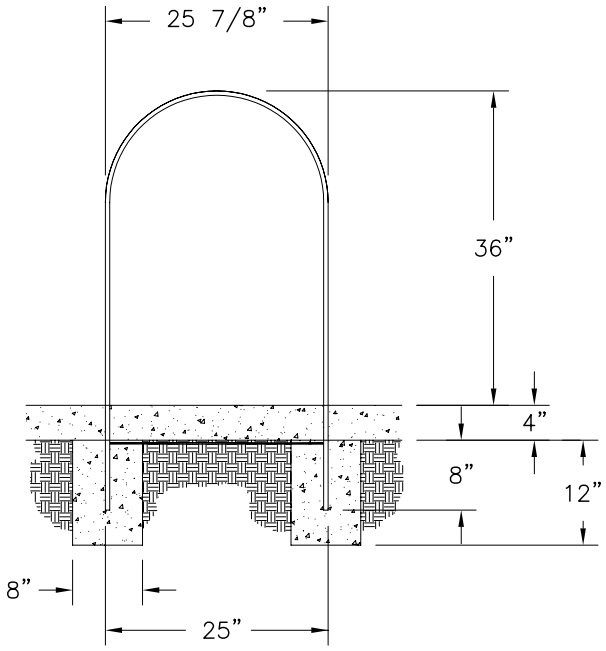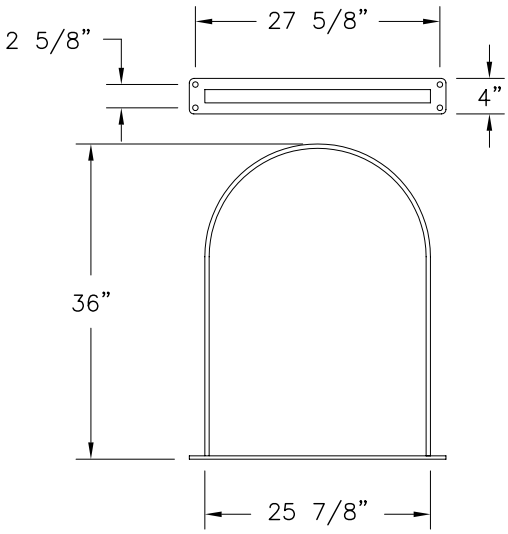
FIG. 2