MARYLIN STREET
JOB No. 400748

PROPOSED

MARILYN DRIVE SIDEWALK & DRAINAGE IMPROVEMENTS

FROM NANCY STREET TO HIGH STREET
BLOOMINGTON, INDIANA

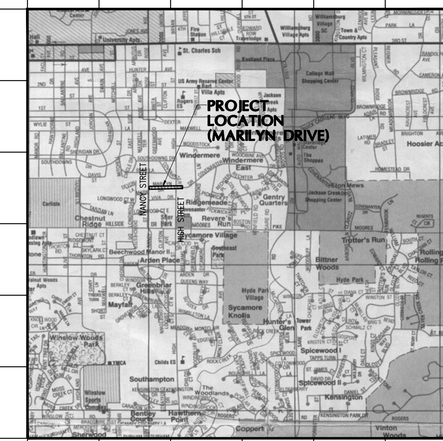

LOCATION MAP
SCALE: 1"=2000'

INDEX

SHEET NO.	DESCRIPTION
1	GENERAL NOTES AND LEGENDS
2-3	DEMOLITION PLAN
4-5	SITE PLAN
6-7	GRADING UTILITY & EROSION CONTROL PLAN AND DETAILS
8	MISCELLANEOUS DETAILS
9-11	PLAN AND PROFILE
12-15	CROSS SECTIONS

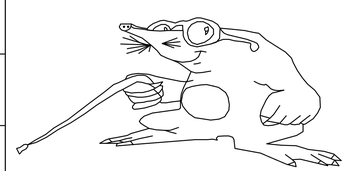

"Holey Moley" says,
"DON'T DIG BLIND"

Call Monday through Friday – 7 AM to 6 PM
1-800 382-5544 Within Indiana
1-800 428-5200 Outside Indiana

PER INDIANA STATE LAW IS-69-1991, IT IS AGAINST THE LAW TO EXCAVATE WITHOUT NOTIFYING THE UNDERGROUND LOCATION SERVICE TWO (2) WORKING DAYS BEFORE COMMENCING WORK.

BYNUM FANYO & ASSOCIATES, INC.

architecture
civil engineering
planning

528 North Walnut St. Bloomington, Indiana 47404 (812) 332-8030

OWNER/DEVELOPER
CITY OF BLOOMINGTON PUBLIC WORKS
401 NORTH MORTON STREET
BLOOMINGTON, INDIANA 47404

Note: All storm sewer and sanitary sewer pipe and structures on this project to be installed by others.

JEFFREY S. FANYO No. 18283 STATE OF INDIANA PROFESSIONAL ENGINEER

certified by:
JEFFREY S. FANYO, P.E.
IND. REG. NO. 18283
DRAWING DATE:

revisions

MARILYN STREET
JOB No. 400748

GENERAL LEGEND

PROPERTY LINE	
DEED BOOK AND PAGE	XXX/XXX
TO BE REMOVED	T.B.R.
TO REMAIN UNDISTURBED.	T.R.U.
EXISTING DECIDUOUS TREE	
EXISTING EVERGREEN TREE	
EXISTING TREE LINE	

SITE LEGEND

A	PROPOSED BITUMINOUS PAVING
R	PROPOSED CURB RAMP, TYPE "F"
C	CONCRETE DRIVE – 6" ON 6" COMPACTED AGGREGATE
F	CONCRETE SIDEWALK
F1	MONOLITHIC CONCRETE CURB AND SIDEWALK
F2	MONOLITHIC DEPRESSED CONCRETE CURB AND SIDEWALK
J	BITUMINOUS MIXTURE FOR APPROACHES
SG	SIDEWALK GROOVING REQUIRED
11	SAWCUT EXISTING SURFACE
26	SODDING OF DISTURBED GROUND
PP	BITUMINOUS PAVEMENT PATCH

SEE TYPICAL DETAILS (SHEET 8) FOR CLARIFICATION.

EROSION CONTROL LEGEND

SF	SILTATION FENCE (TEMPORARY)
GP	GRAVEL INLET PROTECTION (TO BE USED ON ALL CURB INLETS)
CL	PROPOSED CONSTRUCTION LIMITS

SEE EROSION CONTROL DETAILS (SHEET 7) FOR CLARIFICATION

UTILITIES

GAS
VECTREN
205 S. MADISON ST,
BLOOMINGTON, IN 47401
Doug Anderson (812) 330–4009

SEWER AND WATER
CITY OF BLOOMINGTON UTILITIES
501 N. MORTON STREET
BLOOMINGTON, IN 47401
Mike Bengtson (812)349–3653

ELECTRIC
CINERGY
1100 W. SECOND ST.
BLOOMINGTON, IN 47401
Kerry Ducker (812)337–3035

TELEPHONE
AMERITECH
P.O. BOX 56
BLOOMINGTON, IN 47402
Brent McCabe (812)334–4521

CABLE TELEVISION
INSIGHT COMMUNICATIONS
2450 SOUTH HENDERSON STREET
BLOOMINGTON, IN 47404
Scott Templeton (812)332–9486

UNDERGROUND UTILITY LOCATION
INDIANA UNDERGROUND
PLANT PROTECTION
1 – (800) 382 – 5544

EXISTING LEGEND

EXISTING FENCE	
EXISTING CONTOUR	XXX
FLOW LINE	
EXISTING OVERHEAD ELECTRIC AND TELEPHONE LINE POLE	
EXISTING ROADWAY SIGNAGE	
EXISTING MANHOLE	

UTILITY AND GRADING LEGEND

PROPOSED STORM PIPE AND INLET AND END SECTION	
PROPOSED CONTOUR	XXX
PROPOSED TOP OF CURB ELEVATION	XXX.XX
PROPOSED BOTTOM OF CURB ELEVATION	XXX.XX
PROPOSED SPOT GRADE ELEVATION	XXX.XX

NOTE: All Water, Storm Water and Sanitary Sewer construction shall be in accordance with the Construction Specifications for the City of Bloomington Utilities Wastewater, Water and Storm Projects.

Note: All storm sewer and sanitary sewer pipe and structures on this project to be installed by others.

GENERAL NOTES

☒ 1. BOUNDARY AND TOPO BY BYNUM FANYO AND ASSOCIATES, 528 NORTH WALNUT STREET, BLOOMINGTON, INDIANA 47404 (812) 332–8030

☒ 2. DEVELOPER: CITY OF BLOOMINGTON PUBLIC WORKS DEPT. 401 NORTH MORTON STREET, BLOOMINGTON, INDIANA 47404

☒ 3. PROJECT ADDRESS: MARILYN DRIVE & NANCY STREET, BLOOMINGTON, INDIANA

☒ 4. ALL WORK IS TO BE IN ACCORDANCE WITH ALL STATE AND LOCAL REGULATIONS.

☒ 5. ALL PERMITS ARE TO BE OBTAINED BY THE CONTRACTOR PRIOR TO THE START OF CONSTRUCTION.

☐ 6. HYDRANT LOCATION SHALL BE APPROVED BY THE LOCAL FIRE MARSHALL.

☒ 7. EXISTING UTILITIES ON SITE SHALL BE RELOCATED AS REQUIRED. CONTRACTOR SHALL PAY ALL COSTS ASSOCIATED WITH RELOCATION.

☒ 8. SAFE, CLEARLY MARKED PEDESTRIAN AND VEHICULAR ACCESS TO ALL ADJACENT PROPERTIES MUST BE MAINTAINED THROUGHOUT THE CONSTRUCTION PROCESS.

☒ 9. THE CONTRACTOR SHALL CONTACT DEREK NEFF AT THE CITY OF BLOOMINGTON FOR SIGN RELOCATION PRIOR TO COMMENCING CONSTRUCTION. CONSTRUCTION, 812.349.3452.

PARKING AND PAVEMENT NOTES

☒ 1. ALL SIGNS, PAVEMENT MARKINGS, AND OTHER TRAFFIC CONTROL DEVICES SHALL CONFORM TO THE MANUAL ON UNIFORM TRAFFIC DEVICES, 1988 EDITION AS AMENDED.

☒ 2. ALL PAVEMENT MARKINGS SHALL BE PAINTED WHITE ON ASPHALT PAVEMENT / YELLOW ON CONCRETE PAVEMENT AND SHALL BE FOUR (4) INCHES WIDE UNLESS INDICATED OTHERWISE.

☒ 3. ALL DIMENSIONS ARE TO EDGE OF PAVEMENT UNLESS INDICATED OTHERWISE. ALL CURB RADIUS ARE TO BE 5' UNLESS INDICATED OTHERWISE.

☒ 4. CONTRACTOR SHALL FURNISH AND INSTALL PAVEMENT MARKINGS AS SHOWN ON THE PLANS.

☒ 5. CONTRACTOR SHALL COORDINATE THE INSTALLATION OF ALL SIGNS, PAVEMENT MARKINGS, AND OTHER TRAFFIC CONTROL DEVICES WITH OTHER CONTRACTORS ON THE SITE.

☒ 6. JOINTS OR SCORE MARKS ARE TO BE SHARP AND CLEAN WITHOUT SHOWING EDGES OF JOINTING TOOLS.

☒ 7. CONTRACTOR SHALL SAW–CUT TIE–INS AT EXISTING CURBS AS NECESSARY TO INSURE SMOOTH TRANSITIONS. CONTRACTOR SHALL SAW–CUT AND TRANSITION TO MEET EXISTING PAVEMENT AS NECESSARY AND AS DIRECTED BY INSPECTOR TO INSURE POSITIVE DRAINAGE. (TYPICAL AT ALL INTERSECTIONS).

☒ 8. CONTRACTOR SHALL COMPLY WITH ALL PERTINENT PROVISIONS OF THE "MANUAL OF ACCIDENT PREVENTION IN CONSTRUCTION" ISSUED BY A.G.C. OF AMERICA, INC. AND THE HEALTH AND SAFETY REGULATIONS FOR CONSTRUCTION ISSUED BY THE U.S. DEPARTMENT OF LABOR.

ON-SITE UTILITY NOTES

☐ 1. ALL WATER PIPE 6" AND LARGER SHALL BE PRESSURE CLASS 350 DIP WATER PIPE CONFORMING TO ALL STATE AND LOCAL STANDARDS.

☐ 2. WATER MAIN FITTINGS 6" AND LARGER SHALL BE DUCTILE IRON CONFORMING TO AWWA/ANSI STANDARD SPECIFICATIONS C153/A21.53, LATEST REVISION.

☐ 3. 2" WATER MAINS SHALL BE SDR–21 (PR200) AND 4" PIPE MAY BE EITHER SDR–21 (PR200) OR C900 (DR–14).

☐ 4. ALL WATER SERVICE LINES CONNECTING TO 2" PVC MAINS SHALL BE 1" TYPE "K" COPPER. ALL SERVICE LINES FROM MAIN TO METER SHALL BE TYPE "K" COPPER WITH FLARED ENDS.

☐ 5. MECHANICAL RESTRAINTS SHALL BE PROVIDED AT ALL WATERLINE BENDS, OFFSETS, TEES, PLUGS, ETS...

☐ 6. ALL WATERLINE GATE VALVES OTHER THAN AIR RELEASE VALVES AND TAPPING VALVES SHALL BE CAST IRON BODY, FULLY BRONZE MOUNTED, WITH RESILIENT SEAT AND NON–RISING STEM AND SHALL BE MANUFACTURED BY M & H VALVE COMPANY, DARLING VALVE AND MANUFACTURING COMPANY, KENNEDY VALVE COMPANY, OR MUELLER COMPANY.

☐ 7. FLUSH HYDRANTS SHALL BE PLACED AT THE ENDS OF ALL WATER MAINS AND AT ANY HIGH POINTS IN THE LINE.

☐ 8. AIR RELEASE VALVES SHALL BE PROVIDED AT ALL HIGH POINTS OF WATER MAINS AND SHALL BE VAL–MATIC BRAND AND SHALL INCORPORATE THE OPTIONAL VACUUM–CHECK FEATURE.

☐ 9. ALL FIRE HYDRANTS SHALL BE MANUFACTURED BY KENNEDY GUARDIAN OR MUELLER CENTURION.

☐ 10. ALL WATER MAINS SHALL BE HYDROSTATICALLY TESTED AND DISINFECTED BEFORE ACCEPTANCE. SEE SITE WORK SPECIFICATIONS.

☐ 11. WATER AND SANITARY SEWER MAINS SHALL HAVE A MINIMUM COVER OF 4'–0" ABOVE TOP OF PIPE.

☐ 12. ALL SPRINKLER, DOMESTIC, AND SANITARY LEADS TO THE BUILDING SHALL END AS SHOWN ON PLAN AND SHALL BE PROVIDED WITH A TEMPORARY PLUG AT THE END (FOR OTHERS TO REMOVE AND EXTEND AS NECESSARY).

☒ 13. THE MINIMUM HORIZONTAL SEPARATION BETWEEN THE CLOSEST TWO POINTS OF THE WATER AND SEWER LINE IS TEN FEET (10'). THE MINIMUM VERTICAL SEPARATION BETWEEN THE CLOSEST TWO POINTS OF THE WATER AND SEWER LINE IS EIGHTEEN INCHES (18").

☐ 14. GRAVITY SANITARY SEWER PIPE 4" – 15" SHALL BE CONSTRUCTED OF SDR 35 PVC.

☐ 15. THE UPSTREAM ENDS OF ALL SANITARY SEWER LATERALS SHALL BE CLEARLY MARKED WITH A 4x4 TREATED POST EXTENDING 3' BELOW GRADE AND 1' ABOVE GRADE.

☒ 16. ALL TRENCHING, PIPE LAYING, AND BACKFILLING SHALL BE IN ACCORDANCE WITH FEDERAL OSHA REGULATIONS.

☒ 17. SEE SITE SPECIFICATIONS FOR BACKFILLING AND COMPACTION REQUIREMENTS.

☒ 18. SITE CONTRACTOR SHALL HAVE APPROVAL OF ALL GOVERNING AGENCIES HAVING JURISDICTION OVER THIS SYSTEM PRIOR TO INSTALLATION.

☒ 19. ALL WORK ON THIS PLAN SHALL BE DONE IN STRICT ACCORDANCE WITH SITE WORK SPECIFICATIONS.

☒ 20. ALL CATCH BASIN GRATE AND FRAMES ARE TO BE BY EAST JORDAN IRON WORKS.

☒ 21. LOCATIONS OF EXISTING BURIED UTILITY LINES SHOWN ON THE PLANS ARE BASED UPON BEST AVAILABLE INFORMATION AND ARE TO BE CONSIDERED APPROXIMATE. IT SHALL BE THE RESPONSIBILITY OF THE CONTRACTOR TO VERIFY THE LOCATIONS OF UTILITY LINES ADJACENT TO THE WORK AREA. THE CONTRACTOR IS RESPONSIBLE FOR THE PROTECTION OF ALL UTILITY LINES DURING THE CONSTRUCTION PERIOD.

GRADING NOTES

☒ 1. NEW FINISHED CONTOURS SHOWN ARE TOP OF FUTURE PAVING IN AREAS TO RECEIVE PAVEMENT AND TOP OF TOPSOIL IN AREAS TO BE SOD.

☒ 2. AREAS SHOWN TO BE SOD SHALL RECIEVE 4" OF TOPSOIL. THIS THIS TOPSOIL IS TO BE PLACED AND LEVELED BY THE CONTRACTOR.

☒ 3. CONTRACTOR SHALL NOTIFY AND COOPERATE WITH ALL UTILITY COMPANIES OR FIRMS HAVING FACILITIES ON OR ADJACENT TO THE SITE BEFORE DISTURBING, ALTERING, REMOVING, RELOCATION, ADJUSTING, OR CONNECTING TO SAID FACILITIES. CONTRACTOR SHALL PAY ALL COSTS IN CONNECTION WITH ALTERATION OF OR RELOCATION OF THE FACILITY.

☒ 4. ALL AREAS NOT COVERED BY BUILDING OR PAVING ARE TO BE GRASSED.

☒ 5. UNUSABLE EXCAVATED MATERIALS AND ALL WASTE RESULTING FROM CLEARING AND GRUBBING SHALL BE DISPOSED OF OFF SITE BY CONTRACTOR.

☒ 6. ALL EXCAVATING IS UNCLASSIFIED AND SHALL INCLUDE ALL MATERIALS ENCOUNTERED.

☒ 7. BEFORE ANY MACHINE WORK IS DONE, CONTRACTOR SHALL STAKE OUT AND MARK THE ITEMS ESTABLISHED BY THE SITE PLAN. CONTROL POINTS SHALL BE PRESERVED AT ALL TIMES DURING THE COURSE OF CONSTRUCTION. THE LACK OF PROPER WORKING POINTS AND GRADE STAKES MAY REQUIRE CESSATION OF OPERATIONS UNTIL SUCH POINTS AND GRADES HAVE BEEN PLACED TO THE OWNER'S SATISFACTION.

☐ 8. CONTRACTOR SHALL COMPACT AND MAINTAIN A 30,000 SQ. FT. STONEBASE CONSTRUCTION LAYDOWN AREA W/ STONE ACCESS FROM THE CONSTRUCTION ENTRANCE AND STONE ACCESS TO THE BUILDING PAD.

☒ 9. THESE DOCUMENTS ARE SCHEMATIC IN NATURE AND CANNOT SHOW EVERY ITEM NEEDED FOR A COMPLETE OPERATIONAL STORM SYSTEM. THE CONTRACTOR SHALL BE RESPONSIBLE FOR PROVIDING A COMPLETE OPERATING STORM SYSTEM.

☒ 10. ALL FILL SHALL BE FREE OF VEGETABLE MATTER, RUBBISH, LARGE ROCK, AND OTHER DELETERIOUS MATERIAL. THE FILL MATERIAL SHOULD BE PLACED IN LAYERS NOT TO EXCEED SIX (6) INCHES IN LOOSE THICKNESS AND SHOULD BE SPRINKLED WITH WATER AS REQUIRED TO SECURE SPECIFIED COMPACTION. EACH LAYER SHOULD BE UNIFORMLY COMPACTED BY MEANS OF SUITABLE EQUIPMENT AS DICTATED BY THE TYPE OF FILL MATERIAL. UNDER NO CIRCUMSTANCES SHOULD A BULLDOZER OR SIMILARLY TRACKED VEHICLE BE USED AS COMPACTING EQUIPMENT. MATERIAL CONTAINING AN EXCESS OF WATER SHOULD BE SPREAD AND DRIED TO A MOISTURE CONTENT THAT WILL PERMIT PROPER COMPACTION. ALL FILL SHOULD BE COMPACTED TO THE SPECIFIED PERCENTAGE OF THE MAXIMUM DENSITY OBTAINED IN ACCORDANCE WITH ASTM DENSITY TEST D–1557 (95 PERCENT OF MAXIMUM DRY DENSITY). IF THE SPECIFIED COMPACTION LIMITS ARE NOT MET, SUCH AREAS SHOULD BE REWORKED AND RETESTED AS REQUIRED UNTIL THE SPECIFIED LIMITS ARE REACHED.

☒ EROSION CONTROL NOTES

1. Prior to any earth moving place siltation fence along the down stream side of all grading activity.
2. Remove vegetation in areas to be disturbed only.
3. Strip top soil from all areas to be disturbed by construction and stock pile at locations above silt fence. Seed with temporary seed mixture type 1, immediately.
4. Maintain silt fence during construction and keep clear of debris.
5. Perform construction activities as shown on the plans. Do not disturb turf areas outside of construction limits so that turf acts as a vegetative filter strip.
6. All erosion control structures shall be kept in working order and inspected upon completion of every rain event. Add additional measures when necessary.
7. Any disturbed area left bare for more than 15 days shall be temporarily seeded.
8. Upon completion of construction of all improvements redistribute top soil to all proposed grassed areas.
9. Sod all disturbed areas immediately upon completion of all earthmoving and underground utility work in accordance with INDOT specifications.
10. Fertilize and water seeded areas until mature turf is established.
11. Remove all temporary erosion control measures upon the establishment of the turf.

LANDSCAPE NOTES

☐ 1. ALL PLANTS MUST BE HEALTHY, VIGOROUS MATERIAL, FREE OF PESTS AND DISEASE.

☐ 2. ALL PLANTS MUST BE CONTAINER GROWN OR BALLED AND BURLAPPED AS INDICATED IN THE PLANT LIST.

☐ 3. ALL TREES MUST BE STRAIGHT TRUNKED, FULL HEADED AND MEET ALL REQUIREMENTS SPECIFIED.

☐ 4. ALL PLANTS ARE SUBJECT TO THE APPROVAL OF THE OWNER BEFORE, DURING, AND AFTER INSTALLATION.

☐ 5. ALL TREES MUST BE GUYED OR STAKED AS SHOWN IN THE DETAILS.

☐ 6. ALL PLANTING AREAS MUST BE COMPLETELY MULCHED WHERE SPECIFIED.

☒ 7. PRIOR TO CONSTRUCTION, THE CONTRACTOR SHALL BE RESPONSIBLE FOR LOCATING ALL UNDERGROUND UTILITIES AND SHALL AVOID DAMAGE TO ALL UTILITIES DURING THE COURSE OF THE WORK. THE CONTRACTOR IS RESPONSIBLE FOR REPAIRING ANY AND ALL DAMAGE TO UTILITIES, STRUCTURES, SITE APPURTENANCES, ETC. WHICH OCCURS AS A RESULT OF THE LANDSCAPE CONSTRUCTION.

☐ 8. THE CONTRACTOR IS RESPONSIBLE FOR VERIFYING ALL QUANTITIES SHOWN ON THESE PLANS BEFORE PRICING THE WORK.

☒ 9. THE CONTRACTOR IS RESPONSIBLE FOR FULLY MAINTAINING ALL PLANTING (INCLUDING BUT NOT LIMITED TO: WATERING, SPRAYING, MULCHING, FERTILIZING, ETC.) OF THE PLATING AREAS AND LAWN UNTIL THE WORK IS ACCEPTED IN TOTAL BY THE OWNER.

☒ 10. THE CONTRACTOR SHALL COMPLETELY GUARANTEE ALL PLANT MATERIAL FOR A PERIOD OF ONE (1) YEAR BEGINNING ON THE DATE OF TOTAL ACCEPTANCE. THE CONTRACTOR SHALL PROMPTLY MAKE ALL REPLACEMENTS BEFORE OR AT THE END OF THE GUARANTEE PERIOD.

☐ 11. THE OWNER SHALL APPROVE THE STAKING LOCATION OF ALL PLANT MATERIAL PRIOR TO INSTALLATION.

☐ 12. AFTER BEING DUG AT THE NURSERY SOURCE, ALL TREES IN LEAF SHALL BE ACCLIMATED FOR TWO (2) WEEKS UNDER A MIST SYSTEM PRIOR TO INSTALLATION.

☒ 13. ANY PLANT MATERIAL WHICH DIES, TURNS BROWN, OR DEFOLIATES (PRIOR TO TOTAL ACCEPTANCE OF THE WORK) SHALL BE PROMPTLY REMOVED FROM THE SITE AND REPLACED WITH MATERIAL OF THE SAME SPECIES, QUANTITY, AND SIZE AND MEETING ALL PLANT LIST SPECIFICATIONS.

☒ 14. STANDARDS SET FORTH IN "AMERICAN STANDARD FOR NURSERY STOCK" REPRESENT GUIDELINE SPECIFICATIONS ONLY AND SHALL CONSTITUTE MINIMUM QUALITY REQUIREMENTS FOR PLANT MATERIAL.

☐ 15. ALL SHRUB, GROUND COVER AND SEASONAL COLOR ANNUAL PLANTING BEDS ARE TO BE COMPLETELY COVERED WITH HARDWOOD MULCH TO A MINIMUM DEPTH OF FOUR INCHES.

☐ 16. DURING THE GROWING SEASON ALL ANNUALS SHALL REMAIN IN A HEALTHY, VITAL CONDITION THROUGHOUT THE CONSTRUCTION PERIOD.

☐ 17. ALL PLANT MATERIALS QUANTITIES SHOWN ARE APPROXIMATE. CONTRACTOR SHALL BE RESPONSIBLE FOR COMPLETE COVERAGE OF ALL PLANTING BEDS AT SPACING SHOWN.

☒ 19. ALL DISTURBED AREAS ARE TO RECEIVE 4" OF TOP SOIL, SOD AND WATERED UNTIL A HEALTHY STAND OF GRASS IS OBTAINED. THIS IS EXCLUDING ALL LANDSCAPED ISLANDS AND ENTRANCE AREAS.

NOTE: ONLY NOTES ON THIS SHEET MARKED WITH AN "X" APPLY TO THIS PROJECT.

☒ NOTE: CONTRACTOR SHALL VERIFY ALL UTILITY LOCATIONS & DEPTHS AND NOTIFY ENGINEER OF ANY INACCURACIES IN LOCATION OR ELEVATION OR ANY CONFLICTS PRIOR TO & AFTER ANY EXCAVATION. NO PAYMENT SHALL BE MADE TO CONTRACTOR FOR UTILITY DESTRUCTION OR UNDERGROUND CHANGES REQUIRED DUE TO CONFLICTING ELEVATIONS.

revisions:

ARCHITECTURE
CIVIL ENGINEERING
PLANNING
BYNUM FANYO & ASSOCIATES, INC.
528 north walnut street
bloomington, indiana
(812) 332–8030
(812) 339–2990 (Fax)

JEFFREY S. FANYO No. 18283 STATE OF INDIANA PROFESSIONAL ENGINEER
1-5-17
certified by:

Proposed:
MARILYN DRIVE IMPROVEMENTS
From Nancy Street to High Street
Bloomington Indiana

title: GENERAL NOTES & LEGENDS

designed by: RC
drawn by: JR
sheet no: 1 OF 15
project no.: 400748

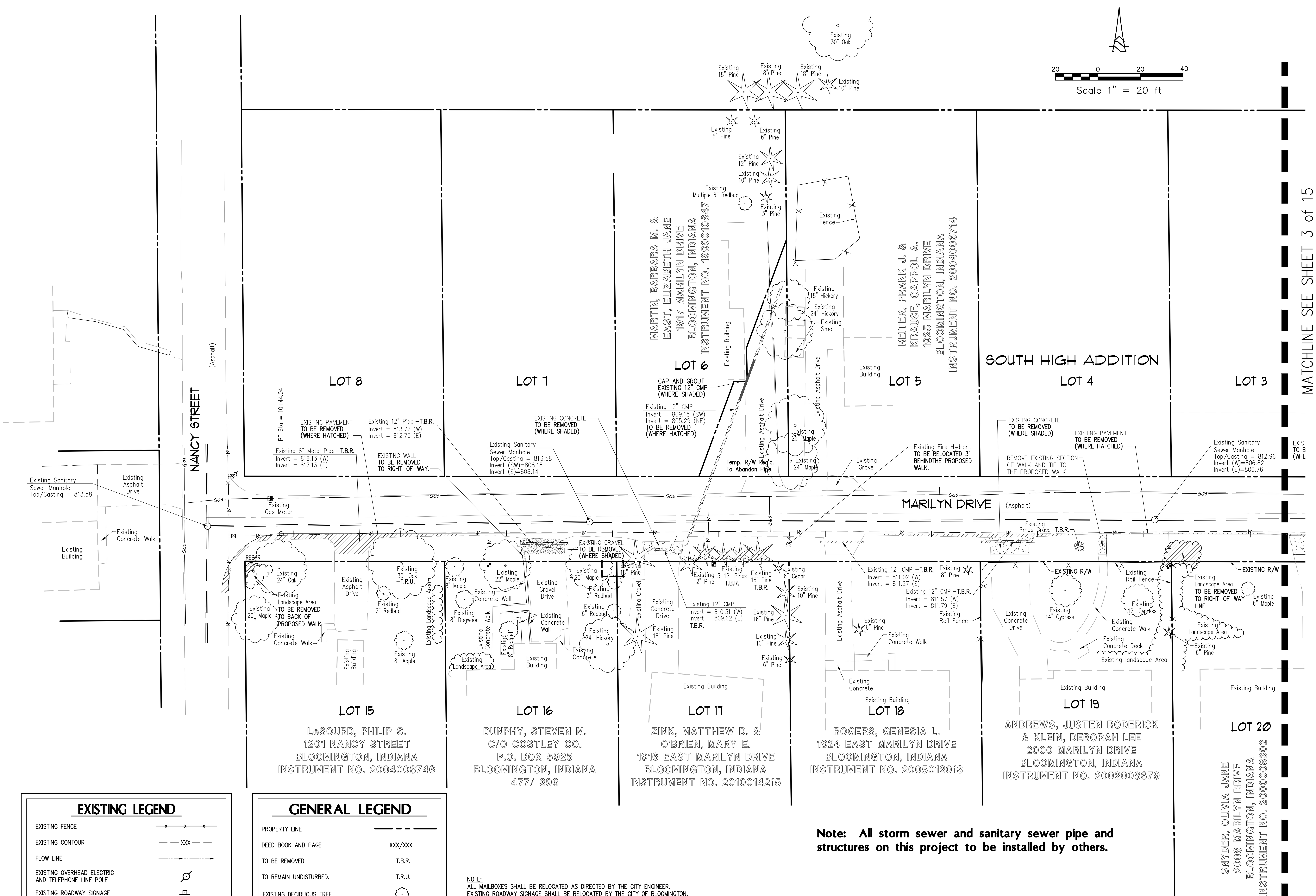

EXISTING LEGEND

EXISTING FENCE	—x—x—x—
EXISTING CONTOUR	— — XXX — —
FLOW LINE	—··→—··→
EXISTING OVERHEAD ELECTRIC AND TELEPHONE LINE POLE	
EXISTING ROADWAY SIGNAGE	
EXISTING MANHOLE	

GENERAL LEGEND

PROPERTY LINE	
DEED BOOK AND PAGE	XXX/XXX
TO BE REMOVED	T.B.R.
TO REMAIN UNDISTURBED.	T.R.U.
EXISTING DECIDUOUS TREE	
EXISTING EVERGREEN TREE	
EXISTING TREE LINE	

NOTE:
ALL MAILBOXES SHALL BE RELOCATED AS DIRECTED BY THE CITY ENGINEER.
EXISTING ROADWAY SIGNAGE SHALL BE RELOCATED BY THE CITY OF BLOOMINGTON.
CONTACT DEREK NEFF FOR INFORMATION.
MAILBOX AND SIGN RELOCATION SHALL BE INCLUDED AS PART OF CLEARING RIGHT-OF-WAY.

Note: All storm sewer and sanitary sewer pipe and structures on this project to be installed by others.

BENCHMARKS

1 REBAR
N=4963.8957
E=4390.8822
ELEVATION=820.0284

NOTE: CONTRACTOR SHALL VERIFY ALL UTILITY LOCATIONS & DEPTHS AND NOTIFY ENGINEER OF ANY INACCURACIES IN LOCATION OR ELEVATION OR ANY CONFLICTS PRIOR TO & AFTER ANY EXCAVATION. NO PAYMENT SHALL BE MADE TO CONTRACTOR FOR UTILITY DESTRUCTION OR UNDERGROUND CHANGES REQUIRED DUE TO CONFLICTING ELEVATIONS.

revisions:

ARCHITECTURE
CIVIL ENGINEERING
PLANNING
BYNUM FANYO & ASSOCIATES, INC.
528 north walnut street
bloomington, indiana
(812) 332-8030
(812) 339-2990 (Fax)

JEFFREY S. FANYO
No. 18283
STATE OF
PROFESSIONAL ENGINEER
1-5-16
certified by:

Proposed:
MARILYN DRIVE IMPROVEMENTS
From Nancy Street to High Street
Bloomington Indiana

title: DEMOLITION PLAN

designed by: RC
drawn by: JR
sheet no: 2 OF 15
project no.: 400748

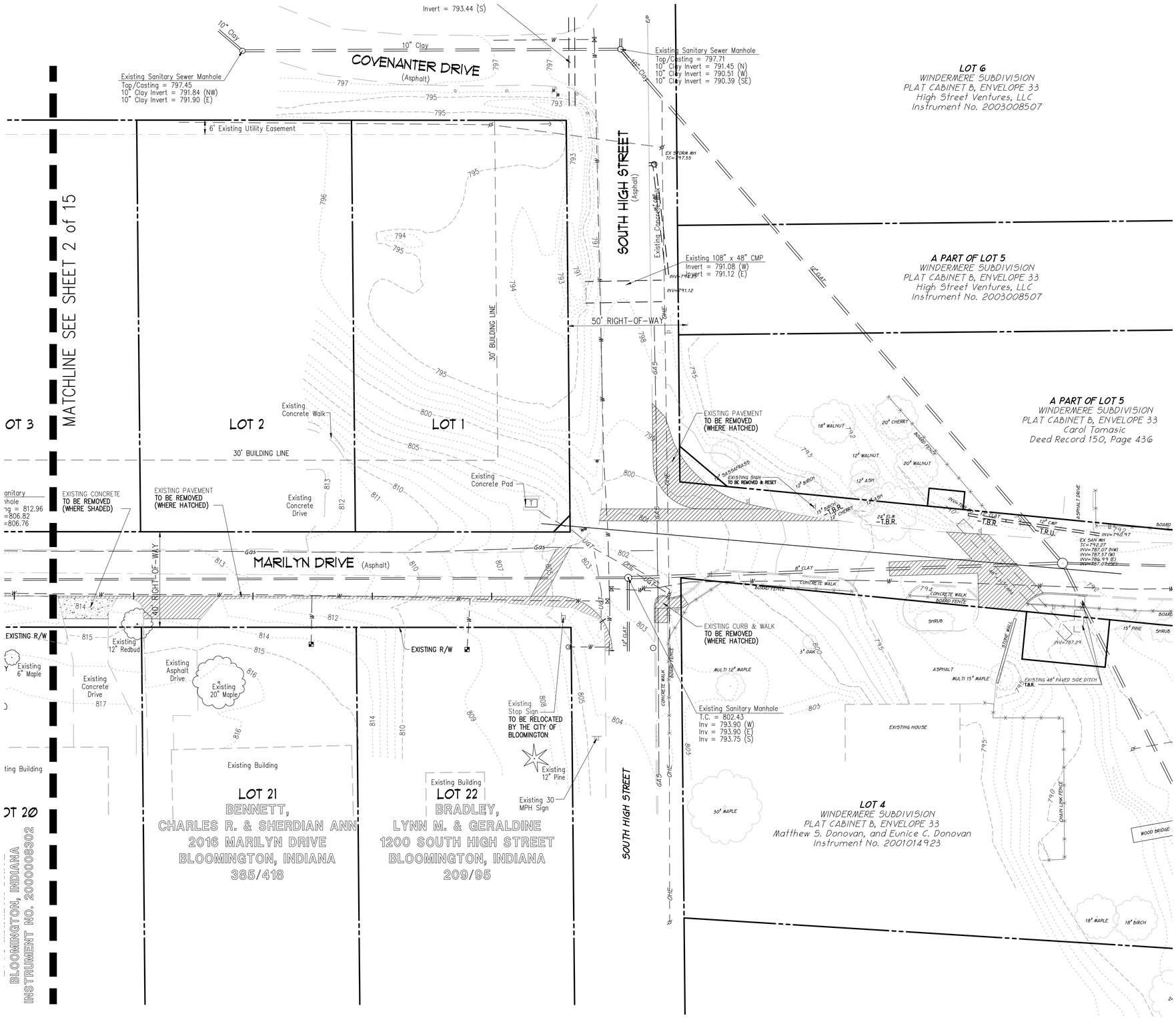

Scale 1" = 20 ft

GENERAL LEGEND

PROPERTY LINE	
DEED BOOK AND PAGE	XXX/XXX
TO BE REMOVED	T.B.R.
TO REMAIN UNDISTURBED.	T.R.U.
EXISTING DECIDUOUS TREE	
EXISTING EVERGREEN TREE	
EXISTING TREE LINE	

EXISTING LEGEND

EXISTING FENCE	
EXISTING CONTOUR	XXX
FLOW LINE	
EXISTING OVERHEAD ELECTRIC AND TELEPHONE LINE POLE	
EXISTING ROADWAY SIGNAGE	
EXISTING MANHOLE	

NOTE:
ALL MAILBOXES SHALL BE RELOCATED AS DIRECTED BY THE CITY ENGINEER.
EXISTING ROADWAY SIGNAGE SHALL BE RELOCATED BY THE CITY OF BLOOMINGTON.
CONTACT DEREK NEFF FOR INFORMATION.
MAILBOX AND SIGN RELOCATION SHALL BE INCLUDED AS PART OF CLEARING RIGHT-OF-WAY.

BENCHMARKS

2 WATER VALVE
N=4971.1822
E=5105.5526
ELEVATION=802.8570

Note: All storm sewer and sanitary sewer pipe and structures on this project to be installed by others.

NOTE: CONTRACTOR SHALL VERIFY ALL UTILITY LOCATIONS & DEPTHS AND NOTIFY ENGINEER OF ANY INACCURACIES IN LOCATION OR ELEVATION OR ANY CONFLICTS PRIOR TO & AFTER ANY EXCAVATION. NO PAYMENT SHALL BE MADE TO CONTRACTOR FOR UTILITY DESTRUCTION OR UNDERGROUND CHANGES REQUIRED DUE TO CONFLICTING ELEVATIONS.

revisions:

ARCHITECTURE
CIVIL ENGINEERING
PLANNING
BYNUM FANYO & ASSOCIATES, INC.
528 north walnut street
bloomington, indiana
(812) 332-8030
(812) 339-2990 (Fax)

JEFFREY S. FANYO
No. 18283
STATE OF INDIANA
PROFESSIONAL ENGINEER
1-5-1
certified by:

Proposed:
MARILYN DRIVE IMPROVEMENTS
From Nancy Street to High Street
Bloomington Indiana

title: DEMOLITION PLAN

designed by: RC
drawn by: JR
sheet no: 3 OF 15
project no.: 400748

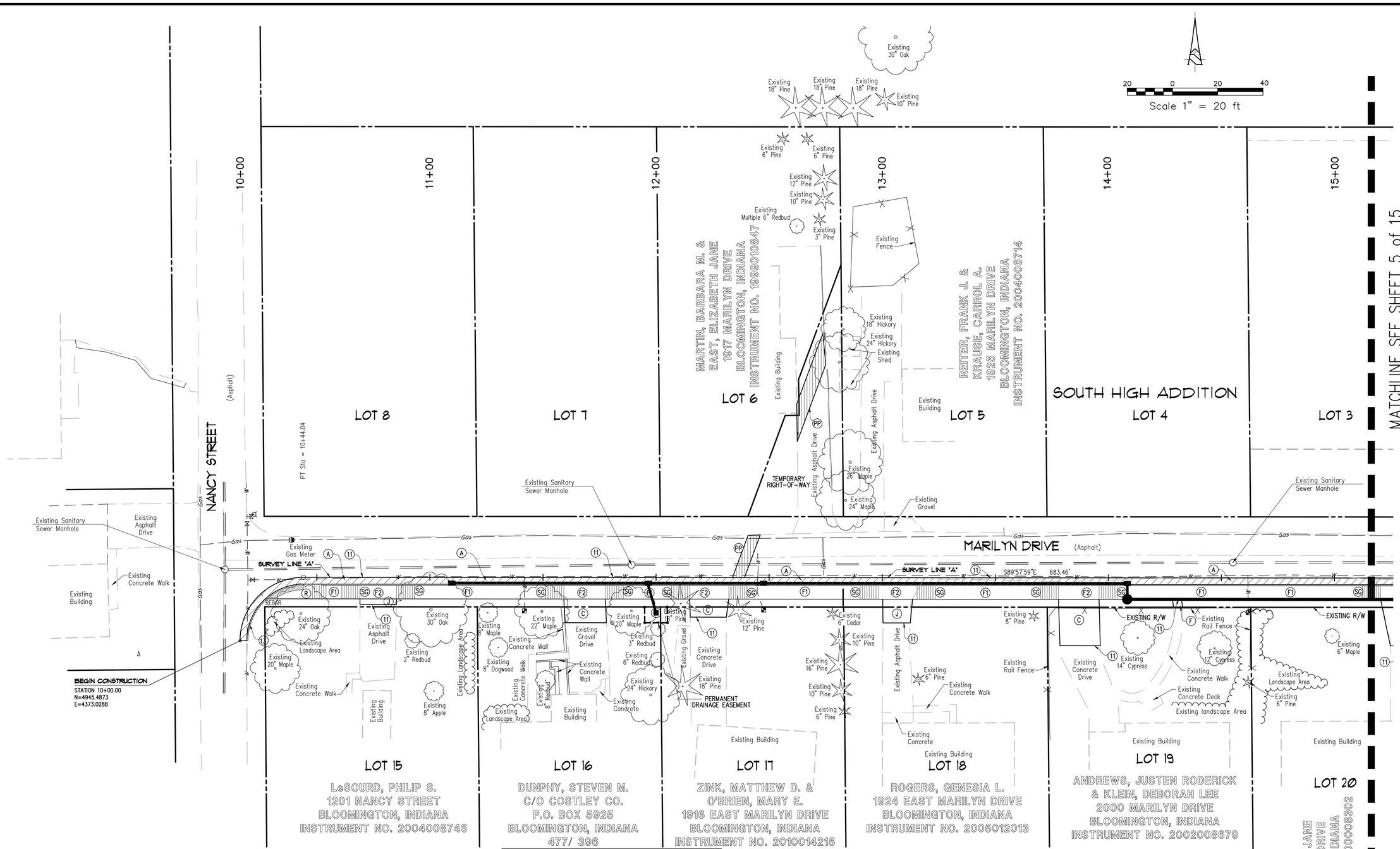

EXISTING LEGEND

EXISTING FENCE	
EXISTING CONTOUR	XXX
FLOW LINE	
EXISTING OVERHEAD ELECTRIC AND TELEPHONE LINE POLE	
EXISTING ROADWAY SIGNAGE	
EXISTING MANHOLE	

GENERAL LEGEND

PROPERTY LINE	
DEED BOOK AND PAGE	XXX/XXX
TO BE REMOVED	T.B.R.
TO REMAIN UNDISTURBED.	T.R.U.
EXISTING DECIDUOUS TREE	
EXISTING EVERGREEN TREE	
EXISTING TREE LINE	

SITE LEGEND

A	PROPOSED BITUMINOUS PAVING
R	PROPOSED CURB RAMP, TYPE "F"
C	CONCRETE DRIVE – 6" ON 6" COMPACTED AGGREGATE
F	CONCRETE SIDEWALK
F1	MONOLITHIC CONCRETE CURB AND SIDEWALK
F2	MONOLITHIC DEPRESSED CONCRETE CURB AND SIDEWALK
J	BITUMINOUS MIXTURE FOR APPROACHES
SG	SIDEWALK GROOVING REQUIRED
11	SAWCUT EXISTING SURFACE
13	Concrete Curb – 8"
26	SODDING OF DISTURBED GROUND
PP	BITUMINOUS PAVEMENT PATCH

SEE TYPICAL DETAILS (SHEET 8) FOR CLARIFICATION.

Note: All storm sewer and sanitary sewer pipe and structures on this project to be installed by others.

NOTE:
ALL MAILBOXES SHALL BE RELOCATED AS DIRECTED BY THE CITY ENGINEER.
EXISTING ROADWAY SIGNAGE SHALL BE RELOCATED BY THE CITY OF BLOOMINGTON.
CONTACT DEREK NEFF FOR INFORMATION.
MAILBOX AND SIGN RELOCATION SHALL BE INCLUDED AS PART OF CLEARING RIGHT-OF-WAY.

NOTE:
THE CITY OF BLOOMINGTON WILL OBTAIN RIGHT OF ENTRIES FOR ALL PROPERTIES AFFECTED BY THE CONSTRUCTION, UNLESS OTHERWISE NOTED.

BENCHMARKS

1 REBAR
N=4963.8957
E=4390.8822
ELEVATION=820.0284

NOTE: CONTRACTOR SHALL VERIFY ALL UTILITY LOCATIONS & DEPTHS AND NOTIFY ENGINEER OF ANY INACCURACIES IN LOCATION OR ELEVATION OR ANY CONFLICTS PRIOR TO & AFTER ANY EXCAVATION. NO PAYMENT SHALL BE MADE TO CONTRACTOR FOR UTILITY DESTRUCTION OR UNDERGROUND CHANGES REQUIRED DUE TO CONFLICTING ELEVATIONS.

revisions:

ARCHITECTURE
CIVIL ENGINEERING
PLANNING
BYNUM FANYO & ASSOCIATES, INC.
528 north walnut street
(812) 332-8030
bloomington, indiana
(812) 339-2990 (Fax)

JEFFREY S. FANYO No. 18283 STATE OF PROFESSIONAL ENGINEER
1-5-17
certified by:

Proposed:
MARILYN DRIVE IMPROVEMENTS
From Nancy Street to High Street
Bloomington Indiana

title: SITE PLAN

designed by: RC
drawn by: JR
sheet no: 4 OF 15
project no.: 400748

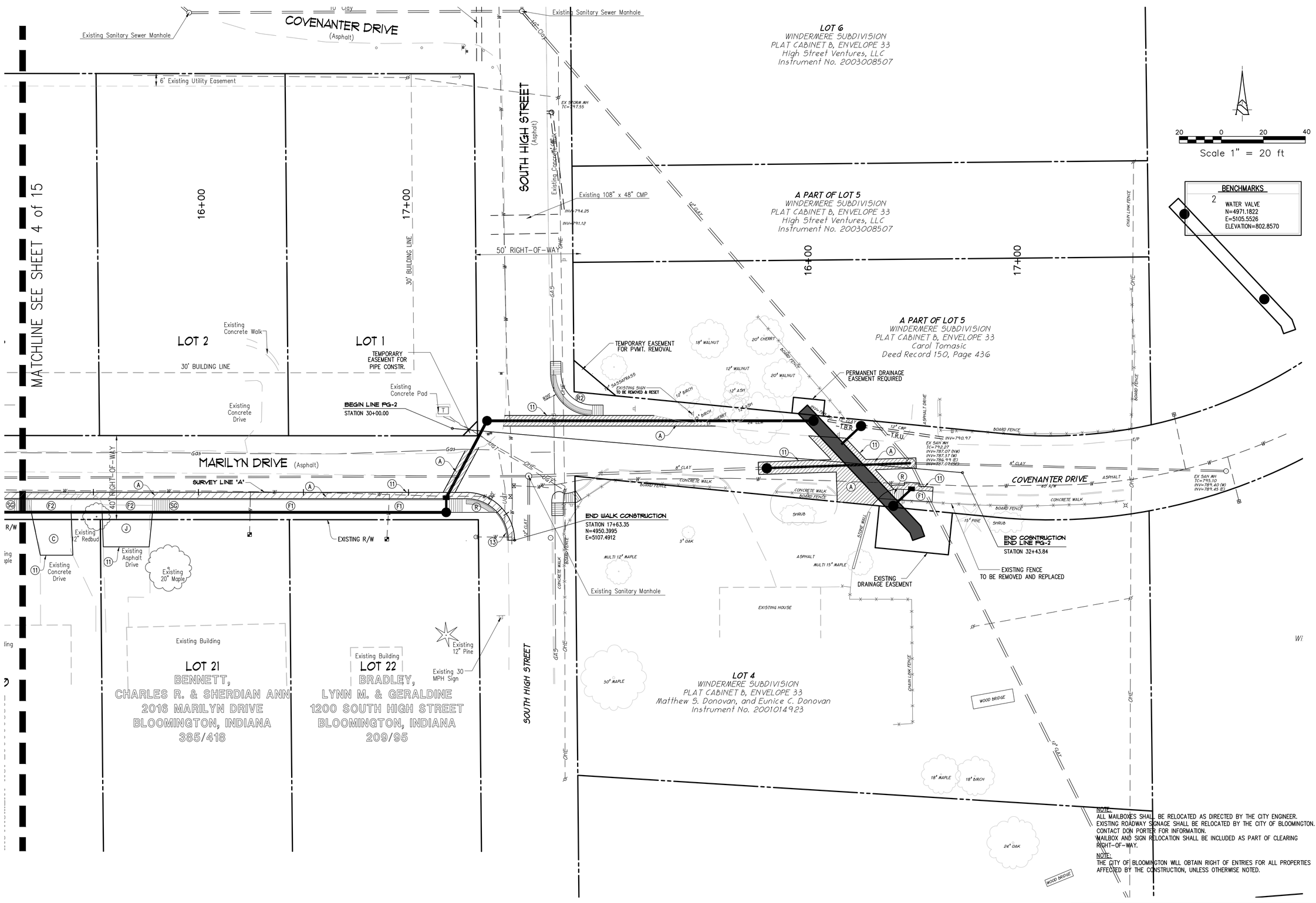

NOTE:
ALL MAILBOXES SHALL BE RELOCATED AS DIRECTED BY THE CITY ENGINEER.
EXISTING ROADWAY SIGNAGE SHALL BE RELOCATED BY THE CITY OF BLOOMINGTON.
CONTACT DON PORTER FOR INFORMATION.
MAILBOX AND SIGN RELOCATION SHALL BE INCLUDED AS PART OF CLEARING RIGHT-OF-WAY.

NOTE:
THE CITY OF BLOOMINGTON WILL OBTAIN RIGHT OF ENTRIES FOR ALL PROPERTIES AFFECTED BY THE CONSTRUCTION, UNLESS OTHERWISE NOTED.

Note: All storm sewer and sanitary sewer pipe and structures on this project to be installed by others.

NOTE: CONTRACTOR SHALL VERIFY ALL UTILITY LOCATIONS & DEPTHS AND NOTIFY ENGINEER OF ANY INACCURACIES IN LOCATION OR ELEVATION OR ANY CONFLICTS PRIOR TO & AFTER ANY EXCAVATION. NO PAYMENT SHALL BE MADE TO CONTRACTOR FOR UTILITY DESTRUCTION OR UNDERGROUND CHANGES REQUIRED DUE TO CONFLICTING ELEVATIONS.

revisions:

ARCHITECTURE
CIVIL ENGINEERING
PLANNING
BYNUM FANYO & ASSOCIATES, INC.
528 north walnut street
bloomington, indiana
(812) 332-8030
(812) 339-2990 (Fax)

JEFFREY S. FANYO
No. 18283
STATE OF
PROFESSIONAL ENGINEER
1-5-17
certified by:

Proposed:
MARILYN DRIVE IMPROVEMENTS
From Nancy Street to High Street
Bloomington Indiana

title: SITE PLAN AND DETAILS

designed by: RC
drawn by: JR
sheet no: 5 OF 15
project no.: 400748

Note: All storm sewer and sanitary sewer pipe and structures on this project to be installed by others.

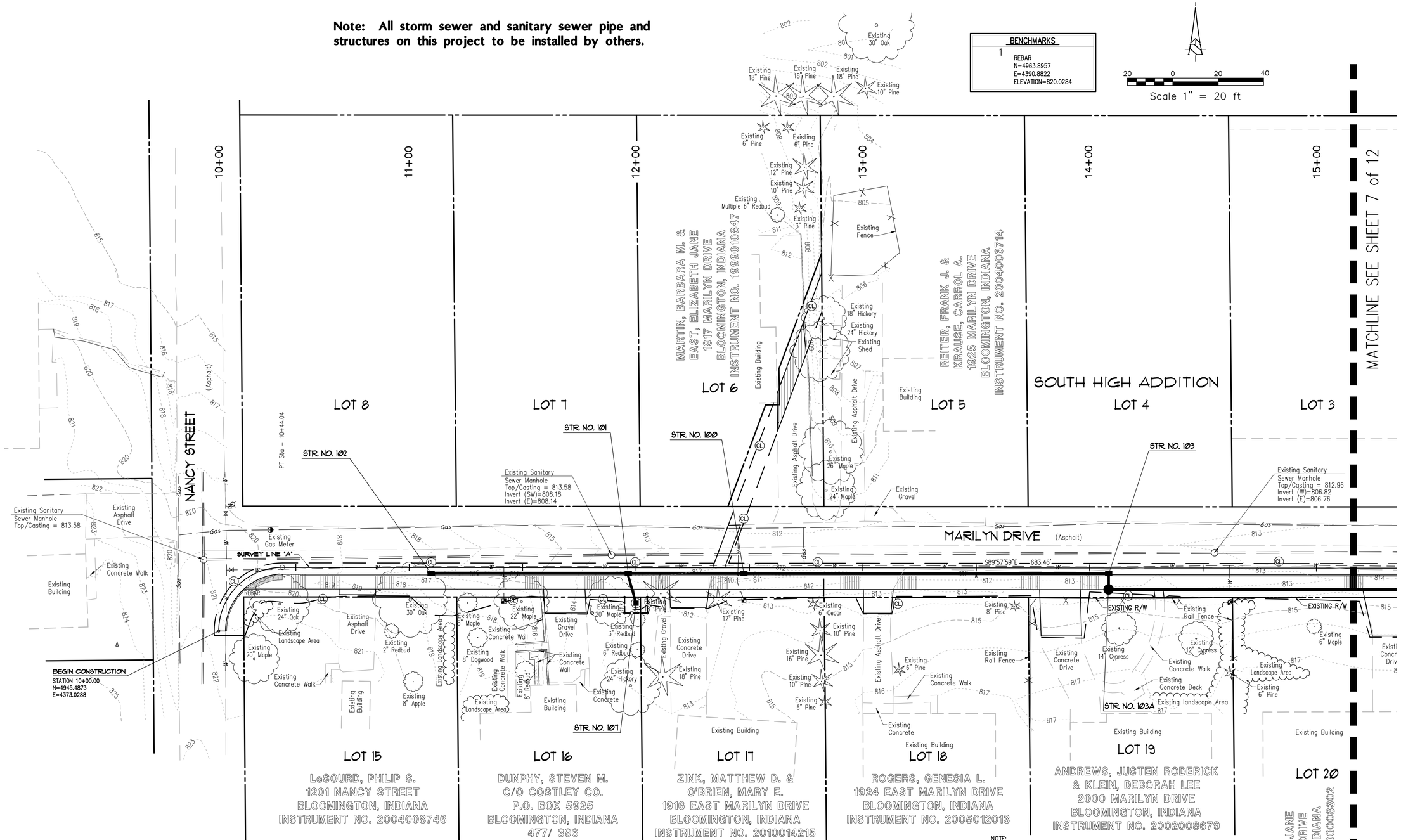

GENERAL LEGEND

PROPERTY LINE	
DEED BOOK AND PAGE	XXX/XXX
TO BE REMOVED	T.B.R.
TO REMAIN UNDISTURBED.	T.R.U.
EXISTING DECIDUOUS TREE	
EXISTING EVERGREEN TREE	
EXISTING TREE LINE	

EXISTING LEGEND

EXISTING FENCE	
EXISTING CONTOUR	XXX
FLOW LINE	
EXISTING OVERHEAD ELECTRIC AND TELEPHONE LINE POLE	
EXISTING ROADWAY SIGNAGE	
EXISTING MANHOLE	

UTILITY AND GRADING LEGEND

PROPOSED STORM PIPE AND INLET AND END SECTION	
PROPOSED CONTOUR	XXX
PROPOSED TOP OF CURB ELEVATION	XXX.XX
PROPOSED BOTTOM OF CURB ELEVATION	XXX.XX
PROPOSED SPOT GRADE ELEVATION	XXX.XX

NOTE: ALL WATER AND SEWER CONSTRUCTION SHALL BE IN ACCORDANCE WITH THE CITY OF BLOOMINGTON UTILITY SPECIFICATIONS.

EROSION CONTROL LEGEND

SF	SILTATION FENCE (TEMPORARY)
GP	GRAVEL INLET PROTECTION (TO BE USED ON ALL CURB INLETS)
CL	PROPOSED CONSTRUCTION LIMITS

SEE EROSION CONTROL DETAILS (SHEET 7) FOR CLARIFICATION

NOTE:
ADJUSTMENT OF WATER AND SANITARY SEWER SERVICES MAY BE REQUIRED FOR STORM SEWER INSTALLATION. A MINIMUM 18" VERTICAL SEPARATION SHALL BE MAINTAINED BETWEEN ALL SERVICE LATERALS AND THE PROPOSED STORM SEWER LINE. CHANGE ORDERS WILL NOT BE ISSUED FOR RELOCATION OF EXISTING SERVICE LINES. THE CONTRACTOR SHALL INCLUDE THIS WORK IN THEIR BID PRICE.

NOTE:
12" SECTIONS OF 6" P.V.C. SHALL BE INSTALLED, IN THE WALK FLUSH WITH THE SURFACE, AT ALL MAILBOX LOCATIONS. THEY SHALL BE LOCATED AS DIRECTED BY THE POSTMASTER AND CITY ENGINEER'S OFFICE.

NOTE:
ALL YARD AND ROOF DRAIN LINES ENCOUNTERED IN THE TEMPORARY OR PERMANENT RIGHT-OF-WAY SHALL BE CONNECTED TO THE NEAREST DOWNSTREAM STORM STRUCTURE. THIS MAY ALSO BE NECESSARY IN AREAS WHERE THE NEW SIDEWALK GRADE IS HIGHER THAN THE EXISTING PARCEL AND EXTENSIVE PONDING ON THE PROPERTY MAY BECOME PROBLEMATIC. THESE SITUATIONS WILL BE DETERMINED ON A CASE BY CASE BASIS DURING CONSTRUCTION.

NOTE: CONTRACTOR SHALL VERIFY ALL UTILITY LOCATIONS & DEPTHS AND NOTIFY ENGINEER OF ANY INACCURACIES IN LOCATION OR ELEVATION OR ANY CONFLICTS PRIOR TO & AFTER ANY EXCAVATION. NO PAYMENT SHALL BE MADE TO CONTRACTOR FOR UTILITY DESTRUCTION OR UNDERGROUND CHANGES REQUIRED DUE TO CONFLICTING ELEVATIONS.

revisions:

ARCHITECTURE
CIVIL ENGINEERING
PLANNING
BYNUM FANYO & ASSOCIATES, INC.
528 north walnut street
bloomington, indiana
(812) 332-8030
(812) 339-2990 (Fax)

JEFFREY S. FANYO
No. 18283
STATE OF INDIANA
PROFESSIONAL ENGINEER
1-5-
certified by

Proposed:
MARILYN DRIVE IMPROVEMENTS
From Nancy Street to High Street
Bloomington Indiana

title: UTILITY AND EROSION CONTROL PLAN

designed by: RC
drawn by: JR
sheet no: 6 OF 15
project no.: 400748

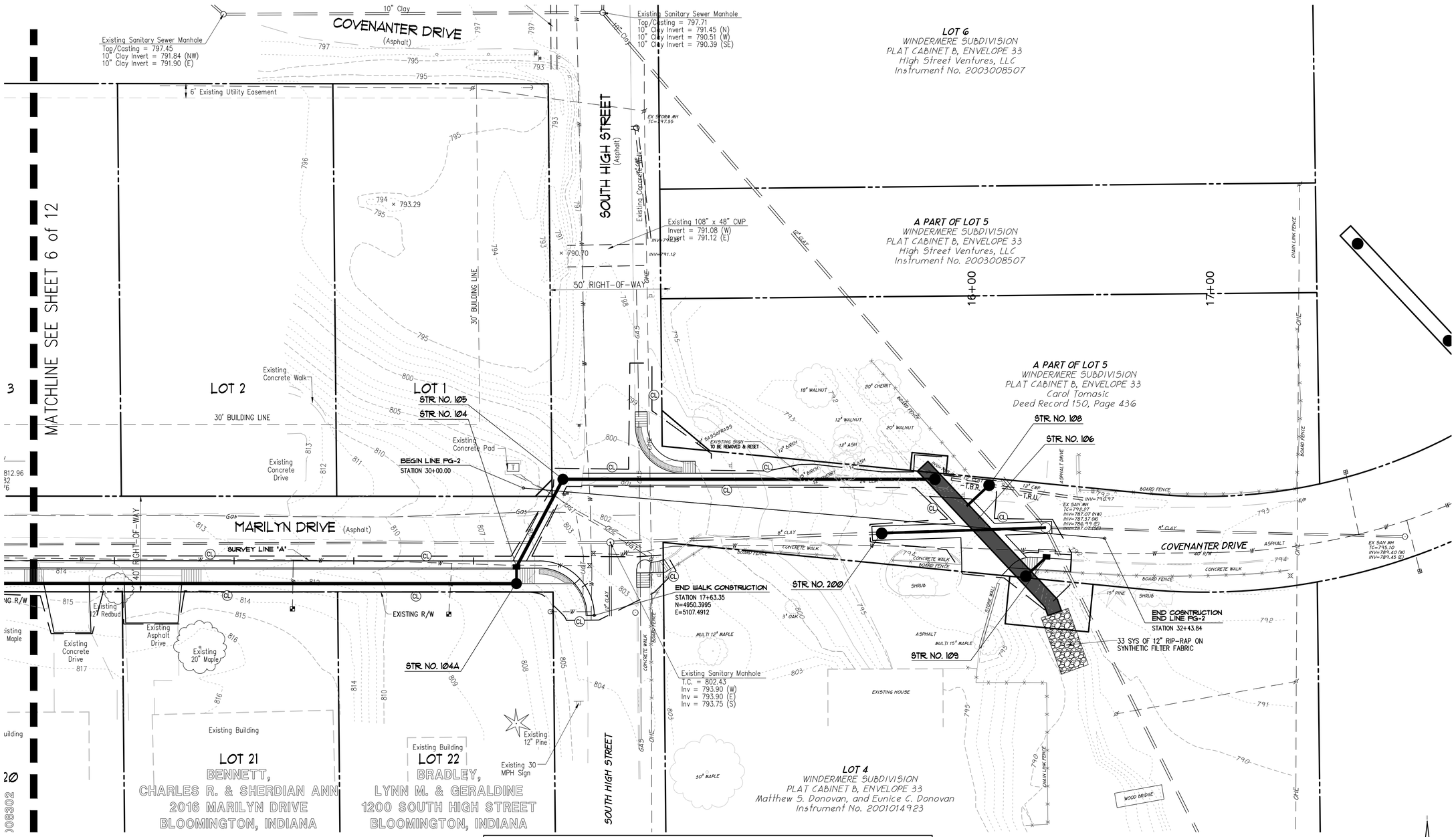

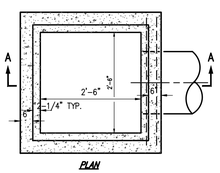

PLAN

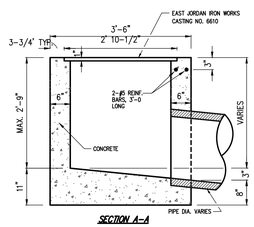

SECTION A-A

NOTES:
1. ALL PRECAST MANHOLES SHALL CONFORM TO ASTM C-478 AND THE STANDARD SPECIFICATIONS (MIN. 50 FT. OF REINFORCING STEEL PER LINEAR FOOT OF BARREL SHALL 0.12).
2. JOINTS BETWEEN SECTIONS OF PRECAST MANHOLES SHALL BE IN ACCORDANCE WITH ASTM C-443.

STORM INLET, INDOT TYPE "E"
NOT TO SCALE

STRUCTURE DATA TABLE

STR. NO	STATION	CASTING/INLET	T/C @ FLOWLINE	PIPE TYPE	PIPE LENGTH (FT)	PIPE SIZE (IN)	INVERT (N)	INVERT (S)	INVERT (E)	INVERT (W)	COMMENTS
100	12+50.00	EJIW 7505 M3-T1 / TYPE J	811.90	D.I.P. CI 350	157	12	–		808.50	808.50	CONNECT TO STRUCTURE 103
101	12+00.00	EJIW 7505 M3-T1 / TYPE J	813.00	D.I.P. CI 350	47	12	–	810.50	810.50	810.50	CONNECT TO STRUCTURE 100
102	11+10.00	EJIW 7505 M3-T1 / TYPE J	817.50	D.I.P. CI 350	87	12	–	–	814.70	–	CONNECT TO STRUCTURE 101
103	14+13.00	EJIW 7505 M3-T1 / TYPE J	812.55	ADS N-12	5	12		806.93		806.93	CONNECT TO STRUCTURE 103A
103A	14+13.00	Storm Manhole	813.20	HDPE DR 11	301	12	806.70	–	806.40		CONNECT TO STRUCTURE 104A To Be Directional Bored
104	17+18.00	EJIW 7505 M3-T1 / TYPE J	805.65	ADS N-12	38	12	801.67	801.67	801.67		CONNECT TO STRUCTURE 105
104A	17+18.00	Storm Manhole	806.30	ADS N-12	5	12	801.97			801.97	CONNECT TO STRUCTURE 104
105		STORM MANHOLE	802.50	ADS N-12	146	12		798.75	794.75		CONNECT TO REINF. CONCRETE BOX CULVERT @ 788.50.
106		6' X 3' REINFORCED CONCRETE BOX CULVERT	–	–	83	–	789.20	788.52	–	–	PREFORM LAST SECTION WITH BEND TO MATCH EXISTING FLOW LINE. PROVIDE ACCESS TO BOX CULVERT W/ MANHOLE CASTINGS AT EACH END.
107	12+00.00	EJIW 6610 / TYPE E	812.40		10	12	810.75				CONNECT TO STRUCTURE 101
108		EJIW 6610 / TYPE E	792.00	ADS N-12	10	12	–	790.00(SW)	790.18	–	CONNECT TO EXIST. 12" CMP (E) CONNECT TO STRUCTURE 106 DOWNSTREAM ELEVATION=789.50
109		EJIW 7565 M3-T1 / TYPE B	791.90	ADS N-12	8	12	–	789.40(SW)	–	–	CONNECT TO STRUCTURE 106 DOWNSTREAM ELEVATION=789.20
200		SANITARY DROP MANHOLE	793.86	DIP W/ PROTECTO 401 CERAMIC EPOXY COATING	56	8	–	–	787.63	789.87 787.63	CONNECT TO EXISTING MANHOLE ELEVATION=787.37

NOTE:
ADJUSTMENT OF WATER AND SANITARY SEWER SERVICES MAY BE REQUIRED FOR STORM SEWER INSTALLATION. A MINIMUM 18" VERTICAL SEPARATION SHALL BE MAINTAINED BETWEEN ALL SERVICE LATERALS AND THE PROPOSED STORM SEWER LINE. CHANGE ORDERS WILL NOT BE ISSUED FOR RELOCATION OF EXISTING SERVICE LINES. THE CONTRACTOR SHALL INCLUDE THIS WORK IN THEIR BID PRICE.

NOTE:
ALL YARD AND ROOF DRAIN LINES ENCOUNTERED IN THE TEMPORARY OR PERMANENT RIGHT-OF-WAY SHALL BE CONNECTED TO THE NEAREST DOWNSTREAM STORM STRUCTURE. THIS MAY ALSO BE NECESSARY IN AREAS WHERE THE NEW SIDEWALK GRADE IS HIGHER THAN THE EXISTING PARCEL AND EXTENSIVE PONDING ON THE PROPERTY MAY BECOME PROBLEMATIC. THESE SITUATIONS WILL BE DETERMINED ON A CASE BY CASE BASIS DURING CONSTRUCTION.

SANITARY SEWER NOTE:
THE CONNECTION TO THE EXISTING SANITARY MANHOLE WILL HAVE TO BE RE-CORED AND A NEW BOOT INSTALLED TO RECEIVE THE DUCTILE IRON PIPE FROM STR. NO. 200. THE CONTRACTOR WILL BE REQUIRED TO HAVE THE EXISTING MANHOLE RE-COATED WITH SPECTRA SHIELD POLYMERIC / POLYURETHANE LINER AT THIS CONNECTION POINT.

Note: All storm sewer and sanitary sewer pipe and structures on this project to be installed by others.

20 0 20 40
Scale 1" = 20 ft

BENCHMARKS

2 WATER VALVE
N=4971.1822
E=5105.5526
ELEVATION=802.8570

NOTE: CONTRACTOR SHALL VERIFY ALL UTILITY LOCATIONS & DEPTHS AND NOTIFY ENGINEER OF ANY INACCURACIES IN LOCATION OR ELEVATION OR ANY CONFLICTS PRIOR TO & AFTER ANY EXCAVATION. NO PAYMENT SHALL BE MADE TO CONTRACTOR FOR UTILITY DESTRUCTION OR UNDERGROUND CHANGES REQUIRED DUE TO CONFLICTING ELEVATIONS.

revisions:

ARCHITECTURE
CIVIL ENGINEERING
PLANNING
BYNUM FANYO & ASSOCIATES, INC.
528 north walnut street
bloomington, indiana
(812) 339-2990 (Fax)
(812) 332-8030

JEFFREY S. FANYO No. 18283 STATE OF INDIANA PROFESSIONAL ENGINEER
1-5-
certified by:

Proposed:
MARILYN DRIVE IMPROVEMENTS
From Nancy Street to High Street
Bloomington Indiana

title: UTILITY AND EROSION CONTROL PLAN

designed by: RC
drawn by: JR
sheet no: 7 OF 15
project no.: 400748

PRACTICE 3.13
DORMANT AND FROST SEEDING

PURPOSES
* To provide early germination and soil stabilization in the spring.
* To reduce sediment runoff to downstream areas.
* To improve the visual aesthetics of the construction area.
* To repair previous seedings.

REQUIREMENTS
Site and seedbed preparation: Graded as needed, and lime and fertilizer applied.
Plant species: Selected on the basis of soil type, adaptability to the region, and planned use of the area (see Exhibits 3.13–B and 3.13–C).

APPLICATION (Exhibit 3.13–B and C)

SITE PREPARATION:
1. Grade the area to be seeded.
2. Install needed erosion/water runoff control practices, such as temporary or permanent diversions, sediment basins, silt fences, or straw bale dams (Practices 3.21, 3.22, 3.72, 3.74 or 3.75).

FOR DORMANT SEEDING
Site and seedbed preparation and mulching can be done months ahead of actual seeding or if the existing ground cover is adequate, seeding can be directly into it.
Seeding dates: Dec. 1–Feb. 28 (north of US 40), Dec. 10–Jan. 15 (south of US 40).
1. Broadcast Fertilizer as recommended by a soil test; or if testing was not done consider applying 400–600 lbs./ acre of 12–12–12 analysis or equivalent, fertilizer.
2. Apply mulch upon completion of grading (Practice 3.15).
3. Select an appropriate seed species or mixture from Exhibit 3.13–B or Exhibit 3.13–C, and broadcast on top of the mulch and/or into existing ground cover at rate shown.

FOR FROST SEEDING
Seed is broadcast over the prepared seedbed and incorporated into the soil by natural freeze–thaw action.
Seeding dates: Feb. 28–Mar. 28 (north of US 40), Feb. 15–Mar. 15 (south of US 40).
1. Broadcast Fertilizer as recommended by a soil test; or if testing was not done consider applying 400–600 lbs./ acre of 12–12–12 analysis or equivalent, fertilizer.
2. Apply mulch upon completion of grading (Practice 3.15).
3. Select an appropriate seed species or mixture from Exhibit 3.13–B or Exhibit 3.13–C, and broadcast on top of the mulch and/or into existing ground cover at rate shown. Do not work the seed into the soil.

Exhibit 3.13–B. Temporary Dormant or Frost Seeding Recommendations.

Seed species*	Rate per acre
Wheat or rye	150lbs.
Spring oats	150 lbs.
Annual ryegrass	60 lbs.

* Perennial species may be used as a temporary cover, especially if the area to be seeded will remain idle for more than a year (Practice 3.12).

Exhibit 3.13–C. Permanent Dormant of Frost Seeding Recommendations.
This table provides several seeding options. Additional seed species and mixtures are available commercially. When selecting a mixture, consider site conditions, including soil properties, slope aspect and the tolerance of each species to shade and droughtiness.

Seed species*	Rate per acre	Optimum soil pH
OPEN AND DISTRIBUTED AREAS (REMAINING IDLE MORE THAN 1 YR).		
1. Perennial ryegrass	50 to 75 lbs.	5.6 to 7.0
+ white or ladino clover*	1 1/2 to 3 lbs.	
2. Kentucky bluegrass	30 lbs.	5.5 to 7.5
+ smooth bromegrass	15 lbs.	
+ switchgrass	5 lbs.	
+ timothy	6 lbs.	
+ perennial ryegrass	15 lbs.	
+ white or ladino clover*	1 1/2 to 3 lbs.	
3. Perennial ryegrass	22 to 45 lbs.	5.6 to 7.0
+ prairie switchgrass	22 to 45 lbs.	
4. Prarie switch grass	50 to 75 lbs.	5.5 to 7.5
+ white or ladino clover*	1 1/2 to 3 lbs.	
STEEP BANKS AND CUTS, LOW MAINTENANCE AREAS (NOT MOWED).		
1. Smooth bromegrass	35 to 50 lbs.	5.5 to 7.5
+ red clover*	15 to 30 lbs.	
2. Prarie switch grass	50 to 75 lbs.	5.5 to 7.5
+ white or ladino clover*	1 1/2 to 3 lbs.	
3. Prarie switch grass	50 to 75 lbs.	5.5 to 7.5
+ red clover*	15 to 30 lbs.	
(Recommended north of US 40.)		
4. Orchardgrass	30 to 45 lbs.	5.6 to 7.0
+ red clover*	15 to 30 lbs.	
+ ladino clover*	1 1/2 to 3 lbs.	
5. Crownvetch*	15 to 18 lbs.	5.6 to 7.0
+ prairie switchgrass	30 to 45 lbs.	
(Recommended north of US 40.)		
LAWNS AND HIGH MAINTENANCE AREAS		
1. Bluegrass	160 to 210 lbs.	5.5 to 7.5
2. Perennial ryegrass (turf–type)	70 to 90 lbs.	5.6 to 7.0
+ bluegrass	105 to 135 lbs.	
3. Prarie switch grass (turf–type)	195 to 250 lbs.	5.6 to 7.5
+ bluegrass	30 to 45 lbs.	
CHANNELS AND AREAS OF CONCENTRATED FLOW		
1. Parennial ryegrass	150 to 225 lbs.	5.6 to 7.0
+ white or ladino clover*	1 1/2 to 3 lbs.	
2. Kentucky bluegrass	30 lbs.	5.5 to 7.5
+ smooth bromegrass	15 lbs.	
+ switchgrass	5 lbs.	
+ timothy	6 lbs.	
+ perennial ryegrass	15 lbs.	
+ white or ladino clover*	1 1/2 to 3 lbs.	
3. Prarie switch grass	150 to 225 lbs.	5.5 to 7.5
+ white or ladino clover*	1 1/2 to 3 lbs.	
4. Prarie switch grass	150 to 225 lbs.	5.5 to 7.5
+ perennial bluegrass	22 to 30 lbs.	
+ kentucky bluegrass	22 to 30 lbs.	

* For best results: (a) legume seed should be inoculated; (b) seeding mixtures containing legumes should preferably be spring–seeded, although the grass may be fall–seeded and the legume frost–seeded; (c) if legumes are fall–seeded, do so in early fall.

NOTE: If using mixtures other than those listed here, increase the seeing rate by 50% over the conventional rate.

MAINTENANCE
* Apply 200–300 lbs./acre of 12–12–12 or equivalent fertilizer between Apr. 15 and May 10 or during periods of vigorous growth.
* Re–seed and mulch any areas that have inadequate cover by mid to late Apr. For best results, re–seed within the recommended dates shown in Practices 3.11 for temporary seeding or 3.12 for permanent seeding.

(GP) PRACTICE 3.61–B
GRAVEL CURB INLET PROTECTION

REQUIREMENTS (Exhibit 3.61–B)
Contributing drainage area: 1 acre maximum.
Capacity: Runoff from a 2–yr. frequency, 24–hr. duration storm event entering the storm drain without bypass flow.
Location: At curb inlets where ponding is not likely to cause inconvenience or damage.
Gravel: 1–2 in. diameter (INDOT CA No. 2)
Wire mesh: Chicken wire or hardware cloth with 1/2–in. openings.
Geotextile fabric (optional): For Filtration.

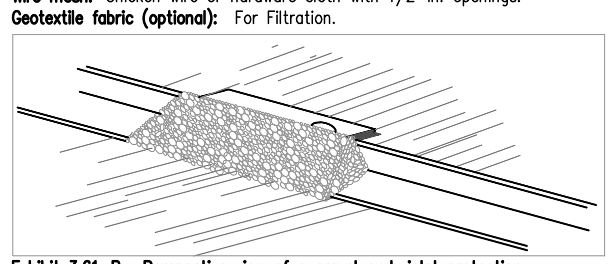

Exhibit 3.61–B. Perspective view of a gravel curb inlet protection.

INSTALLATION (Exhibit 3.61–B)
1. Install gravel curb inlet protections as soon as the streets are paved in a new development situation or before land–disturbing activities in stabilized areas.
2. Place wire mesh over the curb inlet opening and/or grate so it extends at at least 12 in. beyond both top and bottom of the opening/grate.
3. Install geotextile fabric over the wire mesh for additional filtration (optional).
4. Pile gravel over the wire mesh to anchor it against the curb, covering the inlet opening completely.

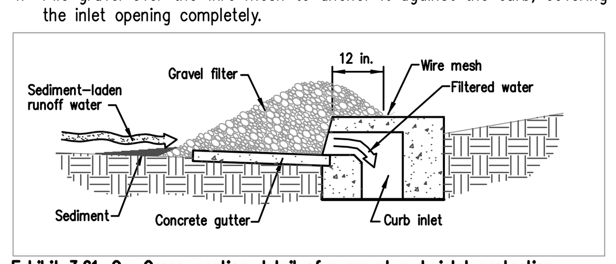

Exhibit 3.61–C. Cross–section detail of a gravel curb inlet protection.

MAINTENANCE
* After each storm event, remove sediment and replace the gravel; replace the geotextile filter fabric if used.
* Periodically remove sediment and tracked–on soil from the street (but not by flushing with water) to reduce the sediment load on the curb inlet practice.
* Inspect periodically, and repair damage caused by vehicles.
* When the contributing drainage area has been stabilized, remove the gravel, wire mesh, geotextile fabric, and any sediment, and dispose of them properly.

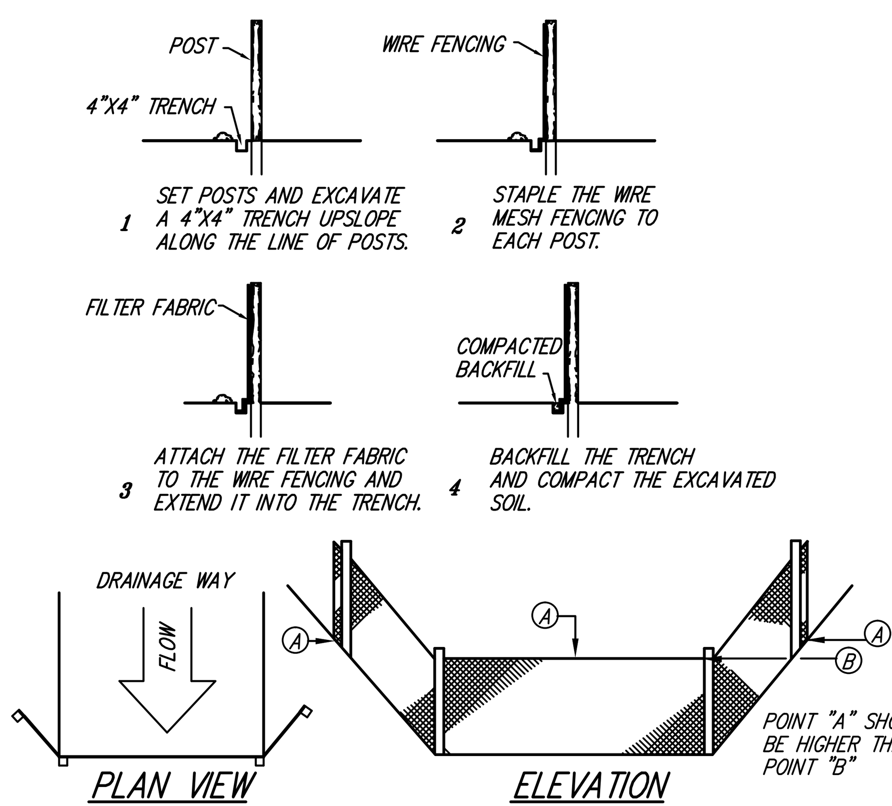

(SF) SILTATION BARRIER DETAILS
NOT TO SCALE

Note: All storm sewer and sanitary sewer pipe and structures on this project to be installed by others.

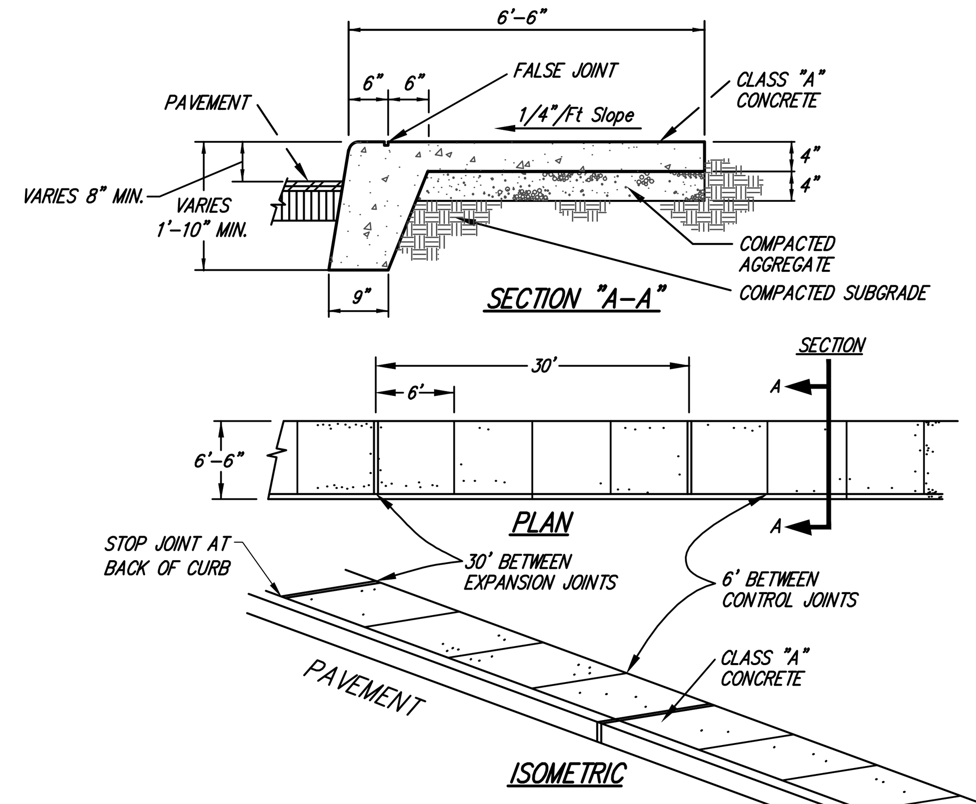

(F1) MONOLITHIC CONCRETE CURB AND SIDEWALK
NOT TO SCALE

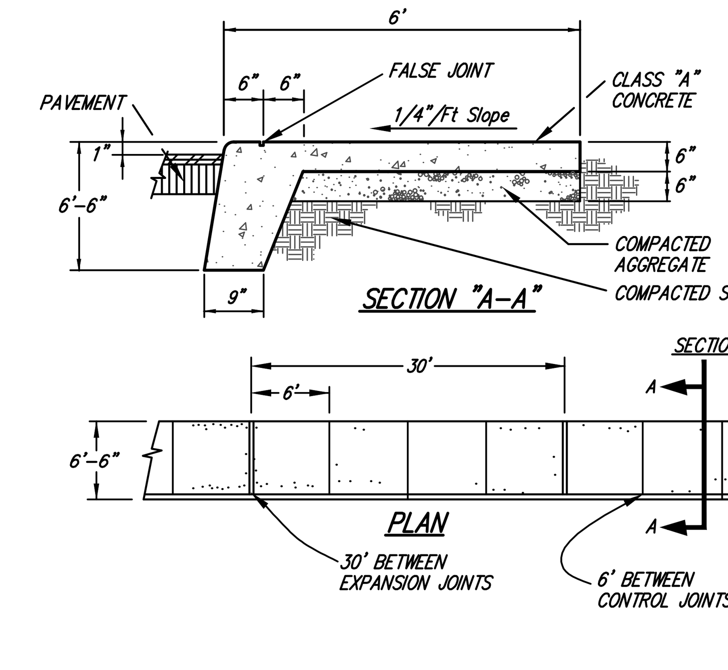

(F2) MONOLITHIC CONCRETE CURB AND SIDEWALK AT DRIVE LOCATIONS
NOT TO SCALE

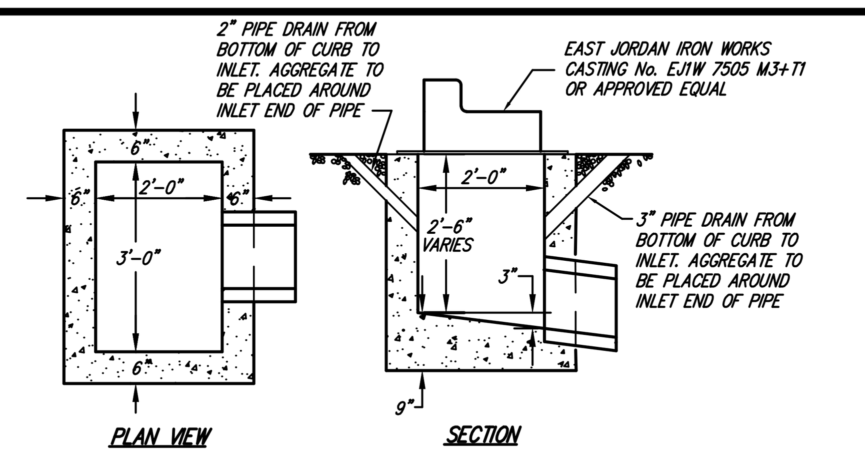

STORM INLET, TYPE "J"
NOT TO SCALE

NOTES:
1. FOR INLET INVERT ELEVATIONS SEE STRUCTURE NOTE OR STRUCTURE DATA TABLE.
2. USE OF BRICK, BLOCKS, OR CONCRETE IS PERMISSIBLE.
3. CONTRACTOR MAY BE PERMITTED TO PRECAST INLETS SUBJECT TO THE APPROVAL OF THE ENGINEER AND IN ACCORDANCE WITH THE STANDARD SPECIFICATIONS.

NOTE: MATERIALS AND CONSTRUCTION SHALL BE IN ACCORDANCE WITH INDOT STANDARD SPECS., CURRENT EDITION.

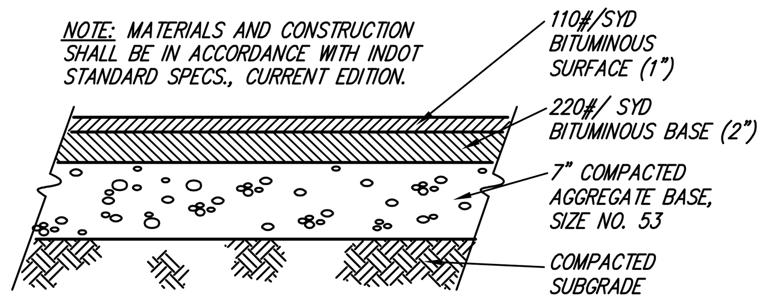

(A) BITUMINOUS PAVING DETAIL
NOT TO SCALE

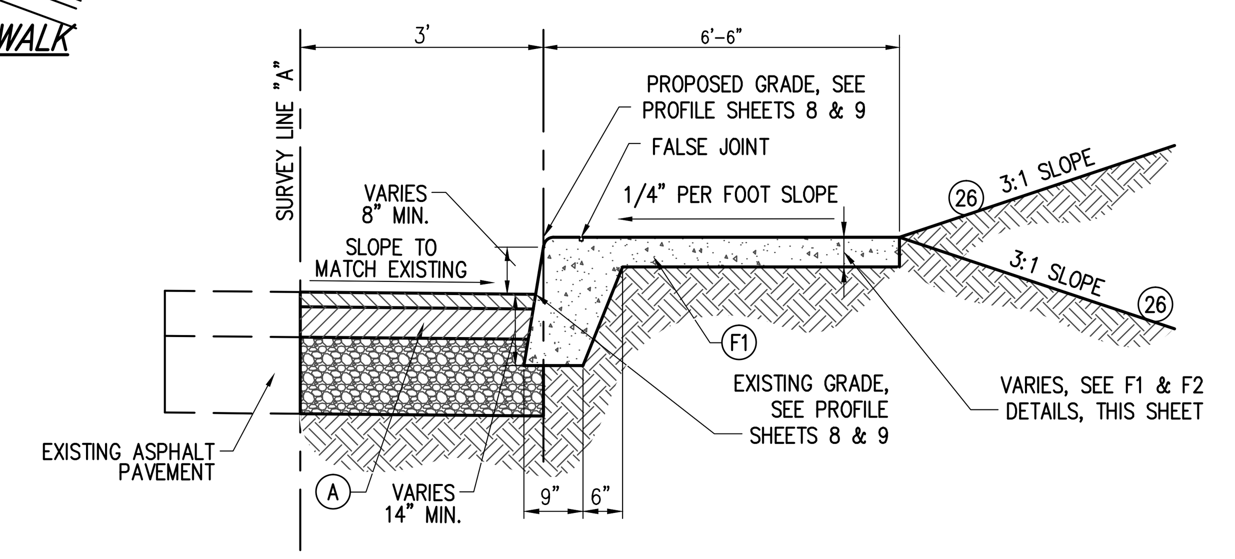

TYPICAL CROSS SECTION
NOT TO SCALE

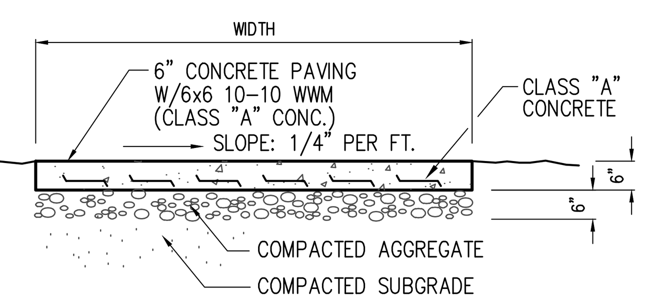

(C) 6" CONCRETE PAVEMENT
NOT TO SCALE

NOTE: MATERIALS AND CONSTRUCTION SHALL BE IN ACCORDANCE WITH INDOT STANDARD SPECS., CURRENT EDITION.

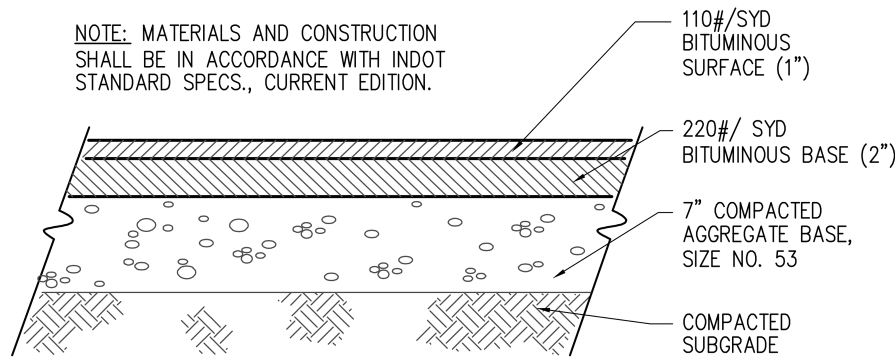

(J) BITUMINOUS MIXTURE FOR APPROACHES
NOT TO SCALE

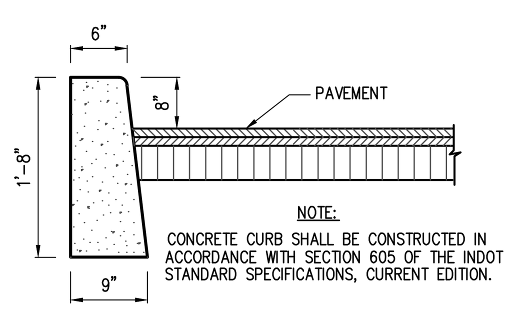

NOTE:
CONCRETE CURB SHALL BE CONSTRUCTED IN ACCORDANCE WITH SECTION 605 OF THE INDOT STANDARD SPECIFICATIONS, CURRENT EDITION.

(13) CONCRETE CURB
NOT TO SCALE

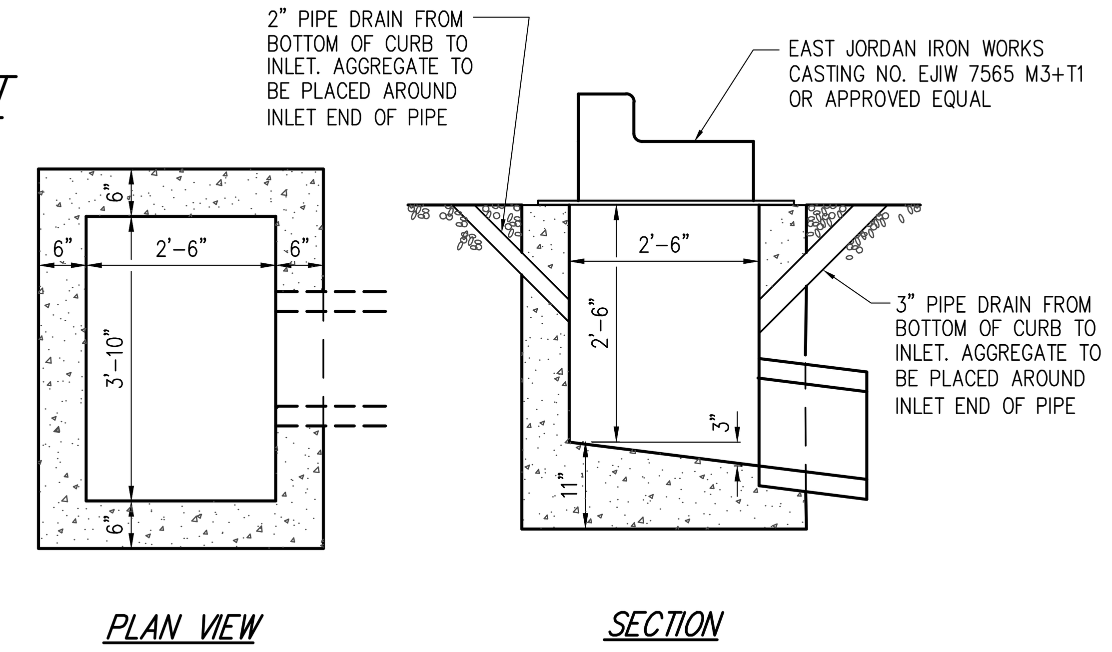

STORM INLET, TYPE "B"
NOT TO SCALE

NOTES:
1. FOR INLET INVERT ELEVATIONS SEE STRUCTURE NOTE OR STRUCTURE DATA TABLE.
2. USE OF BRICK, BLOCKS, OR CONCRETE IS PERMISSIBLE.
3. CONTRACTOR MAY BE PERMITTED TO PRECAST INLETS SUBJECT TO THE APPROVAL OF THE ENGINEER AND IN ACCORDANCE WITH THE STANDARD SPECIFICATIONS.

GENERAL NOTES:
1. THESE DIMENSIONS ARE BASED ON A 6 IN. CURB HEIGHT. THEY SHALL BE PROPORTIONALLY ADJUSTED FOR OTHER CURB HEIGHTS.
2. WHERE SITE INFEASIBILITY PRECLUDES CONSTRUCTION TO THE WIDTH SHOWN, SUCH WIDTH MAY BE DECREASED TO A MINIMUM OF 3'–0".
3. THE BOTTOM EDGE OF THE CURB RAMP SHALL BE FLUSH WITH THE EDGE OF ADJACENT PAVEMENT AND GUTTER LINE.
4. LANDING AREAS AT THE TOP OF THE CURB RAMPS SHALL HAVE MAXIMUM CROSS SLOPE OF 50:1 IN ANY DIRECTION WHEN SITE INFEASIBILITY PRECLUDES A LANDING SLOPE OF 50:1 IN ANY DIRECTION, THE SLOPE PERPENDICULAR THE CURB FACE SHALL NOT EXCEED 50:1.
5. IF THE SITE FEASIBILITY PRECLUDES CONSTRUCTION TO THE WIDTH SHOWN, THE LANDING WIDTH MAY BE DECREASED TO 3'–0" MINIMUM. THE RUNNING SLOPE OF THE CURB RAMP MAY BE STEEPENED TO A MAXIMUM OF 10:1 FOR A MAXIMUM 6 IN. RISE.
6. DRAINAGE INLETS SHOULD BE LOCATED UPHILL FROM CURB RAMPS TO PREVENT PUDDLES AT THE PATH OF TRAVEL.
7. SEE STANDARD DRAWING E604–SWCR–12 FOR IMPROVED ACCESS ON NARROW SIDEWALKS.
8. ALGEBRAIC DIFFERENCE IN GRADE BETWEEN THE BASE OF CURB RAMP AND THE GUTTER SHALL BE LIMITED TO LESS THAN 11%. IF IT IS NOT PRACTICAL, A 2'–0" WIDE LEVEL STRIP SHALL BE PROVIDED. SEE DETAIL.
9. MINIMUM RECOMMENDED WIDTH OF RAMP IS 4'–0".

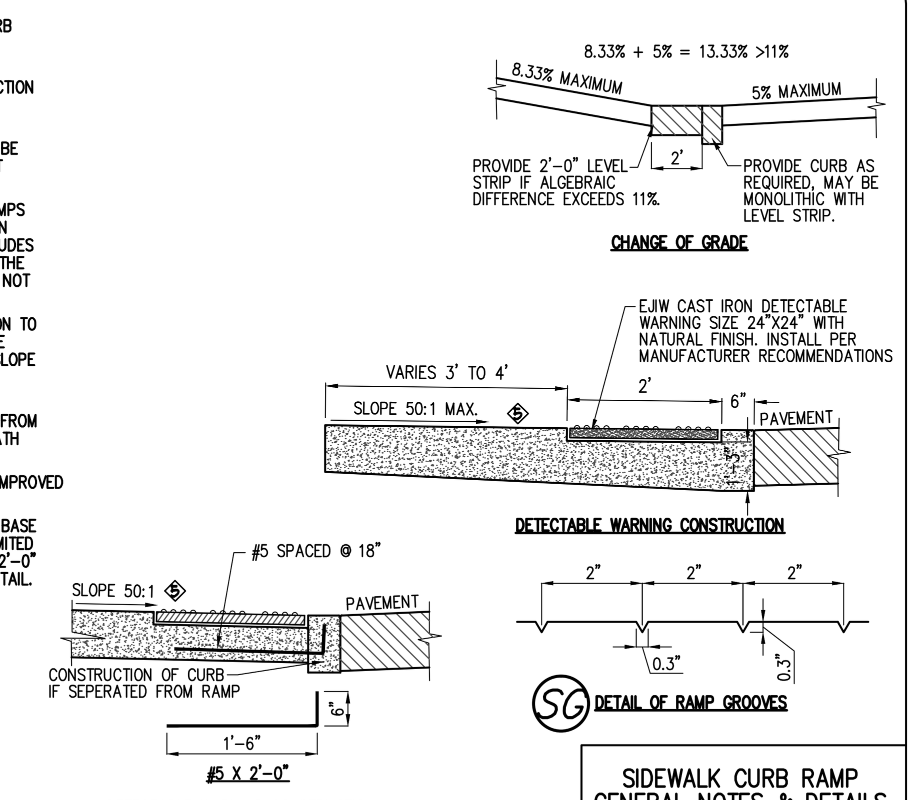

SIDEWALK CURB RAMP
GENERAL NOTES & DETAILS

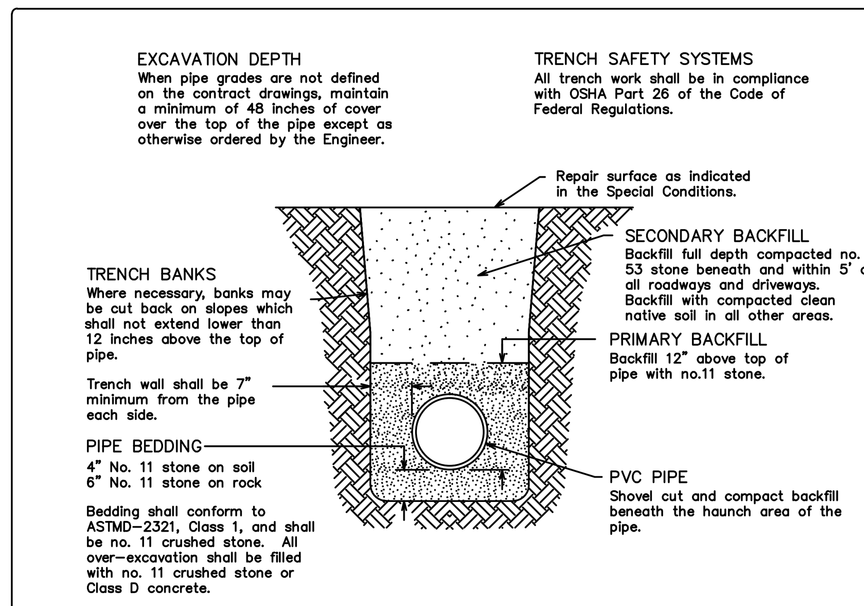

TYPICAL TRENCH SECTION

City of Bloomington Utilities Engineering Department	BEDDING AND BACKFILL DETAIL FOR PVC PIPE LESS THAN 18 DIA.	STANDARD DETAIL NUMBER 11
NO SCALE 10\5\98 M. Hicks — Drawing File: P:\ENGINEER\DRAW\STD11.DGN; Drawing File: P:\ENGINEER\DRAW\STD11.HGL; Word File: P:\RULES\STD11.DOC		

FIRE HYDRANT
Fire hydrants shall conform to ANSI/AWWA C502 and must be Kennedy Guardian model K81A or Mueller Super Centurion 200 (catalog no. A–423). These are dry–barrel type fire hydrants with a 5 1/4 " main valve opening, two hose nozzles and one pumper nozzle. Hydrants shall have a mechanical joint type connection and shall have a primer coat of silver enamel.

Install fire hydrant at a minimum of 2' from structures or obstructions and set the hydrant bury line 2" above finished grade. The pumper nozzle must face the street.

NOTES
1. For connection to existing water mains, a 6" tapping valve and saddle shall be used in place of the gate valve and anchor coupling.

6" M.J. GATE VALVE (See Note 1)
Gate valves shall be cast iron body, fully bronze mounted, with a resilient seat and a non rising stem in accordance with AWWA C509.

VALVE BOX
Valve box shall be a cast iron, three–piece adjustable type. Cover shall be labeled "WATER".

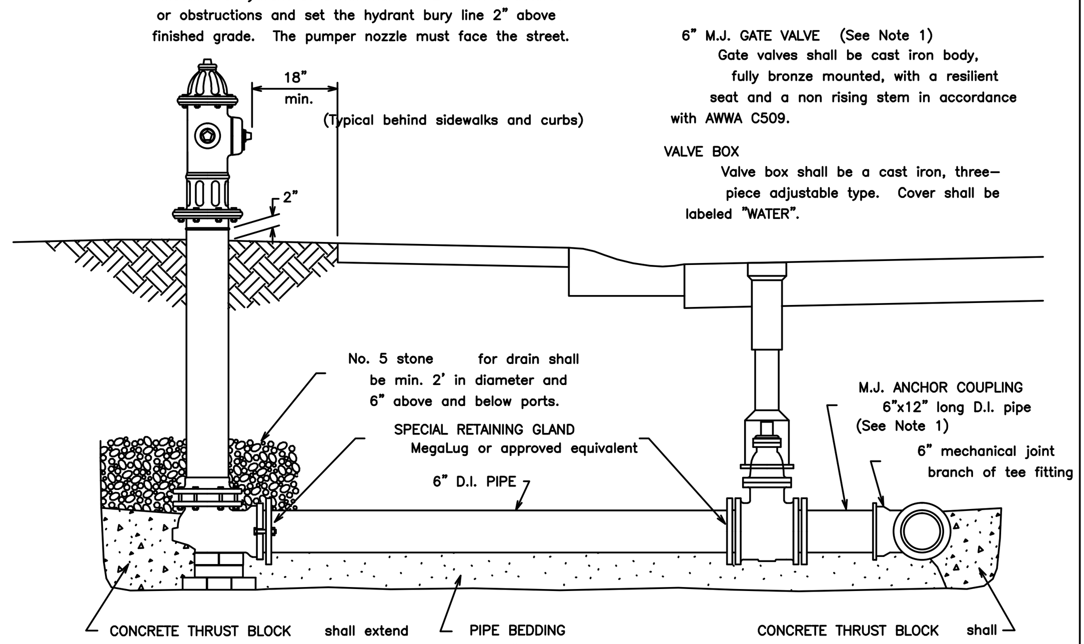

CONCRETE THRUST BLOCK shall extend horizontally to undisturbed soil. Taper thrust block form to hydrant elbow and form clear of drain valve openings.
Place the hydrant elbow on solid concrete brick or flat stone.

PIPE BEDDING
4" of no. 11 stone in soil or 6" of no. 11 stone in rock

BACKFILL
No. 11 stone from bedding to pipe springline. Compacted No. 53 stone beneath and within 5' of pavement or clean native soil in other areas.

CONCRETE THRUST BLOCK shall extend horizontally to undisturbed soil.

City of Bloomington Utilities Engineering Department	STANDARD FIRE HYDRANT AND CONNECTION DETAIL	STANDARD DETAIL NUMBER 8
NO SCALE 9/1/94 M. Hicks — Drawing File: P:\ENGINEER\DRAW\STD8.HGL; Word File: P:\RULES\STD8.DOC		

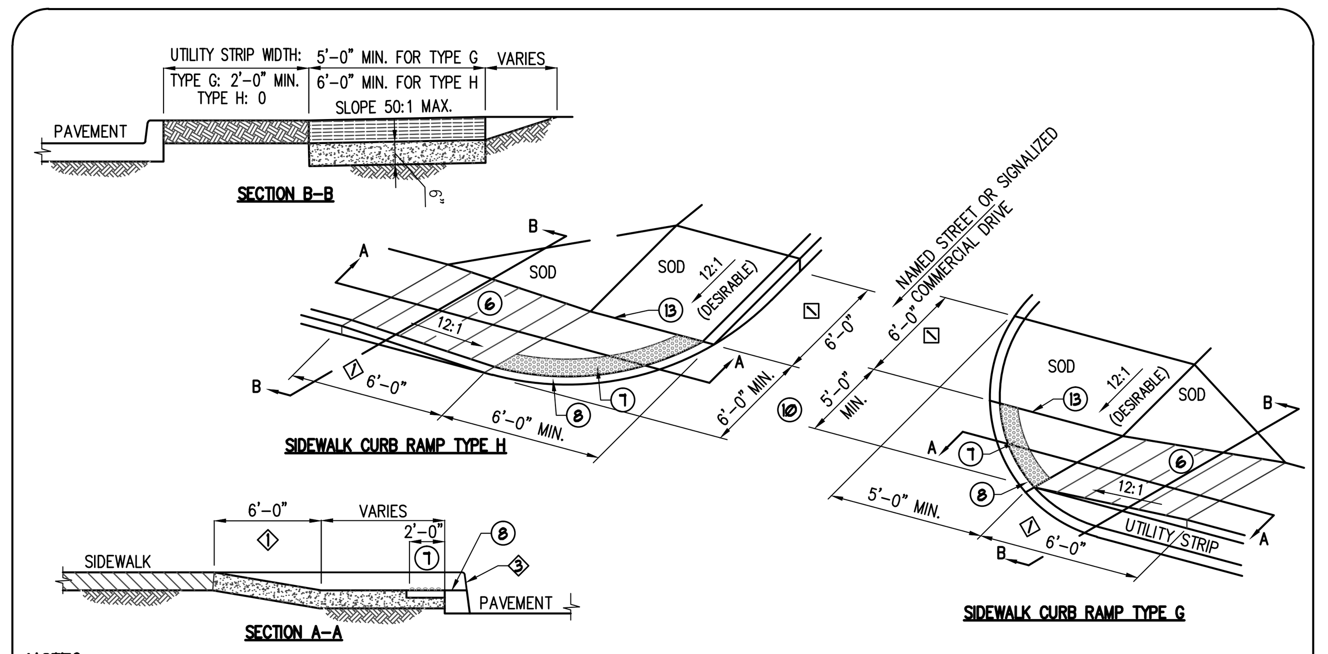

NOTES:
6. SEE STANDARD DRAWING E 604–SWCR–02 FOR GROOVE DETAILS.
7. SEE STANDARD DRAWING E 604–SWCR–02 FOR DETAILS OF THE DETECTABLE WARNING SURFACE
8. SEE STANDARD DRAWING E 604–SWCR–02 FOR ALTERNATE CURB CONSTRUCTION.
10. SIDEWALK ACROSS APPROACH SHALL BE SLOPED AT 50:1 MAXIMUM TRANSVERSELY.
11. SEE STANDARD DRAWING E 604–SWCR–02 FOR TYPICAL RAMP CONSTRUCTION DETAIL.
12. SEE STANDARD DRAWING E 604–SWCR–01 AND –02 FOR LOCATION PLAN AND GENERAL NOTES RESPECTIVELY.
13. VERTICAL FACE CURB OPTIONAL.

INDIANA DEPARTMENT OF TRANSPORTATION
SIDEWALK CURB RAMPS
TYPE G AND TYPE H
STANDARD DRAWING NO. E 604–SWCR–09

NOTES:
6. SEE STANDARD DRAWING E 604–SWCR–02 FOR GROOVE DETAILS
7. SEE GENERAL NOTES ABOVE FOR DETECTABLE WARNING WARNING CONSTRUCTION DETAILS.
8. SEE STANDARD DRAWING E 604–SWCR–02 FOR ALTERNATE CURB CONSTRUCTION.
9. SEE STANDARD DRAWING E 604–SWCR–02 FOR TYPICAL RAMP CONSTRUCTION DETAIL.
10. CURB OR WALL SHALL BE USED WHEN NECESSARY BASED ON FIELD CONDITIONS.
11. SEE STANDARD DRAWINGS E 604–SWCR–01 AND –02 FOR LOCATION PLAN AND GENERAL NOTES RESPECTIVELY

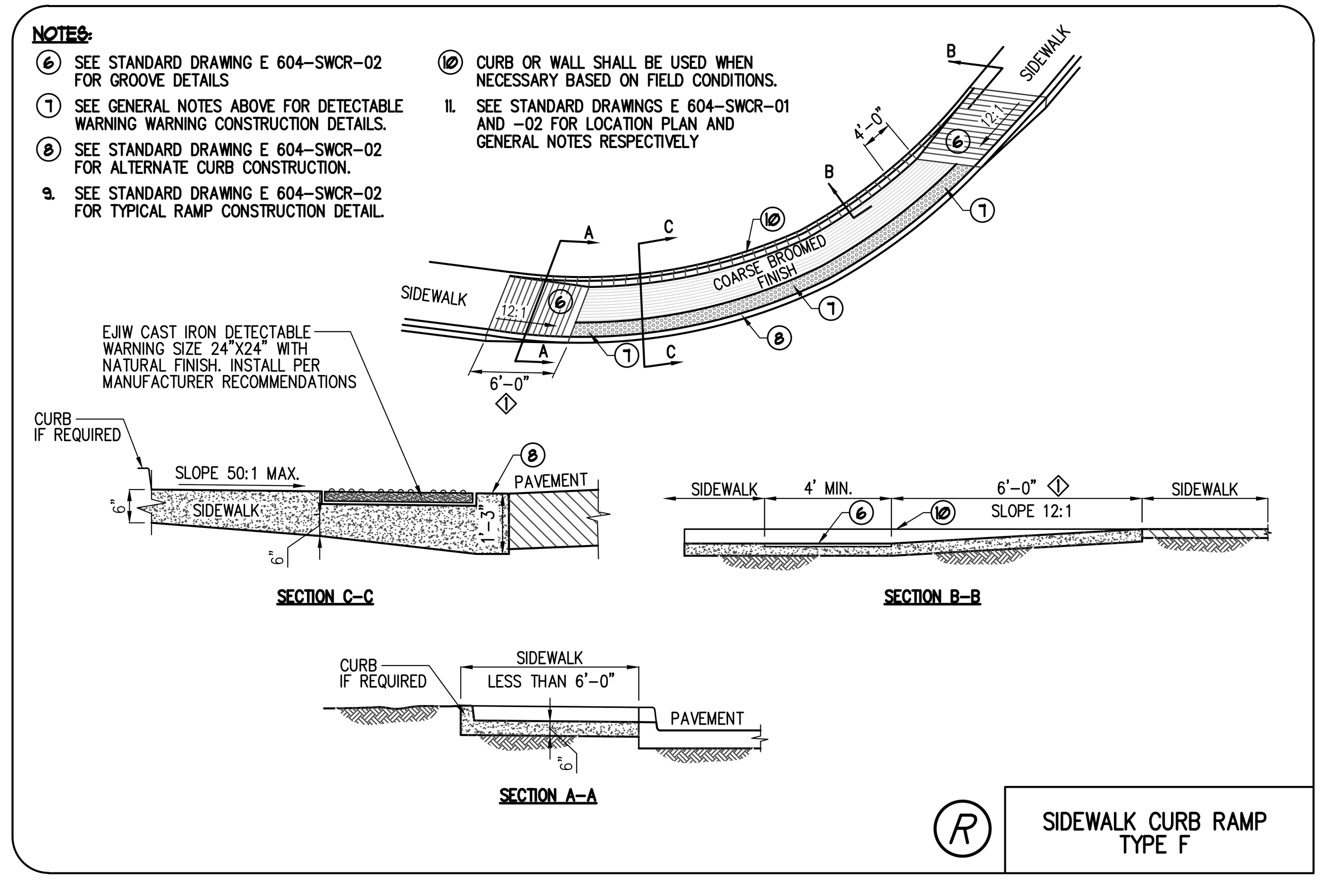

(R) SIDEWALK CURB RAMP TYPE F

revisions:

ARCHITECTURE
CIVIL ENGINEERING
PLANNING
bloomington, indiana
(812) 339–2990 (Fax)

BYNUM FANYO & ASSOCIATES, INC.
528 north walnut street
(812) 332–8030

JEFFREY S. FANYO
No. 18283
STATE OF
PROFESSIONAL ENGINEER
1–5–10
certified by:

Proposed:
MARILYN DRIVE IMPROVEMENTS
From Nancy Street to High Street
Bloomington Indiana

title: MISCELLANEOUS DETAILS

designed by: RC
drawn by: JR
sheet no: 8 OF 15
project no.: 400748

REVISIONS

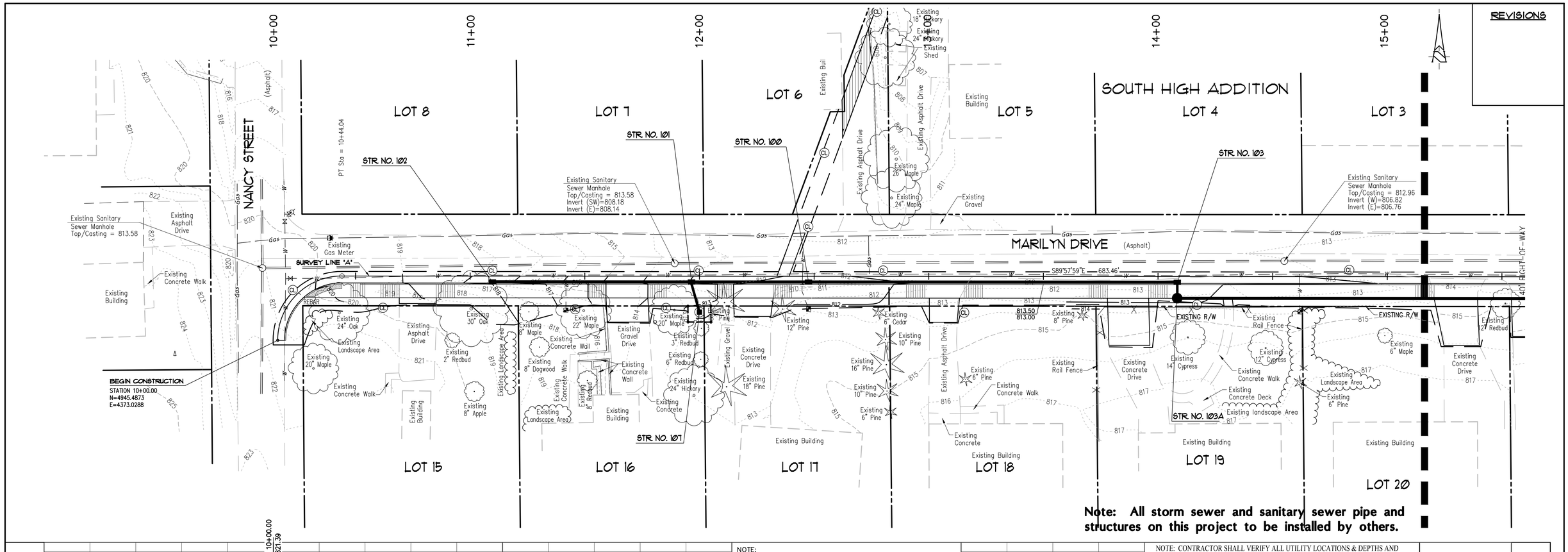

NOTE:
THE PROFILE CENTERLINE RUNS ALONG THE PROPOSED FACE OF CURB WHICH IS OFFSET THREE FEET (3') FROM SURVEY LINE A.

NOTE: CONTRACTOR SHALL VERIFY ALL UTILITY LOCATIONS & DEPTHS AND NOTIFY ENGINEER OF ANY INACCURACIES IN LOCATION OR ELEVATION OR ANY CONFLICTS PRIOR TO & AFTER ANY EXCAVATION. NO PAYMENT SHALL BE MADE TO CONTRACTOR FOR UTILITY DESTRUCTION OR UNDERGROUND CHANGES REQUIRED DUE TO CONFLICTING ELEVATIONS.

SCALES:
1" = 20' HOR
1" = 5' VER

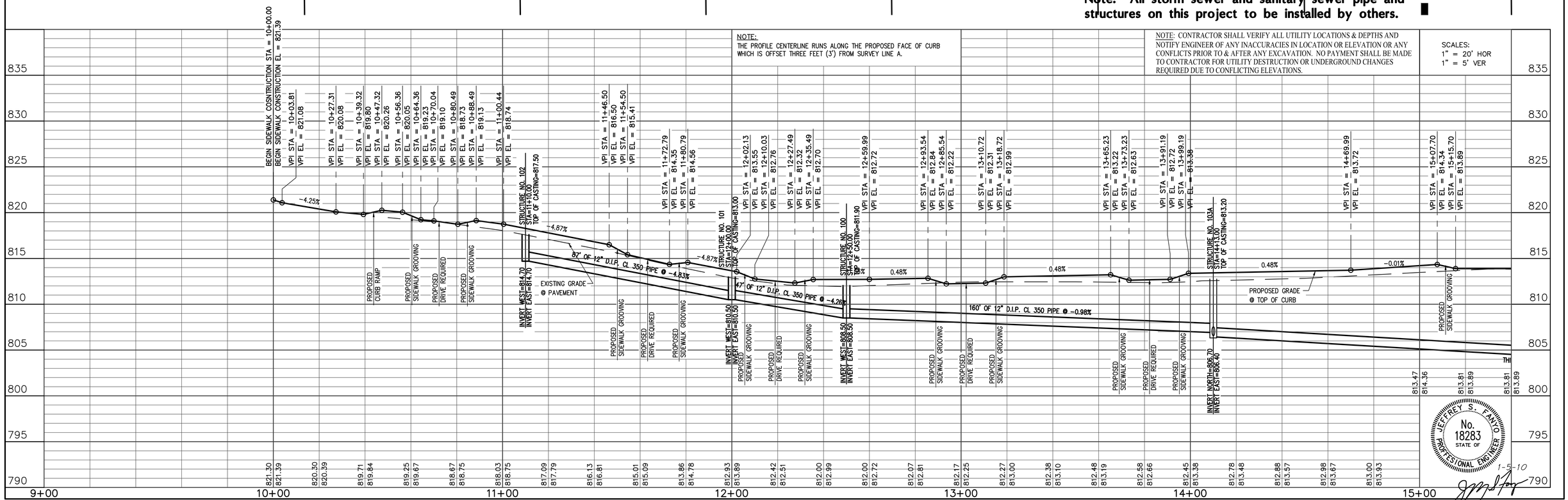

JEFFREY S. FANYO No. 18283 STATE OF PROFESSIONAL ENGINEER
1-5-10

PREPARED BY BYNUM FANYO & ASSOCIATES INC. 528 N. WALNUT ST. BLOOMINGTON, IN. 47404 (812) 332-8030

PROJECT NAME	PROJECT NO.	SHEET	TOTAL SHEETS	REFERENCE
MARILYN DRIVE SIDEWALK CONSTRUCTION	400748	9	15	

REVISIONS

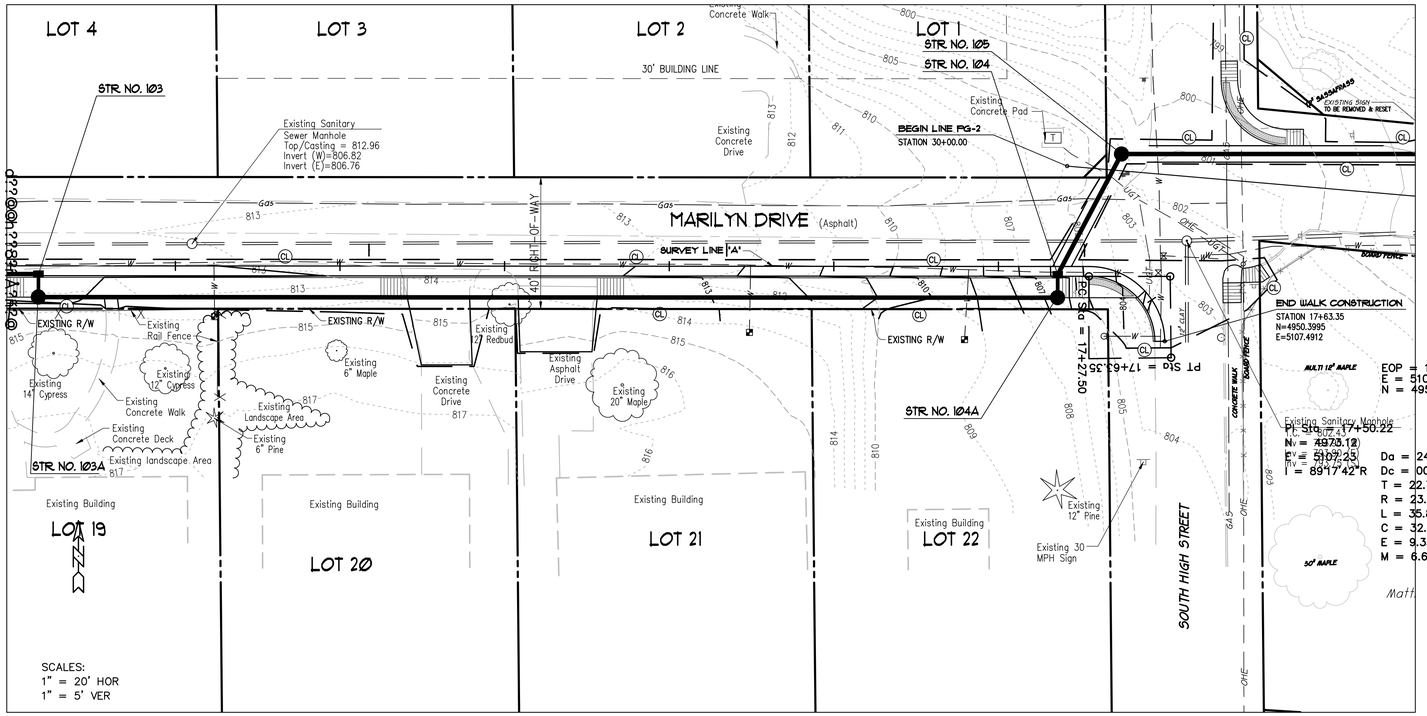

Note: All storm sewer and sanitary sewer pipe and structures on this project to be installed by others.

NOTE:
THE PROFILE CENTERLINE RUNS ALONG THE PROPOSED FACE OF CURB WHICH IS OFFSET THREE FEET (3') FROM SURVEY LINE A.

NOTE: CONTRACTOR SHALL VERIFY ALL UTILITY LOCATIONS & DEPTHS AND NOTIFY ENGINEER OF ANY INACCURACIES IN LOCATION OR ELEVATION OR ANY CONFLICTS PRIOR TO & AFTER ANY EXCAVATION. NO PAYMENT SHALL BE MADE TO CONTRACTOR FOR UTILITY DESTRUCTION OR UNDERGROUND CHANGES REQUIRED DUE TO CONFLICTING ELEVATIONS.

SCALES:
1" = 20' HOR
1" = 5' VER

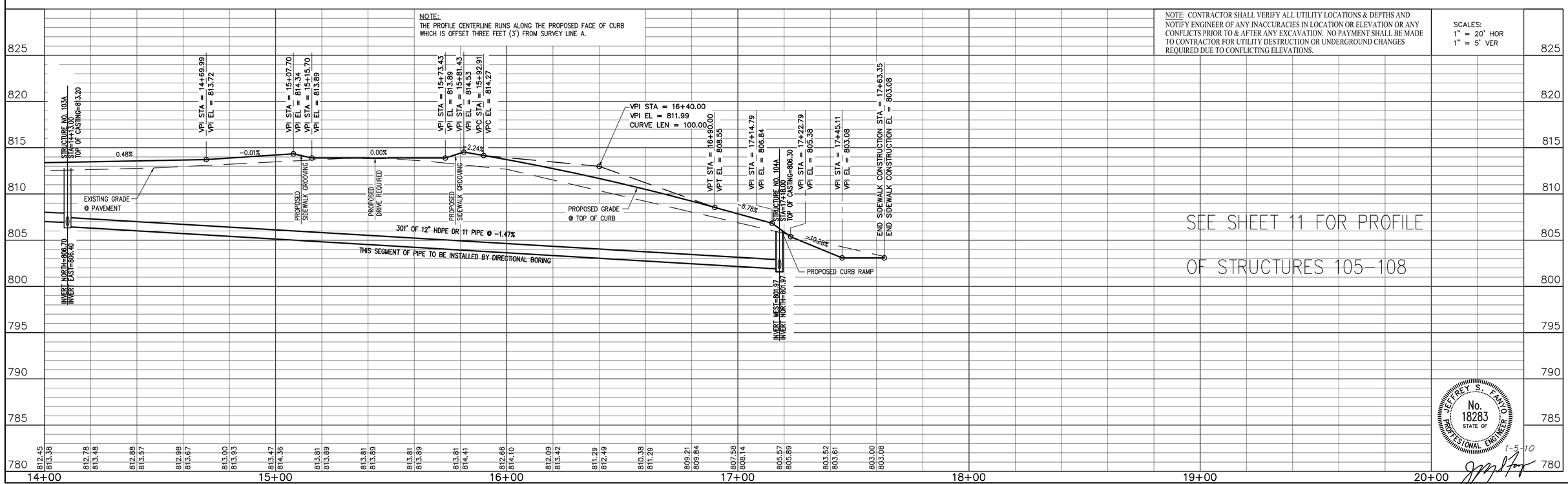

SEE SHEET 11 FOR PROFILE OF STRUCTURES 105–108

JEFFREY S. FANYO No. 18283 STATE OF PROFESSIONAL ENGINEER

1-5-10

PREPARED BY BYNUM FANYO & ASSOCIATES INC. 528 N. WALNUT ST. BLOOMINGTON, IN. 47404 (812) 332-8030

PROJECT NAME	PROJECT NO.	SHEET	TOTAL SHEETS	REFERENCE
MARILYN DRIVE SIDEWALK CONSTRUCTION	400748	10	15	

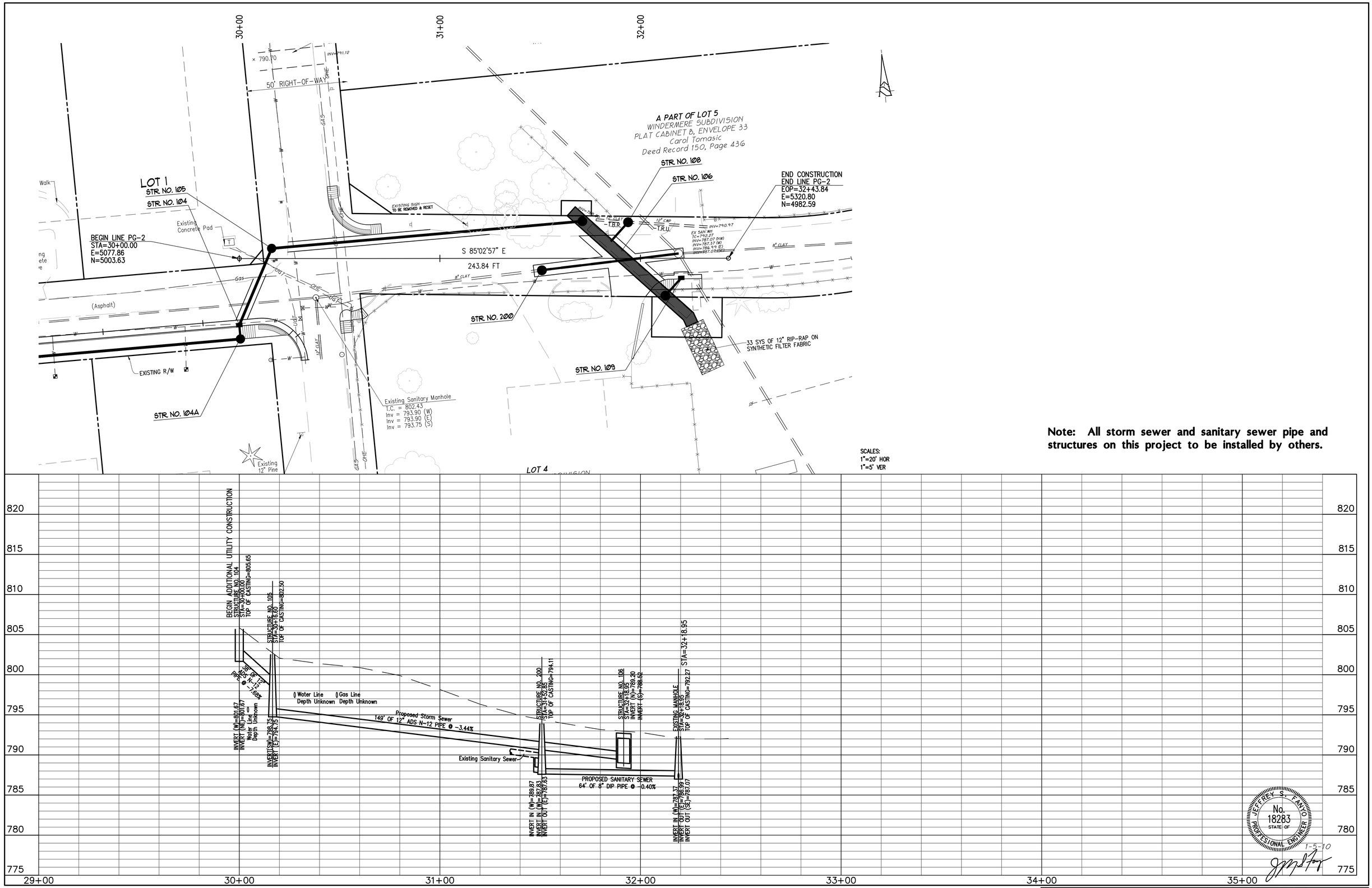

PREPARED BY BYNUM FANYO & ASSOCIATES INC. 528 N. WALNUT ST. BLOOMINGTON, IN. 47404 (812) 332-8030

PROJECT NAME	PROJECT NO.	SHEET	TOTAL SHEETS	REFERENCE
MARILYN DRIVE SIDEWALK CONSTRUCTION	400748	11	15	LINE PG-2

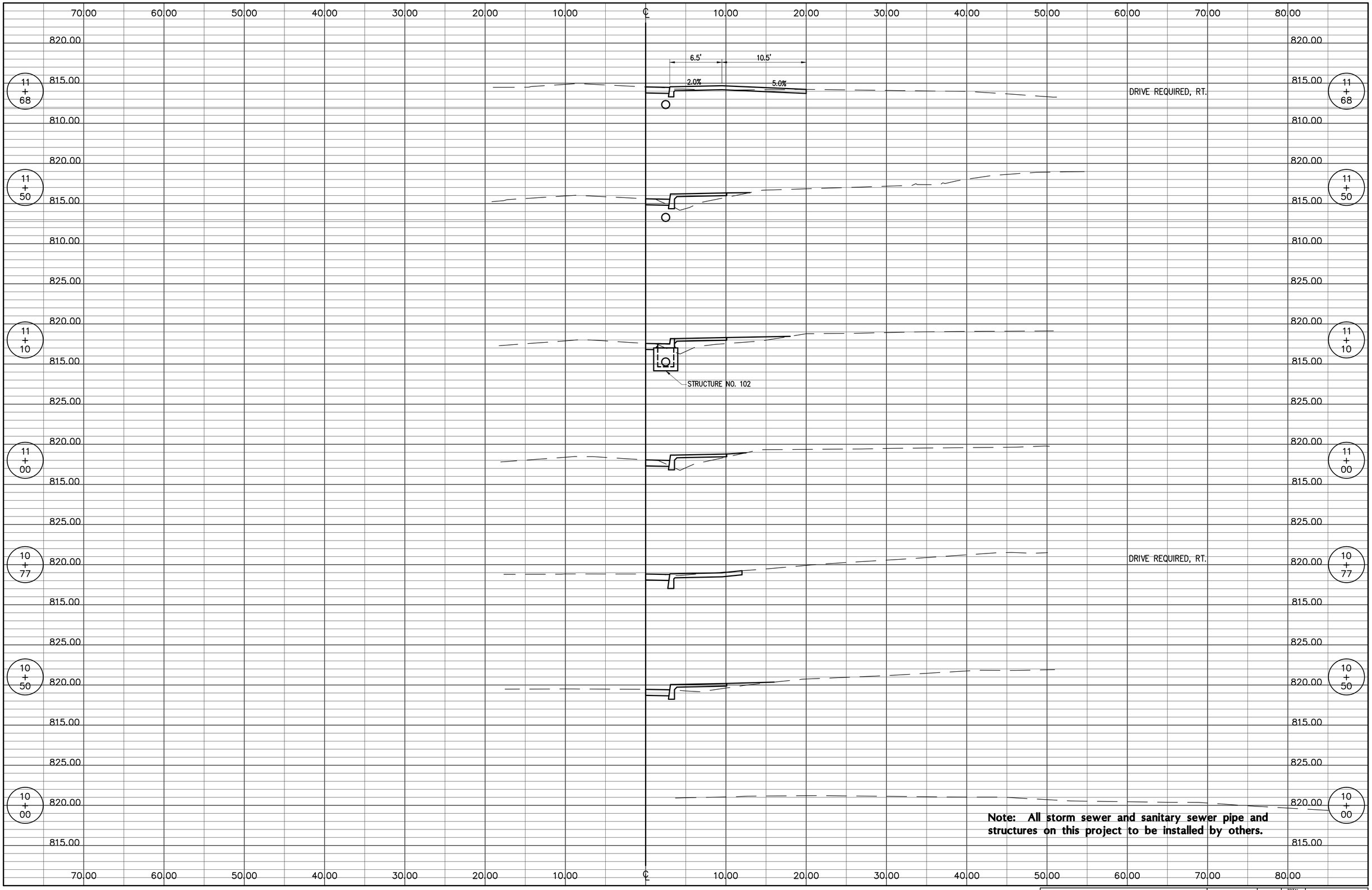

PREPARED BY BYNUM FANYO & ASSOCIATES INC. 528 N. WALNUT ST. BLOOMINGTON, IN. 47404 (812) 332-8030

PROJECT NAME	PROJECT NO.	SHEET	TOTAL SHEETS	REFERENCE
MARILYN DRIVE SIDEWALK CONSTRUCTION	400748	12	15	

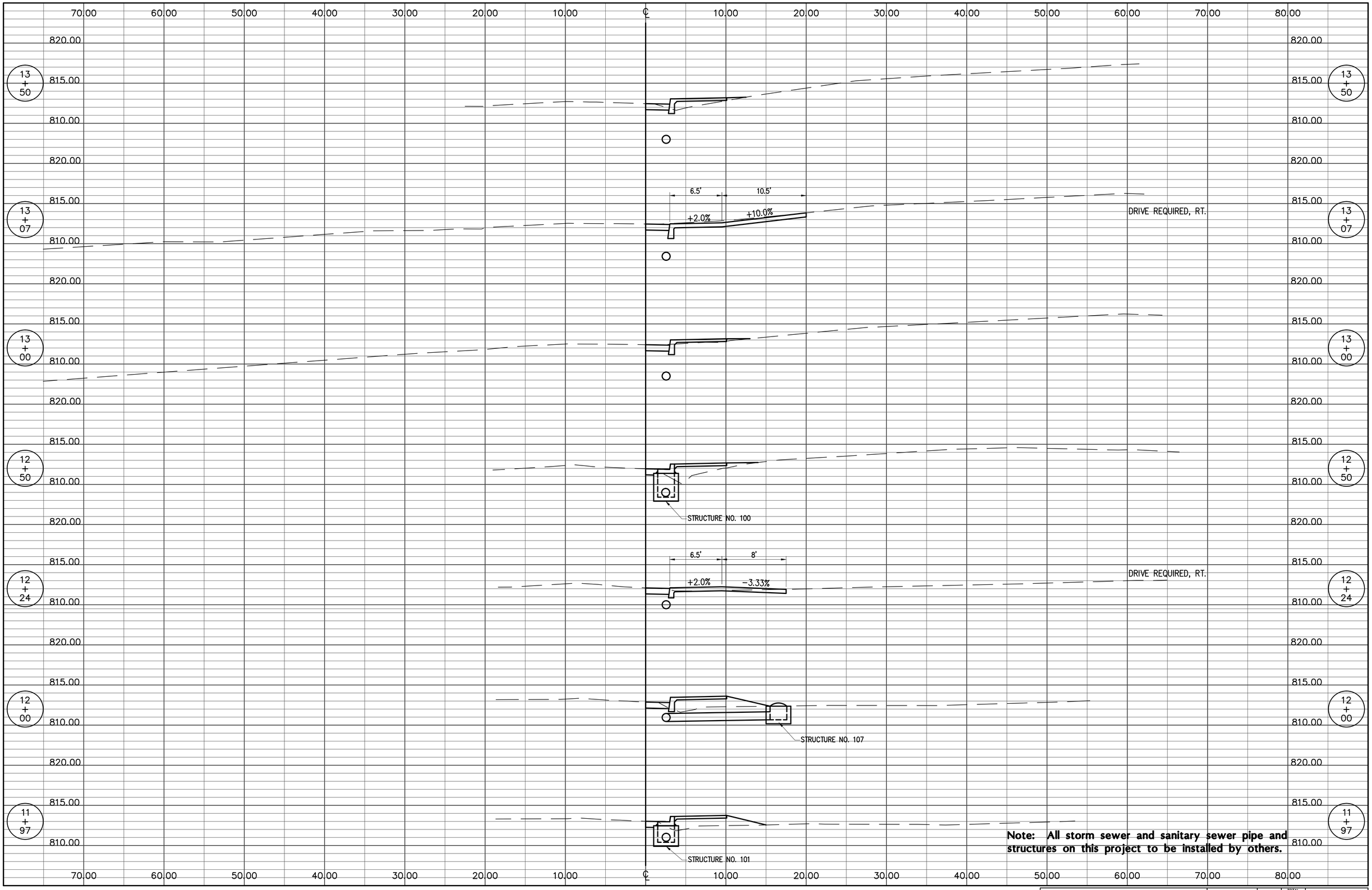

PREPARED BY BYNUM FANYO & ASSOCIATES INC. 528 N. WALNUT ST. BLOOMINGTON, IN. 47404 (812) 332-8030

PROJECT NAME	PROJECT NO.	SHEET	TOTAL SHEETS	REFERENCE
MARILYN DRIVE SIDEWALK CONSTRUCTION	400748	13	15	

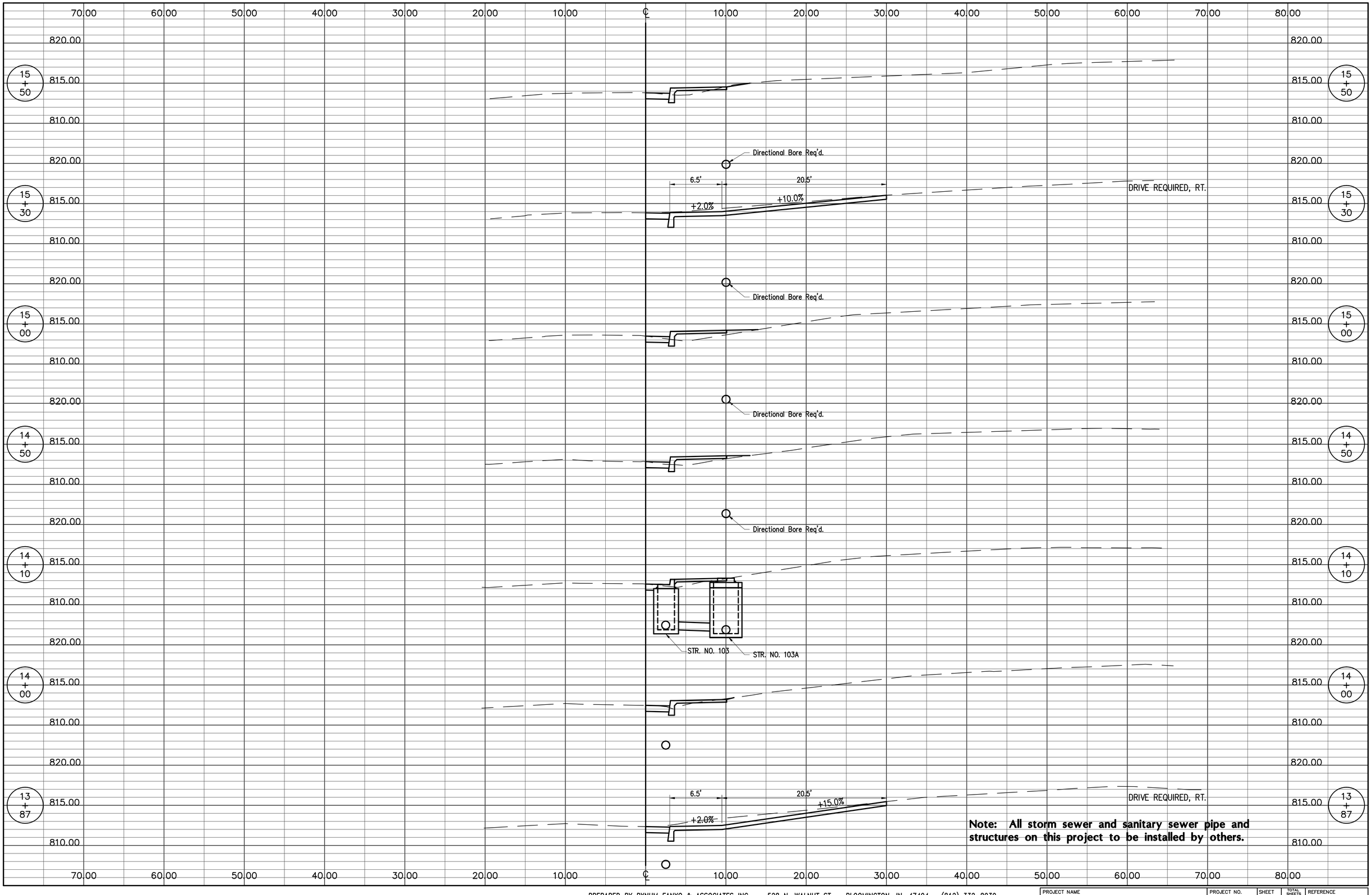

Note: All storm sewer and sanitary sewer pipe and structures on this project to be installed by others.

PREPARED BY BYNUM FANYO & ASSOCIATES INC. 528 N. WALNUT ST. BLOOMINGTON, IN. 47404 (812) 332-8030

PROJECT NAME	PROJECT NO.	SHEET	TOTAL SHEETS	REFERENCE
MARILYN DRIVE SIDEWALK CONSTRUCTION	400748	14	15	

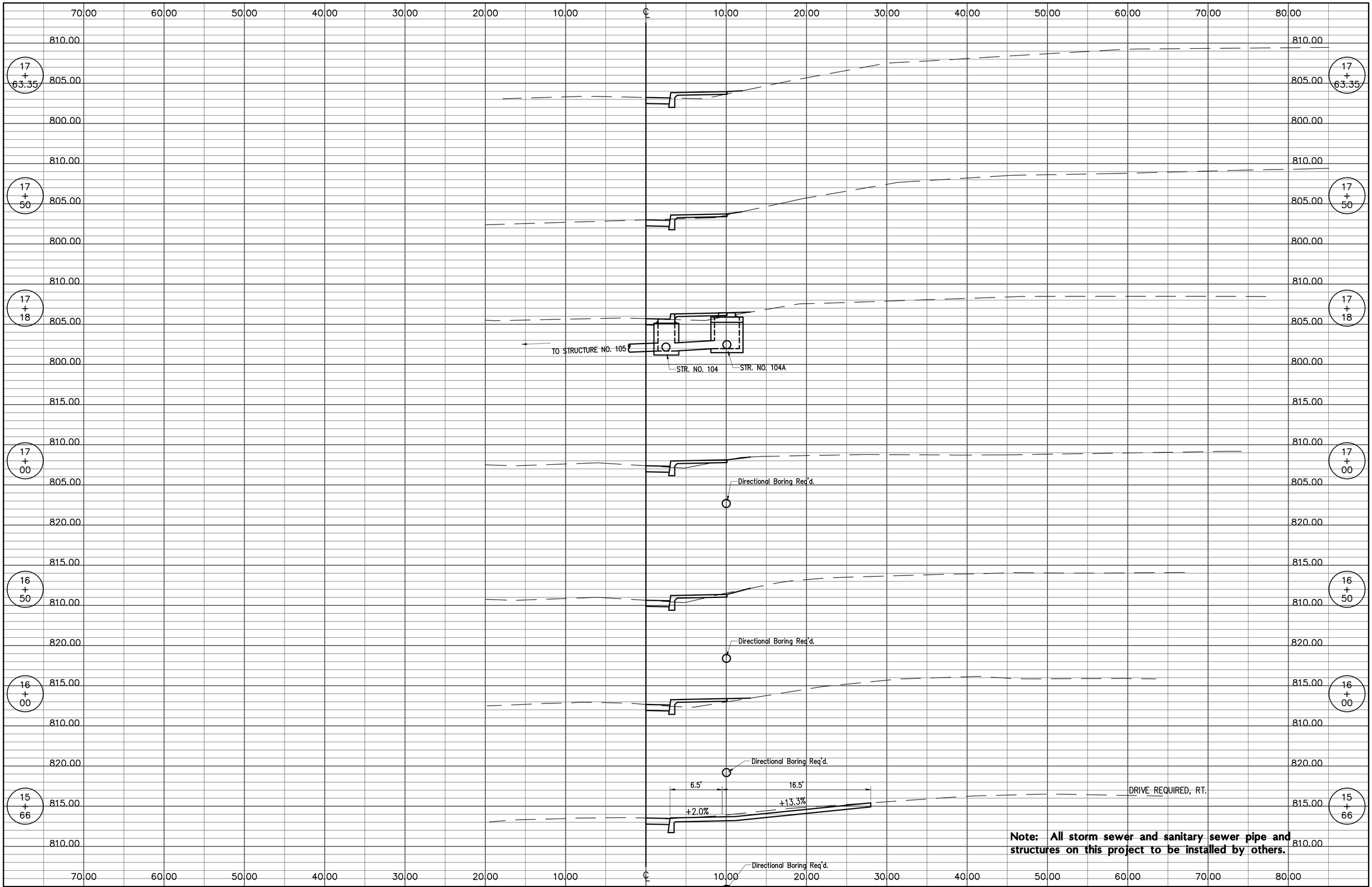

Note: All storm sewer and sanitary sewer pipe and structures on this project to be installed by others.

PREPARED BY BYNUM FANYO & ASSOCIATES INC. 528 N. WALNUT ST. BLOOMINGTON, IN. 47404 (812) 332-8030

PROJECT NAME	PROJECT NO.	SHEET	TOTAL SHEETS	REFERENCE
MARILYN DRIVE SIDEWALK CONSTRUCTION	400748	15	15	