Board of Public Works Meeting

July 30, 2024

The City will offer virtual options, including CATS public access television (live and tape-delayed) and

Public comments and questions will be encouraged via Zoom or bloomington.in.gov rather than in person

The City is committed to providing equal access to information. However, despite our efforts, at times, portions of our board and commission packets are not accessible for some individuals. If you encounter difficulties accessing material in this packet, please contact April Rosenberger at april.rosenberger@bloomington.in.gov and provide your name, contact information, and a link to or description of the document or web page you are having problems with.

AGENDA
BOARD OF PUBLIC WORKS
July 30, 2024

A Regular Meeting of the Board of Public Work will be held **Tuesday, July 30, 2024 at 5:30 p.m**. in the Council Chambers (RM# 115) of City Hall at the Showers Building, 401 N. Morton Street, Bloomington, Indiana and via Zoom by using the following link
https://bloomington.zoom.us/j/84986911147?pwd=aIau3MfRAbdI9vuualGC4nP9bZrgxb.1
Meeting ID: 849 8691 1147 Passcode: 132223

I. BID OPENING
1. **Downtown Street Maintenance Project**

II. MESSAGES FROM BOARD MEMBERS

III. PETITIONS AND REMONSTRANCES

IV. CONSENT AGENDA
1. **Resolution 2024-042; Written Approval of Payments Pre-Approved by Controller for Special Purchase**
2. **Resolution 2024-043; Approval of Special Purchase under Emergency Conditions for Storm Clean-Up**
3. **Street Sweeping Memorandum of Understanding between City of Bloomington Utilities and Public Works**
4. **Change Order #1 for Moores Pike Trail SE Park Improvements**
5. **Sidewalk and Lane Closure Request from Service Solutions of Bloomington on N. College Ave.**
6. **Contract E&B Paving for W 3rd St from Franklin Rd to Patterson Dr. Project**
7. **Approval of Minutes; July 02, 2024**
8. **Approval of Minutes; July 16, 2024.**
9. **Lane, Bike Lane, and Sidewalk Closure Request from Duke Energy on W. 11th Street**
10. **Alley Closure and Metered Parking Reservation Request from Fox Property & Development**
11. **Sidewalk Closure Request from Dishman Construction Adjacent to 1115 N. College Ave.**
12. **Sidewalk Closure Extension Request from Reed & Sons on E. 9th Street**
13. **Approval of Payroll**

V. NEW BUSINESS
1. **Sidewalk and Alley Closure and Metered Parking Lane Reservation Request from F.A. Wilhelm adjacent to 400 E. 7th Street**
2. **Sidewalk, Parking Lane & Alley Closure Request from Gilliatte General Contractors on S. Washington Street**
3. **Lane & Road Closure Request from Reed & Sons adjacent to Miller Showers Park**
4. **Lane & Sidewalk Closure Extension Request from AEG**
5. **Lane & Sidewalk Closure Request from AEG**
6. **Contract with Browning Chapman, LLC for the Walnut Street Garage Repairs Project**

VI. STAFF REPORTS & OTHER BUSINESS

VII. APPROVAL OF CLAIMS

VIII. ADJOURNMENT

The City is committed to providing equal access to information. However, despite our efforts, at times, portions of our board and commission packets are not accessible for some individuals. If you encounter difficulties accessing material in this packet, please contact April Rosenberger, Public Works Departmental Accessibility contact at april.rosenberger@bloomington.in.gov or 812.349.3411 and provide your name, contact information, and a link to or description of the document or web page you are having problems with.

The City offers virtual options, including CATS public access television (live and tape- delayed). Comments and questions will be encouraged via Zoom or bloomington.in.gov rather than in person.

Auxiliary aids for people with disabilities are available upon request with adequate notice. Please call 812.349.3411 or email public.works@bloomington.in.gov

Board of Public Works

Staff Report

Project/Event:	Resolution 24-42
Petitioner/Representative:	City of Bloomington
Staff Representative:	Aleksandrina Pratt
Date:	July 30, 2024

Report:

Under Indiana law, the Board must issue prior written approval of payments pre-approved by the controller for a special purchase under emergency conditions. Resolution 24-42 gives the necessary prior written approval.

CITY OF BLOOMINGTON
BOARD OF PUBLIC WORKS
RESOLUTION 2024-42

A WRITTEN APPROVAL OF PAYMENTS PRE-APPROVED BY THE CONTROLLER AND APPROVAL OF SPECIAL PURCHASE UNDER EMERGENCY CONDITIONS

WHEREAS, in accordance with Indiana Code § 36-9-6-2, the Board of Public Works ("Board") shall supervise the streets, alleys, public grounds, and other property of the City of Bloomington ("City"), and shall keep them in repair and good condition. The Board shall also provide for the cleaning of the City streets and alleys; and,

WHEREAS, in accordance with Indiana Code § 36-9-6-8, the Board may, by contract or otherwise, clean and sprinkle any public place within the City; and,

WHEREAS, in accordance with Indiana Code § 5-22-10-4, the Board may make a special purchase when there exists, under emergency conditions, a threat to public health, welfare, or safety; and,

WHEREAS, in accordance with Indiana Code § 5-22-10-1, the Board may make a special purchase under emergency conditions without soliciting bids or proposals;

WHEREAS, in accordance with Indiana Code § 5-22-10-3, the Board shall maintain the contract records for a special purchase in a separate file and shall include in the contract file a written determination of the basis for the special purchase and the selection of a particular contractor. The record must also contain each contractor's name, the amount and type of the contract, and a description of the supplies purchased under each contract; and,

WHEREAS, in accordance with Indiana Code § 36-4-8-14 and Bloomington Municipal Code 2.26.085, the controller is authorized to pay expenses that must be paid because of emergency circumstances prior to Board approval provided that: the Board has issued prior written approval of these pre-approved payments and the Board reviews and allows the claim at its next regular meeting following the pre-approved payment of expense; and

WHEREAS, on June 25, 2024, a thunderstorm with wind gusts of up to 78 mph swept through the City, uprooting and breaking tress, and causing major power outages; and

WHEREAS, the City partnered with Williams Tree Company of Martinsville to collect trees and vegetation debris from the storm in an effort to clear the right-of-way and help residents that have been affected by the storm.

NOW, THEREFORE, BE IT HEREBY RESOLVED BY THE BOARD OF PUBLIC WORKS THAT:

1. A written approval of payments pre-approved by the controller in connection with claims under the jurisdiction of the Board is issued.

2. The thunderstorm that swept through the City on June 25, 2024, created an emergency condition that justifies a special purchase.

3. The payment that was pre-approved by the controller in the not-to-exceed amount of $150,000 (Exhibit A, Emergency Purchase Justification Form) for this special purchase is approved.

4. A separate file for the records of this special purchase is created.

ADOPTED THIS 30th DAY OF JULY, 2024
BOARD OF PUBLIC WORKS

_____
Kyla Cox Deckard, President

_____
Elizabeth Karon, Vice President

_____
James Roach, Secretary

Print Reset Form

City of Bloomington Emergency Purchase Justification Form

Vendor: Williams Tree Company LLC Amount: DNE $150,000

Emergency Purchase is a purchase which has been determined by the Department Head, and approved by the Controller, to be an emergency, and would cause immediate danger to health, safety or welfare, or other substantial loss to the City if not procured. This is a Special Purchasing Method as established by Indiana State Code 5-22-10, and does not require formal quotes, bids, or proposals.

PURCHASE INFORMATION

1. State the reason for the emergency purchase by explaining what the emergency is and what caused the emergency situation:

   Due to storms that took place on Tuesday, June 25, 2024 the City of Bloomington experienced heavy vegetation damage throughout the City that exceeds our current capacity. The County issued an Emergency Declaration the following day due to the extent of the damage caused by the storm.

2. State the facts that lead to the conclusion that financial or operational damage or risk of damage will occur if needs are not satisfied immediately (do not simply say that there will be damage or risk of damage):

   The urban forester estimates that approximately 2% of the City's trees were damaged or downed, representing approximately 2,000 - 3,000 trees that are currently hindering passage of the right- of- way. This scope of work exceeds the capacity of the Street Division and requires assistance from the selected vendor. Their assistance will ensure that Public Works is able to get roads, sidewalks, and pathways accessible and passible for the residents of Bloomington as we recover from this event.

3. State why the needs were not or could not be anticipated so that goods or services could not have been purchased following standard procedures:

   Due to the unforeseen damage created by this storm we are unable to remove the materials due to the extensive amount on the ground. In addition this has been declared an emergency situation requiring additional appropriations to expedite a return to normal operations that could not have been mitigated or planned for in advance.

4. State the name of the Vendor and the reason and process used for selecting this vendor (Attach all quotes or proposals received from other sources, if applicable:

   Public Works staff reached out to four commercial vegetation removal contractors with Williams Tree Service LLC being the only responsive vendor. Their proposal and letters of recommendation have been attached to the original submission request.

I certify that the above statements are true and correct, and that no other material fact or consideration offered or given has influenced this recommendation for an emergency procurement.

Michael Large	Special Projects/Operations	Public Works
Print/Type Name	Print/Type Title	Department
Department Head Signature	June 28, 2004	812-360-7268
	Date	Telephone Number

Amount: $150,000.00 Budget Line: 101-02-20000-53170

Approved by:_____ Date:_____

Jessica McClellan - Controller

4/2017

Board of Public Works

Staff Report

Project/Event:	Resolution 24-43
Petitioner/Representative:	City of Bloomington
Staff Representative:	Aleksandrina Pratt
Date:	July 30, 2024

Report:

The controller pre-approved a special purchase in connection with clearing trees and vegetation debris caused by the storm that swept through Bloomington on June 25, 2024. Staff is requesting that the Board approve the pre-approved purchase in an amount not to exceed $500,000.

CITY OF BLOOMINGTON
BOARD OF PUBLIC WORKS
RESOLUTION 2024-43

APPROVAL OF SPECIAL PURCHASE UNDER EMERGENCY CONDITIONS FOR STORM DEBRIS CLEAN UP

WHEREAS, in accordance with Indiana Code § 36-9-6-2, the Board of Public Works ("Board") shall supervise the streets, alleys, public grounds, and other property of the City of Bloomington ("City"), and shall keep them in repair and good condition. The Board shall also provide for the cleaning of the City streets and alleys; and,

WHEREAS, in accordance with Indiana Code § 36-9-6-8, the Board may, by contract or otherwise, clean and sprinkle any public place within the City; and,

WHEREAS, in accordance with Indiana Code § 5-22-10-4, the Board may make a special purchase when there exists, under emergency conditions, a threat to public health, welfare, or safety; and,

WHEREAS, in accordance with Indiana Code § 5-22-10-1, the Board may make a special purchase under emergency conditions without soliciting bids or proposals; and

WHEREAS, in accordance with Indiana Code § 36-4-8-14, Bloomington Municipal Code 2.26.085, and Resolution 24-42, the Board has issued a written approval of payments pre-approved by the controller for a special purchase under emergency conditions; and

WHEREAS, on June 25, 2024, a thunderstorm with wind gusts of up to 78 mph swept through the City, uprooting and breaking tress, and causing major power outages; and

WHEREAS, the City partnered with Williams Tree Company of Martinsville to collect trees and vegetation debris from the storm in an effort to clear the right-of-way and help residents that have been affected by the storm; and

WHEREAS, the controller approved payment of expenses for the collection of trees and vegetation throughout the City in the not-to-exceed amount of $150,000 (Exhibit A) and $350,000 (Exhibit B).

NOW, THEREFORE, BE IT HEREBY RESOLVED BY THE BOARD OF PUBLIC WORKS THAT:

1. The thunderstorm that swept through the City on June 25, 2024, created an emergency condition that justifies a special purchase.

2. The payment that was pre-approved by the controller in the not-to-exceed amount of $150,000 (Exhibit A) and $350,000 (Exhibit B) for this special purchase is approved.

3. A separate file for the records of this special purchase is created.

ADOPTED THIS 30th DAY OF JULY, 2024
BOARD OF PUBLIC WORKS

_____
Kyla Cox Deckard, President

_____
Elizabeth Karon, Vice President

_____
James Roach, Secretary

Print Reset Form

City of Bloomington Emergency Purchase Justification Form

Vendor: Williams Tree Company LLC Amount: DNE $150,000

Emergency Purchase is a purchase which has been determined by the Department Head, and approved by the Controller, to be an emergency, and would cause immediate danger to health, safety or welfare, or other substantial loss to the City if not procured. This is a Special Purchasing Method as established by Indiana State Code 5-22-10, and does not require formal quotes, bids, or proposals.

PURCHASE INFORMATION

1. State the reason for the emergency purchase by explaining what the emergency is and what caused the emergency situation:

   Due to storms that took place on Tuesday, June 25, 2024 the City of Bloomington experienced heavy vegetation damage throughout the City that exceeds our current capacity. The County issued an Emergency Declaration the following day due to the extent of the damage caused by the storm.

2. State the facts that lead to the conclusion that financial or operational damage or risk of damage will occur if needs are not satisfied immediately (do not simply say that there will be damage or risk of damage):

   The urban forester estimates that approximately 2% of the City's trees were damaged or downed, representing approximately 2,000 - 3,000 trees that are currently hindering passage of the right- of- way. This scope of work exceeds the capacity of the Street Division and requires assistance from the selected vendor. Their assistance will ensure that Public Works is able to get roads, sidewalks, and pathways accessible and passible for the residents of Bloomington as we recover from this event.

3. State why the needs were not or could not be anticipated so that goods or services could not have been purchased following standard procedures:

   Due to the unforeseen damage created by this storm we are unable to remove the materials due to the extensive amount on the ground. In addition this has been declared an emergency situation requiring additional appropriations to expedite a return to normal operations that could not have been mitigated or planned for in advance.

4. State the name of the Vendor and the reason and process used for selecting this vendor (Attach all quotes or proposals received from other sources, if applicable:

   Public Works staff reached out to four commercial vegetation removal contractors with Williams Tree Service LLC being the only responsive vendor. Their proposal and letters of recommendation have been attached to the original submission request.

I certify that the above statements are true and correct, and that no other material fact or consideration offered or given has influenced this recommendation for an emergency procurement.

Michael Large	Special Projects/Operations	Public Works
Print/Type Name	Print/Type Title	Department
Department Head Signature	June 28, 2004	812-360-7268
	Date	Telephone Number

Amount: $150,000.00 Budget Line: 101-02-20000-53170

Approved by:_____ Date:_____

Jessica McClellan - Controller

4/2017

Print Reset Form

City of Bloomington Emergency Purchase Justification Form

Vendor: Williams Tree Company LLC Amount: DNE $350,000

Emergency Purchase is a purchase which has been determined by the Department Head, and approved by the Controller, to be an emergency, and would cause immediate danger to health, safety or welfare, or other substantial loss to the City if not procured. This is a Special Purchasing Method as established by Indiana State Code 5-22-10, and does not require formal quotes, bids, or proposals.

PURCHASE INFORMATION

1. State the reason for the emergency purchase by explaining what the emergency is and what caused the emergency situation:

   Due to storms that took place on Tuesday, June 25, 2024 the City of Bloomington experienced heavy vegetation damage throughout the City that exceeds our current capacity. The County issued an Emergency Declaration the following day due to the extent of the damage caused by the storm.

2. State the facts that lead to the conclusion that financial or operational damage or risk of damage will occur if needs are not satisfied immediately (do not simply say that there will be damage or risk of damage):

   The urban forester estimates that approximately 2% of the City's trees were damaged or downed, representing approximately 2,000 - 3,000 trees that are currently hindering passage of the right- of- way. This scope of work exceeds the capacity of the Street Division and requires assistance from the selected vendor. Their assistance will ensure that Public Works is able to get roads, sidewalks, and pathways accessible and passible for the residents of Bloomington as we recover from this event.

3. State why the needs were not or could not be anticipated so that goods or services could not have been purchased following standard procedures:

   Due to the unforeseen damage created by this storm we are unable to remove the materials due to the extensive amount on the ground. In addition this has been declared an emergency situation requiring additional appropriations to expedite a return to normal operations that could not have been mitigated or planned for in advance.

4. State the name of the Vendor and the reason and process used for selecting this vendor (Attach all quotes or proposals received from other sources, if applicable:

   Public Works staff reached out to four commercial vegetation removal contractors with Williams Tree Service LLC being the only responsive vendor. Their proposal and letters of recommendation have been attached to the original submission request.

I certify that the above statements are true and correct, and that no other material fact or consideration offered or given has influenced this recommendation for an emergency procurement.

Adam Wason	Public Works Director	Public Works
Print/Type Name	Print/Type Title	Department
	July 15, 2024	812-349-3516
Department Head Signature	Date	Telephone Number

Amount: $350,000.00 Budget Line: 101-02-20000-53170

Approved by: _____ Date: _____

Jessica McClellan - Controller

Staff Report

TO: **Utilities Service Board and Board of Public Works**
FROM: **Chris Wheeler, City Legal**
RE: **Request Approval of Street Sweeping MOU between CBU and Public Works**
Date: **July 30, 2024**

This Staff Report briefly outlines the proposed Street Sweeping MOU between CBU and Public Works. This MOU addresses the division of responsibilities for street sweeping operations between the two departments, a transfer of assets from Public Works to Utilities and where to dispose of street sweeping spoils. Essentially, CBU will be responsible for all regular, routine street sweeping on a day to day basis as well as at special events while Public Works will be responsible for street sweeping for call outs and paving operations throughout the City. All spoils will (excepting millings) will be disposed of in roll off containers kept and maintained by CBU. CBU will be responsible for final disposal. Finally, Public Works has street sweeping assets that it will transfer to CBU as listed in the MOU.

Staff Recommendation:	Staff recommends approval of this MOU by USB and BPW.
Board Action:	USB is scheduled to discuss and vote on the MOU on Monday, July 15, 2024. BPW is scheduled to discuss and vote on the MOU on Tuesday, July 16, 2024.
Remaining Action:	No further action required after board approval.

MEMORANDUM OF UNDERSTANDING
BETWEEN THE CITY OF BLOOMINGTON UTILITIES
AND THE CITY OF BLOOMINGTON DEPARTMENT OF PUBLIC WORKS
FOR STREET SWEEPING

This Memorandum of Understanding ("MOU") is entered into by and between the City of Bloomington Utilities Department ("CBU") by and through its Utilities Service Board ("USB") and the City of Bloomington Public Works Department ("DPW") by and through the Board of Public Works ("BPW").

WHEREAS, the City of Bloomington, Indiana ("City"), pursuant to statutory authority set out in Indiana Code Sections 36-4-9-4 and 36-4-9-5, has established a Department of Public Works which has in turn established the Street Division ("Street") which acts by and through the City's Board of Public Works, and pursuant to statutory authority set out in Indiana Code Section 36-9-23-3, has established the City of Bloomington Utilities Department which acts by and through its Utilities Service Board, who are collectively referred to as the Parties throughout this MOU; and

WHEREAS, Street is engaged in the ongoing operation of street sweeping throughout the City's corporate boundaries; and

WHEREAS, Street wishes to have CBU take over certain aspects of those street sweeping operations including, among other things, the transfer of certain identified street sweeping equipment currently housed with Street; and

WHEREAS, CBU wishes to take over those certain aspects of street sweeping operations and equipment from Street.

NOW, THEREFORE, in consideration of the mutual covenants herein contained, the Parties agree as follows:

1. For purposes of this MOU, the act of sweeping streets, or street sweeping, means any and all mechanical sweeping performed by street sweeping machines/vehicles. Street sweeping does not mean manual sweeping performed by humans without the aid of machination.

2. Street Sweeping Operations: Effective July 16, 2024, street sweeping operations shall be divided between Street and CBU as follows:
   a. Street Sweeping Operations Performed by Street: Street shall be responsible for any and all street sweeping associated with any and all call outs and paving projects throughout the City of Bloomington. Street shall continue to own, operate and maintain street sweeping equipment sufficient to fully accommodate the City of Bloomington in these ongoing needs and responsibilities.

   b. Street Sweeping Operations Performed by CBU: CBU shall be responsible for any and all street sweeping associated with any and all special events and any and all regular and routine sweeping of all city owned streets located within the City of Bloomington's municipal corporate boundaries.

3. Street Sweepings Spoils: All street sweeping spoils generated by any and all street sweeping activities shall be disposed of by the Parties into roll-offs with the exception of road millings, which shall be disposed of separately by Street. CBU shall maintain the roll offs into which the street sweeping spoils are deposited. CBU shall be responsible for all costs associated with maintenance of said roll offs and with final disposal of all street sweeping spoils.

4. Asset Transfer:
   a. Street shall transfer to CBU the following assets:
      i. 2017 Elgin Crosswind regenerative sweeper;
      ii. The manifest currently associated with street sweepings; and
      iii. All street sweeping roll off waste containers.

IN WITNESS WHEREOF, the parties hereto have executed this *Memorandum of Understanding* which shall become effective as of the date last entered below.

CITY OF BLOOMINGTON
UTILITIES SERVICE BOARD

_____
Megan Parmenter, Date
President

CITY OF BLOOMINGTON
BOARD OF PUBLIC WORKS

_____
Kyla Cox Deckard, Date
President

_____
Elizabeth Karon, Date
Vice President

_____
James Roach Date
Secretary

Board of Public Works
Staff Report

Project/Event:	Approve Change Order #1 for the Moores Pike SE Park Trail Improvements
Petitioner/Representative:	Engineering Department
Staff Representative:	Zac Rogers
Date:	July 30th, 2024

Report: This project was awarded to E&B Paving Inc. at the December 5th, 2023 meeting of the Board in the amount of $142,168.00. This change order is for an additional $1,621.54 to the contract, for a final contract amount of $143,789.54. This project realigned SE Park Trail and added a 2ft should to Moores Pike Rd.

This is a balancing change order for overrun items:

- COMPACTED AGGREGATE NO. 53 additional 8 CYS + $960.00
- CULVERT HEADWALL, CONCRETE additional .25 CYS + $625.00
- RIPRAP, REVETMENT – additional .63 TON + $36.54

Print Reset Form

City of Bloomington Contract and Purchase Justification Form

Vendor: Crider & Crider Contract Amount: $143,789.54

This form should be completed and attached to the contract documents and forwarded to the Legal Department Attorney assigned to your Department. Contracts will not be approved by the Controller if a completed form is not included with the contract documents.

PURCHASE INFORMATION

1. Check the box beside the procurement method used to initiate this procurement: (Attach a quote or bid tabulation if applicable)

- ☐ Request for Quote (RFQ)
- ☐ Request for Proposal (RFP)
- ☐ Sole Source
- ☑ Not Applicable (NA)
- ☐ Invitation to Bid (ITB)
- ☐ Request for Qualifications (RFQu)
- ☐ Emergency Purchase

2. List the results of procurement process. Give further explanation where requested.

# of Submittals: 1

	Yes	No
Met city requirements?	☑	☐
Met item or need requirements?	☑	☐
Was an evaluation team used?	☐	☑
Was scoring grid used?	☐	☑
Were vendor presentations requested?	☐	☑

	Yes	No
Was the lowest cost selected? (If no, please state below why it was not.)	☑	☐

3. State why this vendor was selected to receive the award and contract:

Construction project awarded to Crider & Crider at the December 5th, 2023 meeting of the Board of Public Works. Change Orders are being processed in compliance with the contract documents

Original	$142,168.00
Change Order #1	$1,621.54
Final	$143,789.54

Zac Rogers	Project Manager	Engineering
Print/Type Name	Print/Type Title	Department

City of Bloomington, Indiana

Change Order Details

Moores Pike - SE Park Trail Improvements

Description	Realign the SE Park Trail and add a 2ft shoulder on Moore's Pike.
Prime Contractor	Crider & Crider, Inc. 1900 Liberty Drive Bloomington, IN 47403
Change Order	1
Status	Pending
Date Created	06/21/2024
Type	Other
Summary	Balance
Change Order Description	This change order is for additional concrete and crushed aggregate used for the trail and culvert pipe improvements
Awarded Project Amount	$142,168.00
Authorized Project Amount	$142,168.00
Change Order Amount	$1,621.54
Revised Project Amount	$143,789.54

Increases/Decreases

Line Number	Item ID	Unit	Unit Price	Current		Change		Revised	
				Quantity	Amount	Quantity	Amount	Quantity	Amount
Section: 2 - Description									
0009	301-12234	CYS	$120.000	40.000	$4,800.00	8.000	$960.00	48.000	$5,760.00
COMPACTED AGGREGATE NO. 53 **Reason:** Balancing Change Order									
0012	714-09971	CYS	$2,500.000	6.000	$15,000.00	0.250	$625.00	6.250	$15,625.00
CULVERT HEADWALL, CAST-IN-PLACE REINFORCED CONCRETE **Reason:** Balancing Change Order									
0013	616-06406	TON	$58.000	19.000	$1,102.00	0.630	$36.54	19.630	$1,138.54
RIPRAP, REVETMENT **Reason:** Balancing Change Order									
3 items			Totals		$20,902.00		$1,621.54		$22,523.54

Not valid until signed by the Engineer, Contractor, and Owner

_____	_____	_____
Engineer	Contractor	Board of Public Works
_____	_____	_____
Title	Title	Title
_____	_____	_____
Date	Date	Date

Doc Express® Document Signing History

Contract: Moores Pike SE/Park Trail Improvements Document: change_order-1-20240621

This document is in the process of being signed by all required signatories using the Doc Express® service. Following are the signatures that have occurred so far.

Date	Signed By
06/25/2024	James Ford Crider & Crider, Inc Electronic Signature (Contractor Reviewed)
06/25/2024	Zac Rogers City of Bloomington Digital Signature (PM Reviewed)
	(Engineer Reviewed)
	(Funding Approved)

Board of Public Works
Staff Report

Project/Event:	Service Solutions of Bloomington Request for Sidewalk and Lane Closures
Staff Representative:	Dashiell Schonemann-Poppeliers
Petitioner/Representative:	Brian King
Date:	July 30th, 2024

Report: Service Solutions of Bloomington is requesting a 3 day lane closure during working hours and a 5 day sidewalk closure adjacent to the properties of 1200 and 1116 N College Ave. This request is to accommodate installing sewer and water service lines to the two properties, removing and widening the sidewalk adjacent to the properties, and removing and reinstalling existing pavement.

Service Solutions of Bloomington has supplied maintenance of traffic plans for both closures. Staff has requested that they provide notice to property owners about the BPW meeting and scope of their work.

[Type here]**Service Solutions of Bloomington Inc.** [Type here]

July 9th, 2024

Board of Public Works
City of Bloomington
401 North Morton Street
Bloomington, IN 47404

Re: 1200 and 1116 N College Ave sidewalk closure request.

We are requesting sidewalk closure for the replacement, installation and improvements of the existing sidewalk to be widened in conjunction with installation of new water and sewer utilities to be installed as part of the proposed property improvements for the new structures at both 1200 and 1116 N College Ave. The approved site plan improvements for both structures include installation of new sewer laterals running new lines from the structures across the sidewalk into the road to the sewer main, as well as new water lines to include a new taps at the main to cross the sidewalk to a new double meter set one for each structure between the sidewalk and the structure. The site plan includes removal and replacement of the existing sidewalk for the length of both properties at 1200 and 1116 N College Ave to increase the width of the existing sidewalk footprint. During this process when accessing the sewer main that is located within the east lane of N College ave will require lane closure during working hours and will be open after working hours using street plates. The lane closure will be 2 to 3 days. This project is proposed to be completed in 1 week in the month of July 2024.

Thank You

Brian King
President

Lane Closure sidewalk closure during working hours to access water and sewer for new service lines. Barricades will mark off lane and lane closure and Reach work ahead signs will indicate traffic restriction. Lines will be plated and open at night. sidewalk will be closed and paved back within 1 day. Signs will be used to indicate sidewalk closure. Arrow board will be used to alert traffic of lane closure.

● - Barricade
△ - Signs
→→ - Arrow board

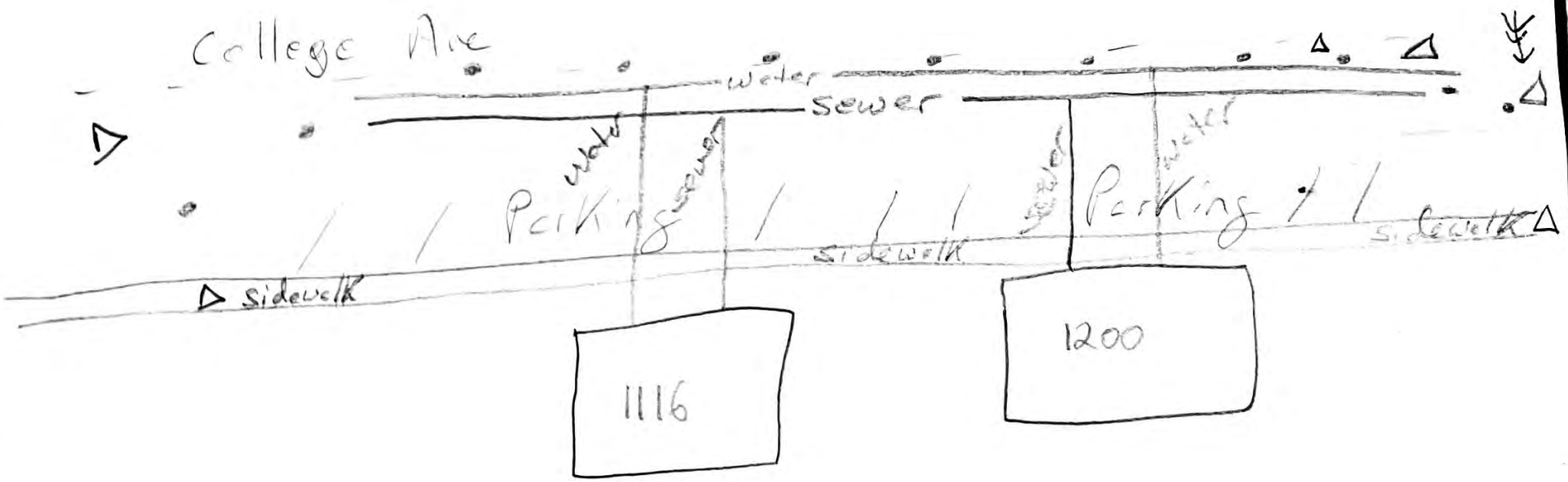

Notes for Figure 6H-33—Typical Application 33 Stationary Lane Closure on a Divided Highway

Standard:

1. **This information also shall be used when work is being performed in the lane adjacent to the median on a divided highway. In this case, the LEFT LANE CLOSED signs and the corresponding Lane Ends signs shall be substituted.**
2. **When a side road intersects the highway within the TTC zone, additional TTC devices shall be placed as needed.**

Guidance:

3. *When paved shoulders having a width of 8 feet or more are closed, channelizing devices should be used to close the shoulder in advance of the merging taper to direct vehicular traffic to remain within the traveled way.*

Option:

4. A truck-mounted attenuator may be used on the work vehicle and/or shadow vehicle.

Support:

5. Where conditions permit, restricting all vehicles, equipment, workers, and their activities to one side of the roadway might be advantageous.

Standard:

6. **An arrow board shall be used when a freeway lane is closed. When more than one freeway lane is closed, a separate arrow board shall be used for each closed lane.**

Figure 6H-33. Stationary Lane Closure on a Divided Highway (TA-33)

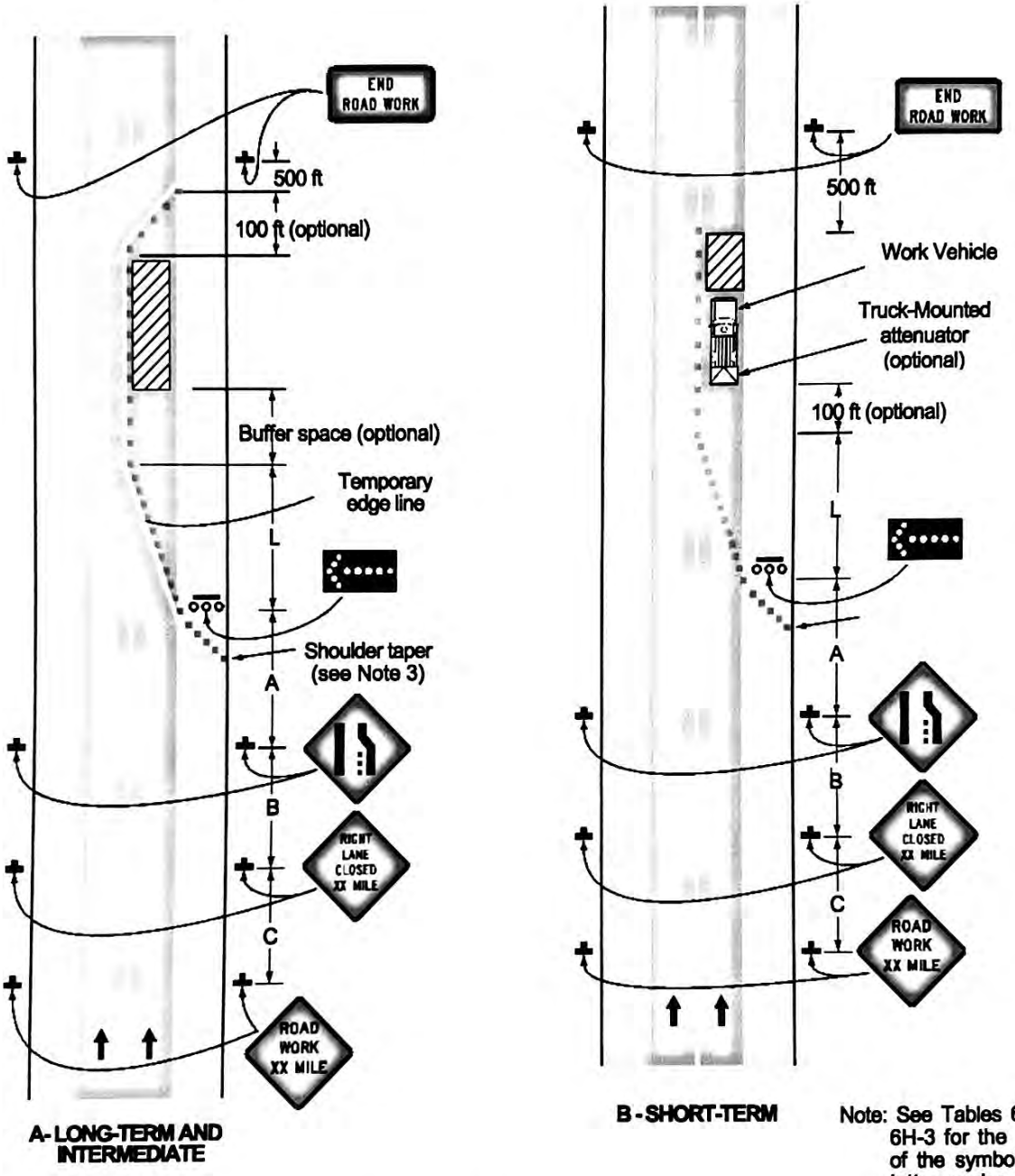

Note: See Tables 6H-2 and 6H-3 for the meaning of the symbols and/or letter codes used in this figure.

Typical Application 33

Notes for Figure 6H-28 Typical Application 28

Sidewalk Detour or Diversion

Standard:

1. **When crosswalks or other pedestrian facilities are closed or relocated, temporary facilities shall be detectable and shall include accessibility features consistent with the features present in the existing pedestrian facility.**

Guidance:

2. *Where high speeds are anticipated, a temporary traffic barrier and, if necessary, a crash cushion should be used to separate the temporary sidewalks from vehicular traffic.*
3. *Audible information devices should be considered where midblock closings and changed crosswalk areas cause inadequate communication to be provided to pedestrians who have visual disabilities.*

Option:

4. Street lighting may be considered.
5. Only the TTC devices related to pedestrians are shown. Other devices, such as lane closure signing or ROAD NARROWS signs, may be used to control vehicular traffic.
6. For nighttime closures, Type A Flashing warning lights may be used on barricades that support signs and close sidewalks.
7. Type C Steady-Burn or Type D 360-degree Steady-Burn warning lights may be used on channelizing devices separating the temporary sidewalks from vehicular traffic flow.
8. Signs, such as KEEP RIGHT (LEFT), may be placed along a temporary sidewalk to guide or direct pedestrians.

Figure 6H-28. Sidewalk Detour or Diversion (TA-28)

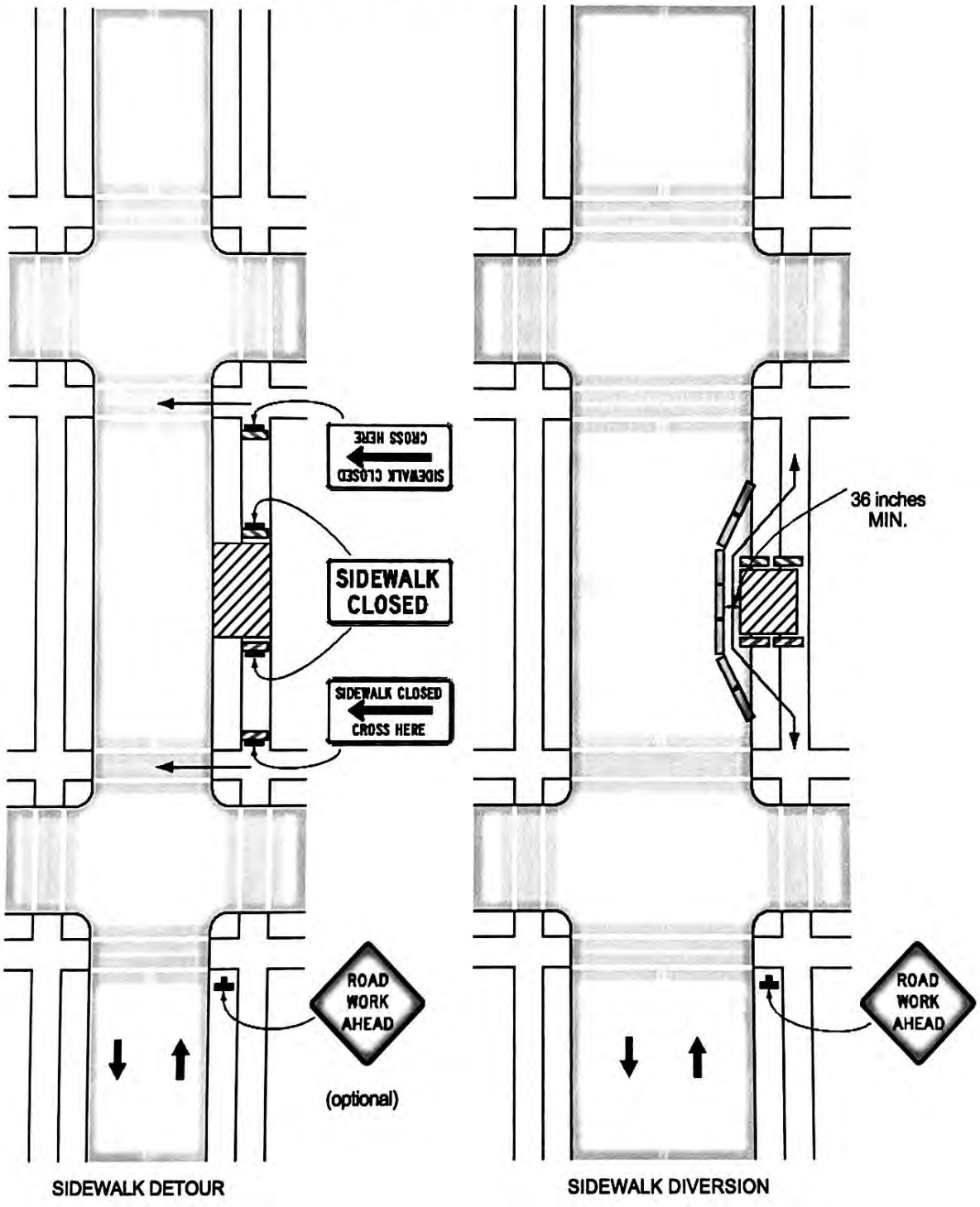

Typical Application 28

Note: See Tables 6H-2 and 6H-3 for the meaning of the symbols and/or letter codes used in this figure.

Lane Closure sidewalk closure during working hours to access water and sewer for new service lines. Barricades will Mark off lane closure and Road work ahead signs will indicate traffic restriction. Lines will be plated and open at night. sidewalk will be closed and paved back within 1 days. Signs will be used to indicate sidewalk closure. Arrow board will be used to alert traffic of lane closure.

● - Barricade
△ - Signs
→→ - Arrow board

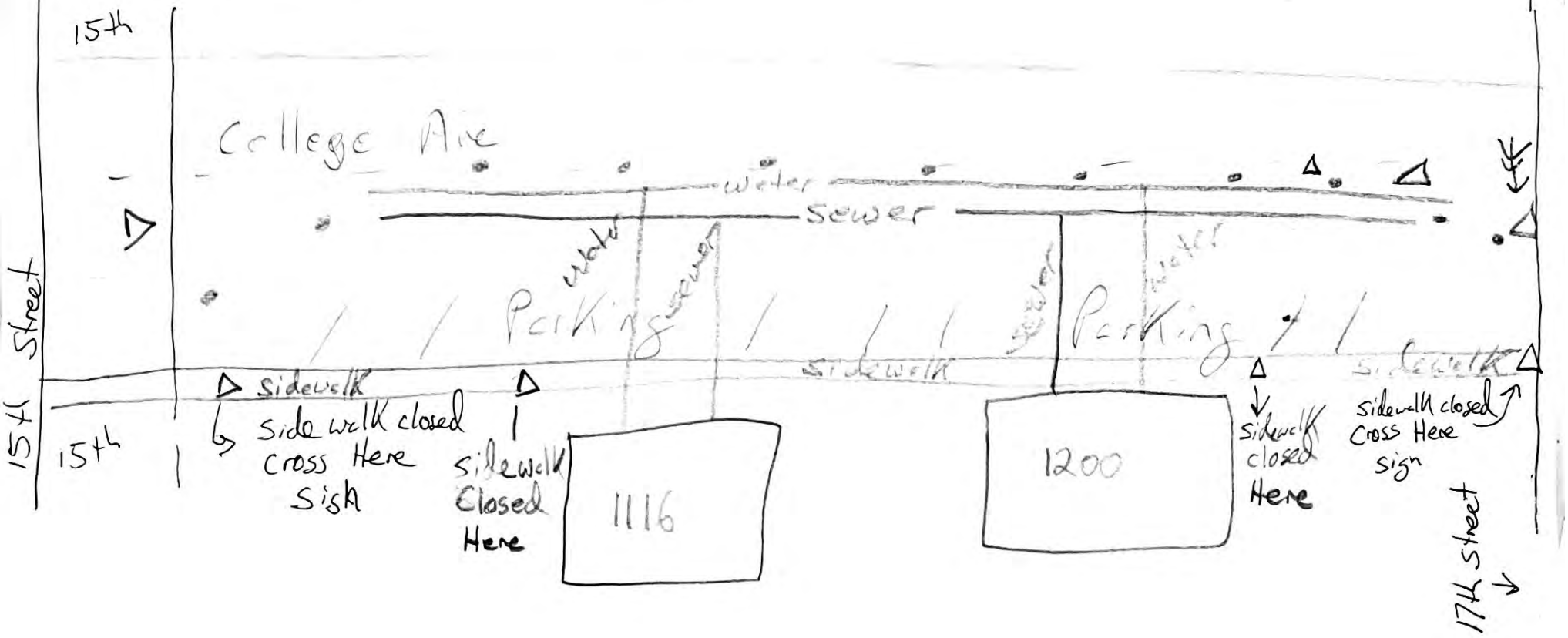

2 →

Board of Public Works
Staff Report

Project/Event:	Project Contract Award
Petitioner/Representative:	Engineering Department
Staff Representative:	Jason Kerr
Date:	July 30th, 2024

Report: This project is for updating curb ramps, repairing sidewalks, and milling and paving along W 3rd St from Franklin Rd to Patterson Dr. This project will have temporary lane closures during construction. This project is partially funded through a Community Crossing Matching Grant award. Engineering request that BPW award this project to E&B Paving. E&B Paving is the lowest responsible and responsive bidder. The Form 96, Section III was missing within the bidding documents submitted. It is a minor variance from the invitation to bid and because the Board has reserved the right to waive a minor requirement, staff recommends that the Board waive that requirement and award the contract to the lowest bidder. This has been sent into us via email and is completed currently. We feel this was a minor issue and we still ask that this project be awarded to E&B Paving. The bid from E&B Paving is in the amount of $1,060,200.00.

Print Reset Form

City of Bloomington Contract and Purchase Justification Form

Vendor: E&B Paving Contract Amount: $1,060,200.00

This form should be completed and attached to the contract documents and forwarded to the Legal Department Attorney assigned to your Department. Contracts will not be approved by the Controller if a completed form is not included with the contract documents.

PURCHASE INFORMATION

1. Check the box beside the procurement method used to initiate this procurement: (Attach a quote or bid tabulation if applicable)

- ☐ Request for Quote (RFQ)
- ☐ Request for Proposal (RFP)
- ☐ Sole Source
- ☐ Not Applicable (NA)
- ☑ Invitation to Bid (ITB)
- ☐ Request for Qualifications (RFQu)
- ☐ Emergency Purchase

2. List the results of procurement process. Give further explanation where requested.

# of Submittals: N/A

	Yes	No
Met city requirements?	☑	☐
Met item or need requirements?	☑	☐
Was an evaluation team used?	☐	☑
Was scoring grid used?	☐	☑
Were vendor presentations requested?	☐	☑

	Yes	No
Was the lowest cost selected? (If no, please state below why it was not.)	☑	☐

This is for the awarding of the bid for the W 3rd St Maintenance Project to E&B Paving.

3. State why this vendor was selected to receive the award and contract:

Contract Price $1,060,200.00

Jason Kerr	Project Manager	Engineering
Print/Type Name	Print/Type Title	Department

AGREEMENT

BETWEEN

CITY OF BLOOMINGTON

ENGINEERING DEPARTMENT

AND

CONTRACTOR

FOR

W 3RD ST MAINTENANCE PROJECT (FRANKLIN RD TO PATTERSON DR)

THIS AGREEMENT, executed by and between the City of Bloomington, Indiana, Engineering Department through the Board of Public Works (hereinafter CITY), and **E&B PAVING**, (hereinafter CONTRACTOR);

WITNESSETH THAT:

WHEREAS, CITY desires to retain CONTRACTOR'S services for milling and resurfacing (more particularly described in Attachment A, "Scope of Work"); and

WHEREAS, CONTRACTOR is capable of performing work as per his/her Bid on the Bid Summary sheet; and

WHEREAS, in accordance with Indiana Code 5-16-13 *et seq*., incorporated herein by reference, Contractor is a Tier 1 or General Contractor for this project; and

WHEREAS, CONTRACTOR was determined to be the lowest responsible and responsive Bidder for said project.

NOW, THEREFORE, in consideration of the mutual promises hereinafter enumerated, the parties agree as follows:

ARTICLE 1. TERM

1.01 This Agreement shall be in effect upon execution of this Agreement by all parties. In accordance with Indiana Code 5-16-13 *et seq*., incorporated herein by reference, Contractor is a Tier 1 contractor or general contractor for this project.

ARTICLE 2. SERVICES

2.01 Contractor shall complete all Work as specified or indicated in the Contract Documents. The Work is generally described in Attachment A, "Scope of Work".

2.02 All work required under this Agreement shall be substantially completed by the CONTRACTOR within one-hundred (100) calendar days from the date of the Notice to Proceed, unless the parties mutually agree to a later completion date. Substantial Completion shall mean that all work is sufficiently completed in accordance with the plans and specifications, as modified by any approved change orders, so that it can be used for its intended purpose.

2.03 It is hereby understood by both parties that time is of the essence in this Agreement. Failure of CONTRACTOR to complete all work as herein provided will result in monetary damages to CITY. It is hereby agreed that CITY will be damaged for every day the work has not been performed in the manner herein provided and that the measure of those damages shall be determined by reference Section 13.00 of the General Conditions for Each Day of Overrun in Contract Time. CONTRACTOR agrees to pay CITY said damages or, in the alternative, CITY, at its sole discretion, may withhold monies otherwise due CONTRACTOR. It is expressly understood by the parties hereto that these damages relate to the time of performance and do not limit CITY's other remedies under this Agreement, or as provided by applicable law, for other damages.

2.04 CONTRACTOR agrees that no charges or claims for damages shall be made by him or her for any delays or hindrances, from any cause whatsoever during the progress of any portion of the services specified in the Agreement. Such delays or hindrances, if any, may be compensated for by an extension of time for a reasonable period as may be mutually agreed upon between the parties, it being understood, however, that permitting CONTRACTOR to proceed to complete any service, or any part of the services / project, after the date to which the time of completion may have been extended, shall in no way operate as a waiver on the part of CITY of any of its rights herein.

ARTICLE 3. COMPENSATION

3.01 CONTRACTOR shall provide services as specified in Attachment A, "Scope of Work", attached hereto and incorporated into this Agreement.

3.02 Owner shall pay Contractor for completion of the Work in accordance with the Contract Documents, subject to adjustment under the Contract, at the unit prices stated in Contractor's Bid, attached hereto as Attachment 'E'. CITY may withhold payment, in whole or in part, to the extent necessary to protect itself from a loss on account of any of the following:

Defective work.

Evidence indicating the probable filing of claims by other parties against CONTRACTOR which may adversely affect CITY.

Failure of CONTRACTOR to make payments due to subcontractors, material suppliers or employees.

Damage to CITY or a third party.

3.03 The submission of any request for payment shall be deemed a waiver and release by CONTRACTOR of all liens and claims with respect to the work and period to which such payment request pertains except as specifically reserved and noted on such request.

3.04 CONTRACTOR shall maintain proper account records for the scope of all services of this Agreement and provide an accounting for all charges and expenditures as may be necessary for audit purposes. All such records shall be subject to inspection and examination by CITY's representatives at reasonable business hours.

3.05 For projects utilizing federal funding the CONTRACTOR shall submit time sheets (WH-347) for his or her own and all subcontracted employees, to City Engineer or his or her representative for approval and review, including review for compliance with Davis Bacon requirements, if federal funds are used.

3.06 **Engineer** The City Engineer shall act as the CITY's representative and assume all duties and responsibilities and have all the rights and authority assigned to the Engineer in the Contract Documents in connection with completion of the Work in accordance with the Contract Documents.

ARTICLE 4. RETAINAGE

For contracts in excess of $100,000 and for which Contractor requested Progressive Payments on its Bid Form, the Owner requires that retainage be held as set out below.

4.02 **Retainage Amount** The retainage amount shall be five percent (5%) of the dollar value of all work satisfactorily completed and shall be withheld until the Contract work is complete. The retainage amount shall be placed in an escrow account with an escrow agent or shall be held by the Board of Public Works ("Board"). Yellow Cardinal Group Columbus, Indiana, shall serve as the escrow agent.

4.03 **Escrow Agent** If an escrow agent is used, the escrow agent, Owner and Contractor shall enter into a written escrow agreement and Contractor shall work directly with the escrow agent to set up the account. The escrow agent shall invest all escrowed principal in obligations selected by the escrow agent. The escrow agent shall be compensated for the agent's services by a reasonable fee, agreed upon by the parties, that is comparable with fees charged for the handling of escrow accounts of similar size and duration. The fee shall be paid from the escrow income. The escrow agent's fee may be determined by specifying an amount of interest the escrow agent will pay on the escrowed amount, with any additional earned interest serving as the escrow agent's fee. The escrow agreement may include other terms and conditions as deemed necessary by the parties. However, if Contractor intends to receive a Single Lump Sum payment upon acceptance of this project, retainage will not be required and an Escrow Agreement will not be required.

4.04 **Board** If the retainage is held by the Board, the Owner shall place the funds so retained in a retainage account with the Board. Such deposit shall be made within three business days after the date such payments are made to Contractor. No income will be earned or will be payable on the deposit.

4.05 **Payment of Escrow Amount** The escrow agent shall hold the escrowed principal and income until receipt of the notice from Owner and Contractor that the Contract work has been substantially completed to the reasonable satisfaction of Owner, at which time Owner shall pay to the Contractor the balance to be paid under this Contract and execute such documents as are necessary to authorize the escrow agent to pay to the Contractor the funds in the escrow account, including both specifying the part of the escrowed principal to be released from the escrow and the person to whom that portion is to be released. After receipt of the notice, the escrow agent shall remit the designated part of the escrowed principal and the escrowed income, minus the escrow agent's fees, to the person specified in the notice. However, nothing in this section shall prohibit Owner from requiring the escrow agent to withhold amounts necessary to complete minor items of the Contract, following substantial completion of the Contract in accordance with the provisions of paragraph 4.07.

4.06 Payment of Retainage Amount by the Board The Board shall hold the retainage until notice from the Owner that the Contract work has been substantially completed to the reasonable satisfaction of the Owner. At this time, the Owner shall pay to the Contractor the balance to be paid under this Contract and execute such documents as are necessary to authorize the Board to pay the Contractor the retainage. No interest will have been earned or will be payable. Nothing in this section shall prohibit Owner from requiring the Board to withhold amounts necessary to complete minor items of the Contract, following substantial completion of the Contract in accordance with the provisions of paragraph 4.07.

4.07 Withholding Funds for Completion of Contract If, upon substantial completion of the Contract, there still remains minor Contract work that needs to be completed, or minor Contract work that needs to be performed to the satisfaction of the Owner, the Owner may direct the escrow agent or the Board to retain and withhold from payment to the Contractor, an amount equal to two hundred percent (200%) of the value of said work. The value of said work shall be determined by the architect/engineer. The escrow agent or the Board shall release the funds withheld under this section after receipt of notice from the Owner that all work on the Contract has been satisfactorily completed. In the event that said work is not completed by the Contractor, but by the Owner or another party under contract with Owner, said funds shall be released to Owner.

ARTICLE 5. GENERAL PROVISIONS

5.01 CONTRACTOR agrees to indemnify and hold harmless CITY and its officers, agents, officials and employees for any and all claims, actions, causes of action, judgments and liens arising out of any negligent act or omission by CONTRACTOR or any of its officers, agents, officials, employees, or subcontractors or any defect in materials or workmanship of any supply, materials, mechanism or other product or service which it or any of its officers, agents, officials, employees, or subcontractors has supplied to CITY or has used in connection with this Agreement and regardless of whether or not it is caused in part by a party indemnified herein under. Such indemnity shall include attorney's fees and all costs and other expenses arising there from or incurred in connection therewith and shall not be limited by reason of the enumeration of any insurance coverage required herein.

CONTRACTOR shall indemnify and hold harmless CITY and its officers, agents, officials and employees for any and all damages, actions, costs, (including, but not limited to, attorney's fees, court costs and costs of investigation) judgments and claims by anyone for damage to property, injury or death to persons resulting from the collapse or failure of any trenches, ditches or other excavations constructed under or associated with this contract.

5.02 Abandonment, Default and Termination

5.02.01 CITY shall have the right to abandon the work contracted for in this Agreement without penalty. If CITY abandons the work described herein, CONTRACTOR shall deliver to CITY all surveys, notes, drawings, specifications and estimates completed or partially completed and these shall become the property of CITY. The earned value of the work performed shall be based upon an estimate of the proportion between the work performed by CONTRACTOR under this Agreement and the work which CONTRACTOR was obligated to perform under this Agreement. This proportion shall be mutually agreed upon by CITY and CONTRACTOR. The payment made to CONTRACTOR shall be paid as a final payment in full settlement of his or her services hereunder.

5.02.02 If CONTRACTOR defaults or fails to fulfill in a timely and proper manner the obligations pursuant to this Agreement, CITY may, after seven (7) days' written notice has been delivered to CONTRACTOR, and without prejudice to any other remedy it may have, make good such deficiencies and may deduct the cost thereof from the payment then or thereafter due to CONTRACTOR. In the alternative, CITY, at its option, may terminate this Agreement and take possession of the site and of all materials, equipment, tools and construction equipment and machinery thereon owned by CONTRACTOR, and may finish the project by whatever method it may deem expedient, and if the such action exceeds the unpaid balance of the sum amount, CONTRACTOR or his or her surety, shall pay the difference to CITY.

5.02.03 Default: If CONTRACTOR breaches this Agreement or fails to perform the work in an acceptable manner, he or she shall be considered in default. Any one or more of the following will be considered a default:

Failure to begin the work under this Agreement within the time specified.

Failure to perform the work with sufficient supervision, workmen, equipment and materials to insure prompt completion of said work within the time limits allowed.

Unsuitable performance of the work as determined by CITY ENGINEER or his or her representative.

Neglecting or refusing to remove defective materials or failure to perform anew such work as shall have been rejected.

Discontinuing the prosecution of the work or any part of it.

Inability to finance the work adequately.

If, for any other reason, CONTRACTOR breaches this Agreement or fails to carry on the work in an acceptable manner.

5.02.04 CITY shall send CONTRACTOR a written notice of default. If CONTRACTOR, or his or her Surety, within a period of ten (10) days after such notice, fails to remedy the default, then CITY shall have full power and authority, without violation of the Contract, to take the prosecution of the work out of the hands of said CONTRACTOR, to appropriate or use any or all materials and equipment on the ground as may be suitable and acceptable, and may, at its option, turn the work over to the Surety, or enter into an agreement with another Contractor for the completion of the Agreement according to the terms and provisions thereof, or CITY may use such other methods as, in its opinion, shall be required for the completion of said Contract in an acceptable manner.

5.02.05 All cost of completing the work under the Contract shall be deducted from the monies due or which may become due to said CONTRACTOR. In case the expenses so incurred by CITY shall be less than the sum which would have been payable under the Contract if it had been completed by said CONTRACTOR, CONTRACTOR shall be entitled to receive the difference. However, in case such expense shall exceed the sum which would have been payable under the Contract, CONTRACTOR and his or her Surety will be liable and shall pay to CITY the amount of said excess. By taking over the prosecution of the work, CITY does not forfeit the right to recover damages from CONTRACTOR or his or her Surety for his or her failure to complete the work in the time specified.

5.02.06 Notwithstanding any other provision of this Agreement, if funds for the continued fulfillment of the Agreement by CITY are at any time not forthcoming or are insufficient, through failure of any entity to appropriate the funds or otherwise, then CITY shall have the right to terminate this Agreement without penalty by giving prior written notice documenting the lack of funding in which instance, unless otherwise agreed to by the parties, this Agreement shall terminate and become null and void.

5.02.07 CITY agrees that it will make its best effort to obtain sufficient funds, including but not limited to, including in its budget for each fiscal period during the term hereof a request for sufficient funds to meet its obligations hereunder in full.

5.03 Successors and Assigns

5.03.01 Both parties agree that for the purpose of this Agreement, CONTRACTOR shall be an Independent Contractor and not an employee of CITY.

5.03.02 No portion of this Agreement shall be sublet, assigned, transferred or otherwise disposed of by CONTRACTOR except with the written consent of CITY being first obtained. Consent to sublet, assign, transfer, or otherwise dispose of any portion of this Agreement shall not be construed to relieve CONTRACTOR of any responsibility of the fulfillment of this Agreement.

5.04 Extent of Agreement: Integration

5.04.01 This Agreement consists of the following parts, each of which is as fully a part of this Agreement as if set out herein:

1. This Agreement and its Attachments.
2. All Written Amendments and other documents amending, modifying, or supplementing the Contract Documents which may be delivered or issued after the Effective Date of the Agreement and are not attached hereto.
3. All Addenda to the Bid Documents.
4. The Invitation to Bidders.
5. The Instructions to Bidders.
6. The Special Conditions.
7. All plans as provided for the work that is to be completed.
8. The Supplementary Conditions.
9. The General Conditions.
10. The Specifications.
11. The current Indiana Department of Transportation Standard Specifications and the latest addenda.
12. CONTRACTOR'S submittals.
13. The Performance Bond and the Payment Bond.
14. The Escrow Agreement.
15. Request for Taxpayer Identification number and certification: Substitute W-9.

5.04.02 In resolving conflicts, errors, discrepancies and disputes concerning the Scope of Work to be performed by CONTRACTOR, and other rights and obligations of CITY and CONTRACTOR, the document expressing the greater quantity, quality or other scope of work in question, or imposing the greater obligation upon CONTRACTOR and affording the greater right or remedy to CITY shall govern; otherwise the documents shall be given precedence in the order as enumerated above.

5.05 Insurance

5.05.01

CONTRACTOR shall, as a prerequisite to this Agreement, purchase and thereafter maintain such insurance as will protect him or her from the claims set forth below which may arise out of or result from CONTRACTOR'S operations under this Agreement,

whether such operations be by CONTRACTOR or by any SUBCONTRACTORS or by anyone directly or indirectly employed by any of them, or by anyone for whose acts any of them may be liable:

Coverage		Limits
A.	Worker's Compensation & Disability	Statutory Requirements
B.	Employer's Liability Bodily Injury by Accident	$100,000 each accident
	Bodily Injury by Disease	$500,000 policy limit
	Bodily Injury by Disease	$100,000 each employee
C.	Commercial General Liability (Occurrence Basis) Bodily Injury, personal injury, property damage, contractual liability, products-completed operations, General Aggregate Limit (other than Products/Completed Operations)	$1,000,000 per occurrence and $2,000,000 in the aggregate
	Products/Completed Operation	$1,000,000
	Personal & Advertising Injury Limit	$1,000,000
	Each Occurrence Limit	$1,000,000
	Fire Damage (any one fire)	$50,000
D.	Comprehensive Auto Liability (single limit, owned, hired and non-owned)	$1,000,000 each accident
	Bodily injury and property damage	
E.	Umbrella Excess Liability	$5,000,000 each occurrence and aggregate
	The Deductible on the Umbrella Liability shall not be more than	$10,000

5.05.02 CONTRACTOR'S comprehensive general liability insurance shall also provide coverage for the following:

Premises and operations;

Contractual liability insurance as applicable to any hold-harmless agreements;

Completed operations and products; which also must be maintained for a minimum period of two (2) years after final payment and CONTRACTOR shall continue to provide evidence of such coverage to CITY on an annual basis during the aforementioned period;

Broad form property damage - including completed operations;

Fellow employee claims under Personal Injury; and

Independent Contractors.

5.05.03 With the prior written approval of CITY, CONTRACTOR may substitute different types or amounts of coverage for those specified as long as the total amount of required protection is not reduced.

5.05.04 Certificates of Insurance showing such coverage then in force (but not less than the amount shown above) shall be on file with CITY prior to commencement of work. These Certificates shall contain a provision that coverage afforded under the policies will not be canceled or non-renewed until at least sixty (60) days' prior written notice has been received by CITY. The CITY shall be named as an additional insured on the Commercial General Liability, Automobile Liability, and Umbrella Excess Liability policies. The CONTRACTOR shall agree to a waiver of subrogation on its Worker's Compensation policy.

5.06 Necessary Documentation CONTRACTOR certifies that it will furnish CITY any and all documentation, certification, authorization, license, permit or registration required by the laws or rules and regulations of the City of Bloomington, the State of Indiana and the United States. CONTRACTOR further certifies that it is now and will maintain in good standing with such governmental agencies and that it will keep its license, permit registration, authorization or certification in force during the term of this Agreement.

5.07 Applicable Laws CONTRACTOR agrees to comply with all federal, state, and local laws, rules and regulations applicable to CONTRACTOR in performing work pursuant to this Agreement, including, but not limited to, discrimination in employment, prevailing wage laws, conflicts of interest, public notice, accounting records and requirements. CONTRACTOR shall comply with City of Bloomington Ordinance 2.21.020 and all other federal, state and local laws and regulations governing non-discrimination, including but not limited to employment. This Agreement shall be governed by the laws of the United States, and the State of Indiana, and by all Municipal Ordinances and Codes of the City of Bloomington. Venue of any disputes arising under this Agreement shall be in the Monroe Circuit Court, Monroe County, Indiana.

5.08 Non-Discrimination

5.08.01 CONTRACTOR and subcontractors shall not discriminate against any employee or applicant for employment, to be employed in the performance of this Agreement, with respect to hire, tenure, terms, training, conditions or privileges of employment, because of race, sex, color, religion, national origin, ancestry, disability, sexual orientation, gender identity, veteran status or housing status. Breach of this covenant may be regarded as a material breach of the Agreement.

5.08.02 CONTRACTOR certifies for itself and all its subcontractors compliance with existing laws of the City of Bloomington, the State of Indiana and the United States regarding:

Prohibition of discrimination in employment practices on the basis of race, sex, color, religion, national origin, ancestry, disability, sexual orientation, gender identity, veteran status, housing status, or any other legally protected classification;

The utilization of Minority and Women Business Enterprises. CONTRACTOR further certifies that it:

a. Has formulated its own Affirmative Action plan for the recruitment, training and employment of minorities and women, including goals and timetable; which has been approved by the City's Contract Compliance Officer.

b. Encourages the use of small business, minority-owned business and women-owned business in its operations.

CONTRACTOR understands that the City of Bloomington prohibits its employees from engaging in harassment or discrimination of any kind, including harassing or discriminating against independent contractors doing work for the City. If CONTRACTOR believes that a City employee engaged in such conduct towards CONTRACTOR and/or any of its employees, CONTRACTOR or its employees may file a complaint with the City department head in charge of the CONTRACTOR'S work and/or with the City human resources department or the Bloomington Human Rights Commission. The City takes all complaints of harassment and discrimination seriously and will take appropriate disciplinary action if it finds that any City employee engaged in such prohibited conduct.

5.08.03 FURTHER, PURSUANT TO INDIANA CODE 5-16-6-1, CONTRACTOR AGREES:

A) That in the hiring of employees for the performance of work under this Agreement or any sub agreement hereunder, no contractor, or subcontractor, nor any person acting on behalf of such CONTRACTOR or subcontractor, shall by reason of race, sex, color, religion, national origin, ancestry, or any other legally protected classification, discriminate against any citizen of the State of Indiana who is qualified and available to perform the work to which the employment relates.

B) That no contractor, subcontractor, or any person on their behalf, shall, in any manner, discriminate against or intimidate any employee hired for performance of work under this Agreement on account of race, religion, color, sex, national origin, ancestry, or any other legally protected classification.

C) That there may be deducted from the amount payable to CONTRACTOR, by CITY, under this Agreement, penalty of Five Dollars ($5.00) for each person for each calendar day during which such person was discriminated against or intimidated in violation of the provisions of this Agreement. Any such person discriminated against retains the right to file a discrimination complaint with the appropriate civil rights agency or court.

D) That this Agreement may be canceled or terminated by CITY and all money due or to become hereunder may be forfeited, for a second or any subsequent violations of the terms or conditions under this section of the Agreement.

5.09 Workmanship and Quality of Materials

5.09.01 CONTRACTOR shall guarantee the work for a period of one (1) year from the date of substantial completion. Failure of any portion of the work within one (1) year due to improper construction, materials of construction, or design may result in a refund to CITY of the purchase price of that portion which failed or may result in the forfeiture of CONTRACTOR's Performance Bond.

5.09.02 OR EQUAL: Wherever in any of the Agreement Documents an article, material or equipment is defined by describing a proprietary product, or by using the name of a manufacturer or vender, the term "Or Equal" or the term "The Equivalent" if not inserted, shall be implied, and it is done for the express purpose of establishing a basis of durability and efficiency and not for the purpose of limiting completion. Whenever material or equipment is submitted for approval as being equal to that specified, the submittal shall include sufficient information and data to demonstrate that the material or equipment conforms to the Contract requirements. The decision as to whether or not such material or equipment is equal to that specified shall be made by the ENGINEER. The approval by the ENGINEER of alternate material or equipment as being equivalent to that specified, shall not in any way relieve CONTRACTOR of responsibility for failure of the material or equipment due to faulty design, material, or workmanship, to perform the function required by the Contract Documents. Specifications as determined by other entities within the City of Bloomington such as City Utilities shall only be substituted or changed by their approval which shall be submitted in writing to the ENGINEER.

5.09.03 CITY shall be the sole judge of the sufficiency of workmanship and quality of materials. Disputes shall be resolved by the City Engineer and are not subject to arbitration.

5.10 Safety. CONTRACTOR shall be responsible for the safety of employees at all times and shall provide all equipment necessary to insure their safety. CONTRACTOR shall ensure the enforcement of all applicable safety rules, regulations, ordinances and laws, whether federal, state or local. Contractor's Superintendent of Safety shall make daily inspections upon the arrival and leaving of the site at the close of each workday.

5.10.01 CONTRACTOR is required to comply with IOSHA regulations 29 C.F.R 1926, Subpart P, Excavations for all trenches of at least five (5) feet in depth. All cost for trench safety systems shall be the responsibility of the CONTRACTOR and included in the cost of the principal work with which the safety systems are associated. CONTRACTOR shall sign an affidavit, attached as Attachment B, affirming that CONTRACTOR shall maintain compliance with IOSHA requirements for excavations of at least five (5) in depth.

5.11 Amendments/Changes

5.11.01 Except as provided in Paragraph 5.11.02, this Agreement may be amended only by written instrument signed by both CITY and CONTRACTOR.

5.11.02 Without invalidating the Agreement and without notice to any surety, CITY may, at any time or from time to time, order, in writing, additions, deletions, or revisions in the work. Upon receipt of any such document, CONTRACTOR shall promptly proceed with the work involved, which will be performed under the applicable conditions of the Agreement Documents.

5.11.03 If CONTRACTOR believes that any direction of CITY under paragraph 5.11.02, or any other event or condition, will result in an increase in the Contract time or price, he or she shall file written notice with CITY no later than twenty (20) calendar days after the occurrence of the event giving rise to the claim and stating the general nature of the claim with supporting data. No claim for any adjustment of the Contract time or price will be valid if not submitted in accordance with this Paragraph.

5.11.04 CONTRACTOR shall carry on the work and adhere to the progress schedule during all disputes or disagreements with CITY. No work shall be delayed or postponed pending resolution of any dispute or disagreement except as CONTRACTOR and CITY may otherwise agree in writing.

5.12 Performance Bond and Payment Bond

5.12.01 For contracts in excess of $100,000, CONTRACTOR shall provide CITY with a Performance Bond and a Payment Bond in the amount of one hundred percent (100%) of the contract amount.

5.12.02 Failure by CONTRACTOR to perform the work in a timely or satisfactory fashion may result in forfeiture of CONTRACTOR'S Performance Bond.

5.12.03 If the surety on any bond furnished by CONTRACTOR becomes a party to supervision, liquidation, or rehabilitation action pursuant Indiana Code 27-9 et seq. or its right to do business in the State of Indiana is terminated, CONTRACTOR shall, within thirty (30) calendar days thereafter, substitute another bond and surety, both of which must be acceptable to CITY.

5.13 Payment of Subcontractors CONTRACTOR shall pay all subcontractors, laborers, material suppliers and those performing services to CONTRACTOR on the project under this Agreement. CITY may, as a condition precedent to any payment hereunder, require CONTRACTOR to submit satisfactory evidence of payments of any and all claims of subcontractors, laborers, material suppliers, and those furnishing services to CONTRACTOR. Upon receipt of a lawful claim, CITY shall withhold money due to CONTRACTOR in a sufficient amount to pay the subcontractors, laborers, material suppliers, and those furnishing services to CONTRACTOR.

5.13.01 The surety of the Payment Bond and Performance Bond may not be released until one (1) year after the Board's final settlement with the CONTRACTOR.

5.14 **Written Notice** Written notice shall be considered as served when delivered in person or sent by mail to the individual, firm, or corporation, or to the last business address of such known to CONTRACTOR who serves the Notice. Notice shall be sent as follows:

TO CITY: TO CONTRACTOR:

City of Bloomington		E&B Paving
Attn: Jason Kerr		Attn: Garrettt Gough
P.O. Box 100 Suite 130		2520 W Industrial Park Dr
Bloomington, Indiana 47402		Bloomington, IN 47404

5.15 **Severability and Waiver** In the event that any clause or provision of this Agreement is held to be invalid by any court of competent jurisdiction, the invalidity of such clause or provision shall not affect any other provision of this Agreement. Failure of either party to insist on strict compliance with any provision of this Agreement shall not constitute waiver of that party's right to demand later compliance with the same or other provisions of this Agreement.

5.16 **Notice to Proceed** CONTRACTOR shall not begin the work pursuant to the "Scope of Work" of this Agreement until it receives an official written Notice to Proceed from the City. Contractor shall start active and continuous work on the Agreement within fifteen (15) calendar days after the date of the Notice to Proceed. In no case shall work begin prior to the date of the Notice to Proceed. If a delayed starting date is indicated in the proposal, the fifteen (15) calendar day limitation will be waived. Work day charges will then begin on a date mutually agreed upon, but not later than the delayed starting date specified. In the event that any Agreement is canceled after an award has been made but prior to the issuing of the Notice to Proceed, no reimbursement will be made for any expenses accrued relative to this contract during that period.

5.17 **Steel or Foundry Products**

5.17.01 To comply with Indiana Code 5-16-8, affecting all contracts for the construction, reconstruction, alteration, repair, improvement or maintenance of public works, the following provision shall be added: If steel or foundry products are to be utilized or supplied in the performance of any contract or subcontract, only domestic steel or foundry products shall be used. Should CITY feel that the cost of domestic steel or foundry products is unreasonable; CITY will notify CONTRACTOR in writing of this fact.

5.17.02 Domestic Steel products are defined as follows:

> "Products rolled, formed, shaped, drawn, extruded, forged, cast, fabricated or otherwise similarly processed, or processed by a combination of two (2) or more of such operations, from steel made in the United States by open hearth, basic oxygen, electric furnace, Bessemer or other steel making process."

5.17.03 Domestic Foundry products are defined as follows:

> "Products cast from ferrous and nonferrous metals by foundries in the United States."

5.17.04 The United States is defined to include all territory subject to the jurisdiction of the United States.

5.17.05 CITY may not authorize or make any payment to CONTRACTOR unless CITY is satisfied that CONTRACTOR has fully complied with this provision.

5.18 **Verification of Employees' Immigration Status**

Contractor is required to enroll in and verify the work eligibility status of all newly-hired employees through the E-Verify program. (This is not required if the E-Verify program no longer exists). Contractor shall sign an affidavit, attached as Attachment C, affirming that Contractor does not knowingly employ an unauthorized alien. "Unauthorized alien" is defined at 8 U.S. Code 1324a(h)(3) as a person who is not a U.S. citizen or U.S. national and is not lawfully admitted for permanent residence or authorized to work in the U.S. under 8 U.S. Code Chapter 12 or by the U.S. Attorney General.

Contractor and any of its subcontractors may not knowingly employ or contract with an unauthorized alien, or retain an employee or contract with a person that the Contractor or any of its subcontractors learns is an unauthorized alien. If the City obtains information that the Contractor or any of its subcontractors employs or retains an employee who is an unauthorized alien, the City shall notify the Contractor or its subcontractors of the Agreement violation and require that the violation be remedied within thirty (30) calendar days of the date of notice. If the Contractor or any of its subcontractors verify the work eligibility status of the employee in question through the E-Verify program, there is a rebuttable presumption that the Contractor or its subcontractor did not knowingly employ an unauthorized alien. If the Contractor or its subcontractor fails to remedy the violation within the thirty (30) calendar day period, the City shall terminate the Agreement, unless the City determines that terminating the Agreement would be detrimental to the public interest or public property, in which case the City may allow the

Agreement to remain in effect until the City procures a new contractor. If the City terminates the Agreement, the Contractor or its subcontractor is liable to the City for actual damages.

Contractor shall require any subcontractors performing work under this Agreement to certify to the Contractor that, at the time of certification, the subcontractor does not knowingly employ or contract with an unauthorized alien and the subcontractor has enrolled in and is participating in the E-Verify program. Contractor shall maintain on file all subcontractors' certifications throughout the term of this Agreement with the City.

5.19 Drug Testing Plan

In accordance with Indiana Code 4-13-18 as amended, the CONTRACTOR was required to submit with his/her bid a written drug testing policy for a public works project that is estimated to cost $150,000 or more. Among other things, the law sets forth specific requirements that must be in the plan for a program to test the employees of the CONTRACTOR and Subcontractors for drugs. The successful CONTRACTOR must comply with all provisions of the statute. This contract is subject to cancellation if CONTRACTOR fails to implement its testing program during the term of this contract, fails to provide information regarding this testing at the request of CITY; or provides false information to CITY regarding CONTRACTOR's employee drug testing program. CONTRACTOR shall sign an affidavit, attached as Attachment D, affirming that CONTRACTOR has and shall implement CONTRACTOR'S employee drug testing program throughout the term of this project.

IN WITNESS WHEREOF, the parties of this Agreement have hereunto set their hands.

DATE: _____

City of Bloomington

BY:

Kyla Cox Deckard, President

Elizabeth Karon, Vice President

James Roach, Secretary

Kerry Thompson, Mayor of Bloomington

BY:

Contractor Representative

Printed Name

Title of Contractor Representative

ATTACHMENT 'A'

"**SCOPE OF WORK**"

W 3RD ST MAINTENANCE PROJECT

This project shall include, but is not limited to, asphalt milling and resurfacing, curb replacement, and curb ramp replacement of W 3rd St between Franklin Rd and Patterson Dr.

ATTACHMENT 'B'

BIDDER'S AFFIDAVIT IN COMPLIANCE WITH INDIANA CODE 36-1-12-20 TRENCH SAFETY SYSTEMS; COST RECOVERY

STATE OF INDIANA)
) SS:
COUNTY OF _____)

AFFIDAVIT

The undersigned, being duly sworn, hereby affirms and says that:

1. The undersigned is the _____ of
(job title)
_____.
(company name)

2. The undersigned is duly authorized and has full authority to execute this Bidder's Affidavit.

3. The company named herein that employs the undersigned:
   i. has contracted with or seeking to contract with the City of Bloomington to provide services; **OR**
   ii. is a subcontractor on a contract to provide services to the City of Bloomington.

4. By submission of this Bid and subsequent execution of a Contract, the undersigned Bidder certifies that as successful Bidder (Contractor) all trench excavation done within his/her control (by his/her own forces or by his/her Subcontractors) shall be accomplished in strict adherence with OSHA trench safety standards contained in 29 C.F.R. 1926, Subpart P, including all subsequent revisions or updates to these standards as adopted by the United States Department of Labor.

5. The undersigned Bidder certifies that as successful Bidder (Contractor) he/she has obtained or will obtain identical certification from any proposed Subcontractors that will perform trench excavation prior to award of the subcontracts and that he/she will retain such certifications in a file for a period of not less than three (3) years following final acceptance.

6. The Bidder acknowledges that included in the various items listed in the Schedule of Bid Prices and in the Total Amount of Bid Prices are costs for complying with I.C. 36-1-12-20. The Bidder further identifies the costs to be summarized below*:

	Trench Safety Measure	Units of Measure	Unit Cost	Unit Quantity	Extended Cost
A.					
B.					
C.					
D.					
				Total	**$_____**

Method of Compliance (Specify) _____

_____

Date: _____, 20_____

_____
Signature

_____
Printed Name

STATE OF INDIANA)
) SS:
COUNTY OF _____)

Before me, a Notary Public in and for said County and State, personally appeared _____ and acknowledged the execution of the foregoing this _____ day of _____, 20_____.

My Commission Expires: _____ _____
Signature of Notary Public

County of Residence: _____ _____
Printed Name of Notary Public

Commission #:_____

*Bidders: Add extra sheet(s), if needed.

If Bidder fails to complete and execute this sworn affidavit, his/her Bid may be declared nonresponsive and rejected by the **CITY OF BLOOMINGTON**.

ATTACHMENT 'C'

"E-Verify AFFIDAVIT"

STATE OF INDIANA)

)SS:

COUNTY OF _____)

E-Verify AFFIDAVIT

The undersigned, being duly sworn, hereby affirms and says that:

1. The undersigned is the _____ of _____.
   a. (job title) (company name)
2. The company named herein that employs the undersigned:
   i. has contracted with or seeking to contract with the City of Bloomington to provide services; **OR**
   ii. is a subcontractor on a contract to provide services to the City of Bloomington.
3. The undersigned hereby states that, to the best of his/her knowledge and belief, the company named herein does not knowingly employ an "unauthorized alien," as defined at 8 United States Code 1324a(h)(3).
4. The undersigned herby states that, to the best of his/her belief, the company named herein is enrolled in and participates in the E-verify program.

_____

Signature

_____

Printed Name

STATE OF INDIANA)

)SS:

COUNTY OF _____)

Before me, a Notary Public in and for said County and State, personally appeared _____ and acknowledged the execution of the foregoing this _____ day of _____, 20_____.

My Commission Expires: _____ _____

Signature of Notary Public

County of Residence: _____ _____

Printed Name of Notary Public

My Commission #:_____

ATTACHMENT 'D'

COMPLIANCE AFFIDAVIT

REGARDING INDIANA CODE CHAPTER 4-13-18

DRUG TESTING OF EMPLOYEES OF PUBLIC WORKS CONTRACTORS

STATE OF INDIANA)
) SS:
COUNTY OF _____)

AFFIDAVIT

The undersigned, being duly sworn, hereby affirms and says that:

1. The undersigned is the _____ of
(job title)
_____.
(company name)

2. The undersigned is duly authorized and has full authority to execute this Affidavit.

3. The company named herein that employs the undersigned:
   iii. has contracted with or seeking to contract with the City of Bloomington to provide services; **OR**
   iv. is a subcontractor on a contract to provide services to the City of Bloomington.

4. The undersigned certifies that Contractor's submitted written plan for a drug testing program to test employees of the Contractor and Subcontractor for public works projects with an estimated cost of $150,000 is in accordance with Indiana Code 4-13-18 as amended.

5. The undersigned acknowledges that this Contract shall be subject to cancellation should Contractor fail to comply all provisions of the statute.

_____
Signature

_____
Printed Name

STATE OF INDIANA)
)SS:
COUNTY OF _____)

Before me, a Notary Public in and for said County and State, personally appeared _____ and acknowledged the execution of the foregoing this _____ day of _____, 20_____.

My Commission Expires: _____

_____
Signature of Notary Public

County of Residence: _____

_____
Printed Name of Notary Public

My Commission #:_____

ATTACHMENT 'E'

"Unit Prices"

Line Item	Item ID	Description	Quantity	Unit of Measure	Unit Cost	Total
1	105-06845	CONSTRUCTION ENGINEERING	1	L.S.	$5,000.00	$5,000.00
2	110-01001	MOBILIZATION AND DEMOBILIZATION	1	L.S.	$50,000.00	$50,000.00
3	201-52370	CLEARING RIGHT OF WAY	1	L.S.	$49,629.91	$49,629.91
4	202-02240	PAVEMENT REMOVAL	944	S.Y.	$27.00	$25,488.00
5	202-02278	CURB, CONCRETE, REMOVE	516	L.F.	$17.00	$8,772.00
6	202-02279	CURB AND GUTTER, REMOVE	133	L.F.	$17.00	$2,261.00
7	202-52710	SIDEWALK, CONCRETE, REMOVE	693	S.Y.	$37.00	$25,641.00
8	202-90277	DETECTOR HOUSING, REMOVE	5	EACH	$750.00	$3,750.00

9	201-90788	DEBRIS, REMOVE STRUCTURE NO.	3	EACH	$800.00	$2,400.00
10	205-06933	TEMPORARY INLET PROTECTION	70	EACH	$110.00	$7,700.00
11	301-12234	COMPACTED AGGREGATE NO. 53	97	C.Y.	$190.00	$18,430.00
12	306-08034	MILLING, ASPHALT, 1 1/2 IN	39,492	S.Y.	$2.20	$86,882.40
13	401-07321	QC/QA-HMA, 2, 64, SURFACE, 9.5 mm (Modified)	3,278	TON	$95.00	$311,410.00
14	401-07390	QC/QA-HMA, 2, 64, INTERMEDIATE, 19.0 mm (Modified)	116	TON	$165.00	$19,140.00
15	401-07407	QC/QA-HMA, 2, 64, BASE, 25.0 mm (Modified)	185	TON	$120.00	$22,200.00
16	401-10258	JOINT ADHESIVE, SURFACE	19,000	L.F.	$0.35	$6,650.00
17	402-07451	HMA WEDGE AND LEVEL, TYPE B	3	TON	$200.00	$600.00
18	406-05521	ASPHALT FOR TACK COAT	39,492	S.Y.	$0.25	$9,873.00

19	502-06329	PCCP, 12 IN.	17	S.Y.	$310.00	$5,270.00
20	502-06457	PCCP, 9IN.	67	S.Y.	$160.00	$10,720.00
21	604-06070	SIDEWALK, CONCRETE, 4IN	335	S.Y.	$110.00	$36,850.00
22	604-08086	CURB RAMP, CONCRETE	413	S.Y.	$220.00	$90,860.00
23	604-12083	DETECTABLE WARNING SURFACES	75	S.Y.	$280.00	$21,000.00
24	605-06120	CURB, CONCRETE	561	L.F.	$85.00	$47,685.00
25	605-06140	CURB AND GUTTER, CONCRETE	147	L.F.	$85.00	$12,495.00
26	611-08232	MAILBOX ASSEMBLY, RESET SINGLE	2	EACH	$300.00	$600.00
27	621-06561	MULCHED SEEDING, CITY OF BLOOMINGTON MIX	508	S.Y.	$8.00	$4,064.00
28	715-05149	PIPE, TYPE 2, CIRCULAR, 12 IN.	36	L.F.	$130.00	$4,680.00
29	720-01894	CASTING, FURNISH AND ADJUST TO GRADE	2	EACH	$1,700.00	$3,400.00

30	720-12797	CASTING, INLET, ADJUST TO GRADE	6	EACH	$1,100.00	$6,600.00
31	720-98174	INLET, B15	2	EACH	$5,000.00	$10,000.00
32	801-06775	MAINTAINING TRAFFIC (RR FLAGGER REQUIRED)	1	L.S.	$60,000.00	$60,000.00
33	808-75340	PAVEMENT MESSAGE MARKING, THERMOPLASTIC RXR R X R	2	EACH	$495.00	$990.00
34	808-02978	PAVEMENT MESSAGE MARKING, THERMOPLASTIC, BICYCLE LANE MARKING	23	EACH	$495.00	$11,385.00
35	808-03439	TRANSVERSE MARKING, THERMOPLASTIC, CROSSWALK LINE, WHITE, 24 IN.	1,911	L.F.	$5.95	$11,370.45
36	808-06701	LINE, THERMOPLASTIC, BROKEN, WHITE, 4 IN.	2,484	L.F.	$1.15	$2,856.60

37	808-06703	LINE, THERMOPLASTIC, SOLID, WHITE, 4 IN.	11,665	L.F.	$0.98	$11,431.70
38	808-11482	LINE, THERMOPLASTIC, DOTTED, WHITE, 4 IN.	828	L.F.	$2.95	$2,442.60
39	808-11493	LINE, THERMOPLASTIC, DOTTED, YELLOW, 4 IN.	33	L.F.	$2.95	$97.35
40	808-75043	LINE, THERMOPLASTIC, SOLID, WHITE, 6 IN.	2,200	L.F.	$1.95	$4,290.00
41	808-75240	LINE, THERMOPLASTIC, BROKEN, YELLOW, 4	208	L.F.	$1.15	$239.20
42	808-75260	TRANSVERSE MARKING, THERMOPLASTIC, CROSSHATCH LINE, WHITE, 12 IN.	315	L.F.	$3.95	$1,244.25

43	808-75278	TRANSVERSE MARKING, THERMOPLASTIC, CROSSHATCH LINE, YELLOW, 12 IN.	61	L.F.	$3.95	$240.95
44	808-75245	LINE, THERMOPLASTIC, SOLID, YELLOW, 4 IN.	3,761	L.F.	$0.98	$3,685.78
45	808-75297	TRANSVERSE MARKING, THERMOPLASTIC, STOP LINE, 24 IN.	776	L.F.	$5.95	$4,617.20
46	808-75300	TRANSVERSE MARKING, THERMOPLASTIC, CROSSWALK LINE, WHITE, 6 IN.	662	L.F.	$1.95	$1,290.90
47	808-75320	PAVEMENT MESSAGE MARKING, THERMOPLASTIC LANE INDICATION ARROW	39	EACH	$125.00	$4,875.00
48	808-75998	SNOWPLOWABLE RAISED PAVEMENT MARKER	215	EACH	$29.95	$6,439.25
49	808-95933	CURB, PAINTING, YELLOW	1,257	L.F.	$0.98	$1,231.86

50	808-96075	LINE, THERMOPLASTIC, BROKEN, WHITE, 6 IN.	392	L.F.	$1.95	$764.40
51	805-78470	SIGNAL CABLE, ROADWAY LOOP, COPPER, 1C/14 GAUGE	4,062	L.F.	$1.10	$4,468.20
52	805-78795	SAW CUT FOR ROADWAY LOOP DETECTOR AND SEALANT	1,349	L.F.	$12.00	$16,188.00
TOTAL						$1,060,200.00

REGULAR MEETING OF THE BOARD OF PUBLIC WORKS

The Board of Public Works meeting was held Tuesday, July 2, 2024 at 5:30 pm in the Council Chambers of City Hall at 401 N. Morton St., Bloomington, Indiana and virtually through Zoom with Kyla Cox Deckard presiding.

ROLL CALL

Present: Kyla Cox Deckard – In Person
Elizabeth Karon – In Person
James Roach – In Person

City Staff: Adam Wason – Public Works
April Rosenberger – Public Works
Chelsea Gregory – Public Works
Enedina Kassamanian – Legal
Larry Allen – Legal
John Hewitt – HAND
Jo Stong – HAND
Roy Aten – Engineering
Jason Kerr – Engineering
Alex Gray – Engineering

MESSAGES FROM BOARD MEMBERS

All of the Board members thanked the Street Division Crews after the massive storms last week and the all their efforts in the clean up after the storm. Roach asked Wason to give some more details about the brush cleanup for residents. Wason stated that there is a plan in place for cleanup of private brush and will discuss it during the staff report.

APPEALS
Appeal Notice of Violation 620424-05-2516; 530 S. Washington

Enedina Kassamanian, Legal, presented Appeal Notice of Violation 620424-05-2516; 530 S. Washington. See meeting packets for details.

Public Comments: Joseph Davis asked that the hearing be continued because he hasn't been able send his full evidence for the public and Board to review. Mr. Davis requested a number to text. He stated that some of his items weren't included in the Board packet. He said in the report it states his grass is over eight inches and that he has poison ivy. He said both things are not correct and his documentation proves that. He states that his civil rights are being denied. He requested that the Board act on the motion.

Wason asked Legal if it's proper that the appellant can't make a motion to the Board. Larry Allen stated correct. Wason asked that Legal and HAND present whether or not they would like this appeal upheld or denied. Kassamanian on the behalf of Legal asked that this appeal be denied.

Board Comments: Roach asked Legal if the term compliance never occurred in their presentation does it mean that the property is still out of compliance. Kassamanian stated that the property is still out of compliance the last time they saw it. Roach asked Legal to confirm the date of the first initial violation. Davis interrupted and started speaking. Wason asked Mr. Davis to please step away from the podium when the board is asking questions of City Legal. Kassamanian stated it was April 26, 2024. Roach stated is was July 2, 2024. Karon asked HAND when the photos in the packet were taken. Hewitt said that photos were taken at the same time as the notice of violation. The original warning was April 26, 2024. Cox Deckard asked if anyone has checked on the property's compliance as of yesterday. Hewitt said he isn't aware that they have checked on the property yesterday or today. Karon asked when the May 10, 2024 ticket was given with the $50 fine, was the yard in compliance. Hewitt said it wasn't in compliance. Wason clarified there was a warning issued, notice of violation issued and there was a second notice of violation issued with a fine. Wason explained that the appeal is of the fine itself it is not whether or not the property is in compliance today, but was the property out of compliance at the time of the

notice of violation. Roach asked Hewitt if he was on the property on May 3, 2024. Hewitt stated he was not, but the compliance officer who was isn't available for this meeting. Wason asked Hewitt if he reviews the work of compliance officers or does he coordinate with the compliance officers. Hewitt reviewed the photographs and felt like it was out of compliance. Cox Deckard made mention that there are several photos in the packet that show different types of vegetation. A lot of them would be allowed to be over eight inches in height, but there are a few images that show grass that is overgrown. Hewitt stated that the UDO provides lists of permissible and not permissible plants. Karon asked Legal if the emails between Mr. Davis and Legal are typically included or excluded from the packet that they receive before the meeting. Allen said ordinarily those aren't things that are included in the packet, especially because this a point and time appeal. Roach stated a section of the code mentions some other states and federal documents that spell out certain types of plants. He asked if any of those documents mention poison ivy. Hewitt stated to his knowledge they do. Karon addressed Mr. Davis and stated that she is disappointed that he chose to approach the Board with disrespect. There was also to be a letter included with the Board packet that was sent in an updated packet that was submitted by the appropriate time. She was uncomfortable that this wasn't included in the original packet. She asked staff if it was an over sight. Wason stated there were several reasons. Staff were overwhelmed due to the storm and staff asked Mr. Davis to use Allen as a point of contact. Mr. Allen stated it was an oversight especially since various emails weren't being sent to him but the public works email. They rely on a forwarding system. It was submitted on time but not with the original packet.

Public Comment: Davis addressed the Board. He said he wants to rebut all the comments that were made. Cox Deckard said the time for the appeal is concluded. Davis said this is a violation of his rights. Cox Deckard told Davis she would give him one minute. Davis stated federal regulation has no jurisdiction that's listed in the City of Bloomington. It only states federal properties that have invasive plants, not for private properties. The UDO is only about new development. He says there is no time stamp on any of the images.

Karon made a motion to deny Appeal Notice of Violation 620424-05-2516; 530 S. Washington. Roach seconded. Cox Deckard took a roll call vote, Karon abstained, and two in favor, motion is passed.

TITLE VI ABATEMENTS
Abatement Request at 710 N. Lincoln, Units A & B

Jo Stong, HAND, presented Abatement Request at 710 N. Lincoln, Units A & B. See meeting packet for details.

Board Comments: Karon asked what communication has been made with the property owner. Stong said there has been no communication with the owner but with the property management, Parker Management. They sent a lease within seven days for the fines, then it's the responsibility of the tenant to pay the fine.

Public Comments: Davis said he doesn't trust the information coming from HAND. City Legal keeps information that people need to defend themselves. The property owner no doubt has not been notified properly. Davis argued to say immediate that compliance is required, that is illegal. There has to be a period for compliance. A beginning and end date.

Karon made a motion to approve the Abatement Request at 710 N. Lincoln, Units A & B. Roach seconded. Cox Deckard took a roll call vote, all in favor, motion is passed.

Public Comment: Jayme Shoal, business owner had some concerns. She presented a few plants to be shown and stated she sells these plants at the Farmer's Market. But these same plants were cited and needed to be mowed. These plants are not meant to be mowed. She mentioned the municipal code isn't in alignment with sustainable goals.

PETITIONS AND REMONSTRANCES

Joe Davis stated he was concerned about the request for abatement that was just granted. He said not even two weeks ago there was a request for Abatement at the Arby's property at 535 S Walnut St. He stated HAND did not notify them fairly or duly for the request for violation. Davis said the property is in compliance because he cleans up all the trash and other items that are left around the property.

CONSENT AGENDA

1. Resolution 2024-037; Lotus Fest
2. Resolution 2024-040; Witch Fest
3. Approval of Payroll

Karon made a motion to approve the Consent Agenda. Roach seconded. Cox Deckard took a roll call vote, all in favor, motion is passed.

NEW BUSINESS

Noise Permit Application from City of Bloomington Utilities for Night-time Construction Work

Adam Wason, Public Works, on the behalf of James Hall from utilities, presented Noise Permit Application from City of Bloomington Utilities for Night-time Construction Work. See meeting packet for details.

Board Comments: None

Karon made a motion to approve Noise Permit Application from City of Bloomington Utilities for Night-time Construction Work. Roach seconded. Cox Deckard took a roll call vote, all in favor, motion is passed.

Change Order Package #3 for the Hopewell East Project

Roy Aten, Engineering, presented Change Order Package #3 for the Hopewell East Project. See meeting packet for details.

Board Comments: None

Karon made a motion to approve Change Order Package #3 for the Hopewell East Project. Roach seconded. Cox Deckard took a roll call vote, all in favor, motion is passed.

Change Order #4 for Adams St. Sidewalk Project

Jason Kerr, Engineering, presented Change Order #4 for Adams St. Sidewalk Project. See meeting packet for details.

Board Comments: None

Karon made a motion to approve Change Order #4 for Adams St Sidewalk Project. Roach seconded. Cox Deckard took a roll call vote, all in favor, motion is passed.

Balancing Change Order for Adams St. Sidewalk Project

Jason Kerr, Engineering, presented Balancing Change Order for Adams St. Sidewalk Project. See meeting packet for details.

Board Comments: None

Karon made a motion to approve Balancing Change Order for Adams St. Sidewalk Project. Roach seconded. Cox Deckard took a roll call vote, all in favor, motion is passed.

Lane and Sidewalk Closure Request from Lineal Contracting (July 03, 2024 - July 24, 2024)

Alex Gray, Engineering, presented Lane and Sidewalk Closure Request from Lineal Contracting (July 03, 2024 - July 24, 2024). See meeting packet for details.

Board Comments: None

Karon made a motion to approve Lane and Sidewalk Closure Request from Lineal Contracting (July 03, 2024 - July 24, 2024). Roach seconded. Cox Deckard took a roll call vote, all in favor, motion is passed.

Alex Gray, Engineering, presented Street and Sidewalk Closure Extension Request from AEG. See meeting packet for details.

Street and Sidewalk Closure Extension Request from AEG

Board Comments: Karon asked if it's proper to change this title to Lane and Side Walk Closure, instead of Street and Sidewalk Closure without changing the resolution. Wason said it should be voted on as Lane and Sidewalk Closure.

Karon made a motion to approve Lane and Sidewalk Closure Extension Request from AEG. Roach seconded. Cox Deckard took a roll call vote, all in favor, motion is passed.

Alex Gray, Engineering, presented Road, Lane, Alley and Sidewalk Closure Request from Reed & Sons at 300 E. 4th Street. See meeting packet for details.

Road, Lane, Alley and Sidewalk Closure Request from Reed & Sons at 300 E. 4th Street

Board Comments: Roach mentioned that it was talked in the work session about summer festivals. Roach asked Gray if any festivals were going during that time on 4th Street. Gray said there is nothing in special events that will conflict. Cox Deckard added that during the work session the neighboring restaurant, Taste of India, would be able to have access during that time for parking. Gray said the alley will be open on that side.

Karon made a motion to approve Road, Lane, Alley and Sidewalk Closure Request from Reed & Sons at 300 E. 4th Street. Roach seconded. Cox Deckard took a roll call vote, all in favor, motion is passed.

STAFF REPORTS & OTHER BUSINESS

Wason thanked the Board for their initial messages about staff. Wanted to thank the hard working staff and members of the public during this time working together for the clean up after the storm. Monroe County Emergency Management and Indiana Department of Homeland Security met and discussed different avenues for disaster declaration, Wason said the city is waiting to see if the storm damage will rise to a full FEMA disaster response or if we will rely on State Disaster relief funds. The estimate for FEMA funds is between $14,000,000 and $15,000,000. Once we take everything into account, including nonprofit electric utilities, he believes the City will reach this number. The State thinks it might be hard to get to that amount. Staff are working hard to track all costs including the continued response. Through the procurement policy we have contracted with Williams Tree to pick up debris on private property and cleanup efforts. Staff are tracking data through UReports. Wason urged home owners who have any kind of damage to report it to the State's 211 system. It allows the State to calculate the claims into a system if the amount of property damage can be offered to owners. The city is opening a vegetation drop off site from storm damage. It will be located on Lower Cascades by the ball fields. The city has contracted with Bluestone Tree Service for tub grinding, which helps us to get tree debris into smaller, more manageable piles. Staff will be using the UReport system to track areas that debris needs to be picked up but also prioritizing where to begin based on the higher volume of hot spots.

Board Comments: Roach asked if property owners who call 211 need the estimate, value or cost for damage. Wason said that right now they just need to be registered in the 211 system and then they will follow up with how to submit claims. Karon asked what kind of things the 211 system is collecting. For example, things that were lost because of the power outage like food or just tree damage. Wason said it's more for things like property damage, but the Trustee's office or United Way have resource pages explaining how a resident with SNAP benefits can seek reimbursement for food loss. Karon asked if a resident doesn't submit a UReport for debris pick up, but there is debris pick up in their neighbor's yard, would their debris be picked up as well? Wason said yes they would be picked up as long as they are in manageable piles. Karon asked if branches and debris had to be put in garbage bags or plastic tubs. Wason said if you want to use the contracted service then nothing is to be bagged. If you want it picked up through sanitation then yes having it bagged up is needed.

APPROVAL OF CLAIMS

Karon made a motion to approve claims in the amount of $1,178,022.98. Roach seconded. Cox Deckard took a roll call vote, all in favor, motion is passed.

ADJOURNMENT

Cox Deckard called for adjournment at 6:49 p.m.

Accepted By:

_____
Kyla Cox Deckard, President

_____
Elizabeth Karon, Vice President

_____
James Roach, Secretary

Date: Attest to:

REGULAR MEETING OF THE BOARD OF PUBLIC WORKS

The Board of Public Works meeting was held Tuesday, July 16, 2024 at 5:30 pm in the Council Chambers of City Hall at 401 N. Morton St., Bloomington, Indiana and virtually through Zoom with Kyla Cox Deckard presiding.

ROLL CALL

Present: Elizabeth Karon – In Person
James Roach – In Person

City Staff: Adam Wason – Public Works
Enedina Kassamanian – Legal
Aleksandrina Pratt – Legal
John Hewitt – HAND
Zac Rogers – Engineering
Dashiell Schonemann- Poppeliers – Engineering
Jason Kerr – Engineering

MESSAGES FROM BOARD MEMBERS

None

APPEALS

Appeal Notice of Violation #62024-05-2495; 706 W. 15th Street

Enedina Kassamanian, Legal, presented Appeal Notice of Violation #62024-05-2495; 706 W. 15th Street. See meeting packets for details.

Board Comments: Roach stated the letter in the packet from the owner said that they mowed after they received the warning. He asked if the compliance officer stated that the yard was mowed but not all parts. Kassamanian stated that was correct but it was just partial compliance. Karon asked if there was a date on the photos. Kassamanian stated there were photos taken by officer Davis and the iPad tool that is used is time stamped. Photos were taken on May 16, 2024, a few days after the warning. Karon said that in the homeowner's letter it mentions there has been an excessive amount of rain and how quickly the grass has grown. Karon asked John Hewett if people were struggling more to be compliant because of this or is this normal for the time of the year. Hewett said this is pretty normal for the time of the year, he drove by the property before the work session and it's still out of compliance.

Roach made a motion to deny Appeal Notice of Violation #62024-05-2495; 706 W. 15th Street. Karon seconded. Karon took a roll call vote, all in favor, motion is passed.

PETITIONS AND REMONSTRANCES

None

CONSENT AGENDA

1. Approval of Minutes; June 18, 2024
2. Resolution 2024-041; Banneker Block Party
3. Amendment #2 to CrossRoad Engineers, PC for Preliminary Engineering Services for the Hopewell West Project
4. Addendum #1 to 2024 Precision Concrete, Inc. Contract
5. Approval of Payroll

Roach made a motion to approve the Consent Agenda. Karon seconded. Karon took a roll call vote, all in favor, motion is passed.

NEW BUSINESS

Resolution 2024-042; Written Approval of Payments Pre-Approved by Controller for Special Purchase

Aleksandrina Pratt, Legal, presented Resolution 2024-042; Written Approval of Payments Pre-Approved by Controller for Special Purchase. See meeting packet for details.

Board Comments: None

Roach made a motion to approve Resolution 2024-042; Written Approval of Payments Pre-Approved by Controller for Special Purchase. Karon seconded. Karon took a roll call vote, all in favor, motion is passed.

Adam Wason, Public Works, presented Resolution 2024-043; Approval of Special Purchase under Emergency Conditions for Storm Clean-Up. See meeting packet for details.

Resolution 2024-043; Approval of Special Purchase under Emergency Conditions for Storm Clean-Up

Board Comments: None

Roach made a motion to approve Resolution 2024-043; Approval of Special Purchase under Emergency Conditions for Storm Clean-Up. Karon seconded. Karon took a roll call vote, all in favor, motion is passed.

Adam Wason, Public Works, presented Street Sweeping Memorandum of Understanding between City of Bloomington Utilities and Public Works. See meeting packet for details.

Street Sweeping Memorandum of Understanding between City of Bloomington Utilities and Public Works

Board Comments: Roach asked if there would be any staffing implications with CBU. Will they be hiring new people or shifting? Wason said they will be shifting forward with another MOU. Karon asked if there was an update on the discussion and vote from yesterday's Utility Service Board meeting. Wason said he didn't hear anything to the contrary so he assumes it did get passed last night.

Roach made a motion to approve Street Sweeping Memorandum of Understanding between City of Bloomington Utilities and Public Works. Karon seconded. Karon took a roll call vote, all in favor, motion is passed.

Zac Rogers, Engineering, presented Balancing Change Order for Change Order #1 for Moores Pike Trail SE Park Improvements. See meeting packet for details.

Change Order #1 for Moores Pike Trail SE Park Improvements

Board Comments: None

Roach made a motion to approve Balancing Change Order for Change Order #1 for Moores Pike Trail SE Park Improvements. Karon seconded. Karon took a roll call vote, all in favor, motion is passed.

Dashiell Schonemann - Poppeliers, Engineering, presented Sidewalk and Lane Closure Request from Service Solutions of Bloomington on N. College Ave**.** See meeting packet for details.

Sidewalk and Lane Closure Request from Service Solutions of Bloomington on N. College Ave.

Board Comments: None

Roach made a motion to approve presented Sidewalk and Lane Closure Request from Service Solutions of Bloomington on N. College Ave**.** Karon seconded. Karon took a roll call vote, all in favor, motion is passed.

Jason Kerr, Engineering, presented Contract E&B Paving for W. 3rd St. from Franklin Rd. to Patterson Dr. Project. See meeting packet for details.

Contract E&B Paving for W. 3rd St. from Franklin Rd. to Patterson Dr. Project

Board Comments: Roach asked since opening the bids, have they received the missing document. Kerr stated yes, everything is whole. Roach also asked if they were to make a motion do they need to have specific language about that minor change. Kerr stated no. Karon asked if the temporary lane closures during the construction come to the Board separately. Kerr explained that we announce the awarding of the bid, then the MOT will be set up. Karon asked if they approved their MOT. Kerr said they are working on getting that for approval. That they can always come back with an update during a staff report.

Roach made a motion to approve the presented Contract E&B Paving for W. 3rd St. from Franklin Rd. to Patterson Dr. Project. Karon seconded. Karon took a roll call vote, all in favor, motion is passed.

STAFF REPORTS & OTHER BUSINESS

Adam Wason, Public Works, updated the Board about the debris clean up. Williams Tree Company has been working heavily through the southwest to southeast where the storm had the biggest impact. We will continue through this week and next week. We are working through the UReports, crews will work overtime on the weekend. We initially had on the agenda, Appeal for Title 12, Right-Of-Way violation with AEG. We are having continued conversations about that notice of violation and the appeal. They are providing some additional information on some of the violations that were identified in the violation. They have some disputes. They have a great leadership team that is very responsive and we will give you some updates soon. He thanked all the hardworking staff especially during all this cleanup of debris.

Board Comments: Karon asked how the response has been to the drop off location. Wason stated about a couple dozen residents have taken advantage of that.

APPROVAL OF CLAIMS

Roach made a motion to approve claims in the amount of $1,695,023.94. Karon seconded. Karon took a roll call vote, all in favor, motion is passed.

ADJOURNMENT

Karon called for adjournment at 6:00 p.m.

Accepted By:

_____
Elizabeth Karon, Vice President

_____
James Roach, Secretary

Date: Attest to:

Board of Public Works
Staff Report

Project/Event:	Duke Energy Boring Work
Staff Representative:	Kyle Baugh
Petitioner/Representative:	Ryan Sizemore
Date:	July 30th, 2024

Report: Duke Energy is requesting lane and bike lane shifts for the east bound lanes and a sidewalk closure on the south side of W 11th St between N Morton and N Madison as part of the project adjacent to 648 N Madison (the Kiln). This request is fo boring and sidewalk panel replacement work. The traffic control would be in place for three days in August with definitive dates to be decided at a later date.

Duke Energy has supplied maintenance of traffic plans for all work.

1100 W 2nd St
Bloomington, IN 47403
o: 812.337.3039

Jul. 26, 2024

Board of Public Works
City of Bloomington
401 N. Morton St Suite 120
Bloomington, IN 47404

Subject: N Madison St requested lane restriction and sidewalk closure

Dear Board Members:

Duke Energy will be installing the new electrical service for The Kiln Building at 648 N Madison Street. As part of that process, work will need to be conducted on the south side of W 11th Street between N Madison St and N Morton St.

Duke Energy requests the temporary closure of the east bound lane of W 11th St, closure of the east bound bike lane, and the closure of the sidewalk along the south side of W 11th St between N Madison St and N Morton St during a three-day period between August 27th, 2024 and September 10th, 2024.

The east bond car and bike lanes will need to be closed intermittently during this time period as work is conducted on the site. The sidewalk will need to be closed for the full duration due to the removal and restoration of part of the sidewalk.

Duke Energy and its contractors will utilize signage, barricades, and traffic control personal, as required, to insure the safe flow of vehicular and pedestrian traffic.

Sincerely,

Ryan Sizemore
Engineering Design Associate

Figure 6H-28. Sidewalk Detour or Diversion (TA-28)

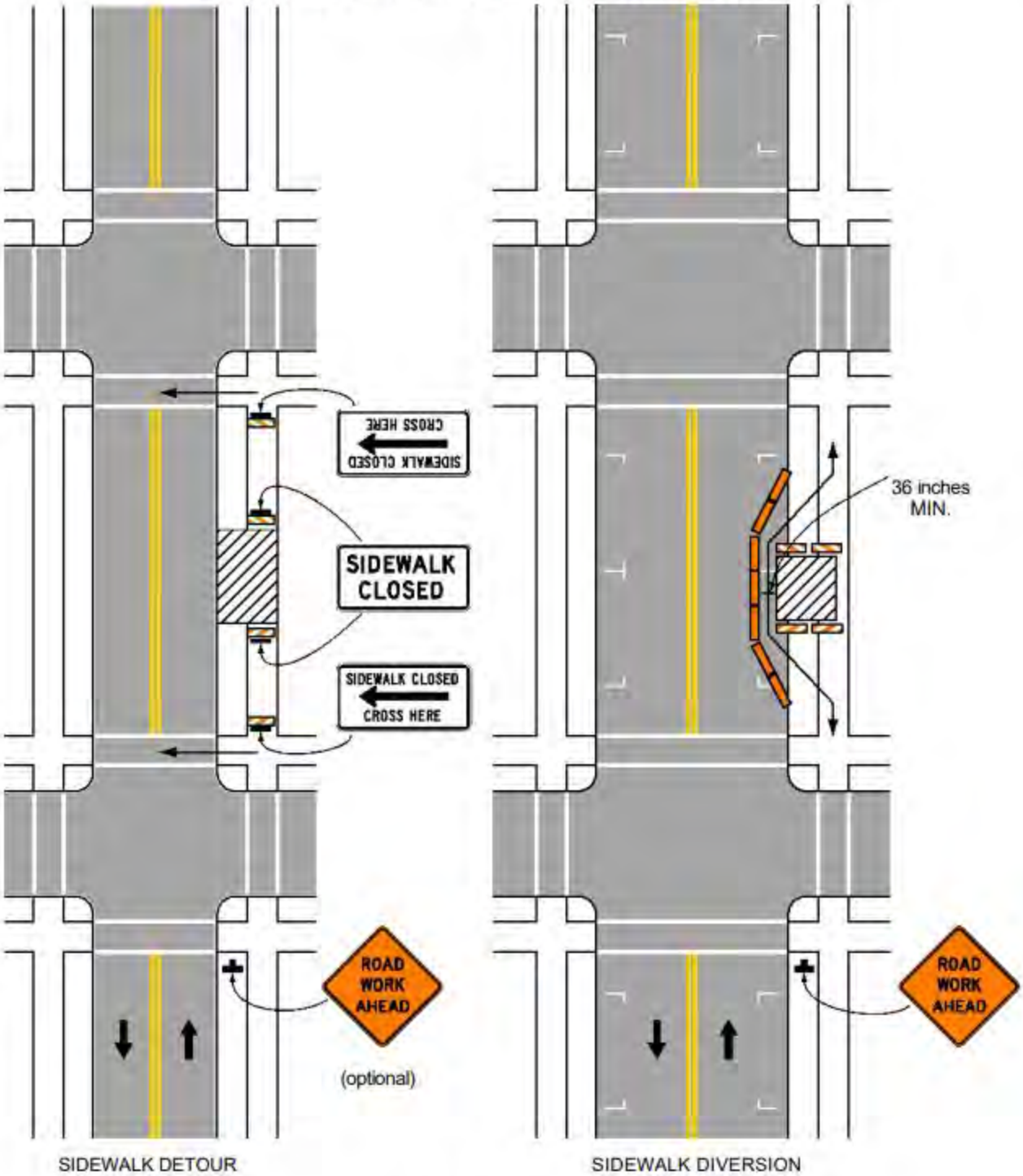

Typical Application 28

SAFETYFirst
- PERSONAL ACCOUNTABILITY
- ACTIVE CARING
- HAZARD RECOGNITION

USP: Breaker at substation BLOOMINGTON DUNN ST (441) 1222
USP:
USP:
USP:
USP:

CIRCLE FOR SAFETY — DUKE ENERGY.

Safety Reminders / Adverse Conditions

?:
?:
?:
?:

Replace 1/0 primary riser, install SMOD. Extend 1/0 3PH cable to new 3PH padmount transformer.

REMEMBER: Work zone area conditions may have changed for this job! Everyone is responsible for verifying the above safety information is correct prior to any work being performed each day.

N

SWITCH FEEDS ON MNI-5734, CAN BE FED FROM MNI-5733

S1 - DIG AT BASE OF POLE
INSTALL 4" CONDUIT FOR EXISTING 1/0 RISER
PULL EXISTING RISER CABLE INTO CONDUIT
INSTALL 4" CONDUIT FOR NEW RISER FEED TO SMOD
I-UG-PRIMARY-1/0 AL 15kV-15FT-ABC
CONCRETE SIDEWALK RESTORATION

P2 - POLE MNI-5439
REPLACE 1/0 AL 3PH HV RISER 21.03-100
FUSE-125-STANDARD-ABC
EASTBOUND LANE, BIKE LANE, SIDEWALK CLOSURE

W 11TH ST

1ABC FROM MNI-5439
2ABC TO MNI-5734
3ABC TO MNI-17350

P3 - SMOD MNI-17811
I-PAD-MNI17811
I-CABINET-15 kV-3P SMOD/4WAY
I-ELBOW-LB-NORM CCC-ABC
I-ELBOW-LB-NORM CCC-ABC
I-ELBOW-LB-NORM CCC-ABC
PULL 1/0 RISER INTO SMOD

1ABC

S2 - 4" CONDUIT
BORE ALLEY ~60 FEET, MEET CUSTOMER CONDUIT
I-UG-PRIMARY-1/0 AL 15kV-70FT-ABC

P1 - Pad MNI-17350
E-PAD-MNI17350
I-UG-TX-300 kVA-120/208 V--ABC
I-ELBOW-LB-NORM CCC-ABC

N MORTON ST

Work Order Number	53111198
Customer/Contact	Eurton Properties LLC
Contact Phone	812-322-7303
Job Site Address	648 N Madison St
City	BLOOMINGTON
County	MONROE
State, Zip	IN, 47404
Designer	Cameron West
Designer Phone	812-340-8107
Circuit ID	N5604411222
Primary Voltage	12.47/7.2 kV
Permit Required	Yes X No
Permit Type/No.	City of Bloomington
Permit Type/No. 2	
Permit Type/No. 3	Bloomington Township
Revision Date	

DUKE ENERGY.

Sheet
Scale = 1"=50'

Figure 6P-10. Lane Closure on a Two-Lane Road Using Flaggers (TA-10)

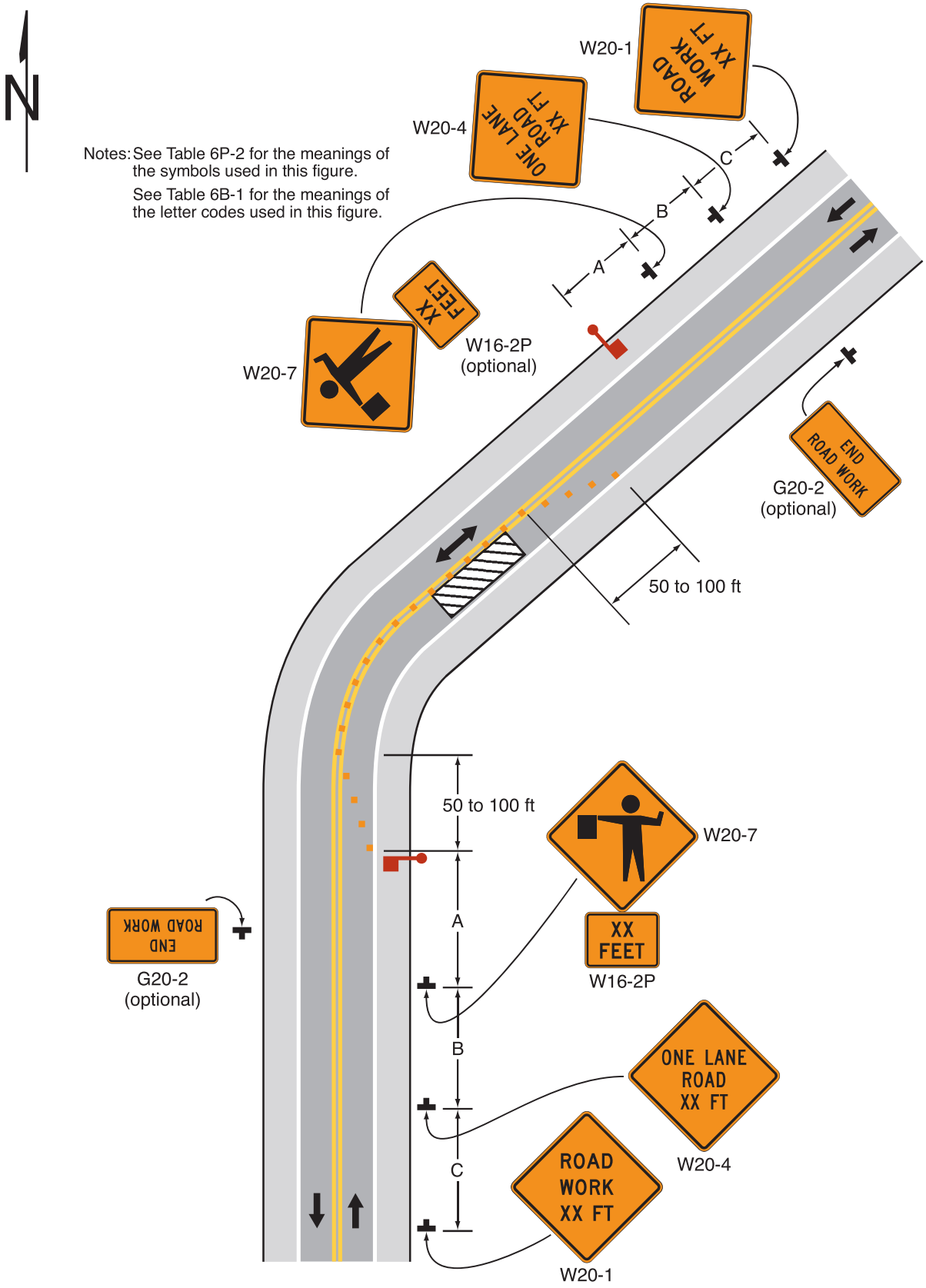

Typical Application 10

Board of Public Works
Staff Report

Project/Event:	Fox Properties Façade Project
Staff Representative:	Kyle Baugh
Petitioner/Representative:	Justin Fox
Date:	July 3oth, 2024

Report:
Fox properties is requesting a six week extension of the previously permitted request**.**

The request includes an alley closure in the north/south alley between S College and S Walnut and metered parking reservation on the south side of W 4th St to accommodate a pedestrian walk around for the south sidewalk of W 4th St for work at 111 W 4th St.

This is a restoration project that will replace the façade of the building. The alley closure would be used for construction dumpster placement in the northern end of the alley where it meets w 4th St. The pedestrian walk around is planned to start mid-block with a temporary ramp being placed at the curb and end at the start of the alley. The temporary traffic control would continue to be in place until September 20th , 2024.

City of Bloomington
Public Works Department

STAFF REPORT for Sidewalk Closure Request from Dishman Construction Adjacent to 1115 N. College Ave will be available for the 07/30/2024 Board of Public Works Meeting

401 N. Morton Street • Bloomington, IN 47404 City Hall Phone: (812) 349-3410 • Fax: (812) 349-3520
www.bloomington.in.gov
e-mail: public.works@bloomington.in.gov

KERRY DISHMAN
3645 Popcorn Church Rd.
Springville, IN 47462
Cell: 812.345.4012
Fax: 888.554.0271
kdishman67@gmail.com
kerry@dishmanenterprise.com

Dishman
CONSTRUCTION , L.L.C.

July 15, 2024

Via Electronic Delivery

Board of Public Works
City of Bloomington
401 North Morton Street
Bloomington, IN 47404

Re: 1115-1117 College Ave. Parking space restrictions and sidewalk closure

Dear Board Members:

My company, Dishman Construction LLC, was contracted to remove and replace sidewalks at 1115/1117 N College Avenue. Approximately ½ years ago someone fell on the sidewalk at this location. The City of Bloomington sent out letters for replacement. Due to length of sidewalk area and pouring next to retaining walls this is a 2–3-day affair.

We will cooperate and coordinate with the street department on safety and all aspects of the work described. Therefore, Dishman Construction LLC requests that the Board of Public Works approves the restrictions closure mentioned above from July 30, 2024 through July 31, 2024.

Thank you
And Best Regards:

Kerry Dishman

CITY OF BLOOMINGTON
RIGHT-OF-WAY USE PERMIT APPLICATION

☐ ROW EXCAVATION ☐ ROW USE

ADDRESS OF ROW ACTIVITY: _____

401 N Morton Street, Suite 150
P.O. Box 100
Bloomington, IN 47402

Phone: (812) 349-3913
Fax: (812) 349-3520
Email:
engineering@bloomington.in.gov

A. APPLICANT/AGENT INFORMATION:

APPLICANT NAME: DISHMAN Construction Kerry Dishman
E-MAIL: Kdishman670gmail.com
COMPANY: D ishman Construction
ADDRESS: 3645 popcorn Church Rd
CITY, STATE, ZIP: Springville In 47462
24-HR EMERGENCY CONTACT NAME: Kerry
24-HR CONTACT PHONE #: 812 345 4012
INSURANCE #*: on File COMPANY: _____
BOND#*: on File COMPANY: _____
* INSURANCE & BOND MUST BE ON FILE WITH THE CITY BEFORE PERMIT WILL BE ISSUED

****SUBCONTRACTOR INFORMATION****

(LIST ALL COMPANIES WORKING UNDER PRIMARY CONTRACTOR PERMIT)

COMPANY NAME: Workman Construction

B. WORK DESCRIPTION:

☐ POD/DUMPSTER ☐ CRANE ☐ SCAFFOLDING ☐ CONSTRUCTION USE*

(EXPLAIN):

*EXCAVATION, LONG TERM USE FOR STORAGE OF MATERIAL/EQUIPMENT/WALKAROUND

C. RIGHT OF WAY TO BE USED/CLOSED:

STREET NAME 1: 1115 - 1117 N College
1ST INTERSECTING STREET NAME: 16th Street
2ND INTERSECTING STREET NAME: 17th Steet

☐ ROAD CLOSURE ☐ LANE CLOSURE 1 ☐ 2 ☐ 3 ☐

☐ SIDEWALK* ☐ BIKE LANE ☒ OTHER

TRANSIT STOP? ☐ Y ☐ N PARKING LANE(S)** ☐ Y ☐ N **NON-METERED

START DATE July 29 END DATE: July 31 # OF DAYS* 2024

Sidewalk Replacement Set Dumpster IN Park Lane

STREET NAME 2: _____
1ST INTERSECTING STREET NAME: _____
2ND INTERSECTING STREET NAME: _____

☐ ROAD CLOSURE ☐ LANE CLOSURE 1 ☐ 2 ☐ 3 ☐

☐ SIDEWALK* ☐ BIKE LANE ☐ OTHER

TRANSIT STOP? ☐ Y ☐ N PARKING LANE(S)** ☐ Y ☐ N **NON-METERED

START DATE: _____ END DATE: _____ # OF DAYS*: _____

*SIDEWALK CLOSURES FOR A PERIOD OR PERIODS TOTALING 24HRS OR MORE SHALL INSTALL A WALKAROUND UNLESS OTHERWISE APPROVED DURING REVIEW

STANDARD CLOSURE HOURS MON-FRI*: 9:00 AM - 3:00 PM & 6:00 PM - 9:00 PM

STANDARD CLOSURE HOURS ☐ *NON-STANDARD CLOSURE HOURS ☐

REQUESTED CLOSURE HOURS: 8 AM - 4 PM

*non-standard hours may not be allowed near schools, on arterials, or other circumstances and are subject to approval during the permitting process

BMC 14.09.040 allows work from 6 AM to 10 PM without violating the noise ordinance (7AM to 9PM for pneumatic hammers)

D. TRAFFIC CONTROL DEVICES*:

☒ CONES	☐ ARROWBOARD
☐ LIGHTED BARRELS	☐ TYPE 3 BARRICADES
☐ FLAGGERS	☐ BPD OFFICER

*PROVIDING MUTCD COMPLIANT TEMPORARY TRAFFIC CONTROL DEVICES AND MAINTENANCE OF TRAFFIC (MOT)PLAN IS YOUR RESPONSIBILITY AND REQUIRED

See page 3 for additional MOT resources; the graph paper can be used for your MOT site plan if needed or you can submit a separate sheet

E. METERED PARKING SPACES NEEDED: ☐ Y ☒ N

IT IS THE RESPONSIBILITY OF THE APPLICANT TO RESERVE PARKING METER(S) APPLICATION LOCATED: https://bloomington.in.gov/transportation/parking/moving OR CONTACT PARKING SERVICES WITH QUESTIONS AT (812)349-3436

F. IS THIS A ☐ CBU* ☐ COUNTY* ☐ IU* ☐ NP* PROJECT?

PROJECT NAME: _____
PROJECT #: _____
PROJECT MGR.: _____
PROJECT MGR. #: _____

*CBU = CITY OF BLOOMINGTON UTILITIES *COUNTY = MONROE COUNTY
*IU= INDIANA UNIVERSITY *NP= NOT-FOR-PROFIT AGENCY

G. EXCAVATIONS:

SQ FT OF PAVEMENT* EXCAVATIONS : NA
*PAVEMENT INCLUDES: IN OR UNDER CONCRETE, OR ASPHALT INCLUDING CURBS
SQ FT OF NON-PAVEMENT* EXCAVATIONS: 200 Sq Ft.
*DIRT, GRASS, GRAVEL, LANDSCAPE AREA OR OTHER UNPAVED SURFACE
LINEAL FT OF BORE*: NA
*BORE PITS SHALL BE CALCULATED AS SQ FT EXCAVATIONS
OF POLE INSTALLATIONS/REMOVAL: NA
SQ FT OF SIDEWALK RECONSTRUCTION*: 1000 Sq Ft
*CONCRETE OR ASPHALT SIDEWALK/PATH BEING IMPROVED/REPLACED
SQ FT OF SIDEWALK NEW CONSTRUCTION*: 1000 Sq Ft
*CONCRETE OR ASPHALT SIDEWALK/PATH THAT IS NEW INFRASTRUCTURE
#RESIDENTIAL DRIVEWAY INSTALLATION: NA

Indiana 811 — Know what's below. Call before you dig.

TO SUBMIT A LOCATE REQUEST 24 HRS A DAY, 7 DAYS A WEEK
CALL 811 OR 800-382-5544
CALL 2 WORKING DAYS BEFORE YOU DIG.
ITS THE LAW.

H. INDEMNIFICATION AGREEMENT:

The petitioner/applicant hereby agrees to hold harmless, defend and to indemnify the City of Bloomington from or against all claims, action, damages and expenses, including but not limited to reasonable attorney's fees or any alleged injury and/or death to any person or damage to any property arising, or alleged to have arisen out of any act of commission or omission on the part of the petitioner/applicant, his/her heirs, successors, or assigns regardless of whether such acts are the direct or indirect result of the public right-of-way use pursuant to this permit grant.

I AFFIRM, UNDER THE PENALTIES FOR PERJURY, THAT THE FOREGOING REPRESENTATIONS ARE TRUE.

PRINT NAME: Kerry J Dishman
SIGNATURE: Kerry Dishman
DATE: July - 29 - 31 10th/24

For Administration Use Only (applicable to CLOSURE approval)

Approved By: _____ ☐ BPW ☐ City Engineer ☐ Director Date: _____

Staff Representative: _____ Phone#: _____ Date: _____

VERSION 2/10/2021

Board of Public Works
Staff Report

Project/Event:	Permit Extension: McCalla School Retaining Wall & Sidewalk Replacement
Staff Representative:	Alex Gray
Petitioner/Representative:	Mike Brinson, Reed & Sons Construction
Date:	July 30th, 2024

Report: Reed & Sons is requesting an extension of their permit for work at the McCalla School along E 9th St and N Indiana Ave. The work involves the removal and replacement of the sidewalk and retaining wall in front of the school and had originally required the closure of the sidewalk and parking lane for 6 weeks. Due to construction delays with the wall replacement, the project is now anticipated to be completed on August 16th, 2024.

All streets have remained open throughout the project and there have not been any concerns from the maintenance of traffic control.

Mr Copy
Print shop
Marathon Gas
603
413
431
415
515
E 10th St
E 10th St
E 10th S
N Dunn St
526
426
430
528
524
520
512
521
516
510
508
513
N Indiana Ave
512
University Collections
at McCalla
McCalla School
525
504
509
508
506 1/2
505
506
Parking lane closed
for duration of project
to replace side walk
and curb work.
501
E 9th St
E 9th St
E 9th St
E 9th St
American Indian Studies

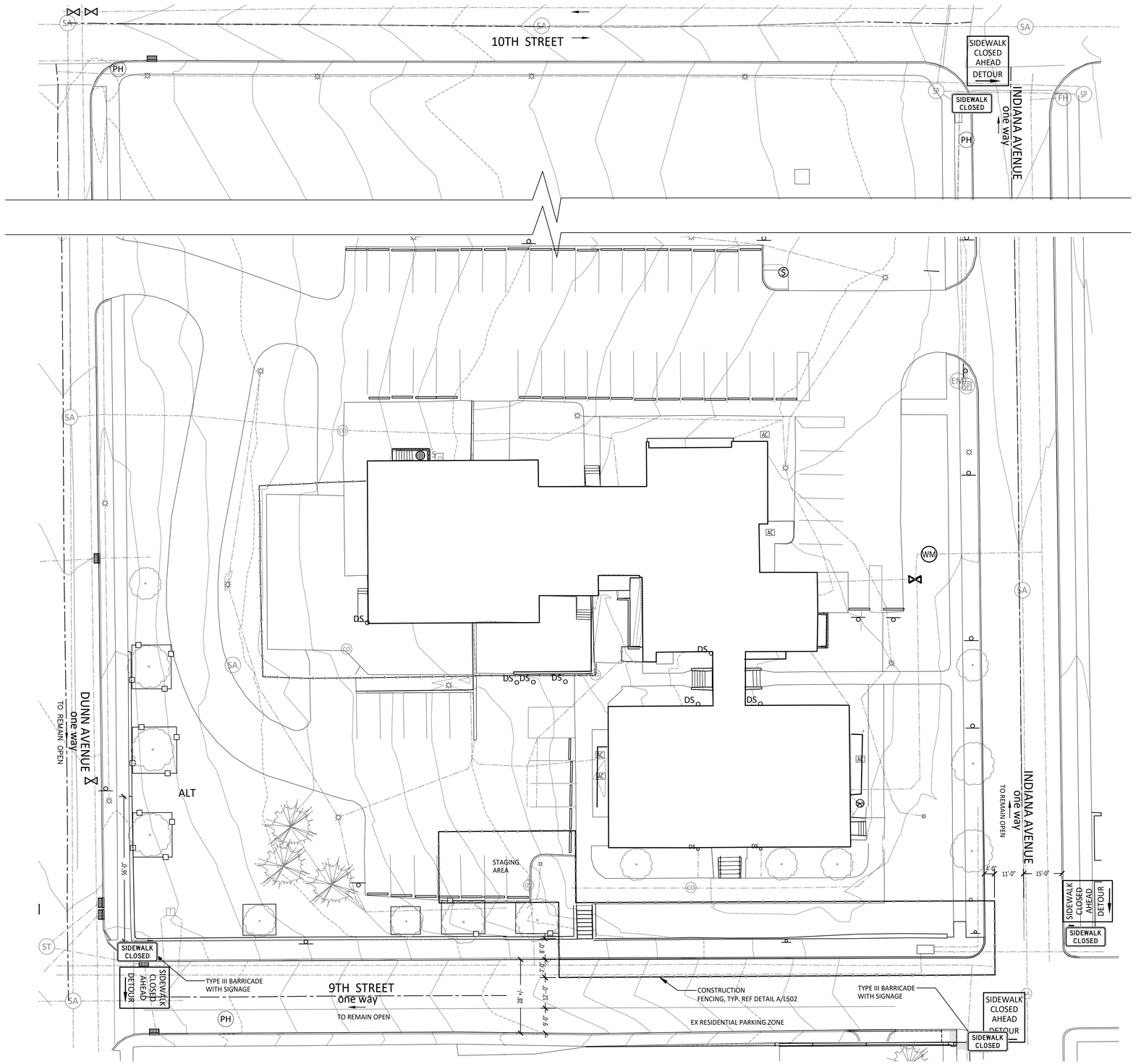

A PLAN
SCALE: SCALE: 1"=20'-0"

MAINTENANCE OF TRAFFIC (MOT)

NORTH

MOT NOTES:

1. THE MOT PLAN PROVIDED IS FOR REFERENCE ONLY AND MAY CHANGE. NOT ALL REQUIRED SIGNAGE AND BARRICADES ARE SHOWN.TRAFFIC CONTROL SHALL BE IN COMPLIANCE WITH THE MUTCD, CITY OF BLOOMINGTON STANDARD, THE STANDARD SPECIFICATIONS AND DETAIL SPECIFICATIONS.

2. THE CONTRACTOR SHALL SUBMIT TRAFFIC CONTROL PLANS TO INDIANA UNIVERSITY AND THE CITY OF BLOOMINGTON FOR VARIOUS SEGMENTS OF CONSTRUCTION. THE CONTRACTOR SHALL SUBMIT THEIR PROPOSED TRAFFIC CONTROL PLANS ALONG WITH PROJECT SCHEDULE AND SEQUENCE AS PER THE GENERAL NOTE AND SPECIFICATIONS.

3. THE CONTRACTOR SHALL BE RESPONSIBLE TO PROVIDE SIGNS AND PLACEMENT OF SAID SIGNS IN COMPLIANCE WITH THE MUTCD (LATEST EDITION), THE CURRENT INDOT STANDARDS, AND ACCEPTED PLAN FROM IU AND CITY OF BLOOMINGTON.

4. FOR WORK ZONES OCCUPYING A LOCATION FOR A SHORT DURATION (EITHER LESS THAN 1 HR OR A WORK ZONE THAT MOVES INTERMITTENTLY/CONTINUOUSLY), MOVEMENTS FROM EACH END SHALL BE COORDINATED BY FLAGGERS IF TRAFFIC IS FORCED TO USE A SINGLE LANE FOR A LIMITED DISTANCE.

5. WHEN THE TEMPORARY TRAFFIC CONTROL ZONE IS SHORT ENOUGH TO ALLOW A FLAGGER TO SEE FROM ONE END OF THE ZONE TO THE OTHER, TRAFFIC WILL BE CONTROLLED BY A FLAGGER AT EACH END OF THE SECTION.

6. FOR WORK ZONES OCCUPYING A LOCATION GREATER THAN 12 HOURS, BARRICADES AND/OR CONES SHALL BE USED.

GENERAL NOTES:

1. CONTRACTOR IS RESPONSIBLE FOR VERIFYING UTILITY LOCATIONS PRIOR TO CONSTRUCTION. CALL 811 AND 812.382.5544 FOR UTILITY LOCATES.

2. BUILDING FACADE SHALL BE PROTECTED DURING CONSTRUCTION. DAMAGE OCCURRING DURING CONSTRUCTION SHALL BE REPAIRED BY CONTRACTOR TO ARCHITECT/OWNER APPROVAL.

3. GENERAL CONTRACTOR TO FIELD CHECK AND VERIFY ALL DIMENSIONS, CONDITIONS AND LOCATIONS. REPORT DISCREPANCIES TO ARCHITECT.

4. CONTRACTOR SHALL COORDINATE WORK OF OTHER TRADES PRIOR TO START OF CONSTRUCTION.

5. EXISTING TREES SHALL REMAIN AND BE PROTECTED DURING CONSTRUCTION. CONTRUCTION TRAFFIC, AND STORAGE OF MATERIAL AND EQUIPMENT UNDER THE DRIP-LINE OF AN EXISTING TREE IS PROHIBITED.

6. PRIOR TO CONSTRUCTION, CONTRACTOR SHALL SCHEDULE AN ONSITE MEETING WITH ARCHITECT AND IU REPRESENTATIVE TO REVIEW SCOPE OF WORK AND TREE PROTECTION FENCING.

7. DEMOLISHED MATERIAL SHALL BE HAULED OFF SITE AND DISPOSED OF PROPERLY. BURYING OF DEMOLISHED MATERIAL ON SITE IS PROHIBITED.

8. STRUCTURES, FOOTINGS, SLABS, AND/OR FOUNDATIONS SHALL BE REMOVED COMPLETELY, OR AS INDICATED ON PLANS. BACKFILL WITH COMPACTED GRAVEL FILL IF IN AN AREA OF PROPOSED FILL.

9. PAVEMENT AND CURBS NOTED FOR REMOVAL SHALL BE SAWCUT TO FORM A CLEAN EDGE.

LEGEND:

- EXISTING CONCRETE AND STONE PAVERS TO BE REMOVED.
- EXISTING WALL TO BE REMOVED
- EXISTING TO BE REMOVED
- EXISTING TREES TO REMAIN
- EXISTING LIGHT POLE TO REMAIN
- CONSTRUCTION FENCING
- TREE PROTECTION FENCING
- EX OVERHEAD WIRES
- EX STORM SEWER
- EX GAS LINE
- EX UNDERGROUND UTILITY
- EX SANITARY LINE
- EX PHONE LINE
- EX WATER LINE
- EX MAJOR CONTOURS
- EX MINOR CONTOURS
- CO — EX CLEANOUT
- SA — EX SANITARY MANHOLE
- EX CATCH BASIN
- EM — EX ELECTRIC METER
- WM — EX WATER METER
- GM — EX GAS METER
- EX SIGN
- PH — EX PHONE POLE
- DS — EX DOWNSPOUT

springpoint ARCHITECTS
522 W. 2nd STREET
BLOOMINGTON, INDIANA 47403
812.318.2930
www.springpointarchitects.com

REED & SONS CONSTRUCTION 812-824-9237

Field Set
05/20/2024

certified

CHRISTINA A KROEGER
REGISTERED
No. LA21600003
INDIANA
LANDSCAPE ARCHITECT
02.27.24

project title

INDIANA UNIVERSITY #20230509
BL044 Mc CALLA
REPAIR RETAINING WALL ALONG 9TH
525 E. 9th STREET BLOOMINGTON, INDIANA

project information

PROJECT NUMBER:	23-45
ISSUE DATE:	100% CD 02.27.24
REVISION DATE:	--
DRAWN BY:	CK
CHECKED BY:	DG

sheet title

MAINTENANCE OF TRAFFIC PLAN

sheet number

L000

24-0009 MCCALLA RETAINING WALL FIELD SET - 05/20/2024

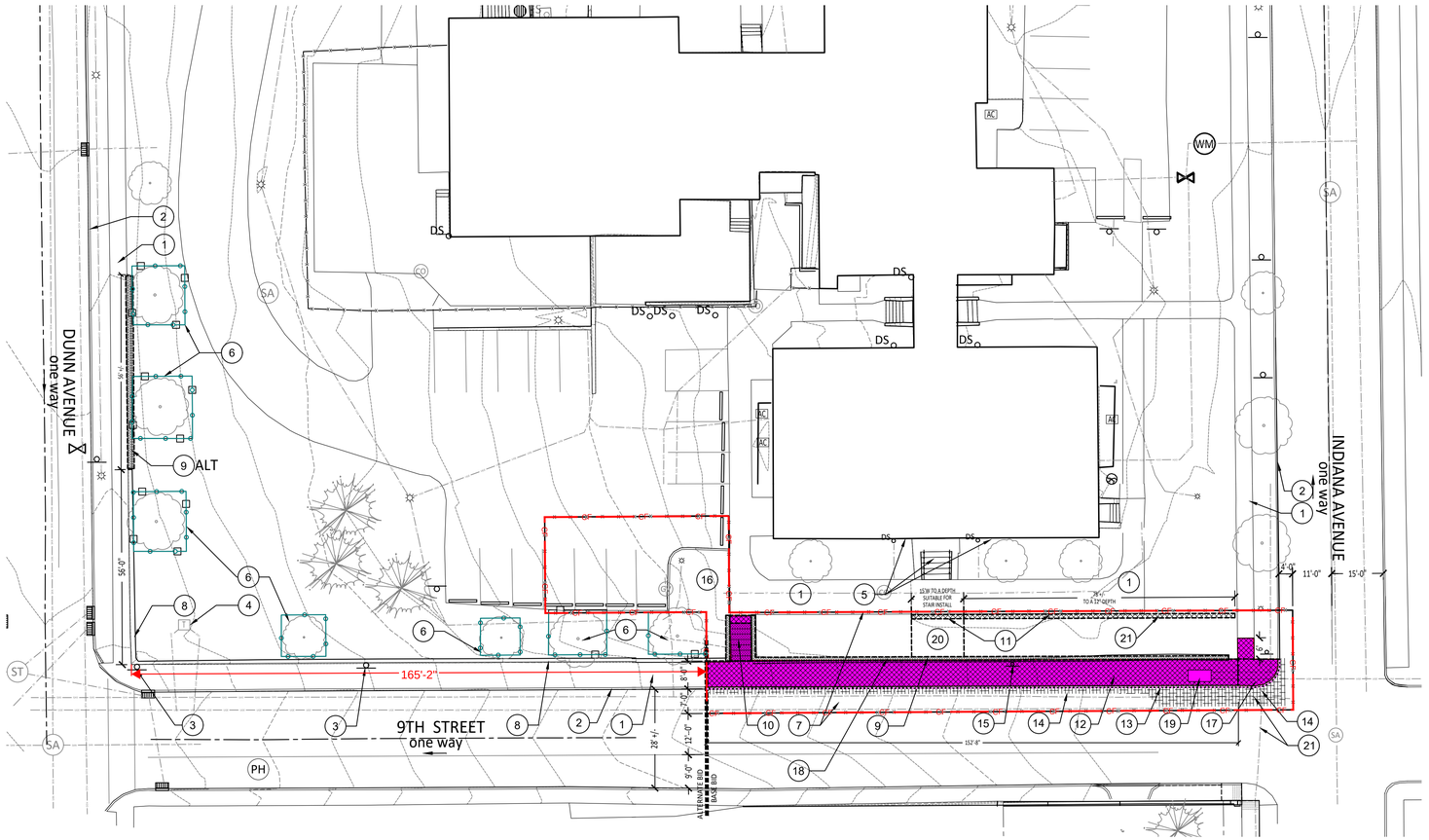

A DEMOLITION PLAN
SCALE: 1"=20'-0"
NORTH

DEMOLITION NOTES:

1. EXISTING CONCRETE SIDEWALK SHALL REMAIN AND BE PROTECTED.
2. EXISTING CONCRETE CURB SHALL REMAIN AND BE PROTECTED.
3. EXISTING SIGN SHALL REMAIN AND BE PROTECTED.
4. EXISTING TRANSFORMER SHALL REMAIN AND BE PROTECTED.
5. EXISTING BUILDING ENTRY, STAIRS, AND FACADE SHALL REMAIN AND BE PROTECTED.
6. EXISTING TREES TO REMAIN AND BE PROTECTED. PROVIDE TREE PROTECTION FENCING PER PLAN. EXISTING TREES ON SITE WITHOUT FENCING INDICATED SHALL REMAIN AND BE PROTECTED THROUGHOUT CONSTRUCTION. CONSTRUCTION TRAFFIC, STORING EQUIPMENT AND/OR MATERIAL UNDER THE DRIPLINE SHALL BE PROHIBITED. REF DETAIL B/L502.
7. CONSTRUCTION FENCING WITH SCREEN FABRIC, REF DETAIL A/L502.
8. EXISTING PORTION OF STONE WALL TO REMAIN.
   ALTERNATE: REPAIR STONE WALL AS INDICATED ON SITE PLAN L201.
9. EXISTING PORTION OF STONE WALL TO BE REMOVED AND HAULED OFF SITE. REF REMOVAL LIMITS THIS SHEET.
   ALTERNATE: EXISTING PORTION OF WALL ALONG DUNN SHALL BE REMOVED. AREA TO BE REGRADED. REF REMOVAL LIMITS THIS SHEET.
   REF SITE PLAN L201 FOR SPECIFIED IMPROVEMENTS.
10. EXISTING STONE STEPS, CHEEKWALLS, AND ASSOCIATED FOUNDATIONS SHALL BE REMOVED. STONE STEPS SHALL BE SALVED AND STORED ON SITE FOR OWNER. REF SITE PLAN L201 FOR SPECIFIED IMPROVEMENTS.
11. EXISTING FOUNDATION TO BE REMOVED. AT NEW STAIR LOCATION, REMOVE TO A DEPTH SUITABLE FOR STAIR INSTALLATION. REMOVE THE REMAINING FOUNDATION TO A DEPTH OF 12", SUITABLE FOR SOD GROWTH. REF THIS SHEET FOR LIMITS. REF SITE PLAN L201 FOR SPECIFIED IMPROVEMENTS.
12. EXISTING CONCRETE WALK TO BE REMOVED AND REPLACED. REF SITE PLAN L201
13. EXISTING CONCRETE CURB TO BE REMOVED AND REPLACED. REF SITE PLAN L201
14. EXISTING ASPHALT TO BE REMOVED FOR NEW CURB INSTALLATION. SAW CUT ASPHALT EDGE FOR REINSTALLATION. REF SITE PLAN L201 FOR SPECIFIED IMPROVEMENTS.
15. EXISTING SIGN TO BE REMOVED, SALVAGED ON SITE, AND REINSTALLED. REF SITE PLAN L201 AND DETAIL F/L502.
16. POTENTIAL STAGING AREA.
17. EXISTING RAMP TO BE REMOVED AND REPLACED. REF SITE PLAN L201 FOR SPECIFIED IMPROVEMENTS.
18. EXISTING OUTLET IN WALL FOR DRAIN PIPE. CONTRACTOR TO VERIFY THAT EXISTING PIPE HAS BEEN ABANDONED AND THAT DOWNSPOUTS HAVE BEEN REROUTED PER SURVEY.
19. INGROUND ELECTRICAL BOX TO REMAIN AND BE PROTECTED DURING CONSTRUCTION.
20. REMOVE GRADE THIS AREA FOR FUTURE IMPROVEMENTS. PROVIDE GRAVEL BACKFILL AS NEEDED. REF SHEET L201 FOR SPECIFIED IMPROVEMENTS.
21. EXISTING GAS LINE TO REMAIN. CONTRACTOR TO VERIFY DEPTH PRIOR TO DIGGING. REF SHEET L201 FOR SPECIFIED IMPROVEMENTS.

Erosion Control

Description	Quantity	Unit

GENERAL NOTES:

1. CONTRACTOR IS RESPONSIBLE FOR VERIFYING UTILITY LOCATIONS PRIOR TO CONSTRUCTION. CALL 811 AND 812.382.5544 FOR UTILITY LOCATES.
2. BUILDING FACADE SHALL BE PROTECTED DURING CONSTRUCTION. DAMAGE OCCURRING DURING CONSTRUCTION SHALL BE REPAIRED BY CONTRACTOR TO ARCHITECT/OWNER APPROVAL.
3. GENERAL CONTRACTOR TO FIELD CHECK AND VERIFY ALL DIMENSIONS, CONDITIONS AND LOCATIONS. REPORT DISCREPANCIES TO ARCHITECT.
4. CONTRACTOR SHALL COORDINATE WORK OF OTHER TRADES PRIOR TO START OF CONSTRUCTION.
5. EXISTING TREES SHALL REMAIN AND BE PROTECTED DURING CONSTRUCTION. CONTRUCTION TRAFFIC, AND STORAGE OF MATERIAL AND EQUIPMENT UNDER THE DRIP-LINE OF AN EXISTING TREE IS PROHIBITED.
6. PRIOR TO CONSTRUCTION, CONTRACTOR SHALL SCHEDULE AN ONSITE MEETING WITH ARCHITECT AND IU REPRESENTATIVE TO REVIEW SCOPE OF WORK AND TREE PROTECTION FENCING.
7. DEMOLISHED MATERIAL SHALL BE HAULED OFF SITE AND DISPOSED OF PROPERLY. BURYING OF DEMOLISHED MATERIAL ON SITE IS PROHIBITED.
8. STRUCTURES, FOOTINGS, SLABS, AND/OR FOUNDATIONS SHALL BE REMOVED COMPLETELY, OR AS INDICAATED ON PLANS. BACKFILL WITH COMPACTED GRAVEL FILL OR TOPSOIL AS INDICATED ON PLANS.
9. PAVEMENT AND CURBS NOTED FOR REMOVAL SHALL BE SAWCUT TO FORM A CLEAN EDGE.

LEGEND:

- EXISTING CONCRETE TO BE REMOVED.
- EXISTING ASPHALT TO BE REMOVED.
- EXISTING STONE WALL AND STEPS TO BE REMOVED
- EXISTING TO BE REMOVED
- EXISTING TREES TO REMAIN
- EXISTING LIGHT POLE TO REMAIN
- CONSTRUCTION FENCING
- TREE PROTECTION FENCING
- EX OVERHEAD WIRES
- EX STORM SEWER
- EX GAS LINE
- EX UNDERGROUND UTILITY
- EX SANITARY LINE
- EX PHONE LINE
- EX WATER LINE
- EX MAJOR CONTOURS
- EX MINOR CONTOURS
- CO EX CLEANOUT
- SA EX SANITARY MANHOLE
- EX CATCH BASIN
- EM EX ELECTRIC METER
- WM EX WATER METER
- GM EX GAS METER
- EX SIGN
- PH EX PHONE POLE
- DS EX DOWNSPOUT

springpoint ARCHITECTS
522 W. 2nd STREET
BLOOMINGTON, INDIANA 47403
812.318.2930
www.springpointarchitects.com

REED & SONS CONSTRUCTION 812-824-9237

Field Set
05/20/2024

certified

CHRISTINA A KROEGER REGISTERED No. LA21600003 INDIANA LANDSCAPE ARCHITECT
02.27.24

project title

INDIANA UNIVERSITY #2023509
BL044 Mc CALLA
REPAIR RETANINING WALL ALONG 9TH
525 E. 9th STREET BLOOMINGTON, INDIANA

project information

PROJECT NUMBER:	23-45
ISSUE DATE:	100% CD 02.27.24
REVISION DATE:	--
DRAWN BY:	CK
CHECKED BY:	DG

sheet title

DEMOLITION PLAN

sheet number

L 101

24-0009 MCCALLA RETAINING WALL FIELD SET - 05/20/2024

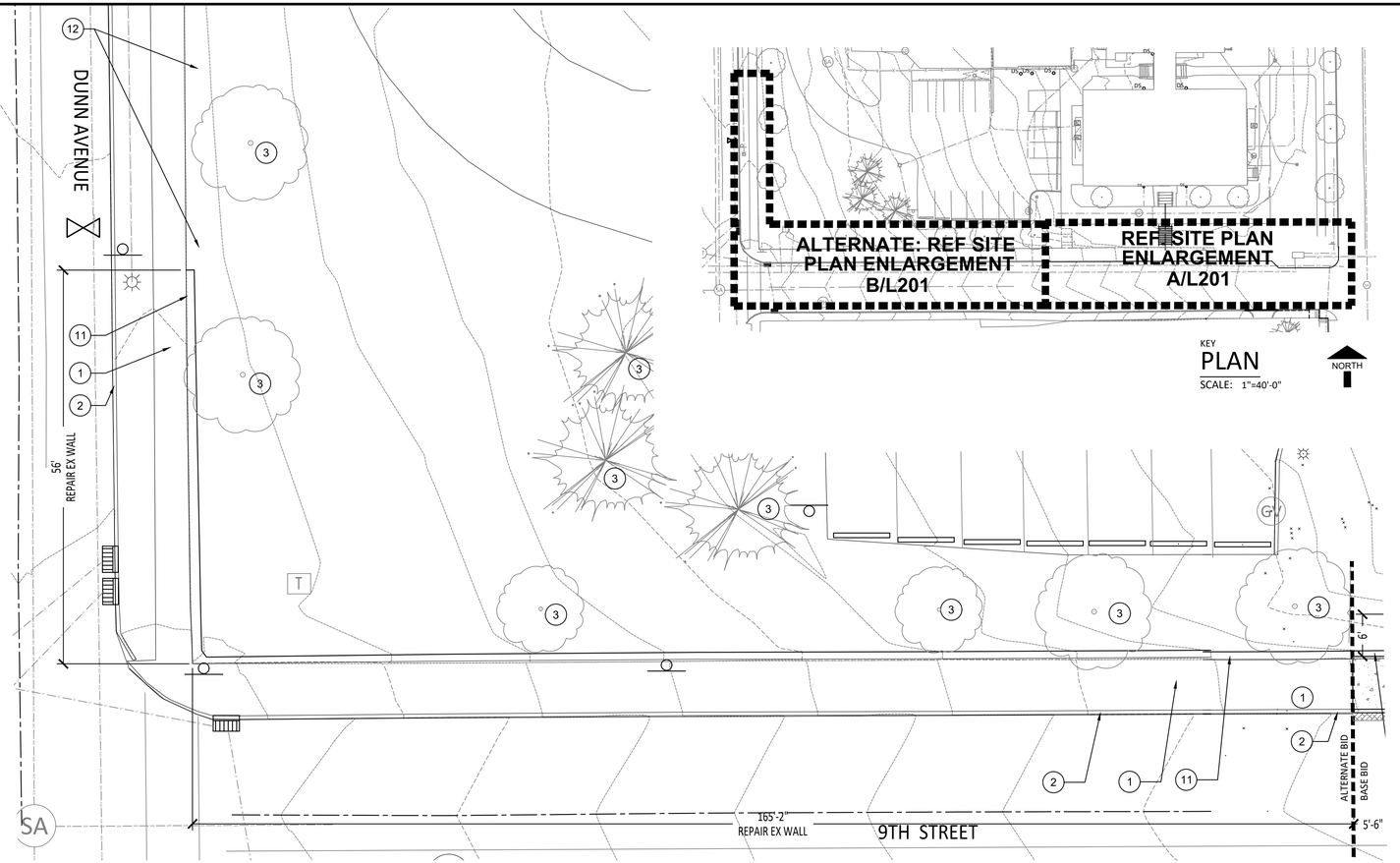

B ALTERNATE: ENLARGEMENT SITE PLAN
SCALE: 1"=10'-0"

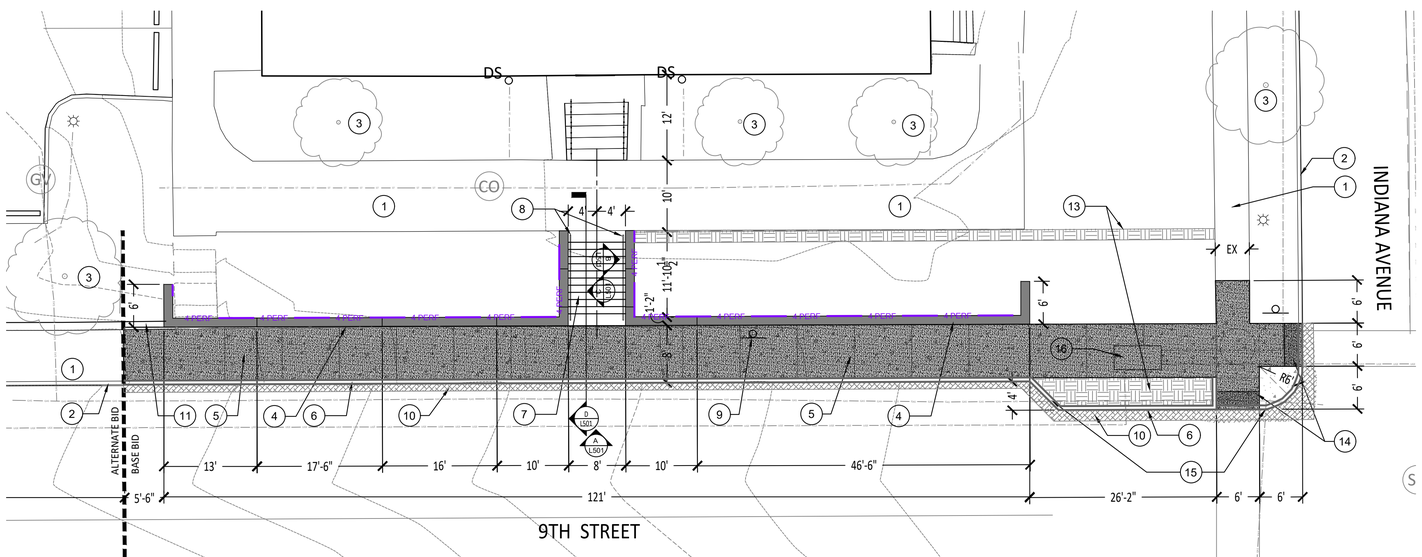

A ENLARGEMENT SITE PLAN
SCALE: 1"=10'-0"

SITE PLAN NOTES:

1. EXISTING CONCRETE SIDEWALK TO REMAIN AND BE PROTECTED DURING CONSTRUCTION.
2. EXISTING CONCRETE CURB TO REMAIN AND BE PROTECTED DURING CONSTRUCTION.
3. EXISTING TREES TO REMAIN AND BE PROTECTED DURING CONSTRUCTION. REF. SHEET L101 FOR TREE PROTECTION.
4. PROPOSED WALL WITH STONE VENEER AND CAP, TYP. REF SHEET L501 FOR ELEVATIONS AND DETAIL E/L501.
5. PROPOSED CONCRETE SIDEWALK TO REPLACE EXISTING. SIDEWALK GRADE, WIDTH, AND ELEVATION SHALL MATCH EXISTING, TYP. COLOR SHALL BE STANDARD GRAY. REF SHEET L301 FOR GRADING AND DETAIL E/L502.
6. PROPOSED CONCRETE CURB TO REPLACE EXISTING. CURB GRADE AND ELEVATION SHALL MATCH EXISTING UNLESS OTHERWISE NOTED ON PLANS. CURB SHALL BE STANDARD GRAY. REF SHEET L301 FOR GRADES AND DETAIL D/L502.
7. PROPOSED CONCRETE STEPS AND LANDINGS WITH INTEGRAL COLOR. COLOR: SCOFIELD IU BEIGE. REF SECTION D/L501.
8. HANDRAIL, 36"H, POWDERCOAT BLACK STEEL, MATCH EXISTING RAILINGS ON SITE. REF SECTION D/L501.
9. EXISTING SALVAGED SIGN TO BE REINSTALLED. REF DETAIL F/L502.
10. PROVIDE ASPHALT PATCH ALONG NEW CURB, TYP. REF DETAIL D/L502.
11. EXISTING STONE WALL TO REMAIN. *ALTERNATE:* REMOVE AND SALVAGE TOP CAP. REMOVE TOPSOIL AND REGRADE SLOPE ALONG TOP OF WALL TO ALLOW FOR CAP REINSTALLATION. RESET CAP WITH MORTAR BASE. TYP FOR REMAINING STONE WALLS ALONG INDIANA AND DUNN. REF SHEET L401 FOR NEW SOD ALONG TOP OF WALL.
12. *ALTERNATE:* REGRADE AREA TO PROVIDE EVEN SLOPE. FINISH GRADE SHALL SIT 1 INCH BELOW SIDEWALK AND BE FREE OF DELIRIOUS MATERIAL AND LARGE CLUMPS. REF SHEET L401 FOR SOD IN THIS AREA.
13. ADD 12 INCH DEPTH OF TOPSOIL WHERE FOUNDATION WAS REMOVED, TYP. REF PLANTING PLAN L401 FOR SOD.
14. SIDEWALK RAMP WITH CAST IRON DETECTABLE WARNING PLATES. RAMP SHALL ADHERE TO INDOT STANDARDS FOR ADA COMPLIANCE. PROD: WARNING PLATES BY EAST JORDAN OR NEENAH FOUNDRY PER COB ENGINEERS DETECTABLE WARNING SURFACES APPROVED MATERIAL LIST. REF SHEET L301 FOR GRADES AND DETAILS H/L502.
15. BRIDGE CONCRETE CURB, IF APPLICABLE, WHERE GAS LINE INTERSECTS. FOLLOW COB ENGINEER REQUIREMENTS FOR GRAVEL FILL AROUND UTILITIES, TYP.
16. EXISTING IN-GROUND ELECTRICAL BOX TO REMAIN. POUR CONCRETE PAD TO BE FLUSH WITH EXISTING BOX PAD ELEVATIONS. PROVIDE ½ INCH EXP JOINT, CAULK.

Stormwater Sewer
Description Quantity Unit

Exterior Improvements
Description Quantity Unit

GENERAL NOTES:

1. CONTRACTOR IS RESPONSIBLE FOR VERIFYING UTILITY LOCATIONS PRIOR TO CONSTRUCTION. CALL 811 AND 812.382.5544 FOR UTILITY LOCATES.
2. BUILDING FACADE SHALL BE PROTECTED DURING CONSTRUCTION. DAMAGE OCCURRING DURING CONSTRUCTION SHALL BE REPAIRED BY CONTRACTOR TO ARCHITECT/OWNER APPROVAL.
3. GENERAL CONTRACTOR TO FIELD CHECK AND VERIFY ALL DIMENSIONS, CONDITIONS AND LOCATIONS. REPORT DISCREPANCIES TO ARCHITECT.
4. CONTRACTOR SHALL COORDINATE WORK OF OTHER TRADES PRIOR TO START OF CONSTRUCTION.
5. EXISTING TREES SHALL REMAIN AND BE PROTECTED DURING CONSTRUCTION. STORAGE OF MATERIAL AND EQUIPMENT UNDER THE DRIP-LINE OF AN EXISTING TREE IS PROHIBITED.
6. PRIOR TO CONSTRUCTION, CONTRACTOR SHALL SCHEDULE AN ONSITE MEETING WITH ARCHITECT AND IU REPRESENTATIVE TO REVIEW SCOPE OF WORK AND TREE PROTECTION FENCING.
7. DEMOLISHED MATERIAL SHALL BE HAULED OFF SITE AND DISPOSED OF PROPERLY. BURYING OF DEMOLISHED MATERIAL ON SITE IS PROHIBITED.
8. STRUCTURES, FOOTINGS, SLABS, AND/OR FOUNDATIONS SHALL BE REMOVED COMPLETELY, OR AS INDICATED ON PLANS. BACKFILL WITH COMPACTED GRAVEL FILL OR TOPSOIL AS INDICATED ON PLANS.
9. PAVEMENT AND CURBS NOTED FOR REMOVAL SHALL BE SAWCUT TO FORM A CLEAN EDGE.
10. TYPICAL EXTERIOR STAIR REQUIREMENTS (REF PLAN NOTES FOR PROJECT SPECIFIED RISER AND TREAD DIMENSIONS):
    - -RISER HEIGHT SHALL NOT EXCEED 7 IN.
    - -RISER HEIGHT SHALL NOT BE UNDER 4 IN.
- -MINIMUM TREAD DEPTH SHALL BE 11 IN.
    - -RISER HEIGHTS AND TREAD DEPTHS SHALL BE CONSISTENT THROUGHOUT STAIRCASE AND NOT VARY MORE THAN ¾ IN BETWEEN STEPS.

LEGEND:

- PROPOSED CONCRETE
- PROPOSED ASPHALT
- PROPOSED TOPSOIL
- EXISTING TREES TO REMAIN
- CONSTRUCTION FENCING
- TREE PROTECTION FENCING
- EX OVERHEAD WIRES
- EX STORM SEWER
- EX GAS LINE
- EX UNDERGROUND UTILITY
- EX SANITARY LINE
- EX PHONE LINE
- EX WATER LINE
- EX MAJOR CONTOURS
- EX MINOR CONTOURS
- CO EX CLEANOUT
- SA EX SANITARY MANHOLE
- EX CATCH BASIN
- EM EX ELECTRIC METER
- WM EX WATER METER
- GM EX GAS METER
- EX SIGN
- PH EX PHONE POLE
- DS EX DOWNSPOUT

springpoint ARCHITECTS
522 W. 2nd STREET
BLOOMINGTON, INDIANA 47403
812.318.2930
www.springpointarchitects.com

REED & SONS CONSTRUCTION 812-824-9237 **Field Set** 05/20/2024

certified

CHRISTINA A KRODER REGISTERED No. LA21600003 LANDSCAPE ARCHITECT INDIANA 02.27.24

project title

INDIANA UNIVERSITY #20230509
BL044 Mc CALLA
REPAIR RETAINING WALL ALONG 9TH
525 E. 9th STREET
BLOOMINGTON, INDIANA

project information

PROJECT NUMBER:		23-45
ISSUE DATE:	100% CD	02.27.24
REVISION DATE:		--
DRAWN BY:		CK
CHECKED BY:		BK

sheet title

ENLARGED SITE PLAN

sheet number

L.201

24-0009 MCCALLA RETAINING WALL FIELD SET - 05/20/2024

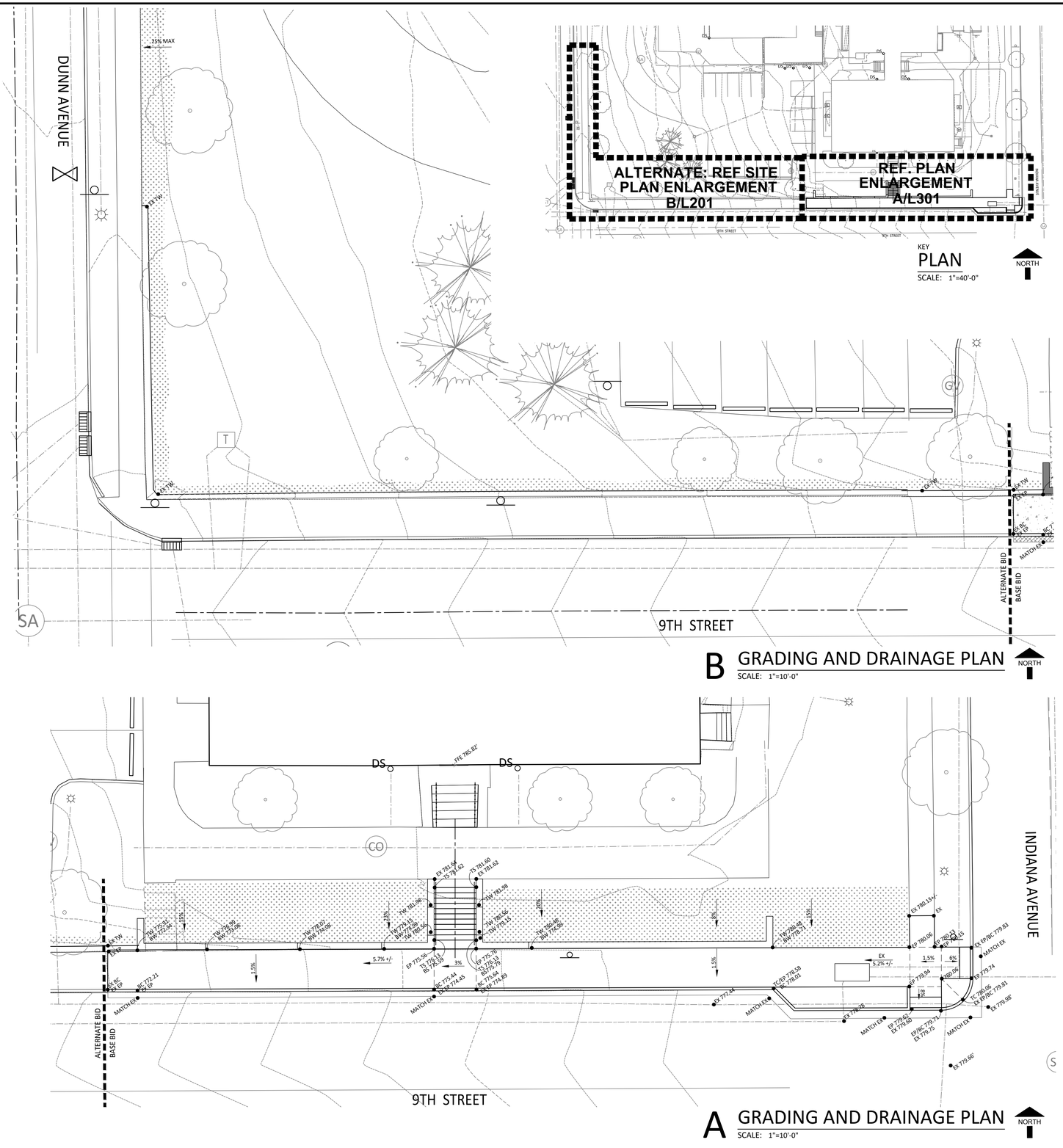

GENERAL NOTES:

1. CONTRACTOR IS RESPONSIBLE FOR VERIFYING UTILITY LOCATIONS PRIOR TO CONSTRUCTION. CALL 811 AND 812.382.5544 FOR UTILITY LOCATES.

2. BUILDING FACADE SHALL BE PROTECTED DURING CONSTRUCTION. DAMAGE OCCURRING DURING CONSTRUCTION SHALL BE REPAIRED BY CONTRACTOR TO ARCHITECT/OWNER APPROVAL.

3. GENERAL CONTRACTOR TO FIELD CHECK AND VERIFY ALL DIMENSIONS, CONDITIONS AND LOCATIONS. REPORT DISCREPANCIES TO ARCHITECT.

4. CONTRACTOR SHALL COORDINATE WORK OF OTHER TRADES PRIOR TO START OF CONSTRUCTION.

5. EXISTING TREES SHALL REMAIN AND BE PROTECTED DURING CONSTRUCTION. STORAGE OF MATERIAL AND EQUIPMENT UNDER THE DRIP-LINE OF AN EXISTING TREE IS PROHIBITED.

6. PRIOR TO CONSTRUCTION, CONTRACTOR SHALL SCHEDULE AN ONSITE MEETING WITH ARCHITECT AND IU REPRESENTATIVE TO REVIEW SCOPE OF WORK AND TREE PROTECTION FENCING.

7. DEMOLISHED MATERIAL SHALL BE HAULED OFF SITE AND DISPOSED OF PROPERLY. BURYING OF DEMOLISHED MATERIAL ON SITE IS PROHIBITED.

8. STRUCTURES, FOOTINGS, SLABS, AND/OR FOUNDATIONS SHALL BE REMOVED COMPLETELY, OR AS INDICATED ON PLANS. BACKFILL WITH COMPACTED GRAVEL FILL OR TOPSOIL AS INDICATED ON PLANS.

9. PAVEMENT AND CURBS NOTED FOR REMOVAL SHALL BE SAWCUT TO FORM A CLEAN EDGE.

10. TYPICAL EXTERIOR STAIR REQUIREMENTS (REF PLAN NOTES FOR PROJECT SPECIFIED RISER AND TREAD DIMENSIONS):
- -RISER HEIGHT SHALL NOT EXCEED 7 IN.
- -RISER HEIGHT SHALL NOT BE UNDER 4 IN.
- -MINIMUM TREAD DEPTH SHALL BE 11 IN.
- -RISER HEIGHTS AND TREAD DEPTHS SHALL BE CONSISTENT THROUGHOUT STAIRCASE AND NOT VARY MORE THAN ½ IN BETWEEN STEPS.

LEGEND:

BC	BOTTOM OF CURB
BS	BOTTOM OF STEP
EP	EDGE OF PAVEMENT
EX	EXISTING
TC	TOP OF CURB
TS	TOP OF STEP
TW	TOP OF WALL
X%	PERCENT SLOPE
	AREA OF REGRADE
	PROPOSED CONCRETE
	PROPOSED ASPHALT
	PROPOSED TOPSOIL
	EXISTING TREES TO REMAIN
	CONSTRUCTION FENCING
	TREE PROTECTION FENCING
	EX OVERHEAD WIRES
	EX STORM SEWER
	EX GAS LINE
	EX UNDERGROUND UTILITY
	EX SANITARY LINE
	EX PHONE LINE
	EX WATER LINE
	EX MAJOR CONTOURS
	EX MINOR CONTOURS
CO	EX CLEANOUT
SA	EX SANITARY MANHOLE
	EX CATCH BASIN
EM	EX ELECTRIC METER
WM	EX WATER METER
GM	EX GAS METER
	EX SIGN
PH	EX PHONE POLE
DS	EX DOWNSPOUT

springpoint ARCHITECTS
522 W. 2nd STREET
BLOOMINGTON, INDIANA 47403
812.318.2930
www.springpointarchitects.com

REED & SONS CONSTRUCTION 812-824-9237

Field Set 05/20/2024

certified

CHRISTINA A KREEGER REGISTERED No. LA21600003 LANDSCAPE ARCHITECT INDIANA 02.27.24

project title

INDIANA UNIVERSITY #20230509
BL044 Mc CALLA
REPAIR RETAINING WALL ALONG 9TH
525 E. 9th STREET
BLOOMINGTON, INDIANA

project information

PROJECT NUMBER:	23-45
ISSUE DATE:	100% CD 02.27.24
REVISION DATE:	--
DRAWN BY:	CK
CHECKED BY:	BK

sheet title

GRADING AND DRAINAGE PLAN

sheet number

L.301

24-0009 MCCALLA RETAINING WALL FIELD SET - 05/20/2024

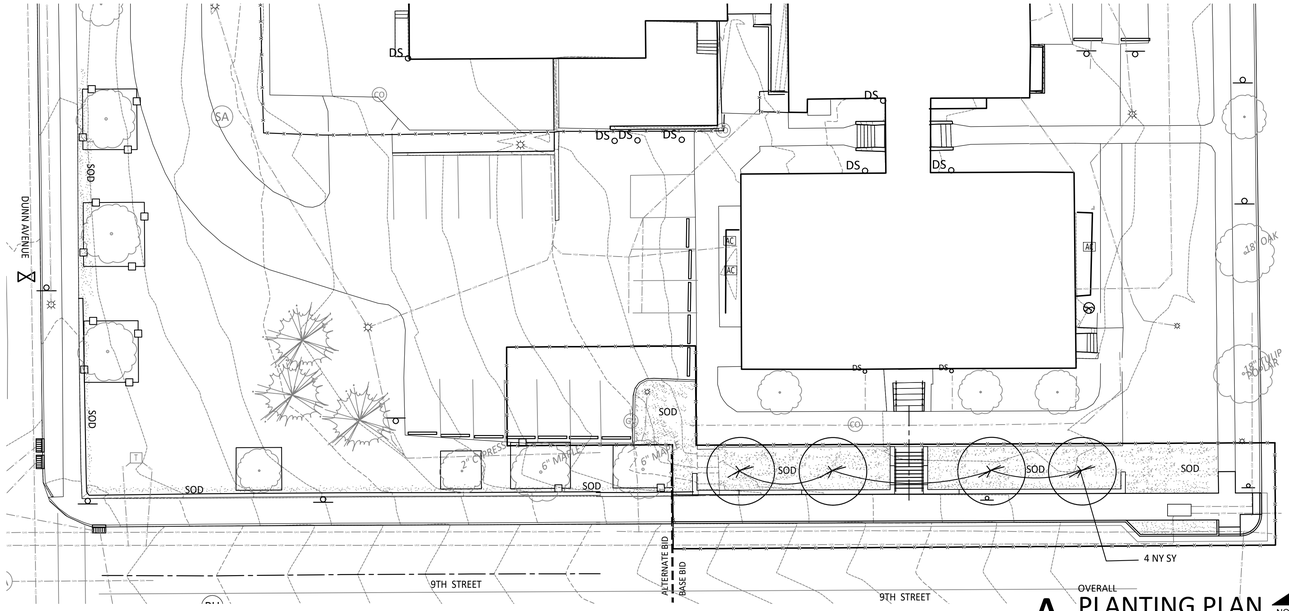

A OVERALL PLANTING PLAN
SCALE: 1"=20'-0"

NORTH

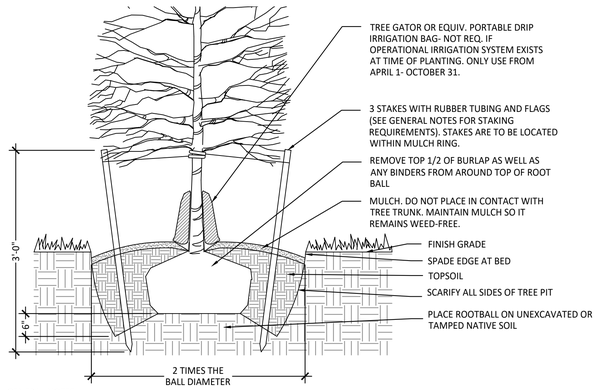

GENERAL NOTES

1. STAKE TREES ONLY IF THEY DO NOT REMAIN PLUMB.

2. DO NOT HEAVILY PRUNE TREES AT PLANTING. PRUNE ONLY CROSSOVER LIMBS, CO-DOMINANT LEADERS, AND BROKEN OR DEAD BRANCHES. SOME INTERIOR TWIGS AND LATERAL BRANCHES MAY BE PRUNED; HOWEVER, DO NOT REMOVE THE TERMINAL BUDS OF BRANCHES THAT EXTEND TO THE EDGE OF THE CROWN.

3. TREES MUST BE PLANTED SUCH THAT THE TRUNK FLARE IS VISIBLE AT THE TOP OF THE ROOT BALL. DO NOT COVER THE TOP OF THE ROOT BALL WITH SOIL. AFTER INSTALLATION, FINISH GRADE OF ROOT BALL SHOULD BE AT OR ABOVE SURROUNDING FINISH GRADE

B TREE PLANTING DETAIL
SCALE: 1"=1'-0

PLANT LIST

KEY	BOTANICAL NAME	COMMON NAME	QNTY	SIZE
TREES				
NY SY	Nyssa sylvatica	Black Gum	4	2"cal.

1. LAWN: SHALL BE SOD PER PLAN.
   -Tall Fescue Blend (100%)

GENERAL PLANTING NOTES

1. CONTRACTOR IS RESPONSIBLE FOR VERIFYING UTILITY LOCATIONS PRIOR TO CONSTRUCTION. CALL 811 FOR UTILITY LOCATES.

2. CONTRACTOR SHALL VERIFY DIMENSIONS AND LOCATIONS IN FIELD PRIOR TO CONSTRUCTION.

3. DAMAGE OCCURING DURING CONSTRUCTION THAT FALLS BEYOND THE LIMITS OF CONSTRUCTION SHALL BE REPAIRED BY CONTRACTOR TO ARCHITECT APPROVAL.

4. EXISTING TREES NOTED ON PLANS TO REMAIN SHALL BE PROTECTED DURING CONSTRUCTION. REF L101 FOR CONSTRUCTION AND TREE PROTECTION FENCE LOCATIONS. CONSTRUCTION MOVEMENT AND STORAGE OF MATERIAL AND EQUIPMENT UNDER THE DRIPLINE OF AN EXISTING TREE IS PROHIBITED.

5. MULCH: PROVIDE 2-3" LAYER OF ORGANIC SHREDDED BARK MULCH AROUND TREES AND THROUGHOUT PLANT BEDS UNLESS OTHERWISE NOTED.

6. CONTAINER OR BALL AND BURLAP ARE ACCEPTABLE

7. PLANT MATERIALS SHALL CONFORM TO THE REQUIREMENTS DESCRIBED IN THE LATEST EDITION OF THE AMERICAN STANDARD FOR NURSERY STOCK, WHICH IS PUBLISHED BY THE AMERICAN ASSOCIATION OF NURSERYMEN. PLANTS SHALL BE NURSERY GROWN.

8. THE CONTRACTOR IS RESPONSIBLE FOR FULLY MAINTAINING ALL PLANTING AND LAWN AREAS INCLUDING, BUT NOT LIMITED TO: WATERING, SPRAYING, MULCHING, PRUNING, FERTILIZING, ETC., UNTIL WORK IS ACCEPTED IN FULL BY THE OWNER.

9. THE CONTRACTOR SHALL COMPLETELY GUARANTEE ALL PLANT MATERIAL FOR A PERIOD OF ONE (1) YEAR BEGINNING ON THE DATE OF TOTAL ACCEPTANCE. THE CONTRACTOR SHALL PROMPTLY MAKE ALL REPLACEMENTS BEFORE OR AT THE END OF THE GUARANTEE PERIOD.

10. THE OWNER/ARCHITECT SHALL APPROVE THE STAKING LOCATION OF ALL PLANT MATERIAL PRIOR TO INSTALLATION.

11. ALL DISTURBED AREAS NOT INCLUDED IN LANDSCAPE MULCH BEDS ARE TO BE DEBRIS-RAKED AND FINED-GRADED AS NEEDED, THEN MULCH SEEDED (OR SODDED, PER PLAN) AND WATERED UNTIL A HEALTHY STAND OF TURF IS ESTABLISHED.

12. ANY PLANT OR OTHER LANDSCAPE MATERIAL SUBSTITUTIONS INSTALLED WITHOUT DESIGNER AND/OR OWNER APPROVAL SHALL BE REPLACED AT CONTRACTOR'S EXPENSE. ALL PLANTS ARE SUBJECT TO THE APPROVAL OF THE OWNER/ARCHITECT BEFORE, DURING AND AFTER INSTALLATION.

13. TREES SHALL BE PLANTED TO MAINTAIN A MINIMUM 10' DISTANCE BETWEEN TREE TRUNK AND UTILITY MAINS SUCH AS WATER, SANITARY SEWER, GAS, AND STORM. TREES SHALL ALSO MAINTAIN A 5' CLEARANCE BETWEEN TREE TRUNK AND STRUCTURES, BUILDING OVERHANGS, WALLS, FENCES, PROPERTY LINES, AND OTHER TREES.

LEGEND:

- PROPOSED LARGE DECIDUOUS TREE
- PROPOSED SOD
- PROPOSED CONCRETE
- EXISTING TREES TO REMAIN
- CONSTRUCTION FENCING
- TREE PROTECTION FENCING
- EX OVERHEAD WIRES
- EX STORM SEWER
- EX GAS LINE
- EX UNDERGROUND UTILITY
- EX SANITARY LINE
- EX PHONE LINE
- EX WATER LINE
- EX MAJOR CONTOURS
- EX MINOR CONTOURS
- CO EX CLEANOUT
- SA EX SANITARY MANHOLE
- EX CATCH BASIN
- EM EX ELECTRIC METER
- WM EX WATER METER
- GM EX GAS METER
- EX SIGN
- PH EX PHONE POLE
- DS EX DOWNSPOUT

springpoint ARCHITECTS, llc
522 W. 2nd STREET
BLOOMINGTON, INDIANA 47403
812.318.2930
www.springpointarchitects.com

REED & SONS CONSTRUCTION 812-824-5237

Field Set
05/20/2024

certified

CHRISTINA A KRODER REGISTERED No. LA21600003 LANDSCAPE ARCHITECT INDIANA 02.27.24

project title

INDIANA UNIVERSITY #20230509
BL044 Mc CALLA
REPAIR RETAINING WALL ALONG 9TH
525 E. 9th STREET
BLOOMINGTON, INDIANA

project information

PROJECT NUMBER:	23-45
ISSUE DATE:	100% CD 02.27.24
REVISION DATE:	--
DRAWN BY:	CK
CHECKED BY:	BK

sheet title

PLANTING PLAN

sheet number

L.401

24-0009 MCCALLA RETAINING WALL FIELD SET - 05/20/2024

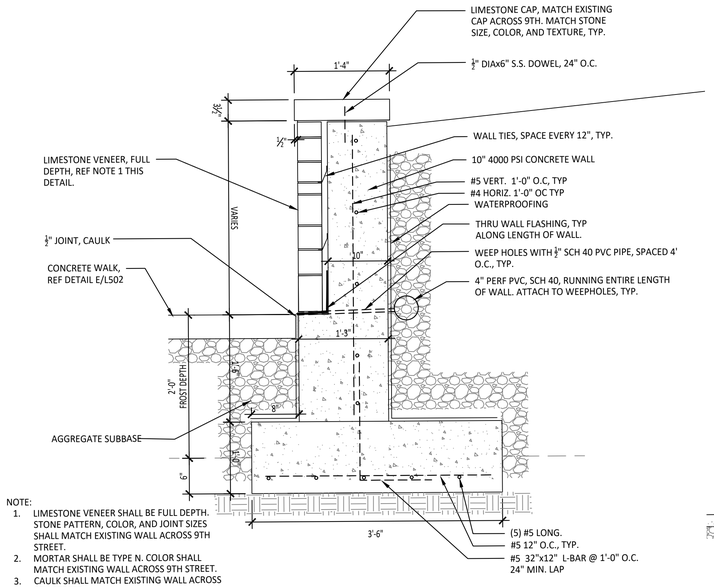

NOTE:
1. LIMESTONE VENEER SHALL BE FULL DEPTH. STONE PATTERN, COLOR, AND JOINT SIZES SHALL MATCH EXISTING WALL ACROSS 9TH STREET.
2. MORTAR SHALL BE TYPE N. COLOR SHALL MATCH EXISTING WALL ACROSS 9TH STREET.
3. CAULK SHALL MATCH EXISTING WALL ACROSS 9TH STREET.
4. PROVIDE ¾"W x ¾"D CONTRACTION JOINTS EVERY 20'+/-.

TYPICAL WALL
E SECTION
SCALE: 1"=1'-0"

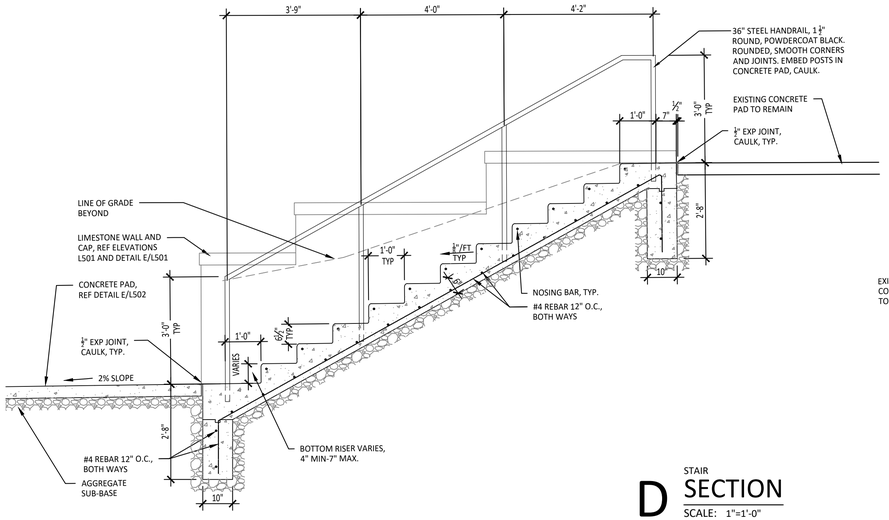

STAIR
D SECTION
SCALE: 1"=1'-0"

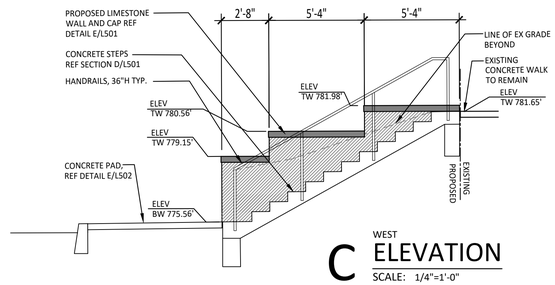

WEST
C ELEVATION
SCALE: 1/4"=1'-0"

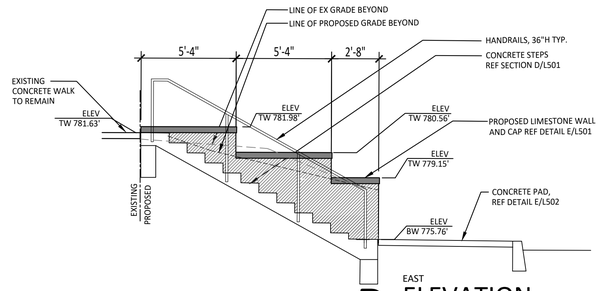

EAST
B ELEVATION
SCALE: 1/4"=1'-0"

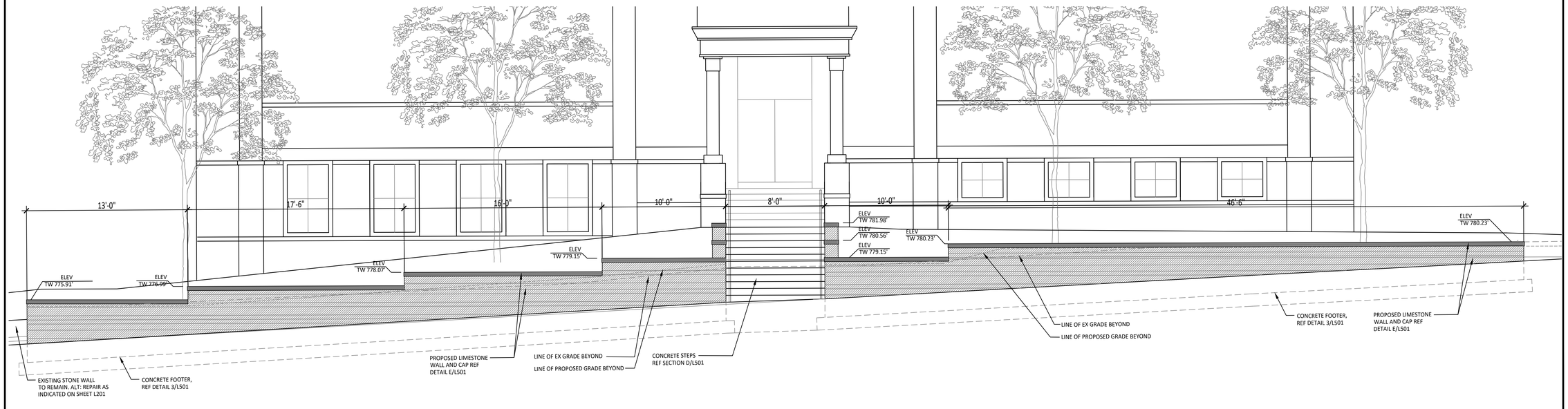

SOUTH
A ELEVATION
SCALE: 1/4"=1'-0"

springpoint ARCHITECTS
522 W. 2nd STREET
BLOOMINGTON, INDIANA 47403
812.318.2930
www.springpointarchitects.com

REED & SONS CONSTRUCTION 812-824-9237
Field Set 05/20/2024
certified

CHRISTINA A KROEGER REGISTERED No. LA21600003 INDIANA LANDSCAPE ARCHITECT 02.27.24

project title

INDIANA UNIVERSITY #20230509
BL044 Mc CALLA
REPAIR RETAINING WALL ALONG 9TH

525 E. 9th STREET
BLOOMINGTON, INDIANA

project information

PROJECT NUMBER:	23-45
ISSUE DATE:	100% CD 02.27.24
REVISION DATE:	--
DRAWN BY:	CK
CHECKED BY:	DG

sheet title

ELEVATIONS AND SECTIONS

sheet number

L.501

24-0009 MCCALLA RETAINING WALL FIELD SET - 05/20/2024

INDEX

SHEET NO.	SUBJECT
1	Curb Ramp Drawing Index and General Notes
2-3	Perpendicular Curb Ramp Typical Placement
4	Perpendicular Curb Ramp Component Details
5	One-Way-Directional Perpendicular Curb Ramp Typical Placement
6	One-Way-Directional Perpendicular Curb Ramp Component Details
7	Parallel Curb Ramps Typical Placement
8	Parallel Curb Ramp Component Details
9	Blended Transition Curb Ramp, Depressed Curb Ramp and Diagonal Curb Ramp Typical Placement
10	Blended Transition Curb Ramp Component Details
11	Median Cut-Through and Median Perpendicular Curb Ramp Typical Placement
12-13	Detectable Warning Surface Placement and Configuration
14	Detectable Warning Surface Details

GENERAL NOTES:

1. All slopes are absolute rather than relative to the sidewalk or roadway grade. Slopes at least 0.50% less than the maximum are preferred.
2. Ramp or Blended Transition. A ramp or blended transition shall be used to lower or raise the sidewalk to connect with the street or highway.
3. Turning Space. A turning space shall be provided at the top of a perpendicular ramp, bottom of a parallel ramp, or where the pedestrian travel requires a change in direction. A common turning space may be shared by adjacent ramps. The turning space shall have a minimum clear dimension of 4 ft x 4 ft. Where the turning space is constrained at the back of the sidewalk by a curb, retaining wall, building, or feature over 2 inches in height, the minimum clear dimension shall be 4 ft x 5 ft, with the 5-ft dimension in the direction of the ramp running slope.
4. Flared Side. A flared side shall be used adjacent to a walkable surface. A flared side may be used adjacent to a non-walkable surface. A flared side shall have a maximum slope of 10.00% measured parallel to the back of the curb.
5. Return Curb. A return curb is placed perpendicular to the roadway curb. A return curb may be used adjacent to a non-walkable surface. A return curb shall not be used adjacent to a walkable surface. The return curb may be omitted where the non-walkable surface is flared and the curb adjacent the roadway is tapered to meet the flush curb at the bottom of the ramp.
6. Clear Space. A clear space shall be provided beyond the bottom grade break of a curb ramp wholly contained within the crosswalk and wholly outside the parallel vehicular travel path. The clear space shall have a minimum clear dimension of 4 ft x 4 ft.
7. Detectable Warning Surface. A detectable warning surface shall consist of truncated domes and be placed at each street, highway, or railroad crossing. The detectable warning surface shall extend a minimum of 2 ft in the direction of pedestrian travel and be placed the entire width of a ramp, blended transition, or turning space.
8. Running Slope. The running slope of a ramp, blended transition, or turning space shall be measured parallel to the direction of pedestrian travel.
   a. A running slope of 2.00% or less is considered level.
   b. A ramp shall have a maximum running slope of 8.33% but shall not require a ramp length to exceed 15 ft.
   c. A blended transition shall have a maximum running slope of 5.00%.
   d. A turning space shall have a maximum running slope of 2.00%.
9. Width. Unless otherwise noted, minimum width of a ramp, blended transition, or turning space, excluding flared sides or return curb, shall be 4 ft.
10. Grade Break. A grade break at the top and bottom of a ramp, blended transition, or turning space shall be perpendicular to the running slope. Grade breaks shall not be within the ramp, blended transition, turning space, or detectable warning surface. Grade breaks shall be flush. Vertical discontinuities shall not be greater than 1/2 in. Where a discontinuity is greater than 1/4 in. the surface shall be beveled with a slope not steeper than 1V:2H.
11. Cross Slope Exceptions. The cross slope of a ramp, blended transition, or turning space shall be measured perpendicular to the direction of pedestrian travel.
    a. The maximum cross slope at a pedestrian street crossing without posted yield or stop control shall be 5.00%.
    b. The maximum cross slope at a pedestrian street crossing with posted yield or stop control shall be 2.00%.
    c. The maximum cross slope at a midblock crossing shall be the established grade of the adjacent roadway.
12. Counter Slope. A counter slope is the cross slope of the gutter or street adjacent the running slope of the ramp, blended transition, or turning space. See Standard Drawing E 604-SWCR-14 for counter slope details.
13. Objects such as a utility cover, vault frame, and grating shall be placed outside the curb ramp.
14. Curb ramps shall be placed within the marked crosswalk area.
15. Drainage inlets should be located uphill from a curb ramp to prevent ponding in the path of pedestrian travel.

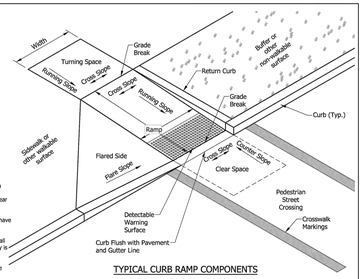

TYPICAL CURB RAMP COMPONENTS

INDIANA DEPARTMENT OF TRANSPORTATION	
CURB RAMP DRAWING INDEX AND GENERAL NOTES SEPTEMBER 2018	
STANDARD DRAWING NO.	E 604-SWCR-01
/s/ Elizabeth W. Phillips DESIGN STANDARDS ENGINEER	03/20/18 DATE
/s/ John Leckie CHIEF ENGINEER	04/25/18 DATE

ELIZABETH W. PHILLIPS REGISTERED No. 10200124 STATE OF INDIANA PROFESSIONAL ENGINEER

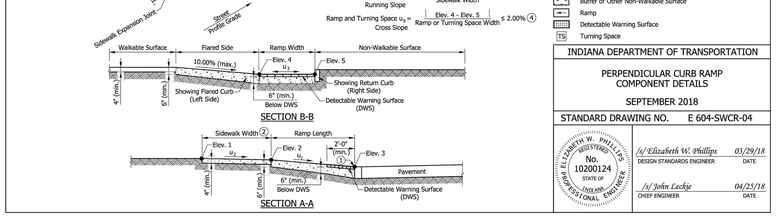

Component Slope Equations:

Ramp u_1 = Elev. 2 − Elev. 3 / Ramp Length ≤ 8.33%

Turning Space u_2 = Elev. 1 − Elev. 2 / Sidewalk Width ≤ 2.00%

Ramp and Turning Space u_3 = Elev. 4 − Elev. 5 / Ramp or Turning Space Width ≤ 2.00% ④

SECTION B-B

SECTION A-A

NOTES:

1. The bottom edge of the ramp and top of curb shall be flush with the edge of adjacent pavement and gutter line.
2. The turning space shall have a minimum clear dimension of 4 ft x 4 ft. Where the turning space is constrained at the back of the sidewalk, the minimum clear dimension shall be 4 ft x 5 ft, with the 5-ft dimension in the direction of the ramp running slope. Where a tiered perpendicular curb ramp is used, a constrained turning space shall have a minimum clear dimension of 5 ft x 5 ft.
3. Curb ramp surface shall be coarse broomed transverse to the running slope.
4. See Standard Drawing E 604-SWCR-01 for cross slope exceptions.
5. See Standard Drawing E 604-SWCR-12, -13, and -14 for Detectable Warning Surface placement, configuration, and details.
6. See Standard Drawing E 604-CCSJ-01 for sidewalk expansion joint details.

LEGEND:

- Buffer or Other Non-Walkable Surface
- Ramp
- Detectable Warning Surface
- TS Turning Space

INDIANA DEPARTMENT OF TRANSPORTATION	
PERPENDICULAR CURB RAMP COMPONENT DETAILS SEPTEMBER 2018	
STANDARD DRAWING NO.	E 604-SWCR-04
/s/ Elizabeth W. Phillips DESIGN STANDARDS ENGINEER	03/29/18 DATE
/s/ John Leckie CHIEF ENGINEER	04/25/18 DATE

ELIZABETH W. PHILLIPS REGISTERED No. 10200124 STATE OF INDIANA PROFESSIONAL ENGINEER

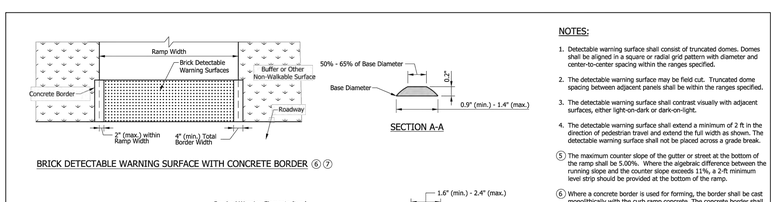

SECTION A-A

BRICK DETECTABLE WARNING SURFACE WITH CONCRETE BORDER ⑥ ⑦

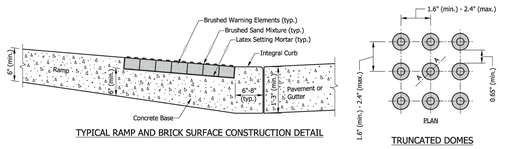

TYPICAL RAMP AND BRICK SURFACE CONSTRUCTION DETAIL

TRUNCATED DOMES

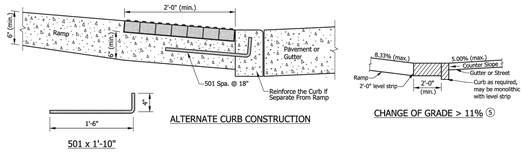

ALTERNATE CURB CONSTRUCTION

CHANGE OF GRADE > 11% ⑤

NOTES:

1. Detectable warning surface shall consist of truncated domes. Domes shall be aligned in a square or radial grid pattern with diameter and center-to-center spacing within the ranges specified.
2. The detectable warning surface may be field cut. Truncated dome spacing between adjacent panels shall be within the ranges specified.
3. The detectable warning surface shall contrast visually with adjacent surfaces, either light-on-dark or dark-on-light.
4. The detectable warning surface shall extend a minimum of 2 ft in the direction of pedestrian travel and extend the full width as shown. The detectable warning surface shall not be placed across a grade break.
5. The maximum counter slope of the gutter or street at the bottom of the ramp shall be 5.00%. Where the algebraic difference between the running slope and the counter slope exceeds 11%, a 2-ft minimum level strip should be provided at the bottom of the ramp.
6. Where a concrete border is used for forming, the border shall be cast monolithically with the curb ramp concrete. The concrete border shall not reduce the ramp width by more than 2 in. on each side.
7. Where forming other than a concrete border is used, the edge restraint shall not encroach upon the ramp width.

INDIANA DEPARTMENT OF TRANSPORTATION	
DETECTABLE WARNING SURFACE DETAILS SEPTEMBER 2018	
STANDARD DRAWING NO.	E 604-SWCR-14
/s/ Elizabeth W. Phillips DESIGN STANDARDS ENGINEER	03/29/18 DATE
/s/ John Leckie CHIEF ENGINEER	04/25/18 DATE

ELIZABETH W. PHILLIPS REGISTERED No. 10200124 STATE OF INDIANA PROFESSIONAL ENGINEER

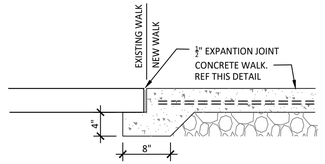

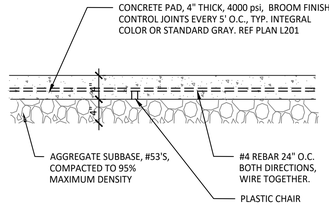

NOTE:
1. SEAL CONCRETE IMMEDIATELY WITH ASTM C309 TYPE 1 CLASS A COMPLIANT SEALER AFTER BROOM FINISH

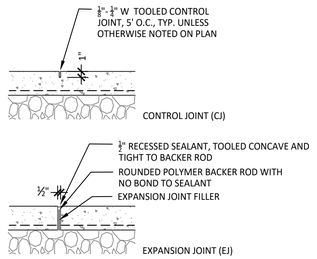

CONCRETE
E DETAIL
SCALE: 1"=1'-0"

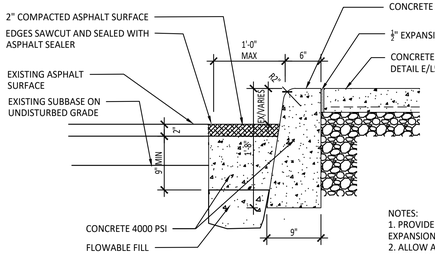

NOTES:
1. PROVIDE CONTROL JOINTS EVERY 10' O.C., EXPANSION JOINTS EVERY 40' O.C., TYP.
2. ALLOW ADEQUATE CURE TIME BEFORE PERMITTING TRAFFIC ON CONCRETE
3. ALLOW ADEQUATE CURE TIME BEFORE PLACING COMPACTED ASPHALT SURFACE ON CONCRETE.
4. CONTRACTOR SHALL FOLLOW ALL MUTCD GUIDELINES.

CONCRETE CURB WITH ASPHALT PATCH
D DETAIL
SCALE: 1"=1'-0"

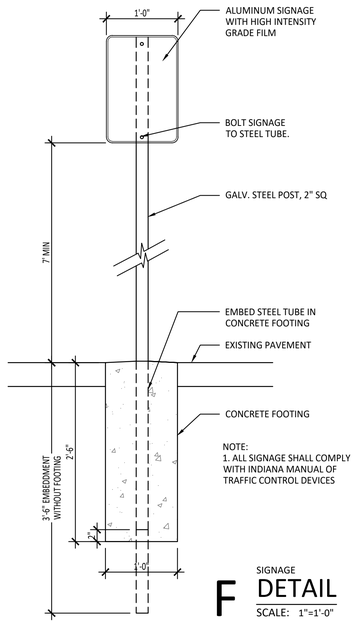

NOTE:
1. ALL SIGNAGE SHALL COMPLY WITH INDIANA MANUAL OF TRAFFIC CONTROL DEVICES

SIGNAGE
F DETAIL
SCALE: 1"=1'-0"

TYP INDOT RAMP
G DETAIL
SCALE: NTS

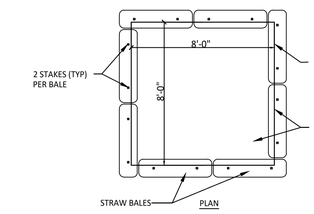

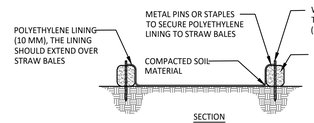

CONCRETE WASHOUT
C DETAIL
SCALE: NTS

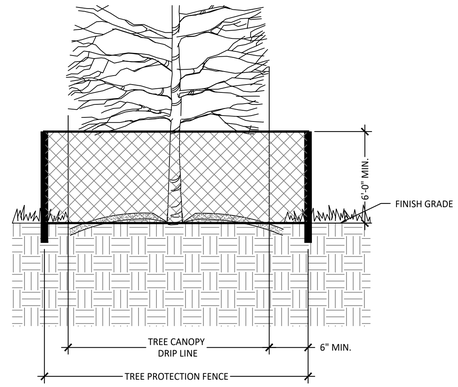

GENERAL NOTES

1. INSTALL FENCE IN ACCORDANCE WITH REQUIREMENTS OF SECTION 015626 - TEMPORARY FENCING.
2. INSTALL IN LOCATIONS SHOWN ON PLANS.
3. INSPECT SITE WITH OWNER'S REPRESENTATIVE TO DETERMINE FINAL LOCATIONS.

TREE PROTECTION FENCING
B DETAIL
SCALE: NTS

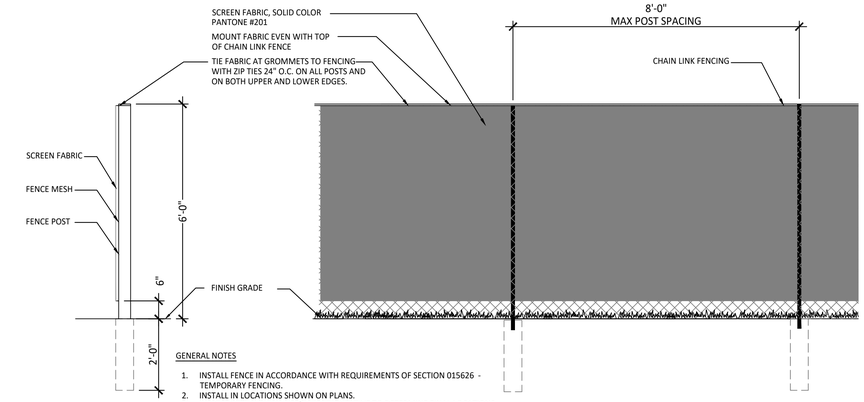

GENERAL NOTES

1. INSTALL FENCE IN ACCORDANCE WITH REQUIREMENTS OF SECTION 015626 - TEMPORARY FENCING.
2. INSTALL IN LOCATIONS SHOWN ON PLANS.
3. INSPECT SITE WITH OWNER'S REPRESENTATIVE TO DETERMINE FINAL LOCATIONS.
4. PROVIDE HALF MOON VENTS 4' O.C. MIN, TWO ROWS.
5. SCREEN SHALL BE MINIMUM 80% PRIVACY, KNITTED HDPE UV POLYETHYLENE OR PVC CONSTRUCTION
6. PLEASE CONTACT IU SIGN WHOP FOR ADDITIONAL CONSTRUCTION NEEDS: 812-856-0761

CONSTRUCTION FENCING
A DETAIL
SCALE: NTS

springpoint ARCHITECTS, llc
522 W. 2nd STREET
BLOOMINGTON, INDIANA 47403
812.318.2930
www.springpointarchitects.com

REED & SONS CONSTRUCTION 812-824-5237 — **Field Set** 05/20/2024

certified

CHRISTINA A KRAEGER REGISTERED No. LA21600003 INDIANA LANDSCAPE ARCHITECT 02.27.24

project title

INDIANA UNIVERSITY #20230509
BL044 Mc CALLA
REPAIR RETAINING WALL ALONG 9TH

BLOOMINGTON, INDIANA

525 E. 9th STREET

project information

PROJECT NUMBER:	23-45
ISSUE DATE:	100% CD 02.27.24
REVISION DATE:	--
DRAWN BY:	CK
CHECKED BY:	DG

sheet title

DETAILS

sheet number

L.502

24-0009 MCCALLA RETAINING WALL FIELD SET - 05/20/2024

REGISTER OF PAYROLL CLAIMS

Board: Board of Public Works Claim Register

Date:	Type of Claim	FUND	Description	Bank Transfer	Amount
7/26/2024	Payroll				587,966.52
					587,966.52

ALLOWANCE OF CLAIMS

We have examined the claims listed on the foregoing register of claims, consisting of **1** claim, and except for the claims not allowed as shown on the register, such claims are hereby allowed in the total amount of **$ 587,966.52**

Dated this 30th day of July year of 2024.

Kyla Cox Deckard, President	Elizabeth Karon, Vice President	James Roach, Secretary

I hereby certify that each of the above listed voucher(s) or bill(s) is (are) true and correct and I have audited same in accordance with IC 5-11-10-1.6.

Fiscal Officer_____

City of Bloomington
Public Works Department

Sidewalk, Alley Closure and Metered Parking Lane Reservation Request from F.A. Wilhelm adjacent to 400 E. 7th St will be available for the 07/30/2024 Board of Public Works Meeting

401 N. Morton Street • Bloomington, IN 47404 City Hall Phone: (812) 349-3410 • Fax: (812) 349-3520
www.bloomington.in.gov
e-mail: public.works@bloomington.in.gov

Board of Public Works
Staff Report

Project/Event:	Posh Hotel
Staff Representative:	Kyle Baugh
Petitioner/Representative:	Tom Ritman
Date:	July 30th, 2024

Report: Gilliatte General Contractors is requesting metered parking lane reservations and a pedestrian diversion on S Washington St adjacent to 200 E Kirkwood (5/3 Bank site). They are also requesting a one week alley closure in the east west alley on the south side of the property. This request is to accommodate material storage and construction activates for Posh hotel. The pedestrian diversion and meter parking lane reservation would be in place from August 1st, 2024 to June 24th, 2024. The alley closure would be in place from August 13th, 2024 to August 20th, 2024.

Gilliatte General Contractors has supplied maintenance of traffic plans for all work.

Figure 6H-28. Sidewalk Detour or Diversion (TA-28)

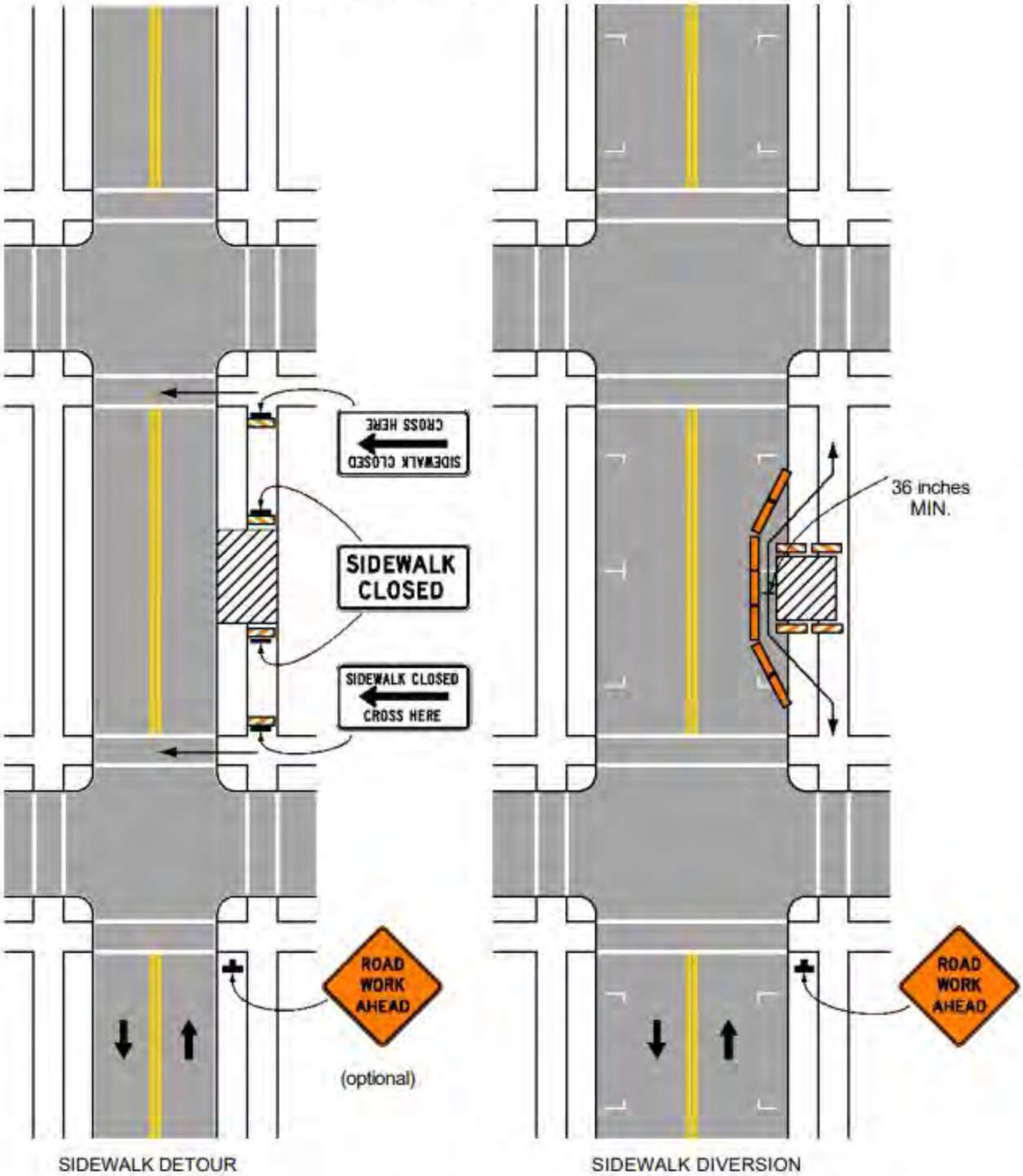

Typical Application 28

Board of Public Works
Staff Report

Project/Event:	Gateway Phase 1 Right-of-Way Closures
Staff Representative:	Alex Gray
Petitioner/Representative:	Mike Brinson, Reed & Sons Construction
Date:	July 30th, 2024

Report: Reed & Sons is working with the Parks Department for the installation of the Gateway Phase 1 project between N College Ave and N Walnut St in Miller Showers Park. The project will include periodic lane closures on N College Ave and N Walnut St for material and equipment unloading as well as a road closure of the cut thru segment of SR Old 37 that runs between N College Ave and N Walnut St. Sidewalk closures will also be a part of the project, but will be contained to within Miller Showers park with detours being provided for the closed routes. The project is anticipated to start on August 5th, 2024, and be completed by November 15th, 2024.

DETOUR
DETOUR
DETOUR
SIDEWALK CLOSED
DETOUR
SIDEWALK CLOSED
SIDEWALK CLOSED
DETOUR
DETOUR
DETOUR
DETOUR
DETOUR
DETOUR
DETOUR
DETOUR

Kinser Pike
45
DETOUR
Holiday Inn Bloomington...
Clean Machine Self Services Car Wsh
Hampton Inn Bloomington
W Gourley Pike
N Dunn St
VERVE Bloomington
W Brookdale Dr
W Riley Dr
La Charreada
La Bonita Restaurant & Market
N Kinser Pike
N Walnut St
E 19th St
Enterprise Rent-A-Car
Showers Park
W 17th St
Smokin' Jack's Rib Shack
ROAD CLOSED

AIA® Document G709™ – 2018

Proposal Request

PROJECT: *(name and address)* Bloomington Gateways Phase 1 Miller Showers Park, 1500 N College Avenue, Bloomington, IN 47404	CONTRACT INFORMATION: Contract For: General Construction Date: August 03, 2023	Architect's Project Number: 2022-1663 Proposal Request Number: 001 Proposal Request Date: May 01, 2024
OWNER: *(name and address)* City of Bloomington, Parks and Recreation 401 N Morton Street, Suite 205, Bloomington, IN 47404	ARCHITECT: *(name and address)* Rundell Ernstberger Associates, Inc. 618 E Market Street, Indianapolis, IN 46202	CONTRACTOR: *(name and address)* Reed & Sons Construction, Inc. 299 W Moorman Road, Bloomington, IN 47403

The Owner requests an itemized proposal for changes to the Contract Sum and Contract Time for proposed modifications to the Contract Documents described herein. The Contractor shall submit this proposal within fourteen (14) days or notify the Architect in writing of the anticipated date of submission.

(Insert a detailed description of the proposed modifications to the Contract Documents and, if applicable, attach or reference specific exhibits.)

Please provide a proposed credit for the subtraction of all the sitework, landscaping, foundations, etc. associated with the original monument design. Also provide proposed pricing for the additon of the proposed sitework, landscapeing, foundations, etc. associated with the revised monument design as illustrated in the attached drawings.

Attachments:
G001
LA101
LA201
LA202
LA203
LA204
LA205
LA206
LA207
LA208
LA501
LA503
E201
E601

THIS IS NOT A CHANGE ORDER, A CONSTRUCTION CHANGE DIRECTIVE, OR A DIRECTION TO PROCEED WITH THE WORK DESCRIBED IN THE PROPOSED MODIFICATIONS.

REQUESTED BY THE ARCHITECT:

Kevin Sweetland, Associate
PRINTED NAME AND TITLE

AIA Document G709 – 2018. Copyright © 1993, 2001 and 2018. All rights reserved. "The American Institute of Architects," "American Institute of Architects," "AIA," the AIA Logo, and "AIA Contract Documents" are trademarks of The American Institute of Architects. This document was produced at 10:05:40 ET on 05/01/2024 under Order No.2114457605 which expires on 08/16/2024, is not for resale, is licensed for one-time use only, and may only be used in accordance with the AIA Contract Documents® Terms of Service. To report copyright violations, e-mail docinfo@aiacontracts.com.
User Notes: (3B9ADA40)

City of Bloomington, Indiana

BLOOMINGTON GATEWAYS PHASE 1

BID SET CONSTRUCTION DOCUMENTS
June 7, 2023

Project No. 2022-1663

Prepared for:
CITY OF BLOOMINGTON,
PARKS AND RECREATION
Tim Street, Director

401 N Morton Street, Suite 250 | Bloomington, IN 47404
p: (812) 349-3711 e: tim.street@bloomington.in.gov

Project Location:
NORTH GATEWAY

Miller Showers Park
1500 N. College Ave. | Bloomington, IN 47404

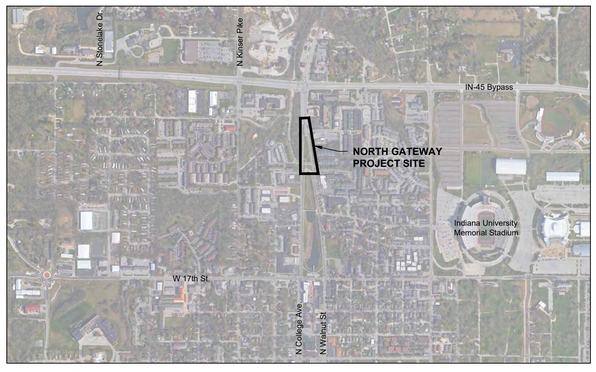

VICINITY PLAN

CONCEPTUAL RENDERING

1 PR

SHEET INDEX

GENERAL

G001	Cover
1 of 1	Topographic Survey
G101	Construction Staging Plan

SITE

LA101	Site Demolition Plan
LA201	Site Keynote Plan
LA202	Site Keynote Enlargement Plan
LA203	Site Layout Plan
LA204	Site Layout Enlargement Plan
LA205	Site Grading Plan
LA206	Site Grading Enlargement Plan
LA207	Planting Plan
LA208	Planting Schedule & Details
LA501	Site Details
LA502	Site Details
LA503	Site Details

STRUCTURAL

S000	Structural Notes
S100	Not Used

ELECTRICAL

E201	Electrical Site Plan
E601	Electrical Riber Diagram & Schedules
E701	Electrical Details & Symbols

1 PR

Indiana 811
Know what's below. Call before you dig.

ALL UTILITIES SHOWN ON THESE PLANS ARE APPROXIMATE. INDIVIDUAL SERVICE LINES ARE NOT SHOWN. PRIOR TO ANY EXCAVATION, IT SHALL BE THE RESPONSIBILITY OF THE CONTRACTOR TO CONTACT THE INDIANA UNDERGROUND PLANT PROTECTION SERVICES, INC. (WWW.INDIANA811.ORG, 1-800-382-5544.) THIS SERVICE WAS ESTABLISHED TO PROVIDE ACCURATE LOCATIONS OF BELOW GROUND LINES. THE CONTRACTOR OR SUBCONTRACTOR SHALL NOTIFY THE UTILITY PROTECTION CENTER 48 HOURS IN ADVANCE OF ANY CONSTRUCTION ON THIS PROJECT.

Prepared By:
LEAD DESIGNER / LANDSCAPE ARCHITECT
RUNDELL ERNSTBERGER ASSOCIATES
URBAN DESIGN / PLANNING / LANDSCAPE ARCHITECTURE
618 E MARKET STREET / INDIANAPOLIS, IN 46202
P: 317.263.0127 / REASITE.COM

TOPOGRAPHIC SURVEY
Bledsoe Rigger Cooper James
1351 W Tapp Road
Bloomington, IN 47403
p: (812) 336-8277
www.brcjcivil.com

ELECTRICAL ENGINEER
The Engineering Collaborative
2410 Executive Dr. #100,
Indianapolis, IN 46241
p: (317) 636-3941
www.tec-mep.com

STRUCTURAL ENGINEER
LYNCH HARRISON & BRUMLEVE, INC.
550 VIRGINIA AVENUE,
Indianapolis, IN 46203
p: (317) 423-1550
www.lhb-eng.com

PREPARED BY:
RUNDELL ERNSTBERGER ASSOCIATES
URBAN DESIGN / PLANNING / LANDSCAPE ARCHITECTURE
618 EAST MARKET STREET / INDIANAPOLIS, INDIANA 46202
P 317.263.0127 / REASITE.COM

PREPARED FOR:
CITY OF BLOOMINGTON
TIM STREET - DIRECTOR
CITY OF BLOOMINGTON, PARKS AND RECREATION
401 N MORTON ST, SUITE 250, BLOOMINGTON, IN 47404
P 812-349-3711 | tim.street@bloomington.in.gov

CONSULTANT:

PROJECT:
BLOOMINGTON GATEWAYS PHASE 1
BLOOMINGTON, INDIANA
BID SET
CONSTRUCTION DOCUMENTS

REVISIONS:

NO.	BY	DESCRIPTION	DATE
1 PR	KS	PROPOSAL REQUEST 001	05-01-2024

THE DRAWINGS, SPECIFICATIONS AND OTHER DOCUMENTS, INCLUDING THOSE IN ELECTRONIC FORM PREPARED BY REA FOR THIS PROJECT ARE INSTRUMENTS OF SERVICE, AND MAY BE USED SOLELY WITH RESPECT TO THIS PROJECT. THE DOCUMENTS MAY NOT BE REPRODUCED OR MODIFIED BY A THIRD PARTY WITHOUT FIRST OBTAINING THE EXPRESS WRITTEN CONSENT OF REA. AUTHORIZED USE OF ELECTRONIC MEDIA OR FILE DOES NOT GUARANTEE THAT THESE FILES CONTAIN COMPLETE AND ACCURATE INFORMATION. IN ORDER TO INSURE THE ACCURACY OF THE INFORMATION CONTAINED AND THAT NO CHANGES OR MODIFICATIONS HAVE BEEN MADE, THESE FILES MUST BE COMPARED TO THE PROJECT'S CONTRACT DOCUMENTS WITH STAMPED AND SEALED CERTIFICATION AND APPLICABLE APPROVED MODIFICATIONS.

DRAWING NAME:
COVER

CERTIFICATION:
CECIL P. PENLAND III
REGISTERED
No. 21200004
STATE OF
INDIANA
LANDSCAPE ARCHITECT

REA PROJECT #:	2022-1663
DATE:	06/07/23
DRAWN BY:	KS
REVIEWED BY:	JMM

DRAWING:
G001

© COPYRIGHT RUNDELL ERNSTBERGER ASSOCIATES, INC.

FILE: P:\1663 Bloomington Gateways Phase 1\dwg\CD\revised - Original CD\sheets\G001 - Cover

DEMOLITION SYMBOLS:

IP — PROVIDE TEMPORARY DROP INLET PROTECTION AT INLETS LOCATED DOWNSTREAM OF CONSTRUCTION ACTIVITY. COMMERCIAL WOVEN FABRIC SILT BAG (DANDY BAG OR EQUIVALENT) PLACED OVER INLET OPENING AND SECURED TO CASTING INSERT OR FRAME. CONTRACTOR SHALL INSPECT DAILY AND IMMEDIATELY MAKE NEEDED REPAIRS. REMOVE SEDIMENT FROM AREA TO PROVIDE STORAGE FOR THE NEXT STORM EVENT.

W.O. — CONCRETE CONTRACTOR SHALL PROVIDE SELF-CONTAINED, PREFABRICATED WASHOUT SYSTEM WITH 10 MIL. PLASTIC OR VINYL LINING. WASHOUT SYSTEM SHALL BE PLACED 50FT AWAY FROM ANY EXISTING DRAIN INLET. INSPECT DAILY AND AFTER STORM EVENTS. MAINTAIN ACCORDING TO MANUFACTURER'S INSTRUCTIONS.

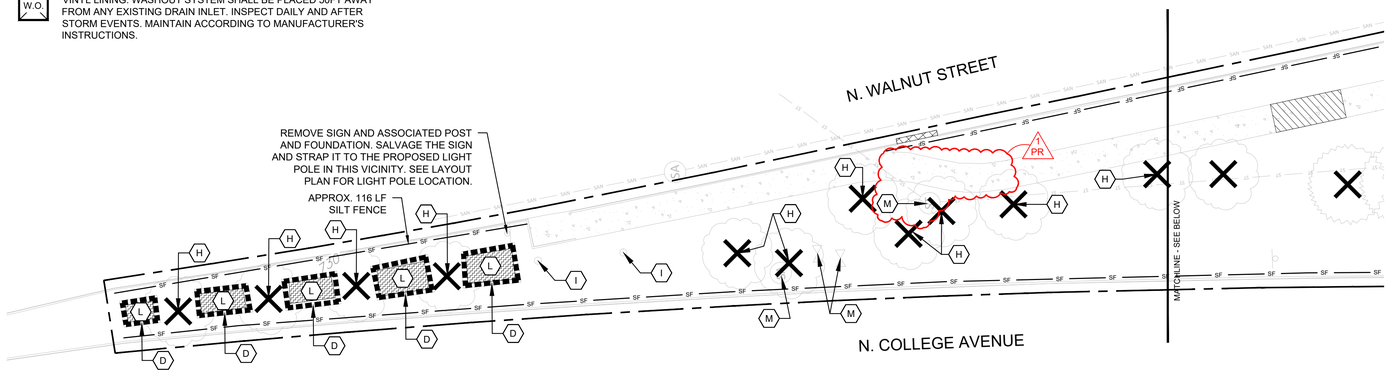

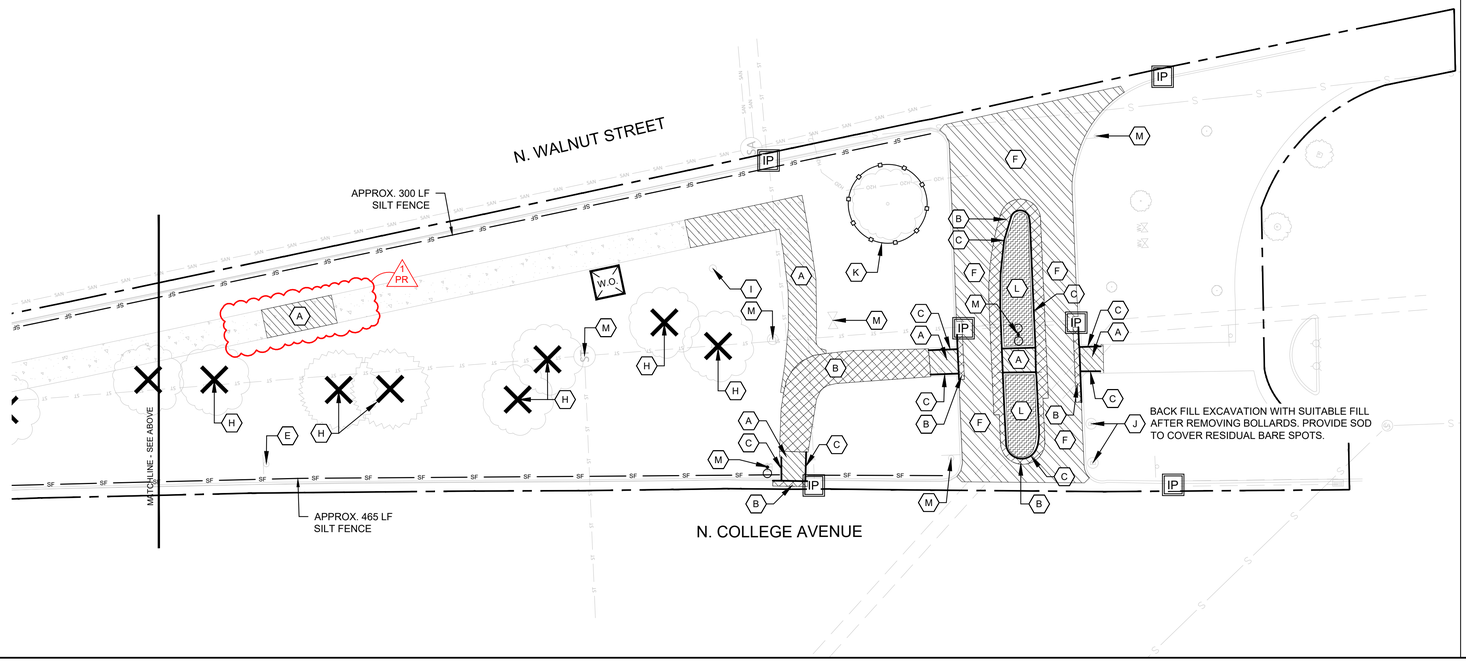

DEMOLITION NOTES:

1. CONTRACTORS SHALL MAKE THEMSELVES FAMILIAR WITH THE CONDITIONS OF THE SURVEY AND OF THE CURRENT EXISTING CONDITIONS.
2. THE CONTRACTOR SHALL IMMEDIATELY REPORT TO THE LANDSCAPE ARCHITECT / OWNER ANY DISCREPANCIES BETWEEN THE EXISTING CONDITIONS SHOWN ON THESE PLANS AND ACTUAL FIELD CONDITIONS. RUNDELL ERNSTBERGER ASSOCIATES, INC. IS NOT RESPONSIBLE FOR THE ACCURACY OF THE SURVEY INFORMATION OR FIELD-LOCATED EXISTING CONDITIONS.
3. THE CONTRACTOR SHALL PROTECT ALL SITE ELEMENTS INDICATED TO REMAIN DURING CONSTRUCTION. THE CONTRACTOR SHALL BE RESPONSIBLE FOR REPAIRING OR REPLACING ALL ITEMS DAMAGED FROM CONSTRUCTION ACTIVITY.
4. PROTECT ALL EXISTING UTILITIES NOT INDICATED TO BE REMOVED OR ADJUSTED. UNDERGROUND UTILITIES, IF SHOWN, ARE BASED ON ABOVE GROUND INDICATIONS AND CONSTRUCTION DRAWINGS ON FILE AT THE APPROPRIATE UTILITY. THERE IS NO GUARANTEE THAT ALL UNDERGROUND UTILITIES ARE SHOWN AS ACCURATELY AS POSSIBLE BUT MAY NOT BE EXACT. NO PHYSICAL UNDERGROUND UTILITY LOCATIONS WERE VERIFIED.
5. THE CONTRACTOR SHALL COORDINATE ALL WORK WITH THE AFFECTED UTILITIES PRIOR TO THE START OF CONSTRUCTION.
6. THE CONTRACTOR SHALL SMOOTHLY SAW CUT EXISTING PAVEMENTS TO BE REMOVED FROM PAVEMENTS TO REMAIN. ALL SAW CUTS SHALL BE TO THE NEAREST JOINT. PAVEMENTS TO REMAIN SHALL BE PROTECTED OR FURTHER REMOVED AS CONSTRUCTION PROGRESSES TO PROVIDE A CLEAN TRANSITION BETWEEN EXISTING AND PROPOSED WORK OF THIS CONTRACT. REFER TO PLANS FOR APPROXIMATE SAW CUT LOCATIONS RELATING TO EXISTING JOINTING.
7. EVERY EFFORT SHALL BE MADE BY THE CONTRACTOR TO PROTECT EXISTING TREES TO REMAIN. THIS EFFORT SHALL INCLUDE, BUT IS NOT LIMITED TO, INSTALLING TREE PROTECTION FENCE AROUND THE TREES WITHIN THE AREAS OF CONSTRUCTION ACTIVITY. ALSO REFRAIN FROM PARKING OR MOVING ANY VEHICLES OR EQUIPMENT WITHIN THE DRIP LINE OF THE TREES INDICATED TO BE PROTECTED.
8. EVERY EFFORT SHALL BE MADE BY THE CONTRACTOR TO SECURE THE CONSTRUCTION SITE AND LIMIT PEDESTRIAN ACCESS INTO DISTURBED AREAS. THIS EFFORT SHALL INCLUDE, BUT IS NOT LIMITED TO, INSTALLING FENCING TO ENCLOSE THE AREAS OF CONSTRUCTION ACTIVITY AND ERECTING TEMPORARY PEDESTRIAN TRAFFIC SIGNAGE.
9. TEMPORARY CONSTRUCTION FENCE POST MAY NOT BE DRILLED INTO EXISTING PAVEMENTS TO REMAIN. CONTRACTOR SHALL USE TEMPORARY FENCE SPREAD FOOTERS WITH SAND BAGS IF NECESSARY.
10. THE CONTRACTOR SHALL COORDINATE AND BE RESPONSIBLE FOR THE STAGING AND REMOVAL OF ALL DEMOLITION ITEMS. UNSUITABLE MATERIALS AND FILL ARE TO BE LEGALLY REMOVED FROM THE SITE.
11. EROSION CONTROL MEATURES (I.E. SILT FENCING, SEDIMENT CONTROL, AND INLET PROTECTION) SHALL BE PROVIDED BY THE CONTRACTOR.
12. ALL WORK SHALL BE PERFORMED BY THE CONTRACTOR UNLESS OTHERWISE NOTED.
13. ALL WORK SHALL BE COORDINATED AND IN COMPLIANCE WITH STATE AND LOCAL MUNICIPALITIES AS WARRANTED.
14. STRIP AND STOCKPILE SUITABLE TOPSOIL FOR RE-DISTRIBUTION IN PROPOSED LAWN AND PLANT BED AREAS WHEN POSSIBLE. FOLLOW REQUIREMENTS OF SPECIFICATIONS FOR SOIL STOCKPILING, TESTING, AND AMENDING.

DEMOLITION KEYNOTES:

A — FULL-DEPTH SAW CUT AND REMOVAL OF CONCRETE PAVEMENT AND SUB-BASE IN THEIR ENTIRETY TO NATURAL SUBGRADE. CLEANLY SAW CUT AT EXISTING CONTROL JOINT.

B — FULL-DEPTH SAW CUT AND REMOVAL OF ASPHALT PAVEMENT AND SUB-BASE IN THEIR ENTIRETY TO NATURAL SUBGRADE.

C — FULL-DEPTH REMOVAL OF CONCRETE BARRIER CURB. REMOVE SUB-BASE AS NEEDED TO INSTALL PROPOSED IMPROVEMENTS.

D — REMOVE STACKED STONE WALL AND ANY ASSOCIATED FOOTINGS IN THEIR ENTIRETY.

E — SALVAGE SIGN PANEL AND RETURN TO OWNER. COORDINATE DELIVERY TO OWNER'S STORAGE FACILITY. REMOVE POLE AND CONCRETE BASE IN ITS ENTIRETY. BACKFILL EXCAVATION WITH SUITABLE FILL MATERIAL.

F — MILL ASPHALT PAVEMENT 2" TO RECEIVE ASPHALT OVERLAY.

G — NOT USED

H — TREE TO BE REMOVED. GRUB AND REMOVE STUMP AND ROOTS MIN. 24" BELOW PROPOSED FINISHED GRADE.

I — GRUB AND REMOVE STUMP AND ROOTS MIN. 24" BELOW PROPOSED FINISHED GRADE.

J — REMOVE EXISTING BOLLARD AND ASSOCIATED FOUNDATION IN THEIR ENTIRETY.

K — EXISTING TREE TO REMAIN. PROTECT FROM DAMAGE. PROVIDE TREE PROTECTION FENCE. SEE DETAIL 1/LA502.

L — GRUB AND REMOVE EXISTING VEGETATION TO DEPTH NECESSARY TO INSTALL IMPROVEMENTS. STOCKPILE TOPSOIL AS NECESSARY FOR USE AS FILL IN LAWN AREAS.

M — PROTECT ALL STREET SIGNS, CASTINGS, AND UTILITIES INDICATED TO REMAIN (STORM, SANITARY, ELECTRIC, GAS, FIBER, ETC.). REPLACE OR RESET CASTINGS AND AS REQUIRED TO MEET PROPOSED FINISH GRADE AS INDICATED BY THE GRADING PLAN.

PREPARED BY:
RUNDELL ERNSTBERGER ASSOCIATES
URBAN DESIGN / PLANNING / LANDSCAPE ARCHITECTURE
618 EAST MARKET STREET / INDIANAPOLIS, INDIANA 46202
P 317.263.0127 / REASITE.COM

PREPARED FOR:
CITY OF BLOOMINGTON
TIM STREET - DIRECTOR
CITY OF BLOOMINGTON, PARKS AND RECREATION
401 N MORTON ST, SUITE 250, BLOOMINGTON, IN 47404
P 812-349-3711 | tim.street@bloomington.in.gov

CONSULTANT:

PROJECT:

BLOOMINGTON GATEWAYS PHASE 1

BLOOMINGTON, INDIANA
BID SET
CONSTRUCTION DOCUMENTS

NORTH
0' 10' 20' 40'
SCALE: 1" = 20'

REVISIONS:

NO.	BY	DESCRIPTION	DATE
1 PR	KS	PROPOSAL REQUEST 001	05-01-2024

THE DRAWINGS, SPECIFICATIONS AND OTHER DOCUMENTS, INCLUDING THOSE IN ELECTRONIC FORM PREPARED BY REA FOR THIS PROJECT ARE INSTRUMENTS OF SERVICE, AND MAY BE USED SOLELY WITH RESPECT TO THIS PROJECT. THE DOCUMENTS MAY NOT BE REPRODUCED OR MODIFIED BY A THIRD PARTY WITHOUT FIRST OBTAINING THE EXPRESS WRITTEN CONSENT OF REA. AUTHORIZED USE OF ELECTRONIC MEDIA OR FILE DOES NOT GUARANTEE THAT THESE FILES CONTAIN COMPLETE AND ACCURATE INFORMATION. IN ORDER TO INSURE THE ACCURACY OF THE INFORMATION CONTAINED AND THAT NO CHANGES OR MODIFICATIONS HAVE BEEN MADE, THESE FILES MUST BE COMPARED TO THE PROJECT'S CONTRACT DOCUMENTS WITH STAMPED AND SEALED CERTIFICATION AND APPLICABLE APPROVED MODIFICATIONS.

DRAWING NAME:

SITE DEMOLITION PLAN

CERTIFICATION:

CECIL P. PENLAND III — REGISTERED — No. 21200004 — STATE OF INDIANA — LANDSCAPE ARCHITECT

REA PROJECT #:	2022-1663
DATE:	06/07/23
DRAWN BY:	KS
REVIEWED BY:	JMM

DRAWING:

LA101

© COPYRIGHT RUNDELL ERNSTBERGER ASSOCIATES, INC.

FILE: P:\1663 Bloomington Gateways Phase 1\dwg\CD\revised - Original CD\sheets\LA101 - Site Demo Plan

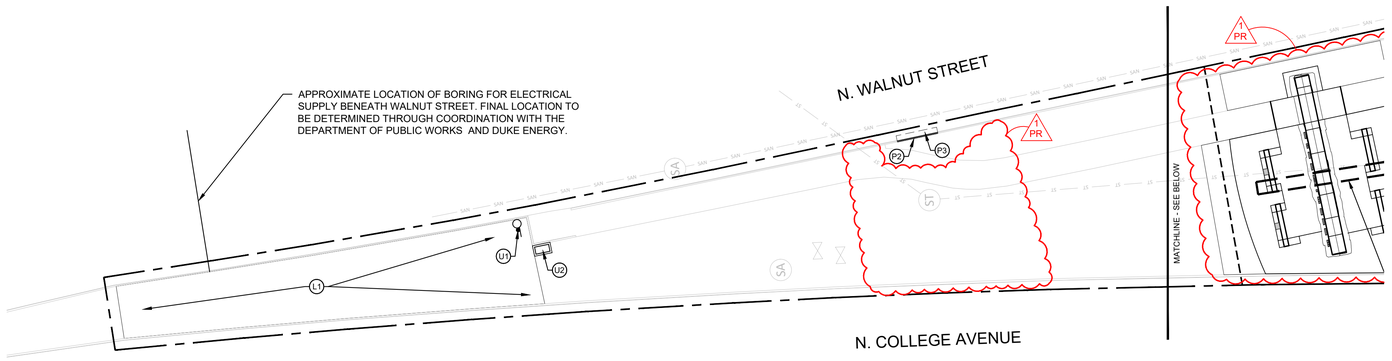

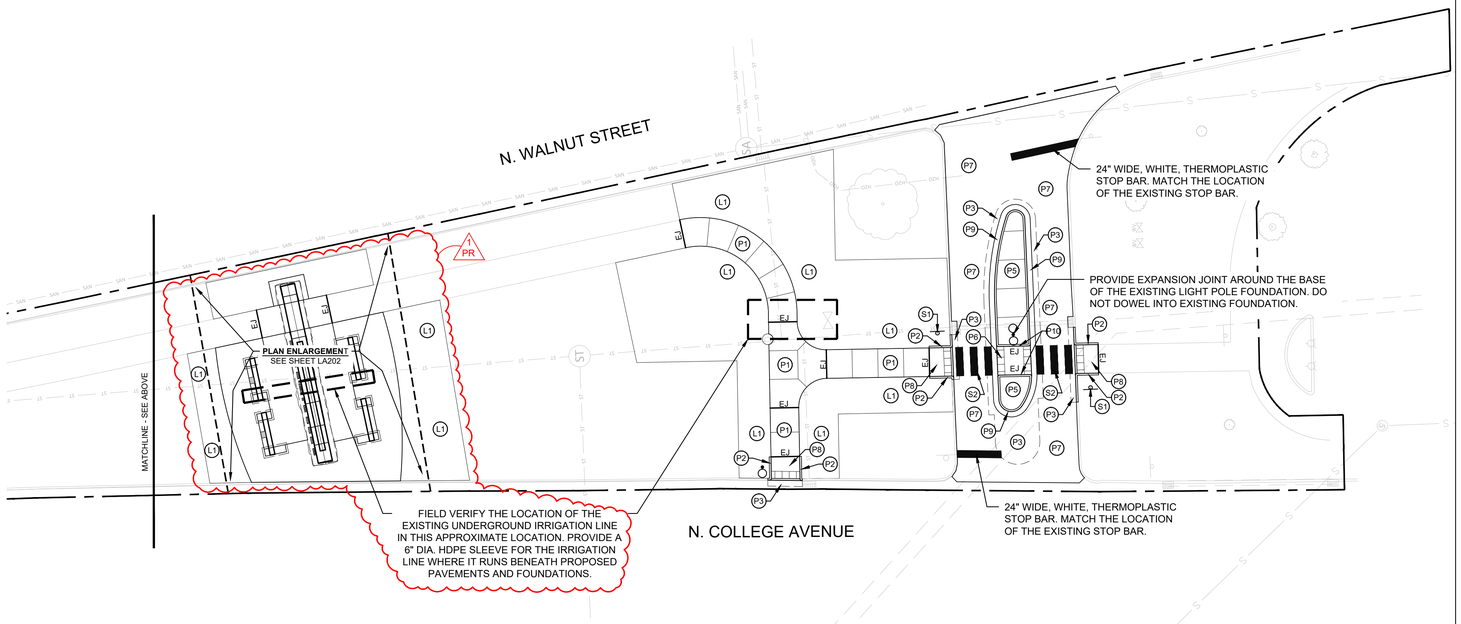

SITE GENERAL NOTES:

1. ALL WORK SHALL BE COORDINATED AND IN COMPLIANCE WITH FEDERAL, STATE, COUNTY, AND LOCAL MUNICIPALITIES AS WARRANTED. ALL WORK TO BE COMPLETED WITHIN THE RIGHT-OF-WAY SHALL CONFORM TO THE CITY OF BLOOMINGTON STANDARDS.
2. EROSION CONTROL MEASURES (I.E. SILT FENCING, AND SEDIMENT CONTROL) SHALL BE PROVIDED BY THE CONTRACTOR PER THE SPECIFICATIONS. SEE EROSION CONTROL DRAWINGS AND SITE CLEARING SPECIFICATIONS.
3. CONTRACTOR SHALL ERECT CONSTRUCTION FENCING AND BARRICADES ALONG THE CONSTRUCTION LIMIT LINE AS NECESSARY. CONTRACTOR SHALL COORDINATE WITH THE OWNER ON THE FINAL LOCATION OF FENCING, BARRICADES, AND CONSTRUCTION ACCESS POINTS.
4. THE CONTRACTOR SHALL BE RESPONSIBLE FOR REPAIRING ALL DAMAGE RESULTING FROM DEMOLITION OR CONSTRUCTION ACTIVITY TO EXISTING SITE ELEMENTS THAT ARE TO REMAIN. ALL AREAS WHERE THE EXISTING PAVEMENT OR PAVEMENTS ARE DAMAGED DURING CONSTRUCTION FROM HEAVY TRAFFIC OR EQUIPMENT, FUEL OIL, GASOLINE, ETCETERA, BY THE GENERAL CONTRACTOR, SUBCONTRACTOR, OR SUPPLIERS SHALL BE RECONSTRUCTED TO ITS ORIGINAL CONDITION. THIS RECONSTRUCTION SHALL TAKE PLACE AT THE END OF THE PROJECT CONSTRUCTION OR DURING THE SCHEDULED GRADING AND PAVING OF THOSE AREAS.
5. THE CONTRACTOR SHALL FOLLOW ALL MANUFACTURER'S REQUIREMENTS AND DIRECTIONS FOR INSTALLATION.
6. PROVIDE A SMOOTH TRANSITION FROM PROPOSED PAVED AREAS TO EXISTING AREAS AS NECESSARY.
7. IT IS THE RESPONSIBILITY OF THE CONTRACTOR(S) TO OBTAIN ALL FEDERAL, STATE, COUNTY, CITY, AND LOCAL PERMITS FOR ANY AND ALL WORK REQUIRED UNLESS OTHERWISE NOTED. THE CONTRACTOR(S) IS RESPONSIBLE TO PAY FOR ALL REQUIRED PERMITS BY ANY OR ALL AGENCIES MENTIONED ABOVE UNLESS OTHERWISE NOTED BY THE CONTRACT OR SPECIFICATIONS.
8. "EJ" DENOTES PROPOSED EXPANSION JOINT ON SITE PLAN. JOINTING LAYOUT SHOWN ON PLANS IS FOR REFERENCE ONLY. FINAL LOCATION OF JOINTS IS SUBJECT TO APPROVAL BY LANDSCAPE ARCHITECT.

KEYNOTES

ITEM	DESCRIPTION	DETAIL REFERENCE
P1	CONCRETE PAVEMENT, 4"	2 | SHEET LA501
P2	CONCRETE BARRIER CURB	3 | SHEET LA501
P3	ASPHALT PATCH	6 | SHEET LA501
P4	CRUSHED STONE PAVEMENT	8 | SHEET LA501
P5	CONCRETE MEDIAN TERMINAL	4&5 | SHEET LA501
P6	MEDIAN CUT-THROUGH	12 | SHEET LA501
P7	ASPHALT PAVEMENT - OVERLAY	7 | SHEET LA501
P8	CONCRETE CURB RAMP	3 | SHEET LA502
P9	CONCRETE MEDIAN - CURB AND GUTTER	4 | LA501
P10	CONCRETE MEDIAN - BARRIER CURB	5 | LA501
F1	LIMESTONE BLOCK WALL	11 | SHEET LA501
F2	TIMBER BENCH	11 | SHEET LA501
F3	GATEWAY SIGN WALL	SHEET LA503
S1	SIGN, X-WALK WARNING	2 | SHEET LA502
S2	PAVEMENT MARKING, X-WALK	9 | SHEET LA501
L1	LAWN	SEE LANDSCAPE PLAN
L2	PLANT BED	SEE LANDSCAPE PLAN
U1	NEW LIGHT FIXTURE	SEE ELECTRICAL SHEETS
U2	ELECTRICAL PANEL	SEE ELECTRICAL SHEETS

1 PR

PREPARED BY:
REA
RUNDELL ERNSTBERGER ASSOCIATES
URBAN DESIGN / PLANNING / LANDSCAPE ARCHITECTURE
618 EAST MARKET STREET / INDIANAPOLIS, INDIANA 46202
P 317.263.0127 / REASITE.COM

PREPARED FOR:
CITY OF BLOOMINGTON
TIM STREET - DIRECTOR
CITY OF BLOOMINGTON, PARKS AND RECREATION
401 N MORTON ST, SUITE 250, BLOOMINGTON, IN 47404
P 812-349-3711 | tim.street@bloomington.in.gov

CONSULTANT:

PROJECT:

BLOOMINGTON GATEWAYS PHASE 1

BLOOMINGTON, INDIANA
BID SET
CONSTRUCTION DOCUMENTS

NORTH
0' 10' 20' 40'
SCALE: 1" = 20'

REVISIONS:

NO.	BY	DESCRIPTION	DATE
1 PR	KS	PROPOSAL REQUEST 001	05-01-2024

THE DRAWINGS, SPECIFICATIONS AND OTHER DOCUMENTS, INCLUDING THOSE IN ELECTRONIC FORM PREPARED BY REA FOR THIS PROJECT ARE INSTRUMENTS OF SERVICE, AND MAY BE USED SOLELY WITH RESPECT TO THIS PROJECT. THE DOCUMENTS MAY NOT BE REPRODUCED OR MODIFIED BY A THIRD PARTY WITHOUT FIRST OBTAINING THE EXPRESS WRITTEN CONSENT OF REA. AUTHORIZED USE OF ELECTRONIC MEDIA OR FILE DOES NOT GUARANTEE THAT THESE FILES CONTAIN COMPLETE AND ACCURATE INFORMATION. IN ORDER TO INSURE THE ACCURACY OF THE INFORMATION CONTAINED AND THAT NO CHANGES OR MODIFICATIONS HAVE BEEN MADE, THESE FILES MUST BE COMPARED TO THE PROJECT'S CONTRACT DOCUMENTS WITH STAMPED AND SEALED CERTIFICATION AND APPLICABLE APPROVED MODIFICATIONS.

DRAWING NAME:

SITE KEYNOTE PLAN

CERTIFICATION:

CECIL A. PENLAND III
REGISTERED
No. 21200004
STATE OF INDIANA
LANDSCAPE ARCHITECT

REA PROJECT #:	2022-1663
DATE:	06/07/23
DRAWN BY:	KS
REVIEWED BY:	JMM

DRAWING:

LA201

© COPYRIGHT RUNDELL ERNSTBERGER ASSOCIATES, INC.

FILE: P:\1663 Bloomington Gateways Phase 1\dwg\CD\revised - Original CD\sheets\LA201 - Site Keynote Plan

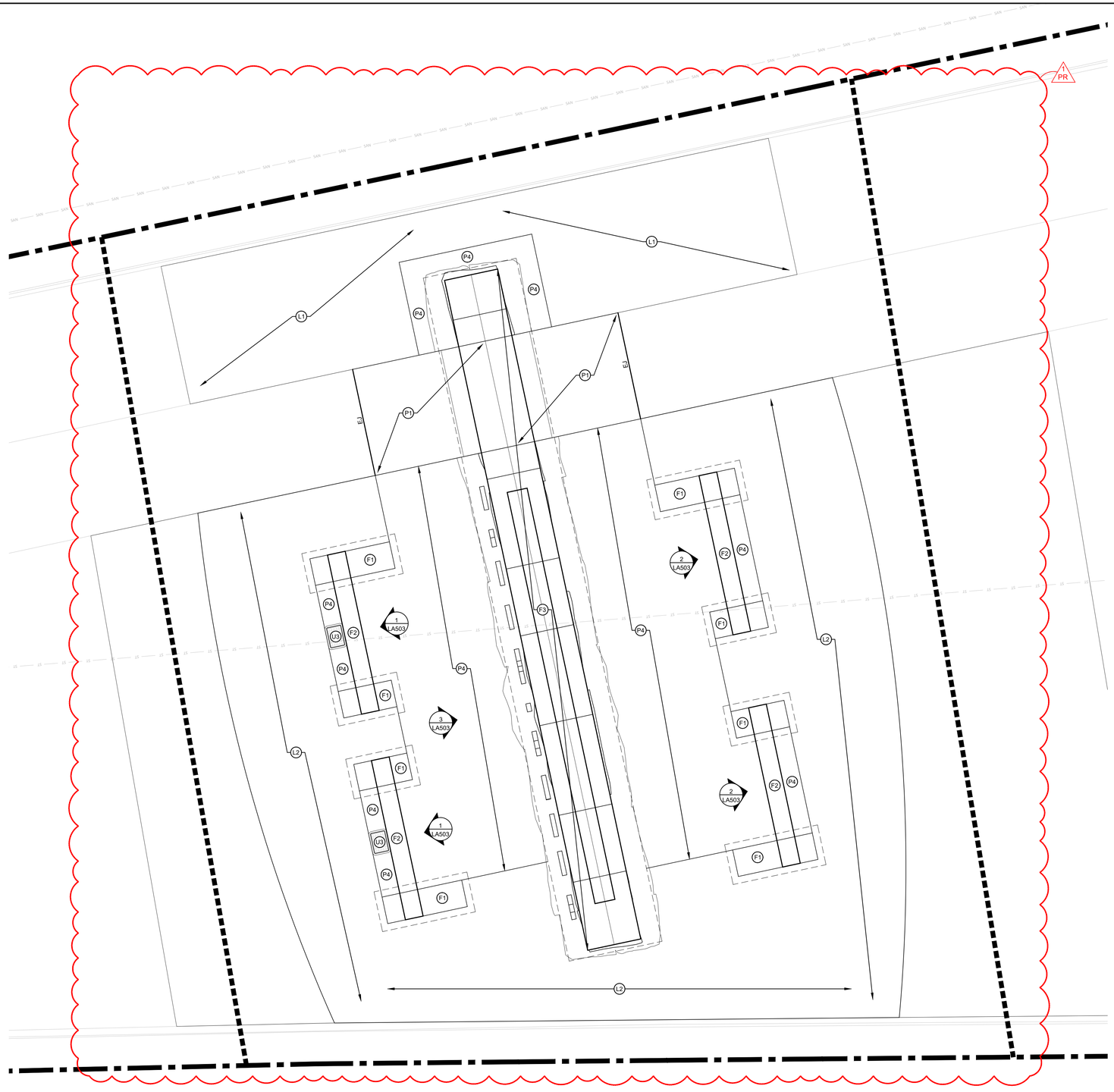

SITE GENERAL NOTES:

1. ALL WORK SHALL BE COORDINATED AND IN COMPLIANCE WITH FEDERAL, STATE, COUNTY, AND LOCAL MUNICIPALITIES AS WARRANTED. ALL WORK TO BE COMPLETED WITHIN THE RIGHT-OF-WAY SHALL CONFORM TO THE CITY OF BLOOMINGTON STANDARDS.
2. EROSION CONTROL MEASURES (I.E. SILT FENCING, AND SEDIMENT CONTROL) SHALL BE PROVIDED BY THE CONTRACTOR PER THE SPECIFICATIONS. SEE EROSION CONTROL DRAWINGS AND SITE CLEARING SPECIFICATIONS.
3. CONTRACTOR SHALL ERECT CONSTRUCTION FENCING AND BARRICADES ALONG THE CONSTRUCTION LIMIT LINE AS NECESSARY. CONTRACTOR SHALL COORDINATE WITH THE OWNER ON THE FINAL LOCATION OF FENCING, BARRICADES, AND CONSTRUCTION ACCESS POINTS.
4. THE CONTRACTOR SHALL BE RESPONSIBLE FOR REPAIRING ALL DAMAGE RESULTING FROM DEMOLITION OR CONSTRUCTION ACTIVITY TO EXISTING SITE ELEMENTS THAT ARE TO REMAIN. ALL AREAS WHERE THE EXISTING PAVEMENT OR PAVEMENTS ARE DAMAGED DURING CONSTRUCTION FROM HEAVY TRAFFIC OR EQUIPMENT, FUEL OIL, GASOLINE, ETCETERA, BY THE GENERAL CONTRACTOR, SUBCONTRACTOR, OR SUPPLIERS SHALL BE RECONSTRUCTED TO ITS ORIGINAL CONDITION. THIS RECONSTRUCTION SHALL TAKE PLACE AT THE END OF THE PROJECT CONSTRUCTION OR DURING THE SCHEDULED GRADING AND PAVING OF THOSE AREAS.
5. THE CONTRACTOR SHALL FOLLOW ALL MANUFACTURER'S REQUIREMENTS AND DIRECTIONS FOR INSTALLATION.
6. PROVIDE A SMOOTH TRANSITION FROM PROPOSED PAVED AREAS TO EXISTING AREAS AS NECESSARY.
7. IT IS THE RESPONSIBILITY OF THE CONTRACTOR(S) TO OBTAIN ALL FEDERAL, STATE, COUNTY, CITY, AND LOCAL PERMITS FOR ANY AND ALL WORK REQUIRED UNLESS OTHERWISE NOTED. THE CONTRACTOR(S) IS RESPONSIBLE TO PAY FOR ALL REQUIRED PERMITS BY ANY OR ALL AGENCIES MENTIONED ABOVE UNLESS OTHERWISE NOTED BY THE CONTRACT OR SPECIFICATIONS.
8. "EJ" DENOTES PROPOSED EXPANSION JOINT ON SITE PLAN. JOINTING LAYOUT SHOWN ON PLANS IS FOR REFERENCE ONLY. FINAL LOCATION OF JOINTS IS SUBJECT TO APPROVAL BY LANDSCAPE ARCHITECT.

KEYNOTES

ITEM	DESCRIPTION	DETAIL REFERENCE
P1	CONCRETE PAVEMENT, 4"	2 | SHEET LA501
P2	CONCRETE BARRIER CURB	3 | SHEET LA501
P3	ASPHALT PATCH	6 | SHEET LA501
P4	CRUSHED STONE PAVEMENT	8 | SHEET LA501
P5	CONCRETE MEDIAN TERMINAL	4&5 | SHEET LA501
P6	MEDIAN CUT-THROUGH	12 | SHEET LA501
P7	ASPHALT PAVEMENT - OVERLAY	7 | SHEET LA501
P8	CONCRETE CURB RAMP	3 | SHEET LA502
P9	CONCRETE MEDIAN - CURB AND GUTTER	4 | LA501
P10	CONCRETE MEDIAN - BARRIER CURB	5 | LA501
F1	LIMESTONE BLOCK WALL	11 | SHEET LA501
F2	TIMBER BENCH	11 | SHEET LA501
F3	GATEWAY SIGN WALL	SHEET LA503
S1	SIGN, X-WALK WARNING	2 | SHEET LA502
S2	PAVEMENT MARKING, X-WALK	9 | SHEET LA501
L1	LAWN	SEE LANDSCAPE PLAN
L2	PLANT BED	SEE LANDSCAPE PLAN
U1	NEW LIGHT FIXTURE	SEE ELECTRICAL SHEETS
U2	ELECTRICAL PANEL	SEE ELECTRICAL SHEETS
U3	ELECTRICAL GROUND BOX	10 | SHEET LA501

1 PR

1 PR

PREPARED BY:

REA
RUNDELL ERNSTBERGER ASSOCIATES
URBAN DESIGN / PLANNING / LANDSCAPE ARCHITECTURE
618 EAST MARKET STREET / INDIANAPOLIS, INDIANA 46202
P 317.263.0127 / REASITE.COM

PREPARED FOR:

CITY OF BLOOMINGTON
TIM STREET - DIRECTOR
CITY OF BLOOMINGTON, PARKS AND RECREATION
401 N MORTON ST, SUITE 250, BLOOMINGTON, IN 47404
P 812-349-3711 | tim.street@bloomington.in.gov

CONSULTANT:

PROJECT:

BLOOMINGTON GATEWAYS PHASE 1

BLOOMINGTON, INDIANA
BID SET
CONSTRUCTION DOCUMENTS

NORTH

0' 2' 4' 8'
SCALE: 1/4" = 1'-0"

REVISIONS:

NO.	BY	DESCRIPTION	DATE
1 PR	KS	PROPOSAL REQUEST 001	05-01-2024

THE DRAWINGS, SPECIFICATIONS AND OTHER DOCUMENTS, INCLUDING THOSE IN ELECTRONIC FORM PREPARED BY REA FOR THIS PROJECT ARE INSTRUMENTS OF SERVICE, AND MAY BE USED SOLELY WITH RESPECT TO THIS PROJECT. THE DOCUMENTS MAY NOT BE REPRODUCED OR MODIFIED BY A THIRD PARTY WITHOUT FIRST OBTAINING THE EXPRESS WRITTEN CONSENT OF REA. AUTHORIZED USE OF ELECTRONIC MEDIA OR FILE DOES NOT GUARANTEE THAT THESE FILES CONTAIN COMPLETE AND ACCURATE INFORMATION. IN ORDER TO INSURE THE ACCURACY OF THE INFORMATION CONTAINED AND THAT NO CHANGES OR MODIFICATIONS HAVE BEEN MADE, THESE FILES MUST BE COMPARED TO THE PROJECT'S CONTRACT DOCUMENTS WITH STAMPED AND SEALED CERTIFICATION AND APPLICABLE APPROVED MODIFICATIONS.

DRAWING NAME:

SITE KEYNOTE ENLARGEMENT PLAN

CERTIFICATION:

CECILIA A. PENLAND III
REGISTERED
No. 21200004
STATE OF INDIANA
LANDSCAPE ARCHITECT

REA PROJECT #:	2022-1663
DATE:	06/07/23
DRAWN BY:	KS
REVIEWED BY:	JMM

DRAWING:

LA202

© COPYRIGHT RUNDELL ERNSTBERGER ASSOCIATES, INC.

FILE: P:\1663 Bloomington Gateways Phase 1\dwg\CD\revised - Original CD\sheets\LA201 - Site Keynote Plan

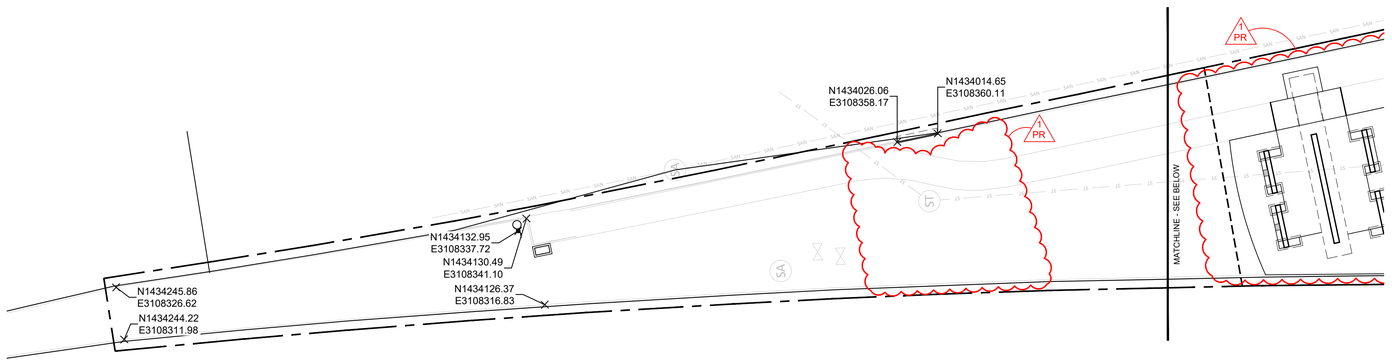

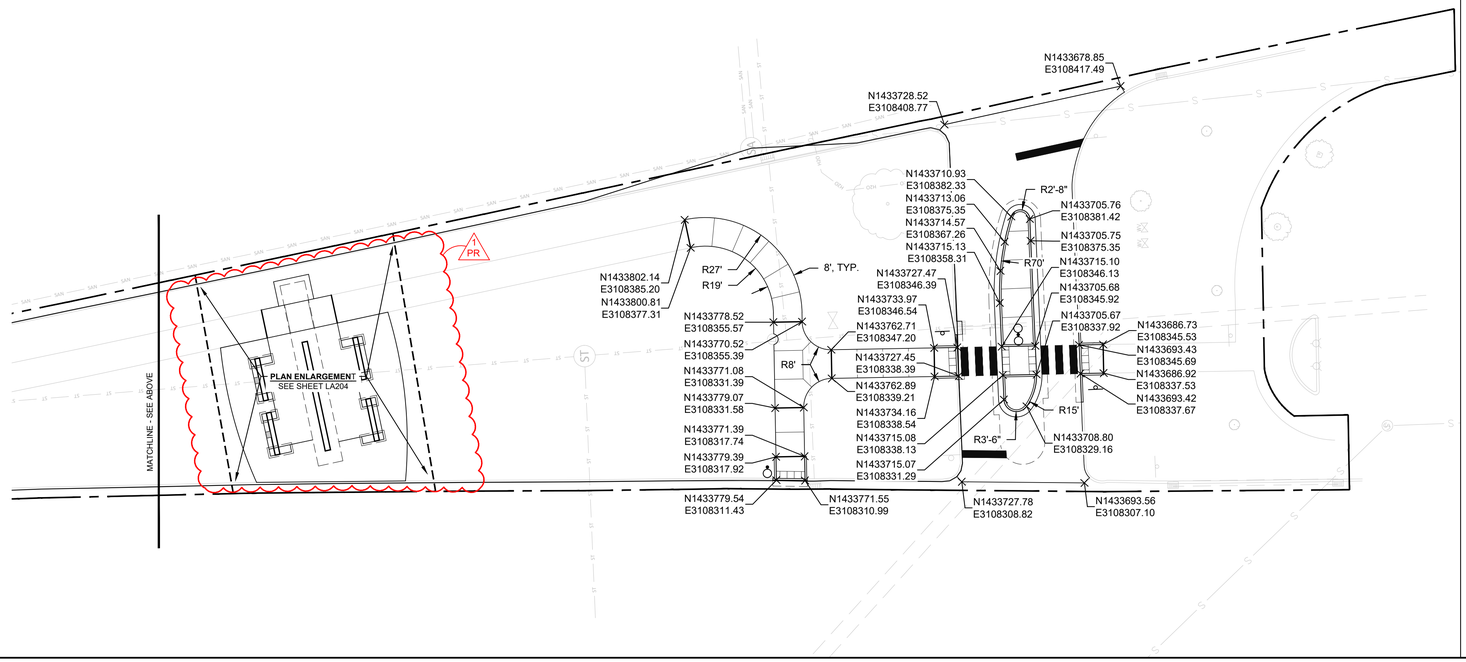

SITE LAYOUT NOTES:

1. SITE LAYOUT DATA, INCLUDING COORDINATE POINTS, IS BASED ON A SURVEY PERFORMED BY BLEDSOE RIGGERT COOPER JAMES (BLOOMINGTON, IN). REPORT ANY DISCREPANCIES BETWEEN THE PLANS AND FIELD CONDITIONS TO THE OWNER AND LANDSCAPE ARCHITECT IMMEDIATELY. RUNDELL ERNSTBERGER ASSOCIATES, INC. IS NOT RESPONSIBLE FOR THE ACCURACY OF THE SURVEY INFORMATION.
2. CONTRACTOR SHALL VERIFY SITE CONDITIONS IN THE FIELD PRIOR TO BIDDING. IT IS THE RESPONSIBILITY OF THE CONTRACTOR TO BE FAMILIAR WITH ANY CHANGES SINCE THE SURVEY WAS PROCURED.
3. ALL CONSTRUCTION LAYOUT STAKING IS TO BE PERFORMED BY A LAND SURVEYOR OR PROFESSIONAL ENGINEER REGISTERED IN THE STATE OF INDIANA. LAYOUT DATA MAY BE MADE AVAILABLE TO THE CONTRACTOR IN A DIGITAL FORMAT FOR USE IN LAYOUT STAKING BY A LAND SURVEYOR OR PROFESSIONAL ENGINEER.
4. AS SOME OF THE HORIZONTAL CONTROL POINTS SHOWN ON THIS PLAN MAY HAVE BEEN REMOVED OR DAMAGED SINCE THEY WERE SET, THE CONTRACTOR SHALL, DURING THE BIDDING PROCESS, VERIFY THE EXISTENCE AND INTEGRITY OF THE HORIZONTAL CONTROL POINTS SHOWN HEREON. THE CONTRACTOR SHALL INCLUDE ANY WORK NECESSARY TO ESTABLISH RELIABLE LAYOUT CONTROL FOR THE PROJECT IN THE BID.
5. IN ORDER TO MAINTAIN THE INTEGRITY OF HORIZONTAL AND VERTICAL CONTROL FOR THE SITE, THE SURVEYOR OR PROFESSIONAL ENGINEER EMPLOYED BY THE CONTRACTOR TO PERFORM CONSTRUCTION LAYOUT STAKING SHALL SET AND PROTECT ADDITIONAL TRAVERSE POINTS OUTSIDE THE AREAS OF CONSTRUCTION ACTIVITY.
6. IF PROVIDED, OR UNLESS NOTED OTHERWISE, ALL DIMENSIONS ARE TO THE FOLLOWING: FACE OF WALL, FACE OF BUILDING, FACE OF CURB, EDGE OF PAVEMENT, CENTERLINE OF PAVEMENT, OR CENTER OF LAYOUT POINT.
7. ALL EDGES OF PAVEMENT ARE TO BE STRAIGHT OR WITH CONSISTENT RADIUS AS SHOWN HEREON. NO UNSPECIFIED TANGENTS OR KINKS WILL BE APPROVED.
8. THE CONTRACTOR SHALL COORDINATE ALL WORK WITH AFFECTED UTILITIES PRIOR TO THE START OF CONSTRUCTION. ALL UTILITIES SHALL BE FIELD LOCATED PRIOR TO THE START OF CONSTRUCTION. ALL UNDERGROUND UTILITIES SHALL BE MAINTAINED AND PROTECTED FROM DAMAGE UNLESS NOTED TO BE REMOVED OR ABANDONED ELSEWHERE.
9. ALL WORK SHALL BE COORDINATED AND IN COMPLIANCE WITH FEDERAL, STATE, COUNTY, AND LOCAL MUNICIPALITIES AS WARRANTED. ALL WORK TO BE COMPLETED WITHIN THE RIGHT-OF-WAY SHALL CONFORM TO THE CITY OF BLOOMINGTON STANDARDS.
10. ALL DIMENSIONS INDICATED ON THE PLANS ARE PARALLEL AND PERPENDICULAR TO THE BASE LINES, PROPERTY LINES, AND OR BUILDING LINES UNLESS NOTED OTHERWISE.

PREPARED BY:

RUNDELL ERNSTBERGER ASSOCIATES

URBAN DESIGN / PLANNING / LANDSCAPE ARCHITECTURE
618 EAST MARKET STREET / INDIANAPOLIS, INDIANA 46202
P 317.263.0127 / REASITE.COM

PREPARED FOR:

CITY OF BLOOMINGTON

TIM STREET - DIRECTOR
CITY OF BLOOMINGTON, PARKS AND RECREATION
401 N MORTON ST, SUITE 250, BLOOMINGTON, IN 47404
P 812-349-3711 | tim.street@bloomington.in.gov

CONSULTANT:

PROJECT:

BLOOMINGTON GATEWAYS PHASE 1

BLOOMINGTON, INDIANA
BID SET
CONSTRUCTION DOCUMENTS

NORTH

0' 10' 20' 40'
SCALE: 1" = 20'

REVISIONS:

NO.	BY	DESCRIPTION	DATE
1 PR	KS	PROPOSAL REQUEST 001	05-01-2024

THE DRAWINGS, SPECIFICATIONS AND OTHER DOCUMENTS, INCLUDING THOSE IN ELECTRONIC FORM PREPARED BY REA FOR THIS PROJECT ARE INSTRUMENTS OF SERVICE, AND MAY BE USED SOLELY WITH RESPECT TO THIS PROJECT. THE DOCUMENTS MAY NOT BE REPRODUCED OR MODIFIED BY A THIRD PARTY WITHOUT FIRST OBTAINING THE EXPRESS WRITTEN CONSENT OF REA. AUTHORIZED USE OF ELECTRONIC MEDIA OR FILE DOES NOT GUARANTEE THAT THESE FILES CONTAIN COMPLETE AND ACCURATE INFORMATION. IN ORDER TO INSURE THE ACCURACY OF THE INFORMATION CONTAINED AND THAT NO CHANGES OR MODIFICATIONS HAVE BEEN MADE, THESE FILES MUST BE COMPARED TO THE PROJECT'S CONTRACT DOCUMENTS WITH STAMPED AND SEALED CERTIFICATION AND APPLICABLE APPROVED MODIFICATIONS.

DRAWING NAME:

SITE LAYOUT PLAN

CERTIFICATION:

CECIL A. PENLAND III
REGISTERED
No. 21200004
STATE OF INDIANA
LANDSCAPE ARCHITECT

REA PROJECT #:	2022-1663
DATE:	06/07/23
DRAWN BY:	KS
REVIEWED BY:	JMM

DRAWING:

LA203

© COPYRIGHT RUNDELL ERNSTBERGER ASSOCIATES, INC.

FILE: P:\1663 Bloomington Gateways Phase 1\dwg\CD\revised - Original CD\sheets\LA203 - Site Layout Plan

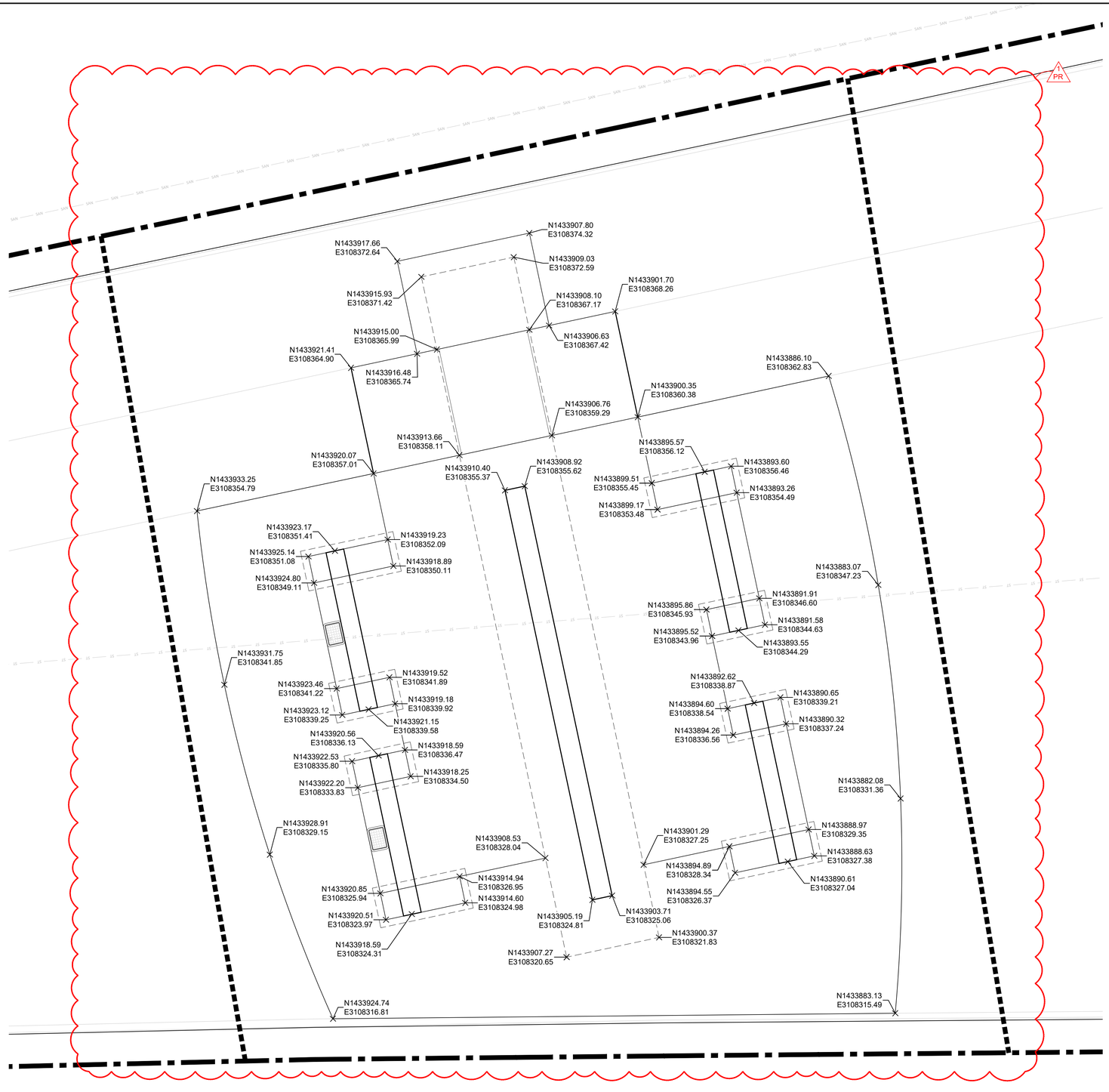

SITE LAYOUT NOTES:

1. SITE LAYOUT DATA, INCLUDING COORDINATE POINTS, IS BASED ON A SURVEY PERFORMED BY BLEDSOE RIGGERT COOPER JAMES (BLOOMINGTON, IN). REPORT ANY DISCREPANCIES BETWEEN THE PLANS AND FIELD CONDITIONS TO THE OWNER AND LANDSCAPE ARCHITECT IMMEDIATELY. RUNDELL ERNSTBERGER ASSOCIATES, INC. IS NOT RESPONSIBLE FOR THE ACCURACY OF THE SURVEY INFORMATION.
2. CONTRACTOR SHALL VERIFY SITE CONDITIONS IN THE FIELD PRIOR TO BIDDING. IT IS THE RESPONSIBILITY OF THE CONTRACTOR TO BE FAMILIAR WITH ANY CHANGES SINCE THE SURVEY WAS PROCURED.
3. ALL CONSTRUCTION LAYOUT STAKING IS TO BE PERFORMED BY A LAND SURVEYOR OR PROFESSIONAL ENGINEER REGISTERED IN THE STATE OF INDIANA. LAYOUT DATA MAY BE MADE AVAILABLE TO THE CONTRACTOR IN A DIGITAL FORMAT FOR USE IN LAYOUT STAKING BY A LAND SURVEYOR OR PROFESSIONAL ENGINEER.
4. AS SOME OF THE HORIZONTAL CONTROL POINTS SHOWN ON THIS PLAN MAY HAVE BEEN REMOVED OR DAMAGED SINCE THEY WERE SET, THE CONTRACTOR SHALL, DURING THE BIDDING PROCESS, VERIFY THE EXISTENCE AND INTEGRITY OF THE HORIZONTAL CONTROL POINTS SHOWN HEREON. THE CONTRACTOR SHALL INCLUDE ANY WORK NECESSARY TO ESTABLISH RELIABLE LAYOUT CONTROL FOR THE PROJECT IN THE BID.
5. IN ORDER TO MAINTAIN THE INTEGRITY OF HORIZONTAL AND VERTICAL CONTROL FOR THE SITE, THE SURVEYOR OR PROFESSIONAL ENGINEER EMPLOYED BY THE CONTRACTOR TO PERFORM CONSTRUCTION LAYOUT STAKING SHALL SET AND PROTECT ADDITIONAL TRAVERSE POINTS OUTSIDE THE AREAS OF CONSTRUCTION ACTIVITY.
6. IF PROVIDED, OR UNLESS NOTED OTHERWISE, ALL DIMENSIONS ARE TO THE FOLLOWING: FACE OF WALL, FACE OF BUILDING, FACE OF CURB, EDGE OF PAVEMENT, CENTERLINE OF PAVEMENT, OR CENTER OF LAYOUT POINT.
7. ALL EDGES OF PAVEMENT ARE TO BE STRAIGHT OR WITH CONSISTENT RADIUS AS SHOWN HEREON. NO UNSPECIFIED TANGENTS OR KINKS WILL BE APPROVED.
8. THE CONTRACTOR SHALL COORDINATE ALL WORK WITH AFFECTED UTILITIES PRIOR TO THE START OF CONSTRUCTION. ALL UTILITIES SHALL BE FIELD LOCATED PRIOR TO THE START OF CONSTRUCTION. ALL UNDERGROUND UTILITIES SHALL BE MAINTAINED AND PROTECTED FROM DAMAGE UNLESS NOTED TO BE REMOVED OR ABANDONED ELSEWHERE.
9. ALL WORK SHALL BE COORDINATED AND IN COMPLIANCE WITH FEDERAL, STATE, COUNTY, AND LOCAL MUNICIPALITIES AS WARRANTED. ALL WORK TO BE COMPLETED WITHIN THE RIGHT-OF-WAY SHALL CONFORM TO THE CITY OF BLOOMINGTON STANDARDS.
10. ALL DIMENSIONS INDICATED ON THE PLANS ARE PARALLEL AND PERPENDICULAR TO THE BASE LINES, PROPERTY LINES, AND OR BUILDING LINES UNLESS NOTED OTHERWISE.

PREPARED BY:

REA
RUNDELL ERNSTBERGER ASSOCIATES
URBAN DESIGN / PLANNING / LANDSCAPE ARCHITECTURE
618 EAST MARKET STREET / INDIANAPOLIS, INDIANA 46202
P 317.263.0127 / REASITE.COM

PREPARED FOR:

CITY OF BLOOMINGTON
TIM STREET - DIRECTOR
CITY OF BLOOMINGTON, PARKS AND RECREATION
401 N MORTON ST, SUITE 250, BLOOMINGTON, IN 47404
P 812-349-3711 | tim.street@bloomington.in.gov

CONSULTANT:

PROJECT:

BLOOMINGTON GATEWAYS PHASE 1

BLOOMINGTON, INDIANA

BID SET

CONSTRUCTION DOCUMENTS

NORTH

0' 2' 4' 8'

SCALE: 1/4" = 1'-0"

REVISIONS:

NO.	BY	DESCRIPTION	DATE
1 PR	KS	PROPOSAL REQUEST 001	05-01-2024

THE DRAWINGS, SPECIFICATIONS AND OTHER DOCUMENTS, INCLUDING THOSE IN ELECTRONIC FORM PREPARED BY REA FOR THIS PROJECT ARE INSTRUMENTS OF SERVICE, AND MAY BE USED SOLELY WITH RESPECT TO THIS PROJECT. THE DOCUMENTS MAY NOT BE REPRODUCED OR MODIFIED BY A THIRD PARTY WITHOUT FIRST OBTAINING THE EXPRESS WRITTEN CONSENT OF REA. AUTHORIZED USE OF ELECTRONIC MEDIA OR FILE DOES NOT GUARANTEE THAT THESE FILES CONTAIN COMPLETE AND ACCURATE INFORMATION. IN ORDER TO INSURE THE ACCURACY OF THE INFORMATION CONTAINED AND THAT NO CHANGES OR MODIFICATIONS HAVE BEEN MADE, THESE FILES MUST BE COMPARED TO THE PROJECT'S CONTRACT DOCUMENTS WITH STAMPED AND SEALED CERTIFICATION AND APPLICABLE APPROVED MODIFICATIONS.

DRAWING NAME:

SITE LAYOUT ENLARGEMENT PLAN

CERTIFICATION:

CECIL A. PENLAND III
REGISTERED
No. 21200004
STATE OF INDIANA
LANDSCAPE ARCHITECT

REA PROJECT #:	2022-1663
DATE:	06/07/23
DRAWN BY:	KS
REVIEWED BY:	JMM

DRAWING:

LA204

© COPYRIGHT RUNDELL ERNSTBERGER ASSOCIATES, INC.

FILE: P:\1663 Bloomington Gateways Phase 1\dwg\CD\revised - Original CD\sheets\LA203 - Site Layout Plan

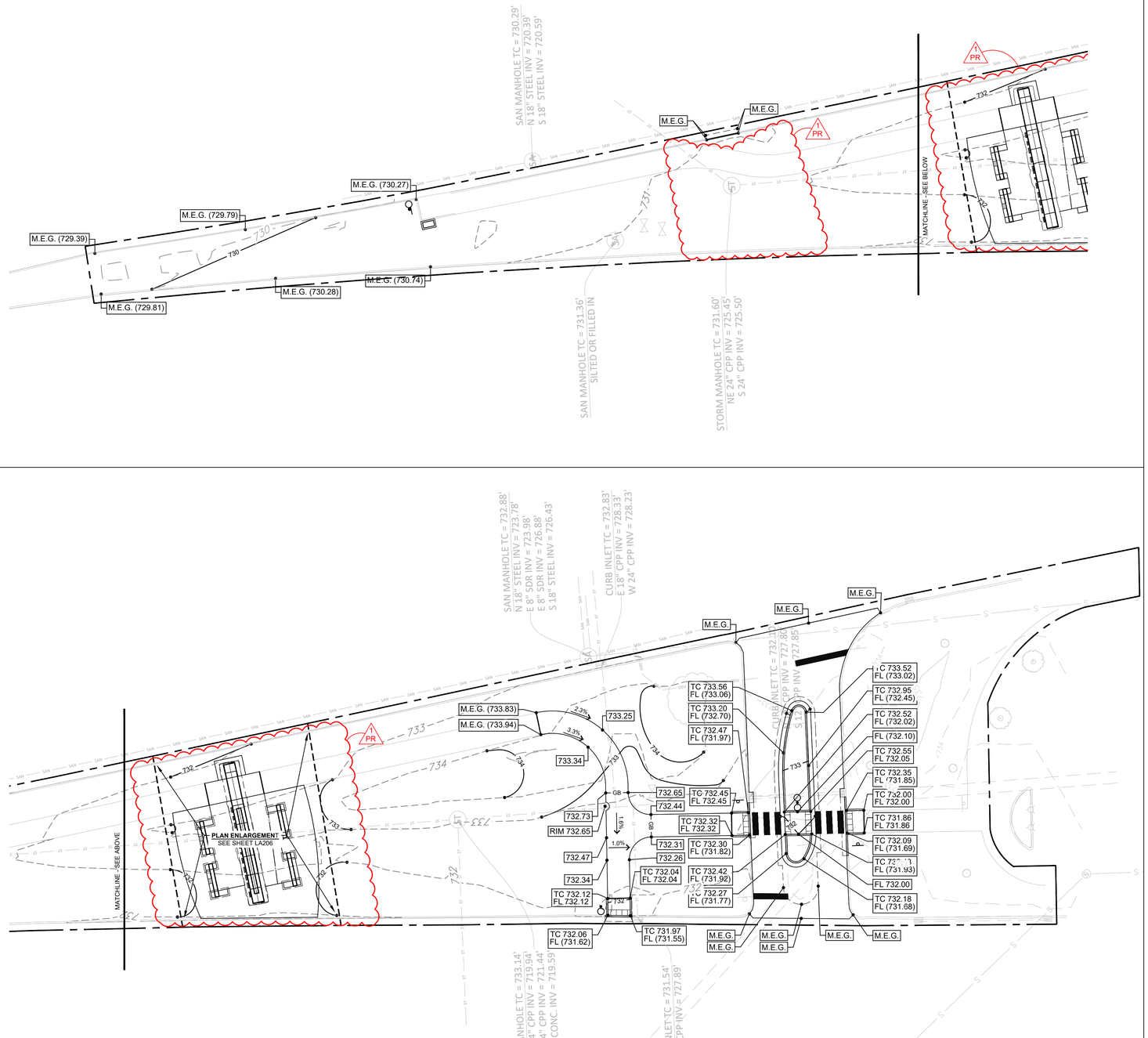

SITE GRADING NOTES:

1. SITE LAYOUT DATA, INCLUDING COORDINATE POINTS, IS BASED ON A SURVEY PERFORMED BY BLEDSOE RIGGERT COOPER JAMES (BLOOMINGTON, IN). REPORT ANY DISCREPANCIES BETWEEN THE PLANS AND FIELD CONDITIONS TO THE OWNER AND LANDSCAPE ARCHITECT IMMEDIATELY. RUNDELL ERNSTBERGER ASSOCIATES, INC. IS NOT RESPONSIBLE FOR THE ACCURACY OF THE SURVEY INFORMATION.
2. CONTRACTOR SHALL VERIFY SITE CONDITIONS IN THE FIELD PRIOR TO BIDDING. IT IS THE RESPONSIBILITY OF THE CONTRACTOR TO BE FAMILIAR WITH ANY CHANGES SINCE THE SURVEY WAS PROCURED. IMMEDIATELY REPORT ANY DISCREPANCIES BETWEEN THE PLANS AND FIELD CONDITIONS TO THE OWNER AND LANDSCAPE ARCHITECT.
3. CONTRACTOR SHALL VERIFY ALL EXISTING GRADES REQUIRED TO BE MATCHED OR MAINTAINED AND LOCATIONS OF ALL UTILITIES PRIOR TO THE START OF CONSTRUCTION ACTIVITIES. CONTRACTOR SHALL IMMEDIATELY NOTIFY LANDSCAPE ARCHITECT OF DISCREPANCIES BETWEEN EXISTING GRADES IN FIELD AND EXISTING GRADES SHOWN ON THE PLANS..
4. ALL HORIZONTAL AND VERTICAL CURVES SHALL BE SMOOTH AND CONTINUOUS. NO UNSPECIFIED KINKS AND TANGENTS WILL BE PERMITTED.
5. MATCH EXISTING GRADES CLEANLY AND SMOOTHLY.
6. PROVIDE POSITIVE DRAINAGE IN ALL PAVED AREAS WITHOUT PONDING WATER. WITH THE OWNER/LANDSCAPE ARCHITECT OBSERVING ON SITE, THE CONTRACTOR SHALL TEST ALL PAVED AREAS FOR "BIRD BATH"-TYPE CONDITIONS BY FLOODING THE ENTIRE PAVEMENT AREA AND MARKING THE PROBLEMATIC AREAS. CORRECTIONS SHALL BE MADE IF NECESSARY.
7. PROPOSED SPOT ELEVATIONS REPRESENT FINISH GRADE OF PAVEMENTS, PLANT BEDS, AND TURF AREAS, UNLESS NOTED OTHERWISE. PROPOSED ELEVATIONS INDICATED IN PLANT BEDS AND TURF AREAS REQUIRE SETTLING OF SOIL.
8. SEE THE APPROPRIATE PLAN AND/OR DETAIL(S) TO DETERMINE THE SUBGRADE ELEVATION REQUIRED BELOW A PROPOSED FINAL ELEVATION.
9. CONTRACTOR SHALL INSTALL THE ADJACENT FINISH GRADE AT 1/2" BELOW PAVEMENT WHEN SHEET DRAINAGE FROM PAVEMENT IS PROPOSED.
10. ALL EXISTING SURFACE UTILITY STRUCTURES (I.E. MANHOLE COVERS, CATCH BASIN GRATES, WATER AND GAS HANDHOLDS, ETC.) SHALL BE ADJUSTED TO THE PROPOSED FINISH GRADE ELEVATION, AS APPROPRIATE.
11. CONTRACTOR SHALL ENSURE THAT TRANSITIONS BETWEEN PROPOSED SLOPES ON PATHWAYS ARE SMOOTH AND DO NOT RESULT IN BREAKS IN GRADE AT LOW AND HIGH POINTS.

GRADING SYMBOLS & ABBREVIATIONS:

BF	BOTTOM OF FOUNDATION	M.E.G.	MATCH EXISTING GRADE
FC	FLUSH CURB	RIM	RIM ELEVATION
FL	FLOW LINE	TC	TOP OF CURB
GR	GRADE	TF	TOP OF FOUNDATION
GB	GRADE BREAK	TW	TOP OF WALL

(724.50) EXISTING SPOT ELEVATION (VERIFY)

791.80 PROPOSED SPOT ELEVATION

1.0% PROPOSED SLOPE

781 EXISTING CONTOUR LINE

781 PROPOSED CONTOUR LINE

GB GRADE BREAK

PREPARED BY:

RUNDELL ERNSTBERGER ASSOCIATES

URBAN DESIGN / PLANNING / LANDSCAPE ARCHITECTURE
618 EAST MARKET STREET / INDIANAPOLIS, INDIANA 46202
P 317.263.0127 / REASITE.COM

PREPARED FOR:

CITY OF BLOOMINGTON

TIM STREET - DIRECTOR
CITY OF BLOOMINGTON, PARKS AND RECREATION
401 N MORTON ST, SUITE 250, BLOOMINGTON, IN 47404
P 812-349-3711 | tim.street@bloomington.in.gov

CONSULTANT:

PROJECT:

BLOOMINGTON GATEWAYS PHASE 1

BLOOMINGTON, INDIANA
BID SET
CONSTRUCTION DOCUMENTS

NORTH

0' 10' 20' 40'
SCALE: 1" = 20'

REVISIONS:

NO.	BY	DESCRIPTION	DATE
1 PR	KS	PROPOSAL REQUEST 001	05-01-2024

THE DRAWINGS, SPECIFICATIONS AND OTHER DOCUMENTS, INCLUDING THOSE IN ELECTRONIC FORM PREPARED BY REA FOR THIS PROJECT ARE INSTRUMENTS OF SERVICE, AND MAY BE USED SOLELY WITH RESPECT TO THIS PROJECT. THE DOCUMENTS MAY NOT BE REPRODUCED OR MODIFIED BY A THIRD PARTY WITHOUT FIRST OBTAINING THE EXPRESS WRITTEN CONSENT OF REA. AUTHORIZED USE OF ELECTRONIC MEDIA OR FILE DOES NOT GUARANTEE THAT THESE FILES CONTAIN COMPLETE AND ACCURATE INFORMATION. IN ORDER TO INSURE THE ACCURACY OF THE INFORMATION CONTAINED AND THAT NO CHANGES OR MODIFICATIONS HAVE BEEN MADE, THESE FILES MUST BE COMPARED TO THE PROJECT'S CONTRACT DOCUMENTS WITH STAMPED AND SEALED CERTIFICATION AND APPLICABLE APPROVED MODIFICATIONS.

DRAWING NAME:

SITE GRADING PLAN

CERTIFICATION:

CECIL A. PENLAND III
REGISTERED
No. 21200004
STATE OF
INDIANA
LANDSCAPE ARCHITECT

REA PROJECT #:	2022-1663
DATE:	06/07/23
DRAWN BY:	KS
REVIEWED BY:	JMM

DRAWING:

LA205

© COPYRIGHT RUNDELL ERNSTBERGER ASSOCIATES, INC.

FILE: P:\1663 Bloomington Gateways Phase 1\dwg\CD\revised - Original CD\sheets\LA205 - Site Grading Plan

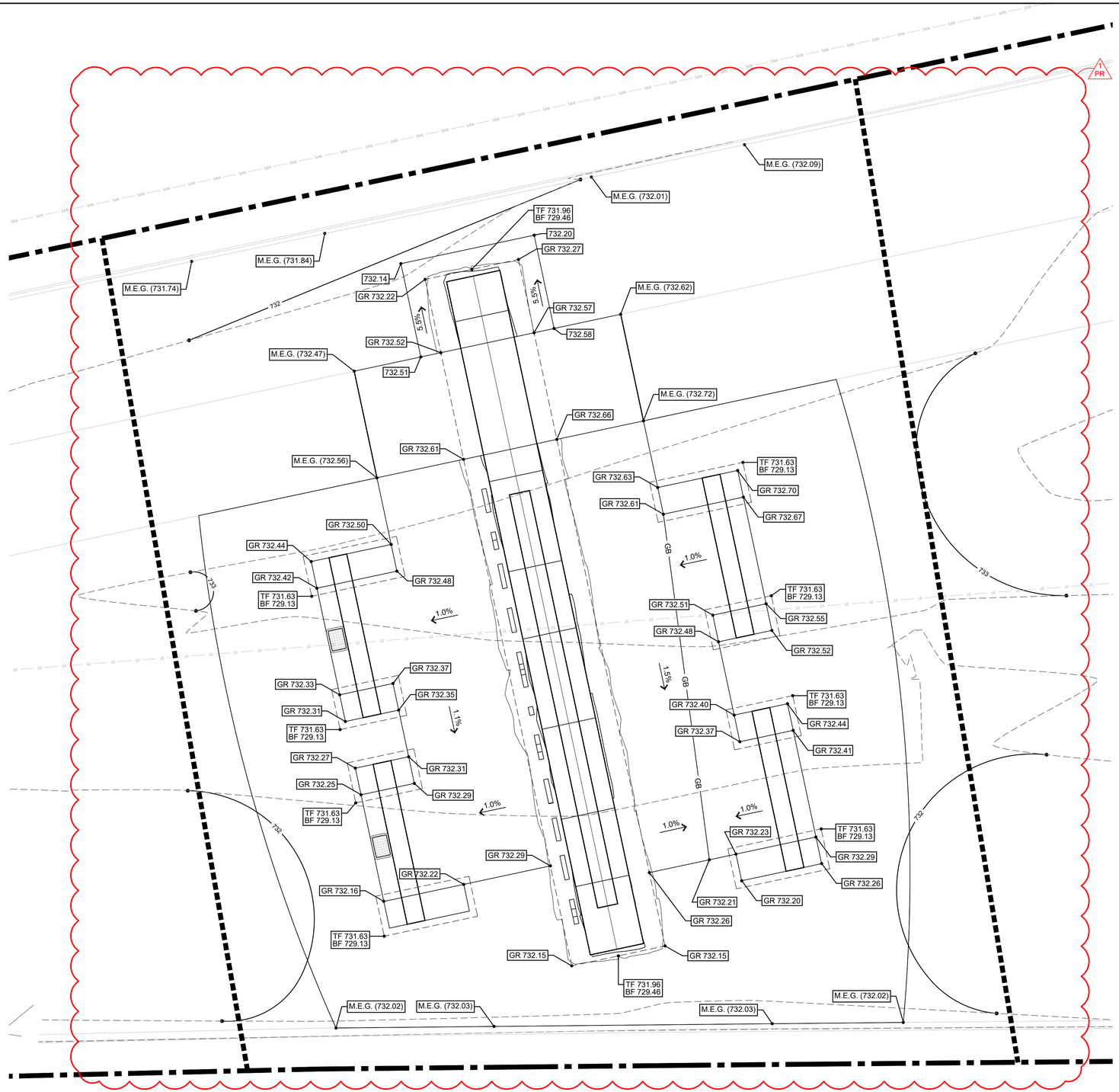

SITE GRADING NOTES:

1. SITE LAYOUT DATA, INCLUDING COORDINATE POINTS, IS BASED ON A SURVEY PERFORMED BY BLEDSOE RIGGERT COOPER JAMES (BLOOMINGTON, IN). REPORT ANY DISCREPANCIES BETWEEN THE PLANS AND FIELD CONDITIONS TO THE OWNER AND LANDSCAPE ARCHITECT IMMEDIATELY. RUNDELL ERNSTBERGER ASSOCIATES, INC. IS NOT RESPONSIBLE FOR THE ACCURACY OF THE SURVEY INFORMATION.
2. CONTRACTOR SHALL VERIFY SITE CONDITIONS IN THE FIELD PRIOR TO BIDDING. IT IS THE RESPONSIBILITY OF THE CONTRACTOR TO BE FAMILIAR WITH ANY CHANGES SINCE THE SURVEY WAS PROCURED. IMMEDIATELY REPORT ANY DISCREPANCIES BETWEEN THE PLANS AND FIELD CONDITIONS TO THE OWNER AND LANDSCAPE ARCHITECT.
3. CONTRACTOR SHALL VERIFY ALL EXISTING GRADES REQUIRED TO BE MATCHED OR MAINTAINED AND LOCATIONS OF ALL UTILITIES PRIOR TO THE START OF CONSTRUCTION ACTIVITIES. CONTRACTOR SHALL IMMEDIATELY NOTIFY LANDSCAPE ARCHITECT OF DISCREPANCIES BETWEEN EXISTING GRADES IN FIELD AND EXISTING GRADES SHOWN ON THE PLANS..
4. ALL HORIZONTAL AND VERTICAL CURVES SHALL BE SMOOTH AND CONTINUOUS. NO UNSPECIFIED KINKS AND TANGENTS WILL BE PERMITTED.
5. MATCH EXISTING GRADES CLEANLY AND SMOOTHLY.
6. PROVIDE POSITIVE DRAINAGE IN ALL PAVED AREAS WITHOUT PONDING WATER. WITH THE OWNER/LANDSCAPE ARCHITECT OBSERVING ON SITE, THE CONTRACTOR SHALL TEST ALL PAVED AREAS FOR "BIRD BATH"-TYPE CONDITIONS BY FLOODING THE ENTIRE PAVEMENT AREA AND MARKING THE PROBLEMATIC AREAS. CORRECTIONS SHALL BE MADE IF NECESSARY.
7. PROPOSED SPOT ELEVATIONS REPRESENT FINISH GRADE OF PAVEMENTS, PLANT BEDS, AND TURF AREAS, UNLESS NOTED OTHERWISE. PROPOSED ELEVATIONS INDICATED IN PLANT BEDS AND TURF AREAS REQUIRE SETTLING OF SOIL.
8. SEE THE APPROPRIATE PLAN AND/OR DETAIL(S) TO DETERMINE THE SUBGRADE ELEVATION REQUIRED BELOW A PROPOSED FINAL ELEVATION.
9. CONTRACTOR SHALL INSTALL THE ADJACENT FINISH GRADE AT 1/2" BELOW PAVEMENT WHEN SHEET DRAINAGE FROM PAVEMENT IS PROPOSED.
10. ALL EXISTING SURFACE UTILITY STRUCTURES (I.E. MANHOLE COVERS, CATCH BASIN GRATES, WATER AND GAS HANDHOLDS, ETC.) SHALL BE ADJUSTED TO THE PROPOSED FINISH GRADE ELEVATION, AS APPROPRIATE.
11. CONTRACTOR SHALL ENSURE THAT TRANSITIONS BETWEEN PROPOSED SLOPES ON PATHWAYS ARE SMOOTH AND DO NOT RESULT IN BREAKS IN GRADE AT LOW AND HIGH POINTS.

GRADING SYMBOLS & ABBREVIATIONS:

BF	BOTTOM OF FOUNDATION	M.E.G.	MATCH EXISTING GRADE
FC	FLUSH CURB	RIM	RIM ELEVATION
FL	FLOW LINE	TC	TOP OF CURB
GR	GRADE	TF	TOP OF FOUNDATION
GB	GRADE BREAK	TW	TOP OF WALL

- (724.50) EXISTING SPOT ELEVATION (VERIFY)
- 791.80 PROPOSED SPOT ELEVATION
- 1.0% PROPOSED SLOPE
- 781 EXISTING CONTOUR LINE
- 781 PROPOSED CONTOUR LINE
- GB GRADE BREAK

PREPARED BY:

REA
RUNDELL ERNSTBERGER ASSOCIATES
URBAN DESIGN / PLANNING / LANDSCAPE ARCHITECTURE
618 EAST MARKET STREET / INDIANAPOLIS, INDIANA 46202
P 317.263.0127 / REASITE.COM

PREPARED FOR:

CITY OF BLOOMINGTON
TIM STREET - DIRECTOR
CITY OF BLOOMINGTON, PARKS AND RECREATION
401 N MORTON ST, SUITE 250, BLOOMINGTON, IN 47404
P 812-349-3711 | tim.street@bloomington.in.gov

CONSULTANT:

PROJECT:

BLOOMINGTON GATEWAYS PHASE 1

BLOOMINGTON, INDIANA
BID SET
CONSTRUCTION DOCUMENTS

NORTH
0' 2' 4' 8'
SCALE: 1/4" = 1'-0"

REVISIONS:

NO.	BY	DESCRIPTION	DATE
1 PR	KS	PROPOSAL REQUEST 001	05-01-2024

THE DRAWINGS, SPECIFICATIONS AND OTHER DOCUMENTS, INCLUDING THOSE IN ELECTRONIC FORM PREPARED BY REA FOR THIS PROJECT ARE INSTRUMENTS OF SERVICE, AND MAY BE USED SOLELY WITH RESPECT TO THIS PROJECT. THE DOCUMENTS MAY NOT BE REPRODUCED OR MODIFIED BY A THIRD PARTY WITHOUT FIRST OBTAINING THE EXPRESS WRITTEN CONSENT OF REA. AUTHORIZED USE OF ELECTRONIC MEDIA OR FILE DOES NOT GUARANTEE THAT THESE FILES CONTAIN COMPLETE AND ACCURATE INFORMATION. IN ORDER TO INSURE THE ACCURACY OF THE INFORMATION CONTAINED AND THAT NO CHANGES OR MODIFICATIONS HAVE BEEN MADE, THESE FILES MUST BE COMPARED TO THE PROJECT'S CONTRACT DOCUMENTS WITH STAMPED AND SEALED CERTIFICATION AND APPLICABLE APPROVED MODIFICATIONS.

DRAWING NAME:

SITE GRADING ENLARGEMENT PLAN

CERTIFICATION:

CECIL A. PENLAND III
REGISTERED
No. 21200004
STATE OF INDIANA
LANDSCAPE ARCHITECT

REA PROJECT #:	2022-1663
DATE:	06/07/23
DRAWN BY:	KS
REVIEWED BY:	JMM

DRAWING:

LA206

© COPYRIGHT RUNDELL ERNSTBERGER ASSOCIATES, INC.

FILE: P:\1663 Bloomington Gateways Phase 1\dwg\CD\revised - Original CD\sheets\LA205 - Site Grading Plan

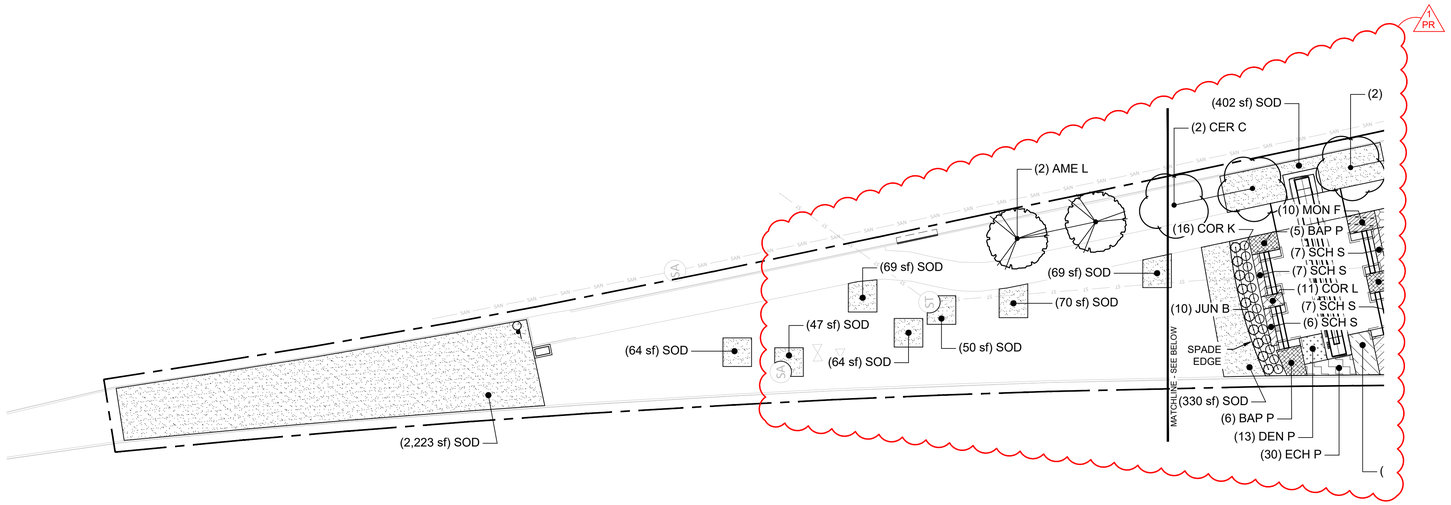

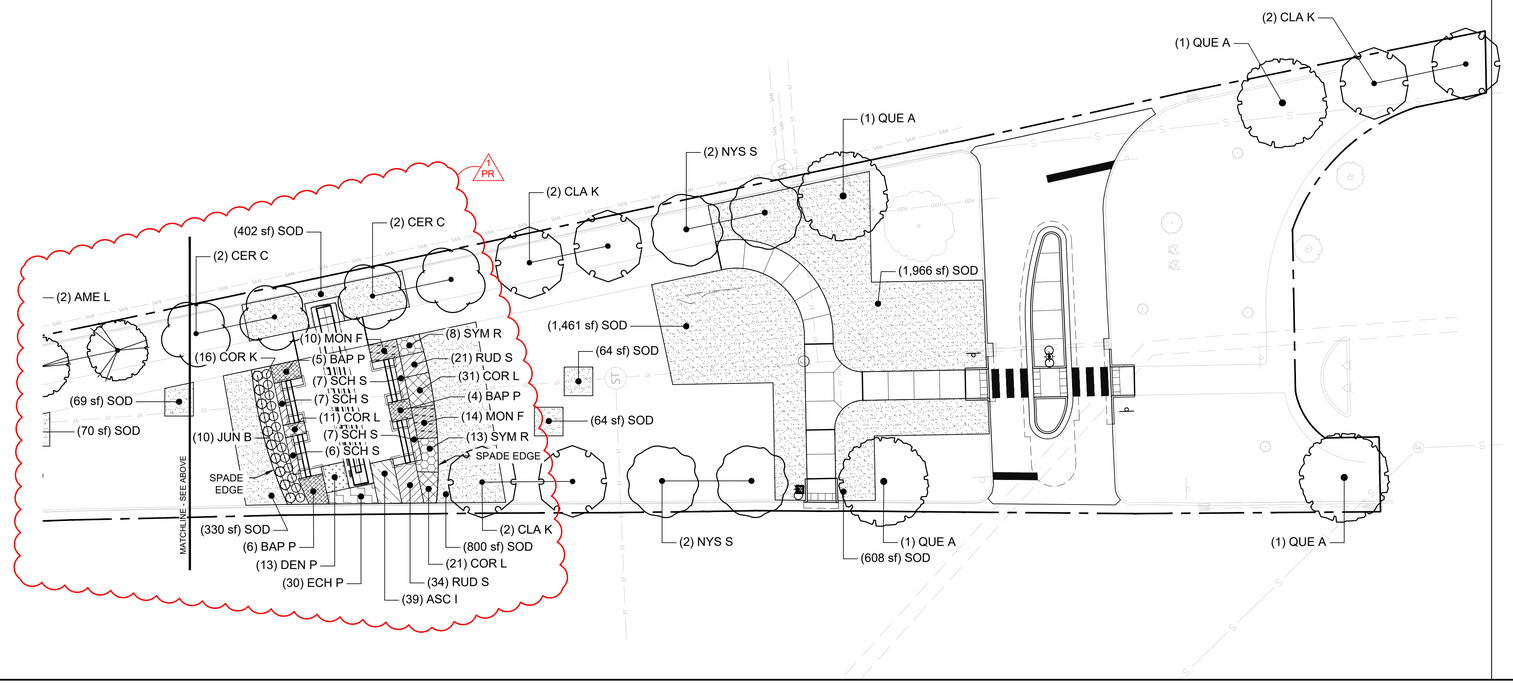

PLANTING NOTES:

1. NOTIFY OWNER/ARCHITECT IMMEDIATELY OF ANY DISCREPANCIES BETWEEN THE SPECIFICATIONS AND DRAWINGS, PRIOR TO BID DATE, AND/OR PRIOR TO CONSTRUCTION.
2. LANDSCAPE ARCHITECT AND OWNER SHALL INSPECT ALL PLANT LOCATIONS AND PLANT BED EDGES PRIOR TO INSTALLATION. THE LANDSCAPE ARCHITECT RESERVES THE RIGHT TO ADJUST PLANT LOCATIONS ON-SITE. ON-SITE ADJUSTMENTS WILL BE REQUIRED.
3. PLANT COUNTS INDICATED ON DRAWINGS ARE FOR LANDSCAPE ARCHITECT/OWNER'S USE ONLY. CONTRACTOR SHALL MAKE OWN PLANT QUANTITY TAKE-OFFS USING DRAWINGS, SPECIFICATIONS, AND PLANT SCHEDULE REQUIREMENTS (I.E. SPACING) - UNLESS OTHERWISE DIRECTED BY THE LANDSCAPE ARCHITECT. CONTRACTOR TO VERIFY BED MEASUREMENTS AND INSTALL APPROPRIATE QUANTITIES AS GOVERNED BY PLANT SPACING PER THE SCHEDULE. CONTRACTOR SHALL ACCOUNT FOR ALL SLOPES IN MATERIAL QUANTITY CALCULATIONS.
4. IN CASE OF DISCREPANCIES BETWEEN THE PLANS AND PLANT LIST, THE PLAN SHALL DICTATE. IF IN QUESTION, CONTACT THE LANDSCAPE ARCHITECT.
5. DO NOT MAKE SUBSTITUTIONS. IF SPECIFIED LANDSCAPE MATERIAL IS NOT AVAILABLE, SUBMIT PROOF OF NON-AVAILABILITY TO LANDSCAPE ARCHITECT TOGETHER WITH A PROPOSAL FOR USE OF EQUIVALENT MATERIAL. LANDSCAPE ARCHITECT RESERVES THE RIGHT TO DETERMINE MATERIAL EQUIVALENCY.
6. CONTRACTOR SHALL INSTALL TOPSOIL IN ALL PROPOSED PLANT BED AREAS, LAWNS, AND ALL DISTURBED AREAS, UNLESS NOTED OTHERWISE.
7. THE EARTHWORK CONTRACTOR SHALL COORDINATE THE PLACEMENT AND GRADING OF SUBSOIL TO ACCOMMODATE TOPSOIL. REFER TO SOIL DETAILS AND SPECIFICATIONS.
8. PROTECT STRUCTURES, UTILITIES, SIDEWALKS, PAVEMENTS, AND OTHER FACILITIES AND EXISTING EXTERIOR PLANTS FROM DAMAGE CAUSED BY PLANTING OPERATIONS. RECONDITION AND SOD ALL AREAS DISTURBED BY CONSTRUCTION ACTIVITIES THAT ARE NOT TO RECEIVE OTHER SURFACE TREATMENT (PRESERVED, RENOVATED AREAS, MULCH, GROUNDCOVER, ETC.).
9. PLACE PLANTS AND ALL OTHER MATERIALS TO BE STORED ON-SITE WHERE THEY DO NOT CONFLICT WITH CONSTRUCTION OPERATIONS AND AS DIRECTED BY THE OWNER.
10. LANDSCAPE CONTRACTOR SHALL NOTIFY LANDSCAPE ARCHITECT IN WRITING PRIOR TO BID DATE OF ANY PLANTS THAT HE/SHE FEELS MAY NOT SURVIVE TRANSPLANTING OPERATIONS OR IN LOCATIONS NOTED.
11. PLANT BEDS TO RECEIVE MIN. 3" OF SHREDDED HARDWOOD MULCH (UNLESS OTHERWISE NOTED) - SEE SPECIFICATIONS. THE USE OF COMPOST MIX IN PERENNIAL, ORNAMENTAL GRASS, AND GROUND COVER BEDS IS ACCEPTABLE UPON WRITTEN APPROVAL BY OWNER/ARCHITECT.
12. PROVIDE SHOVEL-CUT SPADE EDGE ADJACENT TO ALL PLANTING BED AREAS NOT BORDERED BY CONCRETE OR OTHER EDGING. SEE SPADE EDGE DETAIL.
13. ALL TREE PITS TO BE DUG IN ADVANCE OF PLANTING AND EACH TREE PIT TO BE TESTED FOR ADEQUATE DRAINAGE SEE SPECIFICATIONS FOR INSTRUCTIONS ON HOW TO ADMINISTER THE TEST FOR RATE OF PERCOLATION. PROVIDE DRY WELL IF DETERMINED NECESSARY BY LANDSCAPE ARCHITECT. SEE SPECIFICATIONS AND DETAIL.
14. USE SOIL EXCAVATED FROM TREE PLANTING HOLE AS BACKFILL FOR TREE PLANTINGS WHEN POSSIBLE.
15. REFER TO BLOOMINGTON PARKS AND RECREATION'S "INTEGRATED PEST MANAGEMENT PLAN (CURRENT EDITION)" FOR HERBICIDE AND PESTICIDE APPLICATION REQUIREMENTS.
16. SEE PLANTING SCHEDULE AND LANDSCAPE DETAILS FOR FURTHER REQUIREMENTS.
17. REFER TO DEMOLITION PLANS, DETAILS, AND SPECIFICATIONS FOR EROSION CONTROL MEASURES AND ADDITIONAL REQUIREMENTS.
18. REFER TO CIVIL AND DRAINAGE PLANS FOR ALL UNDERGROUND PIPE LOCATIONS.

PREPARED BY:

RUNDELL ERNSTBERGER ASSOCIATES

URBAN DESIGN / PLANNING / LANDSCAPE ARCHITECTURE
618 EAST MARKET STREET / INDIANAPOLIS, INDIANA 46202
P 317.263.0127 / REASITE.COM

PREPARED FOR:

CITY OF BLOOMINGTON

TIM STREET - DIRECTOR
CITY OF BLOOMINGTON, PARKS AND RECREATION
401 N MORTON ST, SUITE 250, BLOOMINGTON, IN 47404
P 812-349-3711 | tim.street@bloomington.in.gov

CONSULTANT:

PROJECT:

BLOOMINGTON GATEWAYS PHASE 1

BLOOMINGTON, INDIANA
BID SET
CONSTRUCTION DOCUMENTS

NORTH
0' 10' 20' 40'
SCALE: 1" = 20'

REVISIONS:

NO.	BY	DESCRIPTION	DATE
1 PR	KS	PROPOSAL REQUEST 001	05-01-2024

THE DRAWINGS, SPECIFICATIONS AND OTHER DOCUMENTS, INCLUDING THOSE IN ELECTRONIC FORM PREPARED BY REA FOR THIS PROJECT ARE INSTRUMENTS OF SERVICE, AND MAY BE USED SOLELY WITH RESPECT TO THIS PROJECT. THE DOCUMENTS MAY NOT BE REPRODUCED OR MODIFIED BY A THIRD PARTY WITHOUT FIRST OBTAINING THE EXPRESS WRITTEN CONSENT OF REA. AUTHORIZED USE OF ELECTRONIC MEDIA OR FILE DOES NOT GUARANTEE THAT THESE FILES CONTAIN COMPLETE AND ACCURATE INFORMATION. IN ORDER TO INSURE THE ACCURACY OF THE INFORMATION CONTAINED AND THAT NO CHANGES OR MODIFICATIONS HAVE BEEN MADE, THESE FILES MUST BE COMPARED TO THE PROJECT'S CONTRACT DOCUMENTS WITH STAMPED AND SEALED CERTIFICATION AND APPLICABLE APPROVED MODIFICATIONS.

DRAWING NAME:

PLANTING PLAN

CERTIFICATION:

CECIL A. PENLAND III
REGISTERED
No. 21200004
STATE OF
INDIANA
LANDSCAPE ARCHITECT

REA PROJECT #:	2022-1663
DATE:	06/07/23
DRAWN BY:	KS, KK
REVIEWED BY:	JMM

DRAWING:

LA207

© COPYRIGHT RUNDELL ERNSTBERGER ASSOCIATES, INC.

FILE: P:\1663 Bloomington Gateways Phase 1\dwg\CD\revised - Original CD\sheets\LA207 - Planting Plan

PLANT SCHEDULE

1 PR

DECIDUOUS TREES	QTY	BOTANICAL NAME	COMMON NAME	CONT	CAL	SIZE	REMARKS
AME L	2	Amelanchier laevis `JFS-Arb`	Spring Flurry® Allegheny Serviceberry	B & B	2.0" Cal		Single-stem, specimen
CER C	4	Cercis canadensis	Eastern Redbud	B & B	2.0" Cal		Tree-form
CLA K	6	Cladrastis kentukea	American Yellowwood	B & B	2.0" Cal		Prune lower branches min. 7' above finish grade.
NYS S	4	Nyssa sylvatica 'David Odom'	Afterburner® Tupelo	#15	1.5" Cal		Prune lower branches min. 7' above finish grade.
QUE A	4	Quercus alba	White Oak	B & B	2.5" Cal		Prune lower branches min. 7' above finish grade.

CONIFEROUS/EVERGREEN SHRUBS	QTY	BOTANICAL NAME	COMMON NAME	CONT	CAL	SIZE	REMARKS
JUN B	10	Juniperus horizontalis 'Wiltonii'	Blue Rug Juniper	#3		Min. 12" H	

DECIDUOUS SHRUBS	QTY	BOTANICAL NAME	COMMON NAME	CONT	CAL	SIZE	REMARKS
COR K	13	Cornus sericea 'Kelseyi'	Kelsey's Dwarf Red Twig Dogwood	#3		Min. 12" H	

ORNAMENTAL GRASS	QTY	BOTANICAL NAME	COMMON NAME	CONT	CAL	SIZE	SPACING	REMARKS
SCH S	27	Schizachyrium scoparium 'Carousel'	Carousel Little Bluestem	#1			24" o.c.	Full, healthy, well-rooted

PERENNIALS	QTY	BOTANICAL NAME	COMMON NAME	CONT				
ASC I	39	Asclepias incarnata	Swamp Milkweed	#1			18" o.c.	Full, healthy, well-rooted
BAP P	15	Baptisia x 'Purple Smoke'	Purple Smoke Wild Indigo	#1			36" o.c.	Full, healthy, well-rooted
COR L	63	Coreopsis lanceolata	Lanceleaf Tickseed	#1			18" o.c.	Full, healthy, well-rooted
DEN P	13	Dennstaedtia punctilobula	Hay-scented Fern	#1			24" o.c.	Full, healthy, well-rooted
ECH P	30	Echinacea purpurea 'Rubinstern'	Ruby Star Coneflower	#1			18" o.c.	Full, healthy, well-rooted
MON F	24	Monarda fistulosa 'Claire Grace'	Claire Grace Bergamot	#1			24" o.c.	Full, healthy, well-rooted
RUD S	55	Rudbeckia subtomentosa	Sweet Black-eyed Susan	#1			18" o.c.	
SYM R	21	Symphyotrichum oblongifolium 'Raydon's Favorite'	Raydon's Favorite Fall Aster	#1			24" o.c.	Full, healthy, well-rooted

TURF	QTY	BOTANICAL NAME	COMMON NAME	CONT	
SOD	8,347 sf	Turf Sod	HGT Bluegrass	sod	See specifications for additional requirements

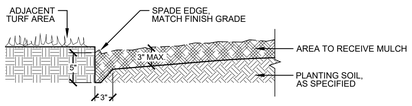

GENERAL NOTE:
ALIGN SPADE EDGE TO LINES INDICATED ON PLANS, SET STRAIGHT OR SET TO SMOOTH CURVES INDICATED. ALIGN EDGES SO AS TO MINIMIZE LARGE OPEN AREAS WITHOUT PLANT MATERIAL.

1 SPADE EDGE
NOT TO SCALE

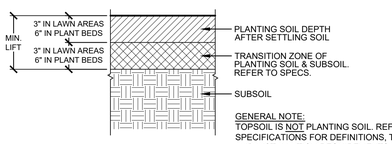

GENERAL NOTE:
TOPSOIL IS NOT PLANTING SOIL. REFER TO SPECIFICATIONS FOR DEFINITIONS, TESTING, AND INSTALLATION REQUIREMENTS.

2 PLANTING SOIL
NOT TO SCALE

GENERAL NOTE:
1. ALL PERENNIAL BEDS SHALL BE PLANTED USING TRIANGULAR PLANTING SCHEME. REFER TO PLANTING SCHEDULE FOR ON-CENTER PLANTING DIMENSION.

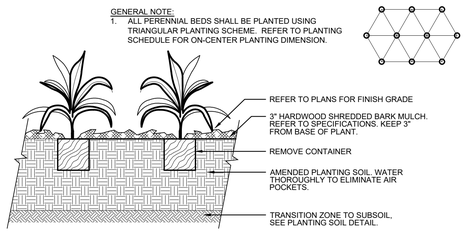

3 PERENNIAL/GROUNDCOVER/GRASSES PLANTING
NOT TO SCALE

GENERAL NOTES:
1. REMOVE THE ENTIRE WIRE BASKET, IF PRESENT.
2. REMOVE CONTAINER OR AS MUCH BURLAP, TWINE AND LACING AS POSSIBLE
3. REMOVE ALL TAGS AND LABELS.
4. **IMPORTANT:** ROOT FLARE ZONE MAY BE BELOW TOP OF BURLAPPED ROOT BALL. REMOVE ROOT BALL SOIL DOWN TO LOCATE AND EXPOSE ROOT FLARE ZONE.
5. SEE SOILS PLANS FOR DEPTH OF SOIL ASSEMBLY.

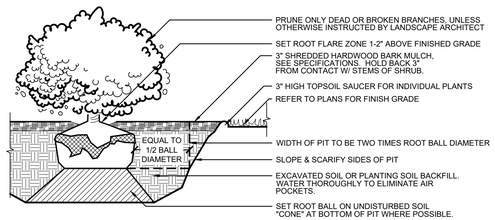

4 SHRUB PLANTING
NOT TO SCALE

GENERAL NOTES:
1. REMOVE THE ENTIRE WIRE BASKET, IF PRESENT. BEFORE TREE IS IN THE HOLE, REMOVE THE BOTTOM OF THE BASKET, CUTTING HORIZONTALLY. AFTER TREE IS IN THE HOLE, REMOVE THE REST OF THE WIRE BASKET, CUTTING VERTICALLY.
2. REMOVE TRUNK WRAP, IF PRESENT. REMOVE ALL TAGS AND LABELS.
3. IMPORTANT: ROOT FLARE ZONE MAY BE BELOW TOP OF BURLAPPED ROOT BALL. REMOVE ROOT BALL SOIL DOWN TO LOCATE AND EXPOSE ROOT FLARE ZONE.
4. TREES SHALL NOT BE FERTILIZED WITHIN THE FIRST YEAR OF PLANTING, UNLESS INSTRUCTED OTHERWISE BY THE LANDSCAPE ARCHITECT.
5. STAKING AND GUYING OF TREES WILL ONLY BE REQUIRED WHERE TREE STABILITY PROBLEMS OCCUR AS DETERMINED BY THE LANDSCAPE ARCHITECT OR ARBORIST.
   5.1. GUYING MATERIAL SHALL BE FLAT, WOVEN POLYPROPYLENE STRAPS, FASTENED TO WOOD STAKES TO ALLOW FOR TREE MOVEMENT. STAKES SHALL BE INSTALLED OUTSIDE OF ROOT BALL. ARBORTIE SYSTEM, OR ACCEPTABLE EQUIVALENT.

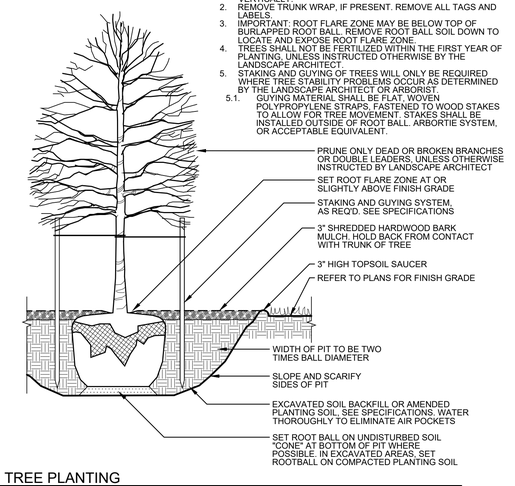

5 TREE PLANTING
NOT TO SCALE

PREPARED BY:
REA
RUNDELL ERNSTBERGER ASSOCIATES
URBAN DESIGN / PLANNING / LANDSCAPE ARCHITECTURE
618 EAST MARKET STREET / INDIANAPOLIS, INDIANA 46202
P 317.263.0127 / REASITE.COM

PREPARED FOR:
CITY OF BLOOMINGTON
TIM STREET - DIRECTOR
CITY OF BLOOMINGTON, PARKS AND RECREATION
401 N MORTON ST, SUITE 250, BLOOMINGTON, IN 47404
P 812-349-3711 | tim.street@bloomington.in.gov

CONSULTANT:

PROJECT:
BLOOMINGTON GATEWAYS PHASE 1
BLOOMINGTON, INDIANA
BID SET
CONSTRUCTION DOCUMENTS

REVISIONS:

NO.	BY	DESCRIPTION	DATE
1 PR	KS	PROPOSAL REQUEST 001	05-01-2024

THE DRAWINGS, SPECIFICATIONS AND OTHER DOCUMENTS, INCLUDING THOSE IN ELECTRONIC FORM PREPARED BY REA FOR THIS PROJECT ARE INSTRUMENTS OF SERVICE, AND MAY BE USED SOLELY WITH RESPECT TO THIS PROJECT. THE DOCUMENTS MAY NOT BE REPRODUCED OR MODIFIED BY A THIRD PARTY WITHOUT FIRST OBTAINING THE EXPRESS WRITTEN CONSENT OF REA. AUTHORIZED USE OF ELECTRONIC MEDIA OR FILE DOES NOT GUARANTEE THAT THESE FILES CONTAIN COMPLETE AND ACCURATE INFORMATION. IN ORDER TO INSURE THE ACCURACY OF THE INFORMATION CONTAINED AND THAT NO CHANGES OR MODIFICATIONS HAVE BEEN MADE, THESE FILES MUST BE COMPARED TO THE PROJECT'S CONTRACT DOCUMENTS WITH STAMPED AND SEALED CERTIFICATION AND APPLICABLE APPROVED MODIFICATIONS.

DRAWING NAME:
PLANTING SCHEDULE & DETAILS

CERTIFICATION:
CECIL A. PENLAND III
REGISTERED
No. 21200004
STATE OF INDIANA
LANDSCAPE ARCHITECT

REA PROJECT #:	2022-1663
DATE:	06/07/23
DRAWN BY:	KS, KK
REVIEWED BY:	JMM

DRAWING:
LA208

© COPYRIGHT RUNDELL ERNSTBERGER ASSOCIATES, INC.

FILE: P:\1663 Bloomington Gateways Phase 1\dwg\CD\revised - Original CD\sheets\LA207 - Planting Plan

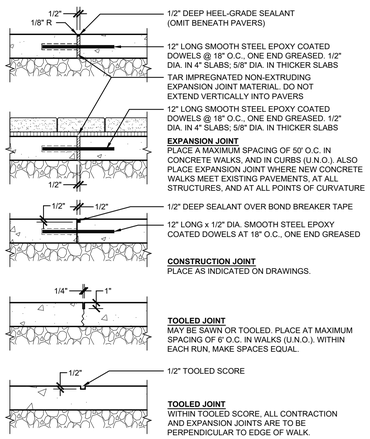

GENERAL NOTES:

1. EXPANSION JOINT MATERIAL SHALL BE "ZIP-STRIP" EXPANSION MATERIAL WITH REMOVABLE CAP BY GREENSTREAK OR APPROVED EQUAL.
2. ELIMINATE TOOL MARKS ON ALL CONCRETE SURFACES. REMOVE TROWEL MARKS ON BOTH SIDES OF ALL JOINTS AND EDGINGS, LEAVING ONLY THE RADIUS SMOOTH.
3. ALL CONTRACTION AND EXPANSION JOINTS ARE TO BE PERPENDICULAR TO EDGE OF WALK.
4. IF JOINTING IS NOT SHOWN OR NOTED ON PLANS, PROVIDE A CONCRETE JOINTING SHOP DRAWING TO LANDSCAPE ARCHITECT FOR REVIEW AND APPROVAL PRIOR TO ANY POURING.
5. ALIGN JOINTS IN CURBS AND ADJACENT WALKS.

1 CONCRETE PAVEMENT JOINTING
NOT TO SCALE

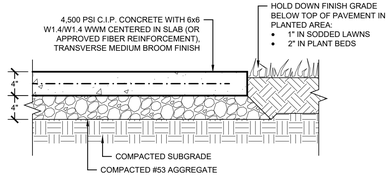

2 CONCRETE PAVEMENT, 4 INCH
SCALE: 1" - 1'-0"

REFER TO CONCRETE JOINTING DETAIL.

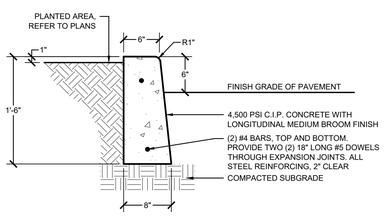

3 CONCRETE BARRIER CURB
SCALE: 1" - 1'-0"

REFER TO CONCRETE JOINTING DETAIL.

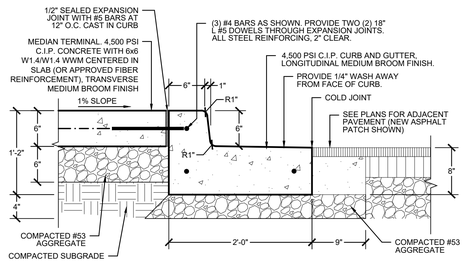

4 CONCRETE MEDIAN - CURB AND GUTTER INTERFACE
SCALE: 1" - 1'-0"

REFER TO CONCRETE JOINTING DETAIL.

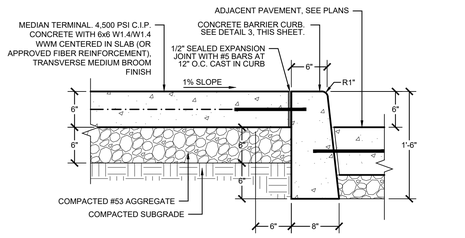

5 CONCRETE MEDIAN - BARRIER CURB INTERFACE
SCALE: 1" - 1'-0"

REFER TO CONCRETE JOINTING DETAIL.

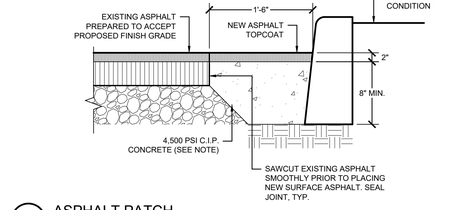

6 ASPHALT PATCH
SCALE: 1" - 1'-0"

PATCH MAY BE ASPHALT AND GRANULAR BASE TO MATCH EXISTING PAVEMENT DEPTH OR 4,500 PSI C.I.P. CONCRETE

7 ASPHALT PAVEMENT - OVERLAY
SCALE: 1" - 1'-0"

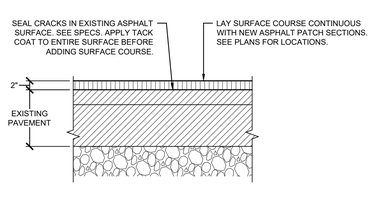

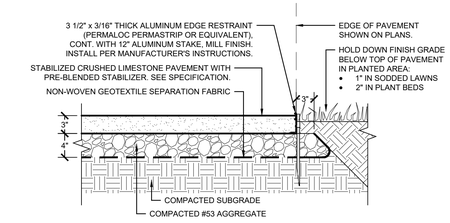

8 CRUSHED STONE PAVEMENT
SCALE: 1" - 1'-0"

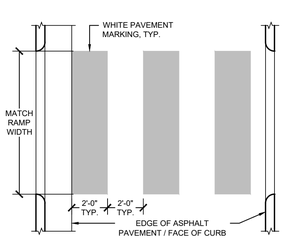

GENERAL NOTES:

1. CROSSWALK SHALL EXTEND ACROSS THE FULL WIDTH OF PAVEMENT. CENTER CROSSWALK STRIPING BETWEEN WIDTH OF PAVEMENT.
2. FACE LONGITUDINAL PAVEMENT MARKINGS PERPENDICULAR TO VEHICULAR TRAFFIC.
3. MARKINGS SHALL COMPLY WITH MANUAL ON UNIFORM TRAFFIC CONTROL DEVICES (MUTCD) STANDARDS.
4. ALL MARKINGS SHALL BE THERMOPLASTIC.

9 CROSSWALK LAYOUT
SCALE: 1/4" - 1'-0"

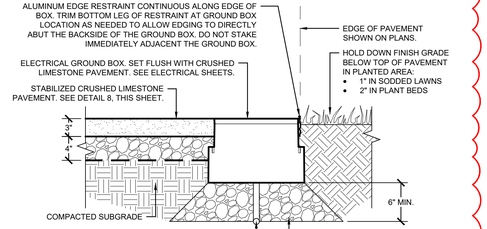

10 ELECTRICAL GROUND BOX
SCALE: 1" - 1'-0"

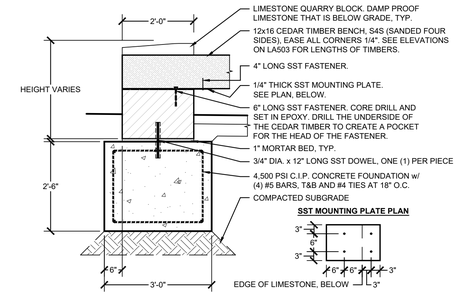

11 TIMBER BENCH - SECTION
SCALE: 1/2" = 1'-0"

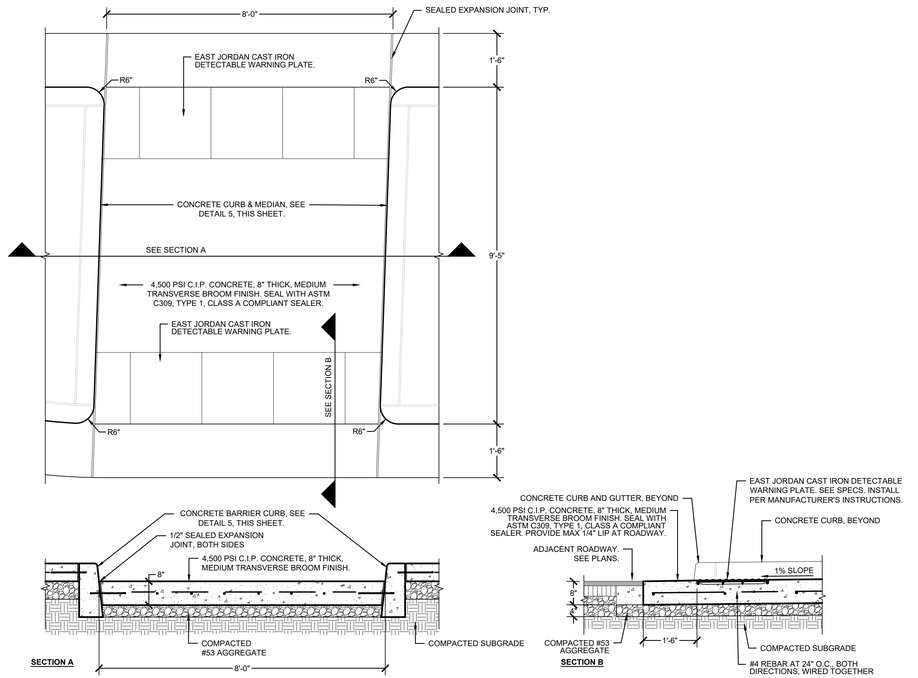

12 MEDIAN ISLAND CUT THROUGH
SCALE: 1/2" - 1'-0"

PREPARED BY:

REA
RUNDELL ERNSTBERGER ASSOCIATES
URBAN DESIGN / PLANNING / LANDSCAPE ARCHITECTURE
618 EAST MARKET STREET / INDIANAPOLIS, INDIANA 46202
P 317.263.0127 / REASITE.COM

PREPARED FOR:

CITY OF BLOOMINGTON
TIM STREET - DIRECTOR
CITY OF BLOOMINGTON, PARKS AND RECREATION
401 N MORTON ST, SUITE 250, BLOOMINGTON, IN 47404
P 812-349-3711 | tim.street@bloomington.in.gov

CONSULTANT:

PROJECT:

BLOOMINGTON GATEWAYS PHASE 1
BLOOMINGTON, INDIANA
BID SET
CONSTRUCTION DOCUMENTS

REVISIONS:

NO.	BY	DESCRIPTION	DATE
1 PR	KS	PROPOSAL REQUEST 001	05-01-2024

THE DRAWINGS, SPECIFICATIONS AND OTHER DOCUMENTS, INCLUDING THOSE IN ELECTRONIC FORM PREPARED BY REA FOR THIS PROJECT ARE INSTRUMENTS OF SERVICE, AND MAY BE USED SOLELY WITH RESPECT TO THIS PROJECT. THE DOCUMENTS MAY NOT BE REPRODUCED OR MODIFIED BY A THIRD PARTY WITHOUT FIRST OBTAINING THE EXPRESS WRITTEN CONSENT OF REA. AUTHORIZED USE OF ELECTRONIC MEDIA OR FILE DOES NOT GUARANTEE THAT THESE FILES CONTAIN COMPLETE AND ACCURATE INFORMATION. IN ORDER TO INSURE THE ACCURACY OF THE INFORMATION CONTAINED AND THAT NO CHANGES OR MODIFICATIONS HAVE BEEN MADE, THESE FILES MUST BE COMPARED TO THE PROJECT'S CONTRACT DOCUMENTS WITH STAMPED AND SEALED CERTIFICATION AND APPLICABLE APPROVED MODIFICATIONS.

DRAWING NAME:

SITE DETAILS

CERTIFICATION:

CECILIA A. PENLAND REGISTERED No. 21200004 STATE OF INDIANA LANDSCAPE ARCHITECT

REA PROJECT #:	2022-1663
DATE:	06/07/23
DRAWN BY:	KS
REVIEWED BY:	JMM

DRAWING:

LA501

© COPYRIGHT RUNDELL ERNSTBERGER ASSOCIATES, INC.

FILE: P:\1663 Bloomington Gateways Phase 1\dwg\CD\revised - Original CD\sheets\LA501 - Site Details

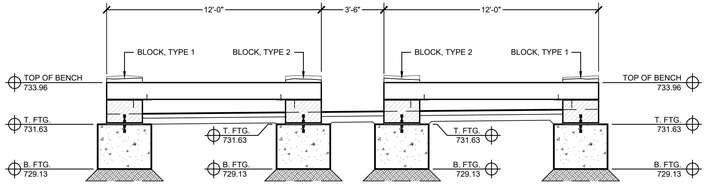

1 NORTH TIMBER BENCH - ELEVATION LOOKING NORTH
SCALE: 1/4" - 1'-0"

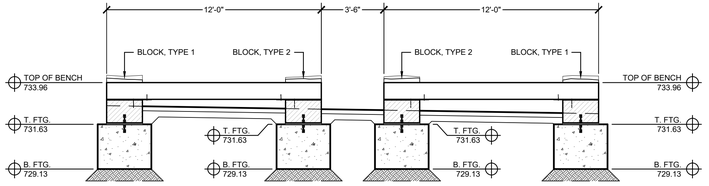

2 SOUTH TIMBER BENCH - ELEVATION LOOKING SOUTH
SCALE: 1/4" - 1'-0"

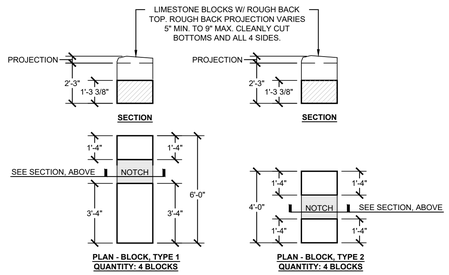

3 LIMESTONE BLOCKS FOR TIMBER BENCH
SCALE: 1/4" - 1'-0"

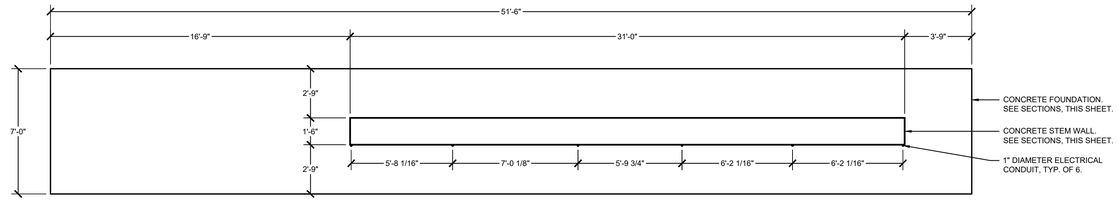

6 GATEWAY SIGN - FOUNDATION PLAN
SCALE: 1/4" - 1'-0"

NORTH

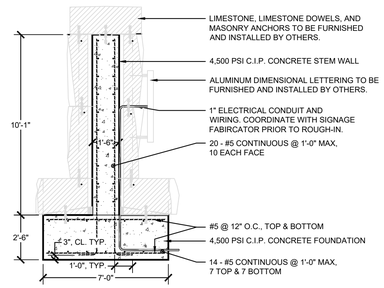

4 GATEWAY SIGN - SECTION
SCALE: 1/4" - 1'-0"

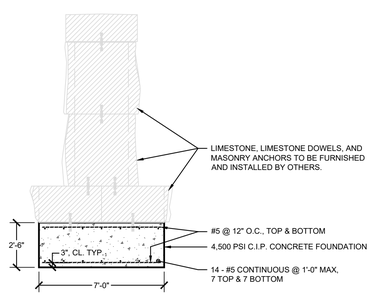

5 GATEWAY SIGN - SECTION
SCALE: 1/4" - 1'-0"

GENERAL NOTES:

1. THE GATEWAY SIGN LIMESTONE PIECES AND ALUMINUM LETTERING SHOWN ON THIS SHEET ARE FOR REFERENCE ONLY. THE LIMESTONE ELEMENTS, ALUMINUM LETTERING, AND SIGN LIGHTING WILL BE FURNISHED AND INSTALLED BY OTHERS THROUGH A SEPARATE CONTRACT.
2. THE CONTRACTOR IS RESPONSIBLE FOR THE INSTALLATION OF THE GATEWAY SIGN'S CONCRETE FOUNDATION, CONCRETE STEM WALL, ELECTRICAL CONDUITS, AND ELECTRICAL WIRING.
3. SEE ELECTRICAL SHEETS FOR MORE INFORMATION.

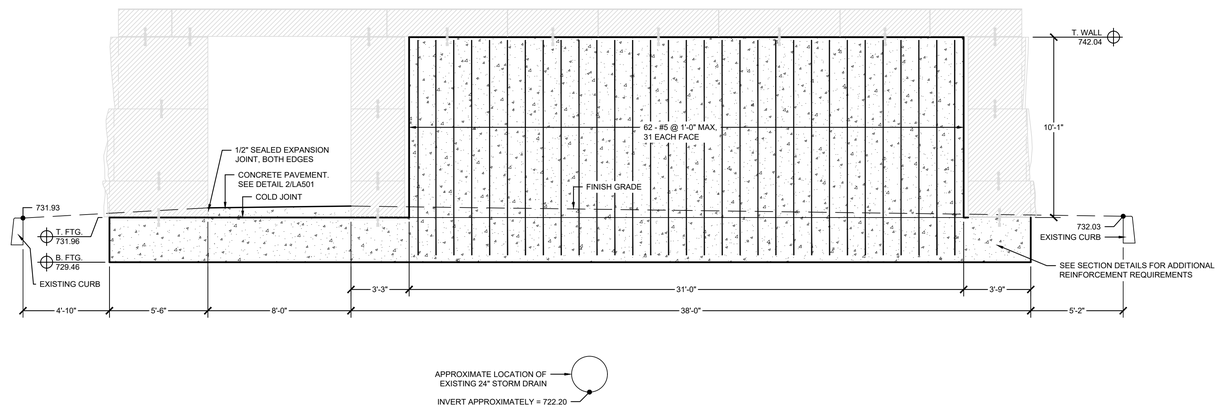

7 GATEWAY SIGN - LONGITUDINAL SECTION
SCALE: 1/4" - 1'-0"

PREPARED BY:
RUNDELL ERNSTBERGER ASSOCIATES
URBAN DESIGN / PLANNING / LANDSCAPE ARCHITECTURE
618 EAST MARKET STREET / INDIANAPOLIS, INDIANA 46202
P 317.263.0127 / REASITE.COM

PREPARED FOR:
CITY OF BLOOMINGTON
TIM STREET - DIRECTOR
CITY OF BLOOMINGTON, PARKS AND RECREATION
401 N MORTON ST, SUITE 250, BLOOMINGTON, IN 47404
P 812-349-3711 | tim.street@bloomington.in.gov

CONSULTANT:

PROJECT:

BLOOMINGTON GATEWAYS PHASE 1

BLOOMINGTON, INDIANA
BID SET
CONSTRUCTION DOCUMENTS

REVISIONS:

NO.	BY	DESCRIPTION	DATE
1 PR	KS	PROPOSAL REQUEST 001	05-01-2024

THE DRAWINGS, SPECIFICATIONS AND OTHER DOCUMENTS, INCLUDING THOSE IN ELECTRONIC FORM PREPARED BY REA FOR THIS PROJECT ARE INSTRUMENTS OF SERVICE, AND MAY BE USED SOLELY WITH RESPECT TO THIS PROJECT. THE DOCUMENTS MAY NOT BE REPRODUCED OR MODIFIED BY A THIRD PARTY WITHOUT FIRST OBTAINING THE EXPRESS WRITTEN CONSENT OF REA. AUTHORIZED USE OF ELECTRONIC MEDIA OR FILE DOES NOT GUARANTEE THAT THESE FILES CONTAIN COMPLETE AND ACCURATE INFORMATION. IN ORDER TO INSURE THE ACCURACY OF THE INFORMATION CONTAINED AND THAT NO CHANGES OR MODIFICATIONS HAVE BEEN MADE, THESE FILES MUST BE COMPARED TO THE PROJECT'S CONTRACT DOCUMENTS WITH STAMPED AND SEALED CERTIFICATION AND APPLICABLE APPROVED MODIFICATIONS.

DRAWING NAME:

SITE DETAILS

CERTIFICATION:

PATRICK R. DIERKES REGISTERED No. PE 11900841 STATE OF INDIANA PROFESSIONAL ENGINEER

REA PROJECT #:	2022-1663
DATE:	06/07/23
DRAWN BY:	KS
REVIEWED BY:	JMM

DRAWING:

1 PR

LA503

© COPYRIGHT RUNDELL ERNSTBERGER ASSOCIATES, INC.

FILE: P:\1663 Bloomington Gateways Phase 1\dwg\CD\revised - Original CDs\sheets\LA503 - Site Details

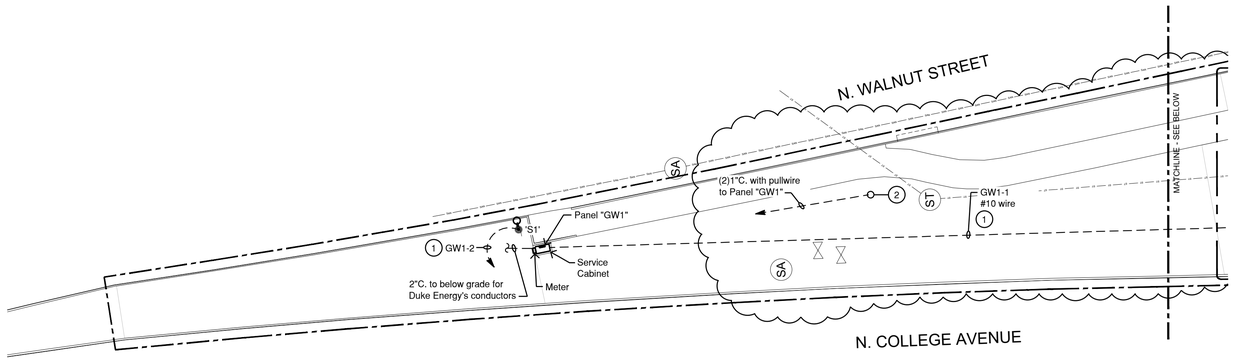

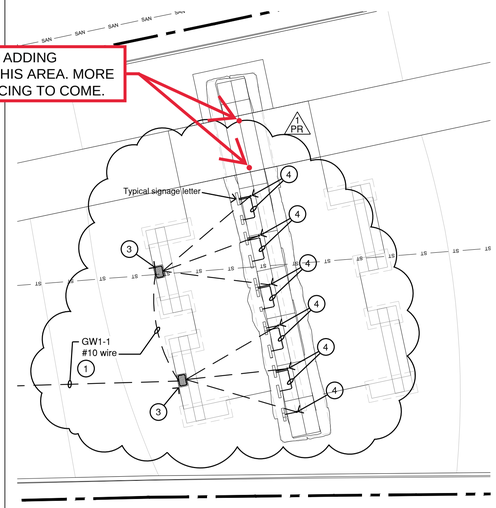

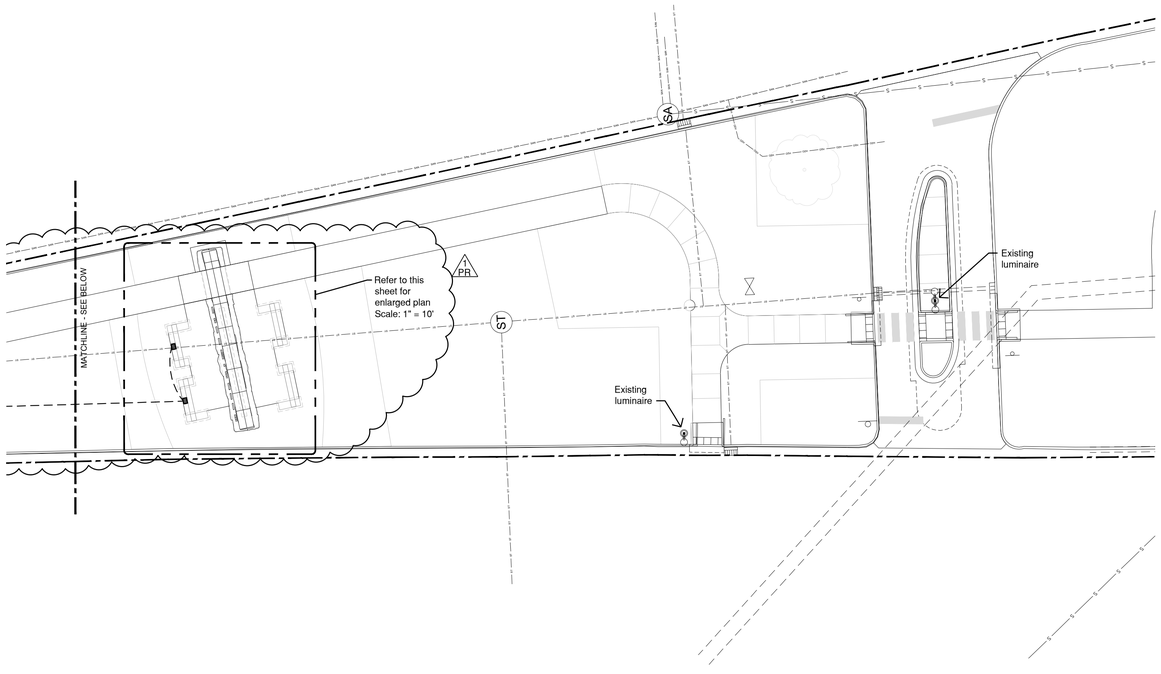

General Notes:

A. These plans indicate the general electrical scope of the project and are diagrammatic in nature. They do not represent every necessary offset, coupling, fitting, handhole, etc. It shall be the responsibility of the Contractor to visit the proposed jobsite prior to bidding and verify applicable clearances, access and constructability of equipment, and any other items that are required for the proper execution and completion of the work resulting in a code compliant, fully functioning system.

B. Contractor shall coordinate with all other trades to avoid conflicts of space.

C. Contractor shall coordinate the exact location of all devices with all other trades prior to rough-in. Exact location to be determined in the field.

D. Contractor shall coordinate with the mechanical and plumbing contractors for exact locations of equipment prior to rough-in.

E. Refer to sheet E701 for details and symbols.

F. Refer to sheet E601 for electrical schedule(s).

G. Shared neutrals shall not be permitted.

Plan Notes:

1. Circuit shall be controlled by photocell *"On"* and digital time switch *"Off"*.
2. Cap conduits with pullwire future art work location. Cap and seal weathertight for future use.
3. Provide quazite box at this location. Box to house 3 drivers and one controller for signage. Drivers and controllers by signage vendor. (1 PR)
4. From quazite box extend circuit to void in backside of signage, then vertical, then horizontal to "letter" junction box, continue from junction box back thru masonry to void and continue over to next letter. Leave 12" of excess conductors at each letter for signage connection by others. Note that routing from quazite box to sign is for a maximum of 2 letters per driver. Coordinate with signage vendor prior to rough-in. Refer to detail #4/LA503.

PREPARED BY:

RUNDELL ERNSTBERGER ASSOCIATES

URBAN DESIGN / PLANNING / LANDSCAPE ARCHITECTURE
618 EAST MARKET STREET / INDIANAPOLIS, INDIANA 46202
P 317.263.0127 / REASITE.COM

PREPARED FOR:

CITY OF BLOOMINGTON

TIM STREET - DIRECTOR
CITY OF BLOOMINGTON, PARKS AND RECREATION
401 N MORTON ST, SUITE 250, BLOOMINGTON, IN 47404
P 812-349-3711 | tim.street@bloomington.in.gov

CONSULTANT:

THE ENGINEERING COLLABORATIVE — TEC — MECHANICAL · ELECTRICAL · PLUMBING
3410 Executive Drive - Suite 100
Indianapolis, Indiana 46241
317.387.1100
www.TECMEP.com

PROJECT:

BLOOMINGTON GATEWAYS PHASE 1

BLOOMINGTON, INDIANA
BID SET
CONSTRUCTION DOCUMENTS

NORTH

0' 10' 20' 40'
SCALE: 1" = 20'

REVISIONS:

NO.	BY	DESCRIPTION	DATE
1 PR	GMH	PROPOSAL REQUEST 001	05-01-2024

THE DRAWINGS, SPECIFICATIONS AND OTHER DOCUMENTS, INCLUDING THOSE IN ELECTRONIC FORM PREPARED BY REA FOR THIS PROJECT ARE INSTRUMENTS OF SERVICE, AND MAY BE USED SOLELY WITH RESPECT TO THIS PROJECT. THE DOCUMENTS MAY NOT BE REPRODUCED OR MODIFIED BY A THIRD PARTY WITHOUT FIRST OBTAINING THE EXPRESS WRITTEN CONSENT OF REA. AUTHORIZED USE OF ELECTRONIC MEDIA OR FILE DOES NOT GUARANTEE THAT THESE FILES CONTAIN COMPLETE AND ACCURATE INFORMATION. IN ORDER TO INSURE THE ACCURACY OF THE INFORMATION CONTAINED AND THAT NO CHANGES OR MODIFICATIONS HAVE BEEN MADE, THESE FILES MUST BE COMPARED TO THE PROJECT'S CONTRACT DOCUMENTS WITH STAMPED AND SEALED CERTIFICATION AND APPLICABLE APPROVED MODIFICATIONS.

DRAWING NAME:

ELECTRICAL SITE PLAN

CERTIFICATION:

SAMUEL L. HURT
REGISTERED
No.
PE10100876
STATE OF
INDIANA
PROFESSIONAL ENGINEER

REA PROJECT #:	2022-1663
DATE:	06/07/23
DRAWN BY:	ALB
REVIEWED BY:	SLH

DRAWING:

E201

© COPYRIGHT RUNDELL ERNSTBERGER ASSOCIATES, INC.

FILE: Y:\2023\23033 - Bloomington Gateway\6.0 Drawings\Plans\23033 - E201

Light Fixture Schedule

Type	Manufacturer	Model No.	Lamp Type	Voltage	Mounting	Description	Notes
'S1'	Architectural Area Lighting (luminaire) Lumec (pole)	FLEX2-72L-700-4K7-5Q-CL-xxx-SC5-UNV -	LED / 4000K	120	Pole	Architectural LED area lighter. Single curved arm mount. Type V Square distribution. 20' straight, smooth aluminum pole (5" diameter) with decorative base. Wet location listed. Finish/color to be selected by Architect.	

Notes:
1. *Not used.*
2. *Emergency backup: minimum of 90 minute runtime for emergency operation.*
3. *0-10V LED dimming driver. Provide Manufacturer approved compatible dimmer where applicable (refer to lighting plans for dimmer location[s]).*
4. *Provide all connections as required by the Manufacturer. Verify exact quantities of all system components prior to ordering. Install all system components per Manufacturer's requirements.*

Panel "GW1"

Voltage: 120/240
Amps: 100
Phase: 1
Wire: 3

Main: 100 Amp Main Circuit Breaker
Bus: Copper
Mounting: Surface (Cabinet)
Location: Panel Enclosure

Remarks	<Load (KW)> Light	Rec.	Heat	A/C	Equip.	Other	Cir. No.	20 AMP 1 Pole U.O.N.	Cir. No.	<Load (KW)> Other	Equip.	A/C	Heat	Rec.	Light	Remarks
1 PR																
Gateway Signage	.6						1		2						.2	Site Lighting
Spare							3		4							Spare
Spare							5		6							Spare
Spare							7		8							Spare
Spare							9		10							Spare
Spare							11		12							Spare
Space							13		14							Space
Space							15		16							Space
Space							17		18							Space
Space							19		20							Space
	.6						Connected load (KW)								.2	
	.6						Demand load (KW)								.2	

Legend	Total Demand (KW)							Feeder	Calculated ±
= 1 Pole = 2 Pole = 3 Pole	Light	Rec.	Heat	A/C	Equip.	Other	Total	Fed From: Wire Size: Conduit:	Total Demand Amps = 4±
	.8						.8		

Note:
Coordinate electrical service with local utility company prior to bid.
Include all work in bid not performed by utility company.

Contact:
Cameron West
Duke Energy

Bloomington, IN
C: 812.340.8107
E: Cameron.West@duke-energy.com

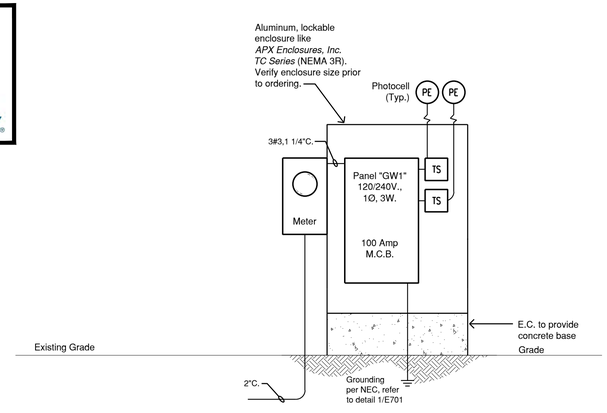

1 ELECTRICAL RISER DIAGRAM
SCALE: NONE

PREPARED BY:
REA
RUNDELL ERNSTBERGER ASSOCIATES
URBAN DESIGN / PLANNING / LANDSCAPE ARCHITECTURE
618 EAST MARKET STREET / INDIANAPOLIS, INDIANA 46202
P 317.263.0127 / REASITE.COM

PREPARED FOR:
CITY OF BLOOMINGTON
TIM STREET - DIRECTOR
CITY OF BLOOMINGTON, PARKS AND RECREATION
401 N MORTON ST, SUITE 250, BLOOMINGTON, IN 47404
P 812-349-3711 | tim.street@bloomington.in.gov

CONSULTANT:
THE ENGINEERING COLLABORATIVE
TEC

PROJECT:
BLOOMINGTON GATEWAYS PHASE 1
BLOOMINGTON, INDIANA
BID SET
CONSTRUCTION DOCUMENTS

REVISIONS:

NO.	BY	DESCRIPTION	DATE
1 PR	GMH	PROPOSAL REQUEST 001	05-01-2024

THE DRAWINGS, SPECIFICATIONS AND OTHER DOCUMENTS, INCLUDING THOSE IN ELECTRONIC FORM PREPARED BY REA FOR THIS PROJECT ARE INSTRUMENTS OF SERVICE, AND MAY BE USED SOLELY WITH RESPECT TO THIS PROJECT. THE DOCUMENTS MAY NOT BE REPRODUCED OR MODIFIED BY A THIRD PARTY WITHOUT FIRST OBTAINING THE EXPRESS WRITTEN CONSENT OF REA. AUTHORIZED USE OF ELECTRONIC MEDIA OR FILE DOES NOT GUARANTEE THAT THESE FILES CONTAIN COMPLETE AND ACCURATE INFORMATION. IN ORDER TO INSURE THE ACCURACY OF THE INFORMATION CONTAINED AND THAT NO CHANGES OR MODIFICATIONS HAVE BEEN MADE, THESE FILES MUST BE COMPARED TO THE PROJECT'S CONTRACT DOCUMENTS WITH STAMPED AND SEALED CERTIFICATION AND APPLICABLE APPROVED MODIFICATIONS.

DRAWING NAME:
ELECTRICAL RISER DIAGRAM & SCHEDULES

CERTIFICATION:
SAMUEL L. HURT
REGISTERED
No.
PE10100876
STATE OF
INDIANA
PROFESSIONAL ENGINEER

REA PROJECT #: 2022-1663
DATE: 06/07/23
DRAWN BY: ALB
REVIEWED BY: SLH

DRAWING:
E601

© COPYRIGHT RUNDELL ERNSTBERGER ASSOCIATES, INC.

FILE: Y:\2022\223033 - Bloomington Gateway\6.0 Drawings\Plans\223033 - E601

Board of Public Works
Staff Report

Project/Event:	Permit extension request for City-wide Fiber Project
Staff Representative:	Alex Gray
Petitioner/Representative:	Bret Simons / Jerrod Gabriel
Date:	July 30th, 2024

Report: AEG is requesting an extension to their previously approved permit for the S Leonard Springs Rd area that is between W Cedar Chase Dr and W Tapp Rd. The extension is being requested for boring, splicing, and fiber pull as the project schedule was altered with this phase being moved to later in the schedule then its previously approved section in March 2024. The work will include mostly aerial work and include periodic lane closures along Leonard Springs Rd. The project is expected to be complete by December 9th, 2024.

P.O. Box 349 | Buford, Georgia 30515
Main Office: (706)654-2298
www.aeg.cc

To: City of Bloomington – Engineering Department

Subject: City of Bloomington Right of Way Application

Dear Board Members,

Atlantic Engineering Group is planning a large FTTH project across the entire City of Bloomington. This work will take place at different locations throughout the year. In order to facilitate these up coming projects, AEG is respectfully requesting access to the ROW as planned out in the submitted permits.

Weekday hours will be from 8-4pm. Hours Saturday will be from 8-3pm. This will only be restoration, splicing and/or cable pulling. School zone hours will be from 8:30-2:30pm.

Traffic control plans will be attached to each permit. No long-term road closures or sidewalk closures are expected. Signs and flaggers will be present when needed and move with the project as it moves throughout the city. The areas will all be identified on the plans we submit to the cities Engineering Department.

Proper door hangers will be placed prior to the construction starting in a particular area. The door hangers will provide information about the construction and contact information if any issues arise.

Bret Simons
Engineering Project Coordinator
Atlantic Engineering Group

P.O. Box 349 | Buford, Georgia 30515
Main Office: (706)654-2298
www.aeg.cc

To: City of Bloomington – Engineering Department

Subject: City of Bloomington Right of Way Application Extension

Dear Board Members,

AEG is respectfully requesting an extension to access the ROWs on expired permits in the city.

We are asking for extensions on the following permits. We were unable to finish or start work in these areas due to unforeseen circumstances (Pole Co-op not responding in a timely manner and Weather). All work will be completed in these areas by December 9th, 2024.

BLW01a-F07_N Daniels Way
BLW01a-F02_S Leonard Springs Rd

Bret Simons
Engineering Permit Team Lead
Atlantic Engineering Group

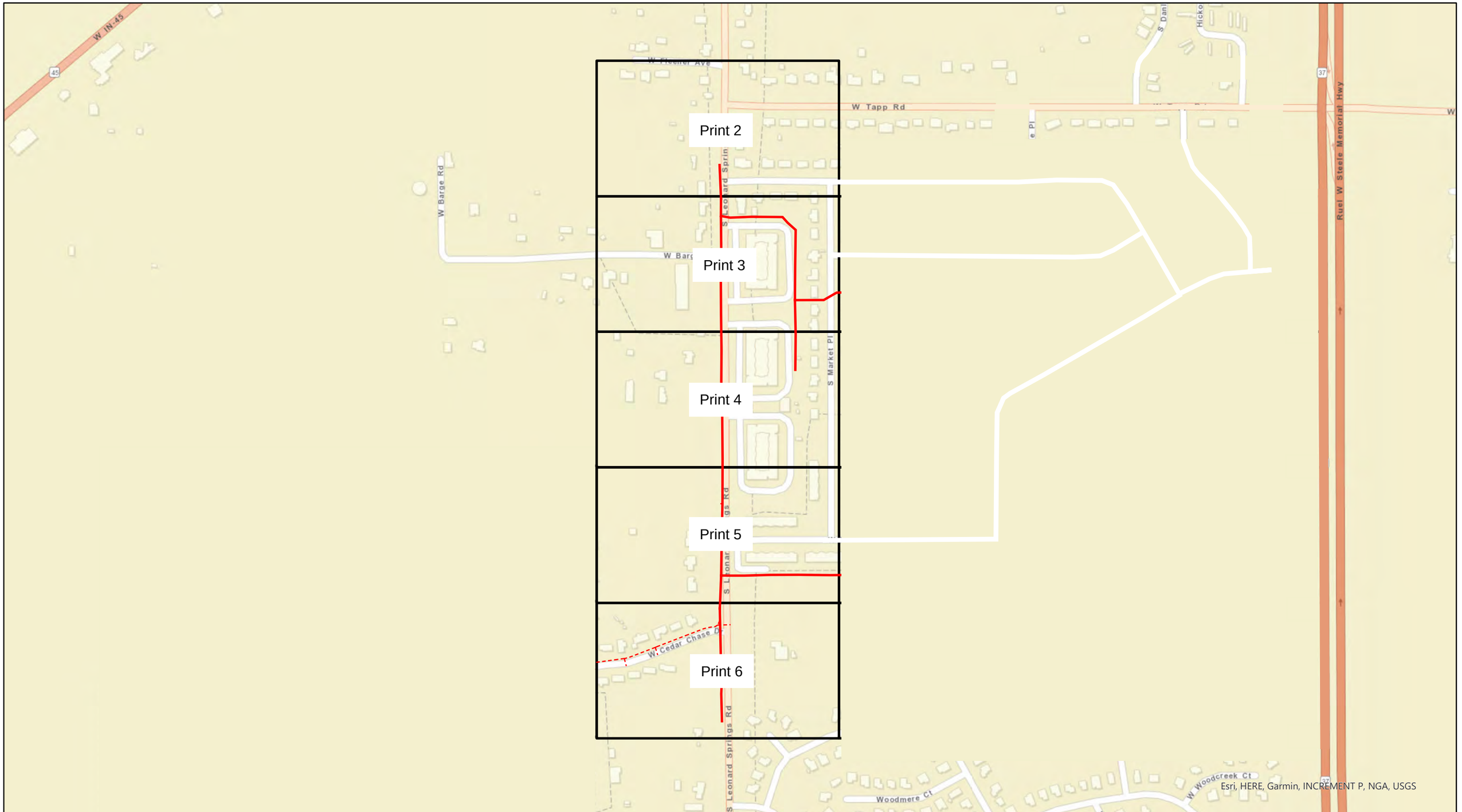

AEG

0 265 530 1,060 Feet

Legend BLW01a-F02_S Leonard Springs Rd

- Proposed Aerial
- Conduit
- Grids

N

City of Bloomington, IN Permit:
Design View

INI	BY	DATE	DESCRIPTION

Indiana811

4035 W FLEENER AVE

4025 W FLEENER AVE

4027 W FLEENER AVE

2738 S LEONARD SPRINGS RD

2740 S LEONARD SPRINGS RD

2747 S LEONARD SPRINGS RD

3910 W TAPP RD

3920 W TAPP RD

3930 W TAPP RD

3950 W TAPP RD

2750 S LEONARD SPRINGS RD

W Tapp RD

3931 W TAPP RD

3921 W TAPP RD

3911 W TAPP RD

3901 W TAPP RD

2801 S LEONARD SPRINGS RD

2808 S LEONARD SPRINGS RD

S Leonard Springs RD

2811 S LEONARD SPRINGS RD

2810 S LEONARD SPRINGS RD

3942 W FAIRINGTON DR

3932 W FAIRINGTON DR

3922 W FAIRINGTON DR

3912 W FAIRINGTON DR

3842 W FAIRINGTON DR

3902 W FAIRINGTON DR

23 '

Continues into BLW01a-F03_ W Barge Rd Permit

60 '

W Fairington DR

149'

2820 S LEONARD SPRINGS RD

23 '

3921 W FAIRINGTON DR

S Market PL

AEG

0 20 40 80 Feet

Legend

- Poles
- Vaults
- Overhead Strand
- Conduit
- Risers
- Address
- Anchor
- Sidewalk
- Bloomington_Parcels
- Grids

All Flowerpots 12" DIA

N

City of Bloomington, IN Permit: Design View

INI	BY	DATE	DESCRIPTION

Indiana 811

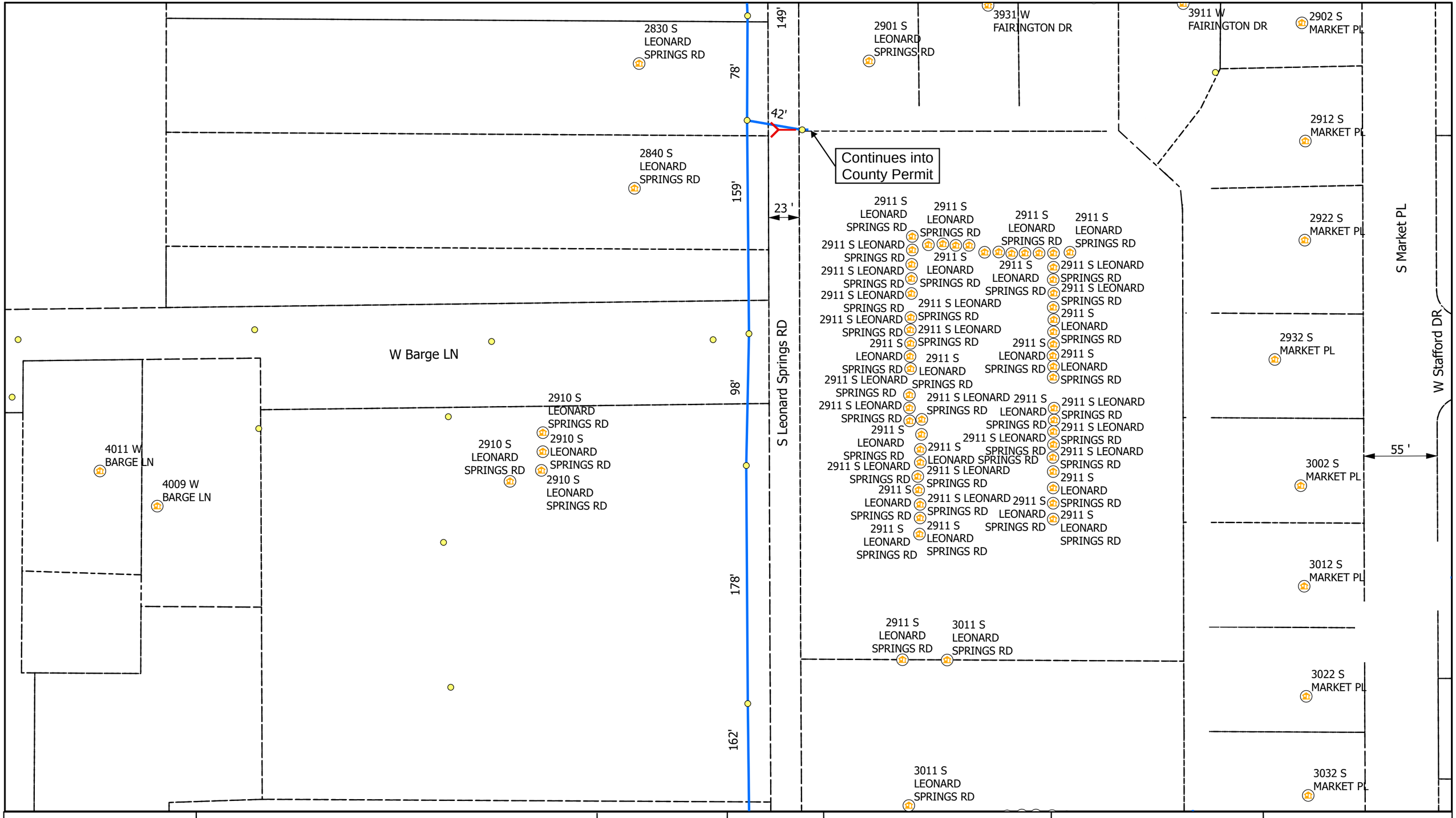

AEG

0 20 40 80 Feet

Legend

- Poles
- Vaults
- Overhead Strand
- Conduit
- Risers
- Address
- Anchor
- Sidewalk
- Bloomington_Parcels
- Grids

All Flowerpots 12" DIA

N

City of Bloomington, IN Permit: Design View

INI	BY	DATE	DESCRIPTION

Indiana811

4005 W
BARGE LN

2920 S
LEONARD
SPRINGS RD

2930 S
LEONARD
SPRINGS RD

3010 S
LEONARD
SPRINGS RD

3020 S
LEONARD
SPRINGS RD

162'

141'

151'

193'

200'

23 '

V

17x30x24

65'

S Leonard Springs RD

3111 S
LEONARD
SPRINGS RD

3203 S
MARKET PL

3102 S
MARKET PL

3116 S
MARKET PL

3112 S
MARKET PL

3122 S
MARKET PL

3132 S
MARKET PL

S Market PL

3142 S
MARKET PL

3214 S
MARKET PL

3214 S
MARKET PL

3214 S
MARKET PL

3214 S MARKET PL

AEG

0 20 40 80 Feet

Legend

- Poles
- Vaults
- Overhead Strand
- Conduit
- Risers
- Address
- Anchor
- Sidewalk
- Bloomington_Parcels
- Grids

All Flowerpots 12" DIA

N

City of Bloomington, IN Permit:
Design View

INI	BY	DATE	DESCRIPTION

Indiana811

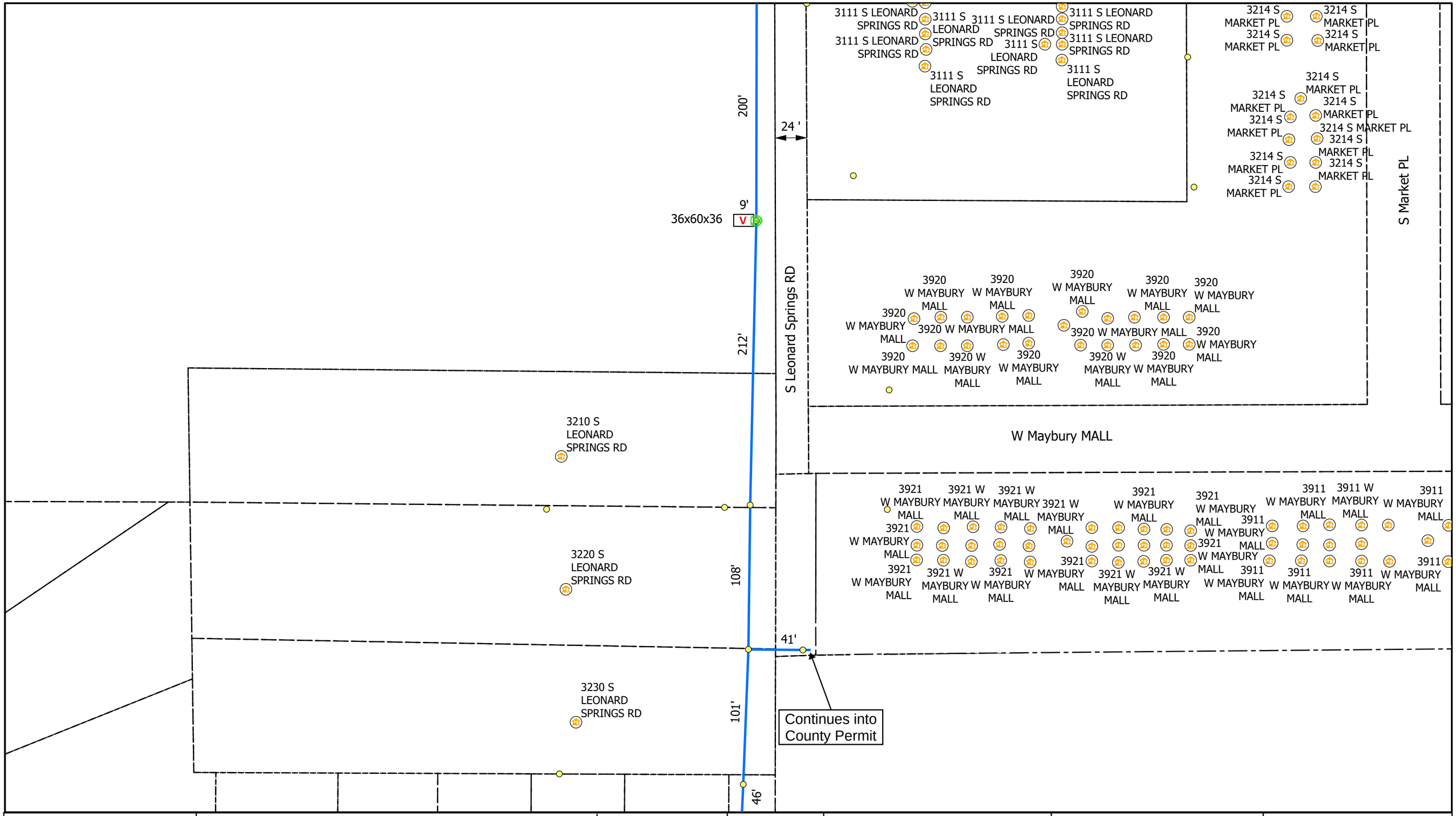
3111 S LEONARD SPRINGS RD
3111 S LEONARD SPRINGS RD
3111 S LEONARD SPRINGS RD
3111 S LEONARD SPRINGS RD
3111 S LEONARD SPRINGS RD
3111 S LEONARD SPRINGS RD
3111 S LEONARD SPRINGS RD
3214 S MARKET PL
3214 S MARKET PL
3214 S MARKET PL
3214 S MARKET PL
3214 S MARKET PL
3214 S MARKET PL
3214 S MARKET PL
3214 S MARKET PL
3214 S MARKET PL
3214 S MARKET PL
3214 S MARKET PL
3214 S MARKET PL
3214 S MARKET PL
3214 S MARKET PL
200'
24 '
9'
36x60x36
V
S Leonard Springs RD
S Market PL
3920 W MAYBURY MALL
W Maybury MALL
212'
3210 S LEONARD SPRINGS RD
3921 W MAYBURY MALL
3220 S LEONARD SPRINGS RD
108'
41'
3230 S LEONARD SPRINGS RD
101'
Continues into County Permit
46'
0 20 40 80 Feet
Legend
Poles
Vaults
Overhead Strand
Conduit
Risers
Address
Anchor
Sidewalk
Bloomington_Parcels
Grids
All Flowerpots 12" DIA
N
City of Bloomington, IN Permit:
Design View
INI
BY
DATE
DESCRIPTION
Indiana811

Print 5 of 6

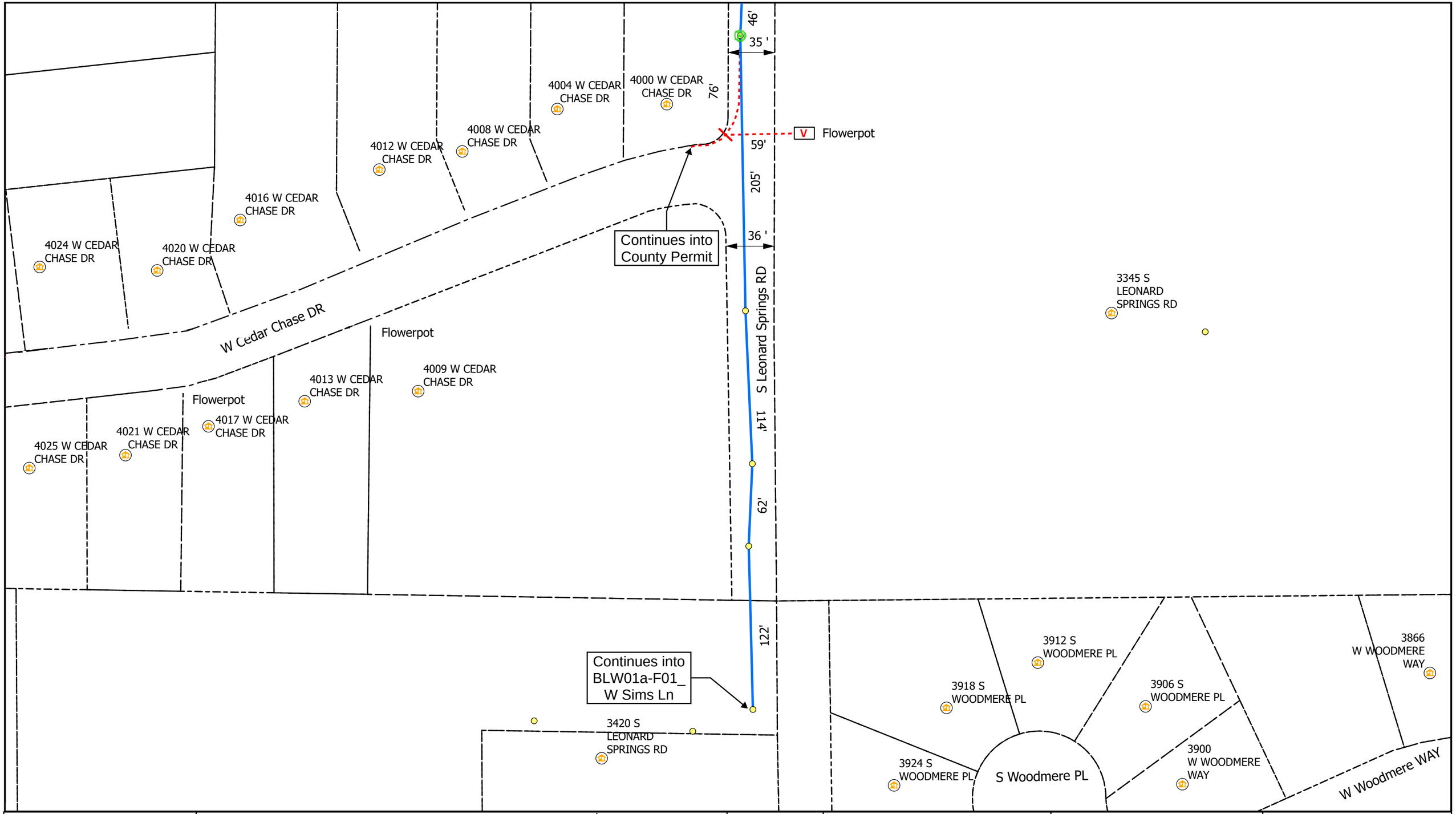

AEG

0 20 40 80 Feet

Legend

- Poles
- Vaults
- Overhead Strand
- Conduit
- Risers
- Address
- Anchor
- Sidewalk
- Bloomington_Parcels
- Grids

All Flowerpots 12" DIA

N

City of Bloomington, IN Permit: Design View

INI	BY	DATE	DESCRIPTION

Indiana 811

RUS Listed

Carlon® PV-Mold® Nonmetallic Pole Riser System

Carlon PV-Mold is a nonmetallic pole riser system designed to protect communications power cable installed on poles.

Features:

- Meets or exceeds requirements outlined in the National Electric Safety Code (NESC).
- Designed in accordance with NEMA TC-19 specifications.
- Ultraviolet, cold temperature and corrosive atmosphere resistant.
- Schedule 40 wall meets Schedule 80 PVC conduit impact requirements per NEMA TC-19.
- No grounding required.
- Belled end fits over each added section or conduit.
- Flame retardant.
- Requires no maintenance.
- PV-Mold acts as an insulator against electrical shock.
- Interchangeable parts and accessories to match the needs of specific requirements.

Steel U-Guard requires grounding strapping and does not have belled ends.

PV-Mold has belled ends, flanged design and does not require grounding.

Standard Duty

Part No.	Size	Std. Ctn. Qty.	Std. Ctn. Wt. (lbs.)	Dimensions A	B	C	H	Actual Impact @ 0°C 20 Pound Tup
59208N	1"	294	1059	0.100"	1 5/8"	2 3/8"	1 5/8"	40 Ft.-Lbs.
59211N	2"	136	726	0.100"	2 3/8"	4 1/2"	2 3/8"	100 Ft.-Lbs.
59211X (5' length)	2"	136	363	0.100"	2 3/8"	4 1/2"	2 3/8"	100 Ft.-Lbs.
59213N	3"	66	761	0.150"	3 1/2"	6"	3 1/2"	110 Ft.-Lbs.
59213X (5' length)	3"	66	381	0.150"	3 1/2"	6"	3 1/2"	100 Ft.-Lbs.
59215N	4"	65	910	0.150"	4 1/2"	6 1/2"	4 1/2"	110 Ft.-Lbs.
59216N	5"	30	515	0.150"	5 1/2"	7 1/2"	5 1/2"	110 Ft.-Lbs.

Heavy Duty Schedule 40

59010N	1 1/2"	200	1142	0.145"	1 29/32"	3 1/2"	1 29/32"	100 Ft.-Lbs.
59011N	2"	136	1214	0.154"	2 3/8"	4 1/2"	2 3/8"	150 Ft.-Lbs.
59013N	3"	66	937	0.216"	3 1/2"	6"	3 9/32"	150 Ft.-Lbs.
59015N	4"	65	1621	0.237"	4 1/2"	6 1/2"	4 1/2"	260 Ft.-Lbs.
59015X (5' length)	4"	65	707	0.237"	4 1/2"	6 1/2"	4 1/2"	260 Ft.-Lbs.
59016N	5"	30	870	0.258"	5 1/2"	7 1/2"	5 1/2"	260 Ft.-Lbs.
59017N	6"	30	1160	0.280"	6 5/8"	8 3/4"	6 5/8"	260 Ft.-Lbs.

Extra Heavy Duty Schedule 80

59411N	2"	136	1549	0.218"	2 3/8"	4 1/2"	2 3/8"	300 Ft.-Lbs.
59413N	3"	66	1495	0.030"	3 1/2"	6"	3 1/2"	525 Ft.-Lbs.

Flanged Overall Length 10 Feet, Including Bell

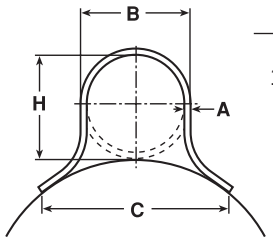

Size	Depth of Bell
1"	2 - 2 1/4"
1 1/2"	2 - 2 1/4"
2"	2 - 2 1/4"
3"	3 - 3 1/4"
4"	4 - 4 1/4"
5"	4 - 4 1/2"
6"	5 - 5 1/2"

Slots are 1/2" from side to side, and allow for expansion and contraction.

Slot Dimensions: for sizes 2" through 6" are 5/16" wide, 3/4" long.

Slot Dimensions: for 1" and 1 1/2" are 3/16" wide, 3/4" long.

Slot Spacing: 18" from center, beginning 6" from end.

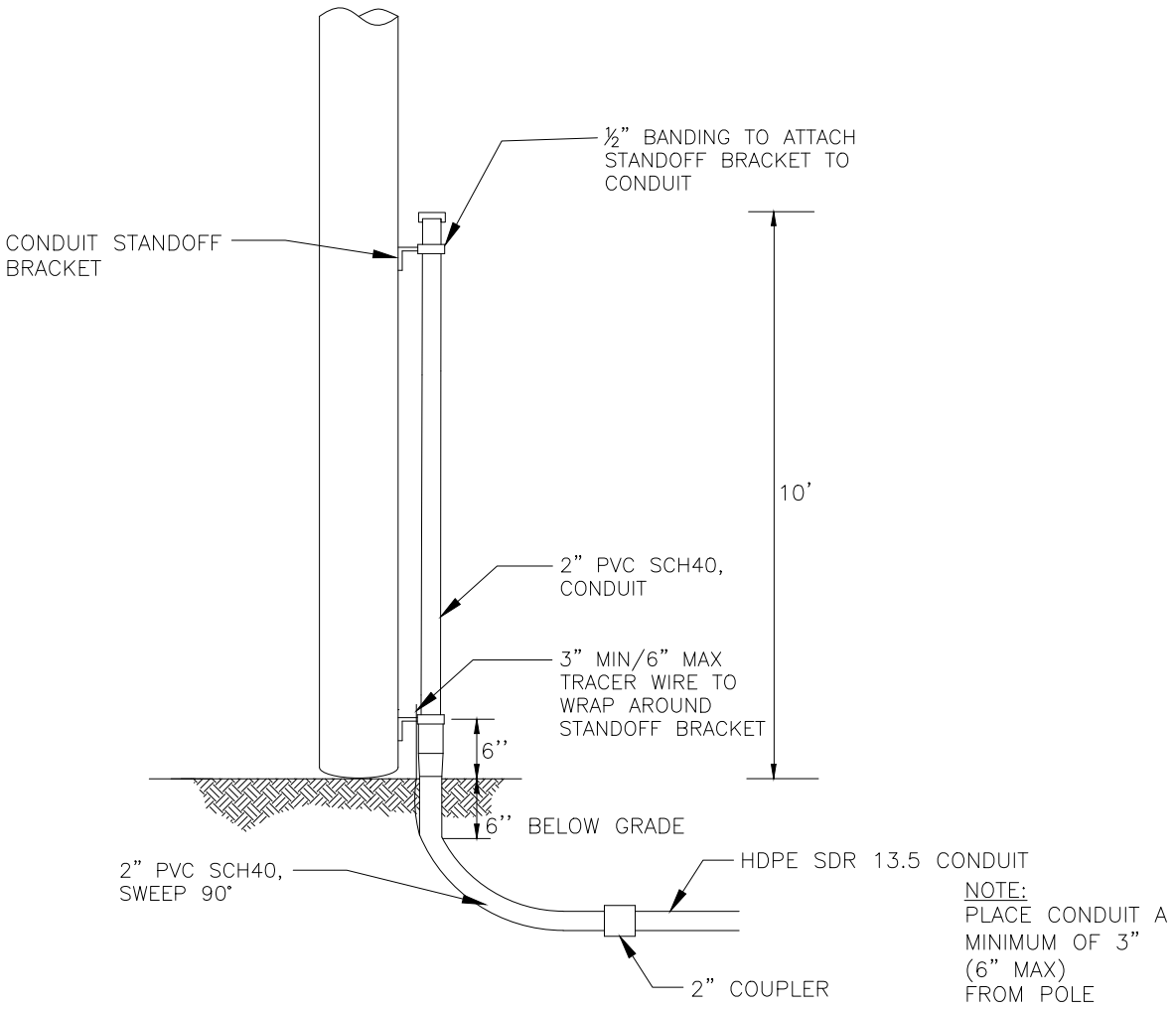

DESCRIPTION	QTY	MANUFACTURER (PREFERRED)	PART #
SCREW, LAG, 1/2" x 4-1/2"	10		
HDPE SDR 13.5 CONDUIT, VARIOUS SIZES	N/A		
2" PVC SCH40, RISER PIPE	1		
#12 TRACER WIRE	N/A		
2" PVC SCH40, SWEEP, 90 DEG	1		
CONDUIT STANDOFF BRACKET	VARIES		
CONDUIT STRAP KIT	VARIES		
2" COUPLER	1		

AEG

DATE: 02/03/2022
REVISION: CLM

SCALE: NTS

TYPICAL RISER CONDUIT WOOD POLE

(R2-W)

CONCEPTUAL SIDE VIEW

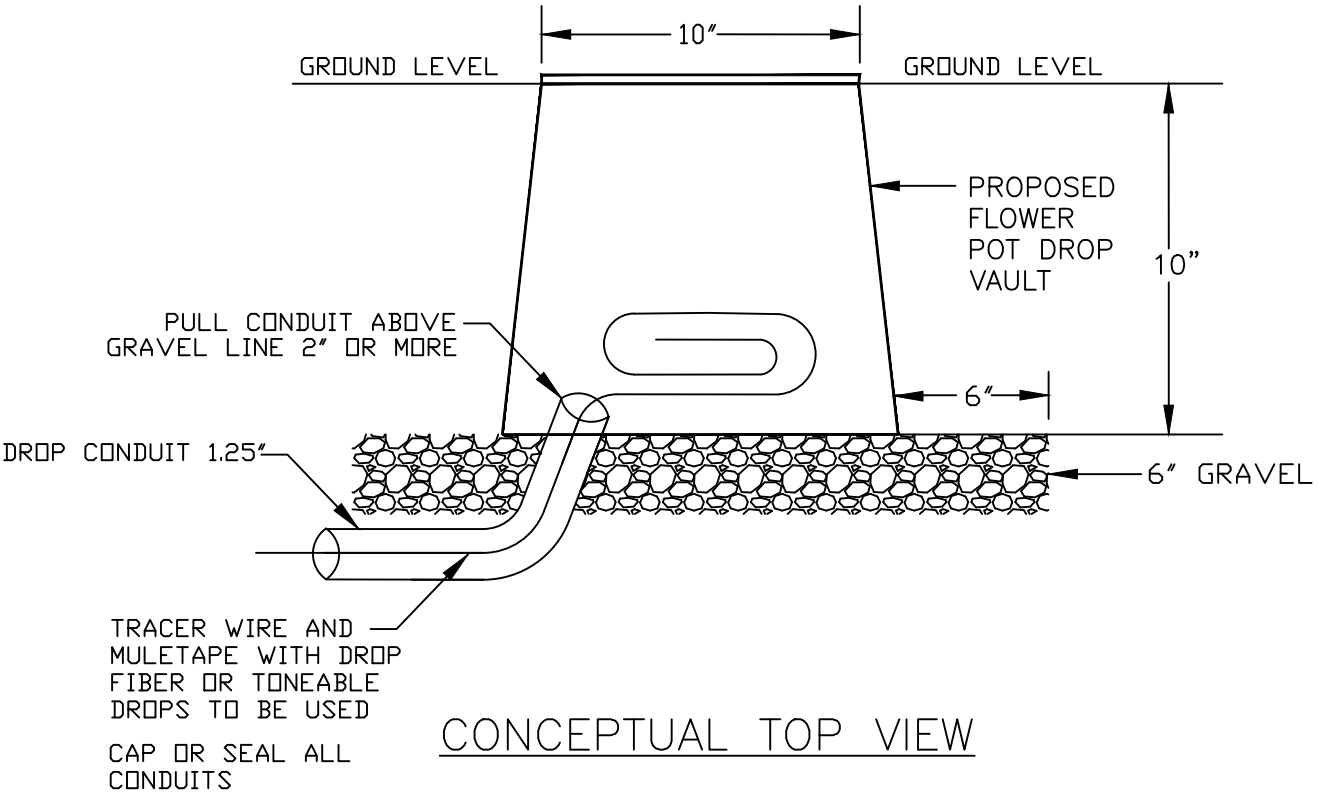

CONCEPTUAL TOP VIEW

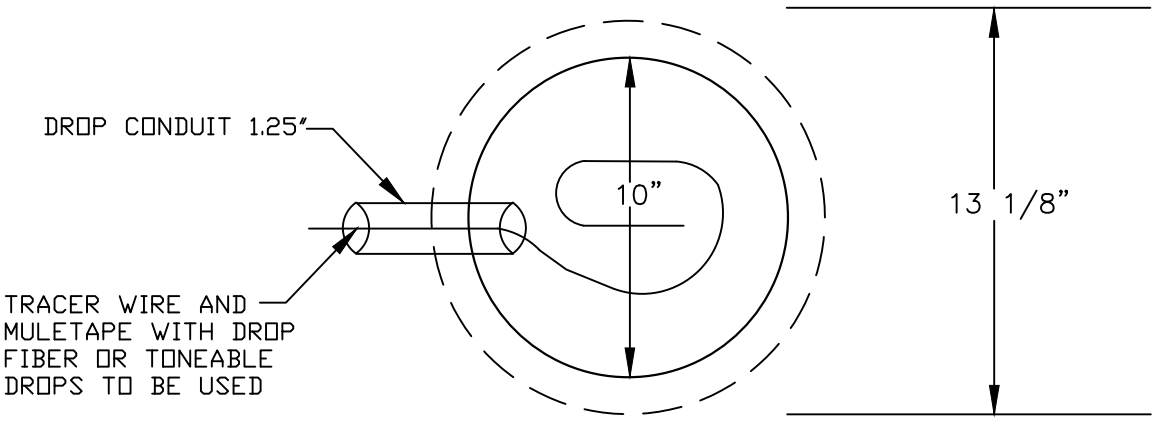

AEG

DATE: 02/02/2022
REVISION: CLM

SCALE: NTS

FLOWER POT

30”x48” PC UNIT, 2PC TIER 15/22

18”, 24”, and 36” HEIGHT

APC

AMERICAN POLYMER COMPANY

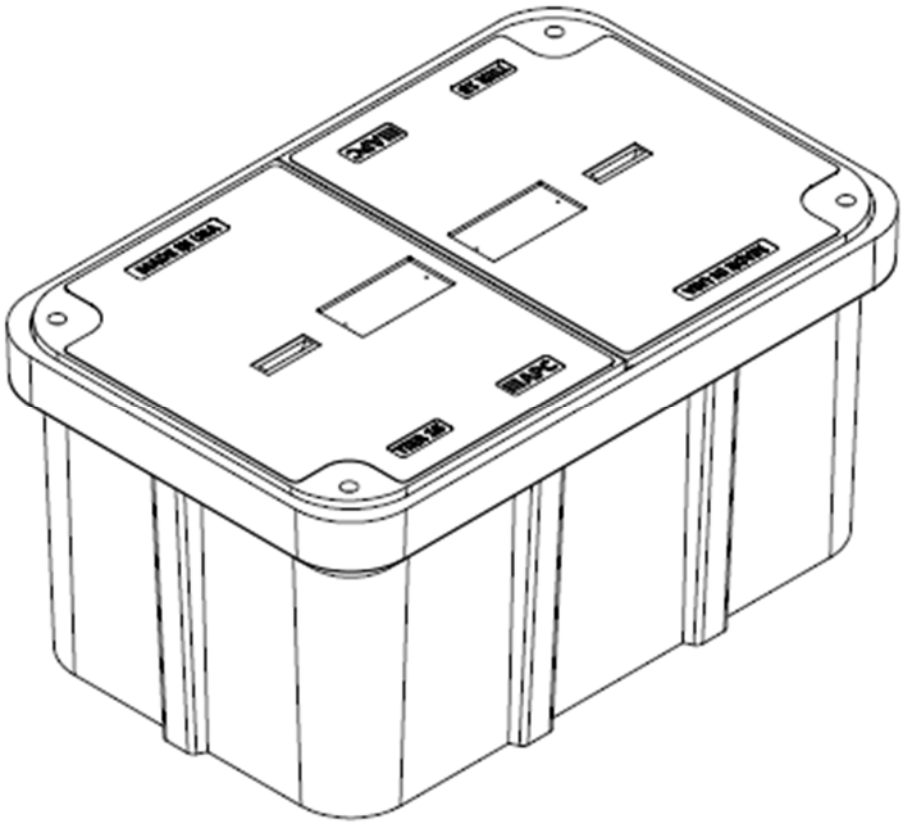

Description	Nominal Size	ANSI Tier	Part Number	Estimated Weight
PC Unit – TIER 15	30”x48”x18”	Tier 15	P304818HU15...	460 lbs.
PC Unit – TIER 22	30”x48”x18”	Tier 22	P304818HU22...	525 lbs.
PC Unit – TIER 15	30”x48”x24”	Tier 15	P304824HU15...	510 lbs.
PC Unit – TIER 22	30”x48”x24”	Tier 22	P304824HU22...	575 lbs.
PC Unit – TIER 15	30”x48”x36”	Tier 15	P304836HU15...	615 lbs.
PC Unit – TIER 22	30”x48”x36”	Tier 22	P304836HU22...	680 lbs.

PROUDLY MADE IN USA

www.apcunderground.com

30”x48” PC UNIT, 2PC TIER 15/22

18”, 24”, and 36” HEIGHT

APC

AMERICAN POLYMER COMPANY

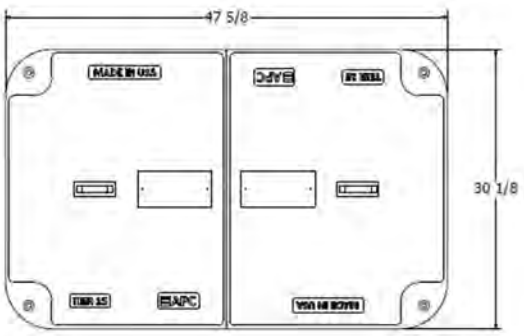

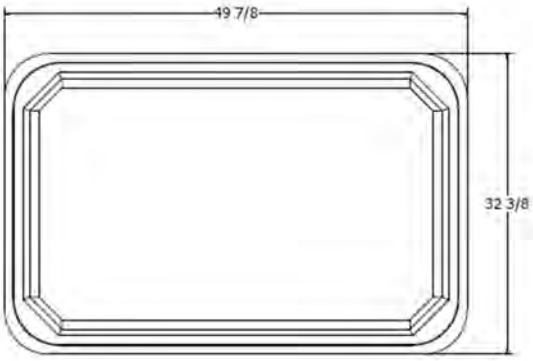

Components	Nominal Size	ANSI Tier	Part Number	Estimated Weight
Replacement Box	30”x48”x18”	Tier 22	P304818B22	185 lbs.
Replacement Box	30”x48”x24”	Tier 22	P304824B22	235 lbs.
Replacement Box	30”x48”x36”	Tier 22	P304836B22	340 lbs.
Replacement Lids – T15	30”x48” (half)	Tier 15	Various	150 lbs.
Replacement Lids – T22	30”x48” (half)	Tier 22	Various	170 lbs.

Bolt options

Hex Head

Machine Thread

Penta Head

Auger Thread

PROUDLY MADE IN USA

www.apcunderground.com

24”x36” PC UNIT, TIER 15/22

18”, 24”, 30”, and 36” HEIGHT

APC

AMERICAN POLYMER COMPANY

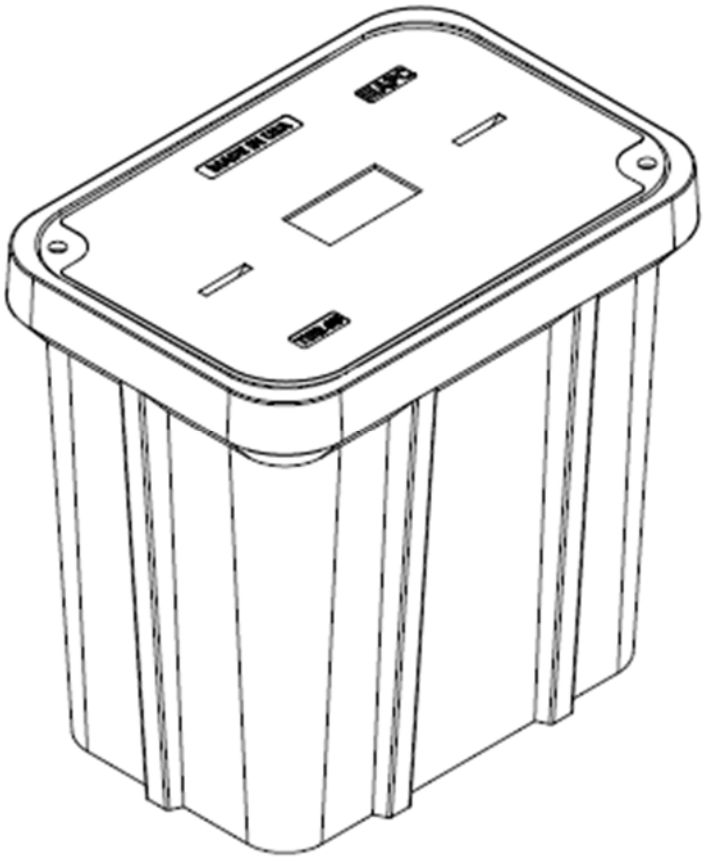

Description	Nominal Size	ANSI Tier	Part Number	Estimated Weight
PC Unit – TIER 15	24x36”x18”	Tier 15	P243618U15...	335 lbs.
PC Unit – TIER 22	24x36”x18”	Tier 22	P243618U22...	355 lbs.
PC Unit – TIER 15	24x36”x24”	Tier 15	P243624U15...	365 lbs.
PC Unit – TIER 22	24x36”x24”	Tier 22	P243624U22...	385 lbs.
PC Unit – TIER 15	24x36”x30”	Tier 15	P243630U15...	395 lbs.
PC Unit – TIER 22	24x36”x30”	Tier 22	P243630U22...	415 lbs.
PC Unit – TIER 15	24x36”x36”	Tier 15	P243636U15...	425 lbs.
PC Unit – TIER 22	24x36”x36”	Tier 22	P243636U22...	445 lbs.

PROUDLY MADE IN USA

www.apcunderground.com

24”x36” PC UNIT, TIER 15/22

18”, 24”, 30”, and 36” HEIGHT

APC

AMERICAN POLYMER COMPANY

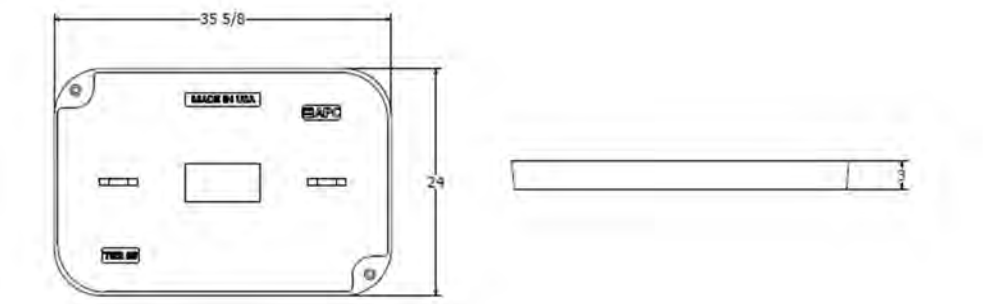

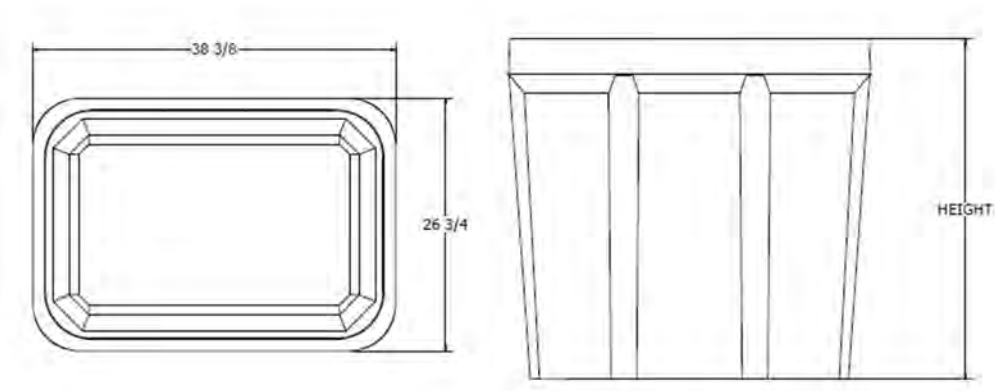

Components	Nominal Size	ANSI Tier	Part Number	Estimated Weight
Replacement Box	24”x36”x18”	Tier 22	P243618B22	165 lbs.
Replacement Box	24”x36”x24”	Tier 22	P243624B22	195 lbs.
Replacement Box	24”x36”x30”	Tier 22	P243630B22	225 lbs.
Replacement Box	24”x36”x36”	Tier 22	P243636B22	255 lbs.
Replacement Lids – T15	24”x36”	Tier 15	Various	170 lbs.
Replacement Lids – T22	24”x36”	Tier 22	Various	190 lbs.

Bolt options

Hex Head

Machine Thread

Penta Head

Auger Thread

PROUDLY MADE IN USA

www.apcunderground.com

17”x30” PC UNIT, TIER 15/22

12”, 18”, 24”, and 30” HEIGHT

APC

AMERICAN POLYMER COMPANY

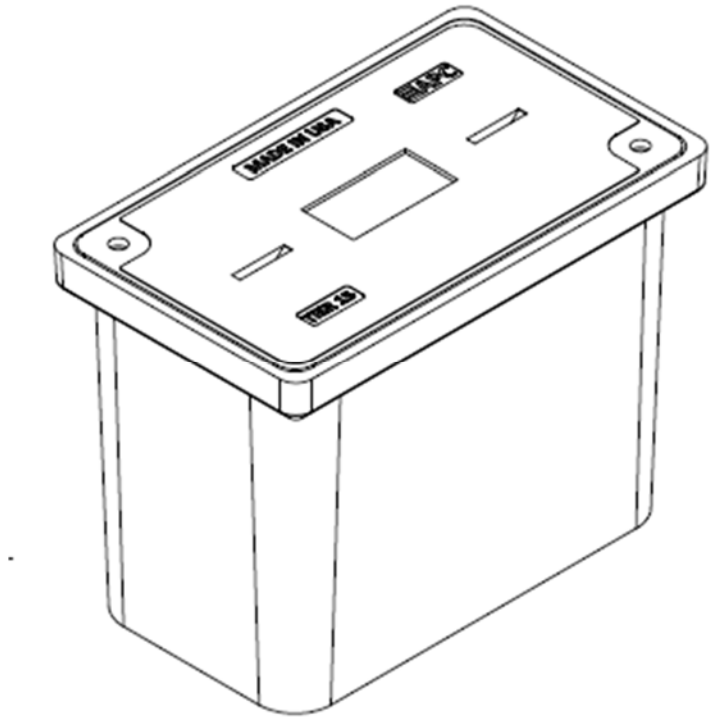

Description	Nominal Size	ANSI Tier	Part Number	Estimated Weight
PC Unit – TIER 15	17”x30”x12”	Tier 15	P173012U15...	138 lbs.
PC Unit – TIER 22	17”x30”x12”	Tier 22	P173012U22...	147 lbs.
PC Unit – TIER 15	17”x30”x18”	Tier 15	P173018U15...	172 lbs.
PC Unit – TIER 22	17”x30”x18”	Tier 22	P173018U22...	181 lbs.
PC Unit – TIER 15	17”x30”x24”	Tier 15	P173024U15...	192 lbs.
PC Unit – TIER 22	17”x30”x24”	Tier 22	P173024U22...	201 lbs.
PC Unit – TIER 15	17”x30”x30”	Tier 15	P173030U15...	217 lbs.
PC Unit – TIER 22	17”x30”x30”	Tier 22	P173030U22...	226 lbs.

PROUDLY MADE IN USA

www.apcunderground.com

17”x30” PC UNIT, TIER 15/22

12”, 18”, 24”, and 30” HEIGHT

APC

AMERICAN POLYMER COMPANY

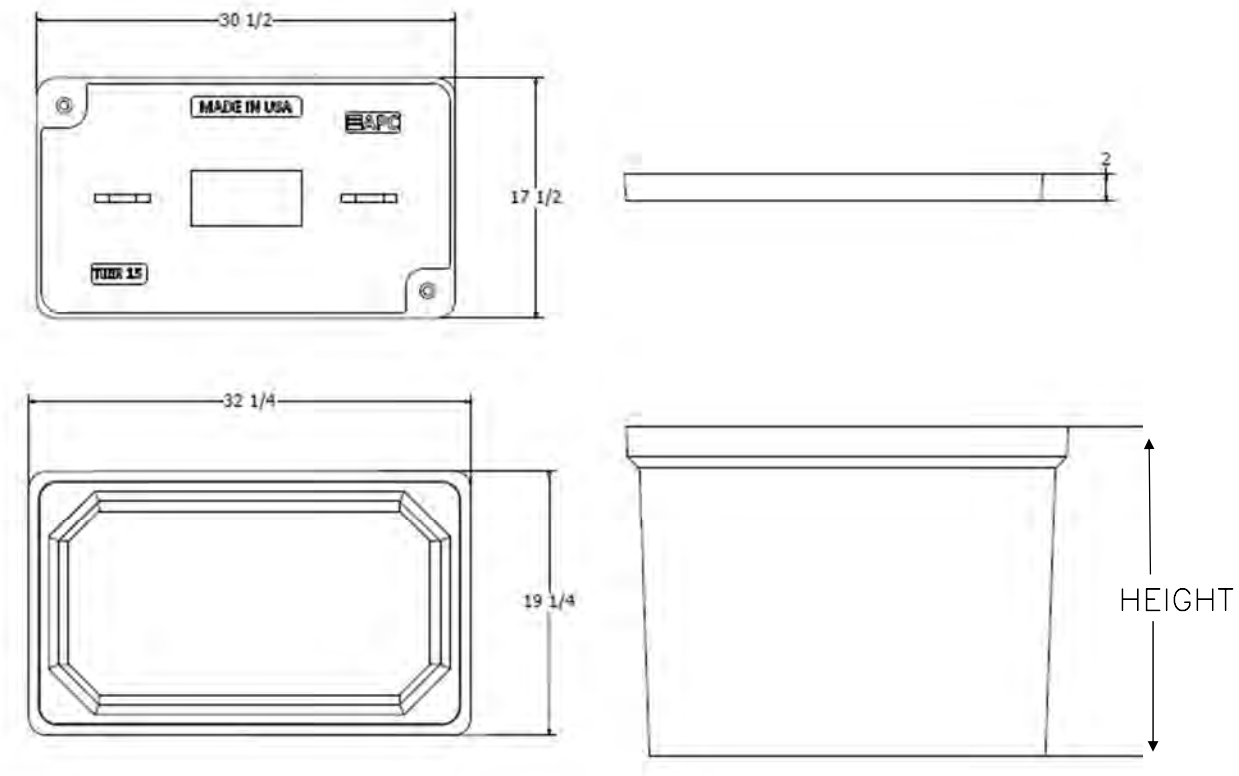

Components	Nominal Size	ANSI Tier	Part Number	Estimated Weight
Replacement Box	17”x30”X12”	Tier 22	P173012B22	66 lbs.
Replacement Box	17”x30”X18”	Tier 22	P173018B22	100 lbs.
Replacement Box	17”x30”x24”	Tier 22	P173024B22	120 lbs.
Replacement Box	17”x30”x30”	Tier 22	P173030B22	145 lbs.
Replacement Lids – T15	17”x30”	Tier 15	Various	72 lbs.
Replacement Lids – T22	17”x30”	Tier 22	Various	81 lbs.

Bolt options

Hex Head

Machine Thread

Penta Head

Auger Thread

PROUDLY MADE IN USA

www.apcunderground.com

33”x60” PC UNIT, 2PC TIER 15/22

36” HEIGHT

APC

AMERICAN POLYMER COMPANY

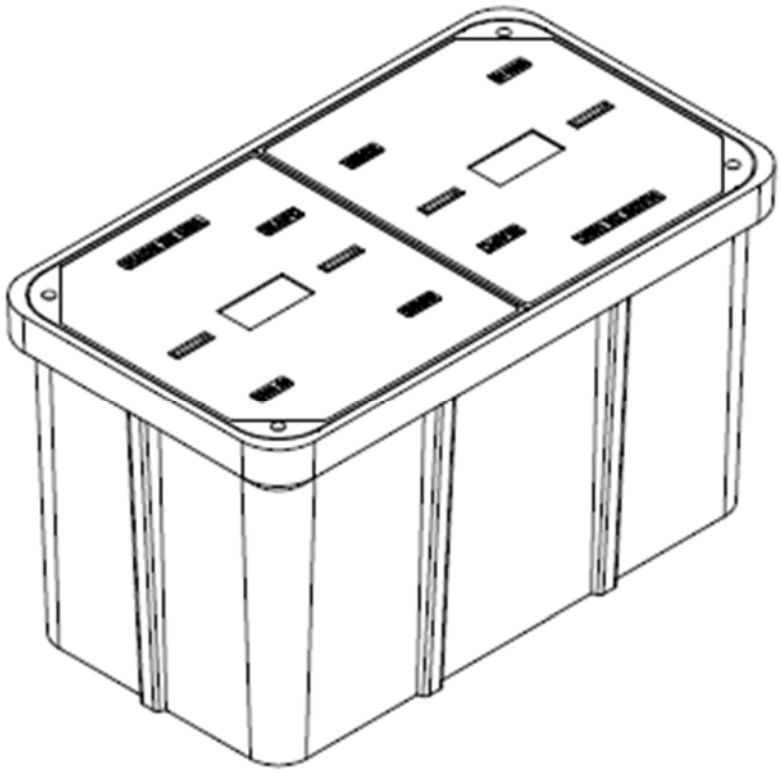

Description	Nominal Size	ANSI Tier	Part Number	Estimated Weight
PC Unit – TIER 15	33”x60”x36”	Tier 15	P336036U15...	930 lbs.
PC Unit – TIER 22	33”x60”x36”	Tier 22	P336036U22...	1030 lbs.

PROUDLY MADE IN USA

www.apcunderground.com

33”x60” PC UNIT, 2PC TIER 15/22

36” HEIGHT

APC

AMERICAN POLYMER COMPANY

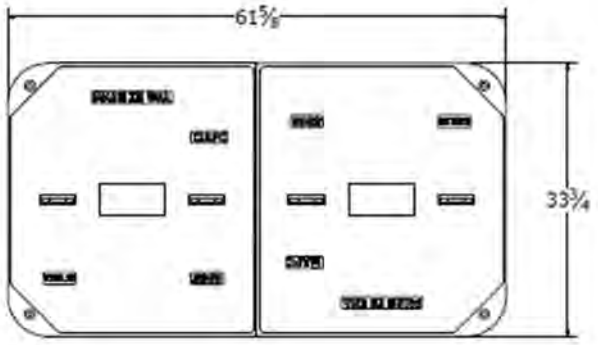

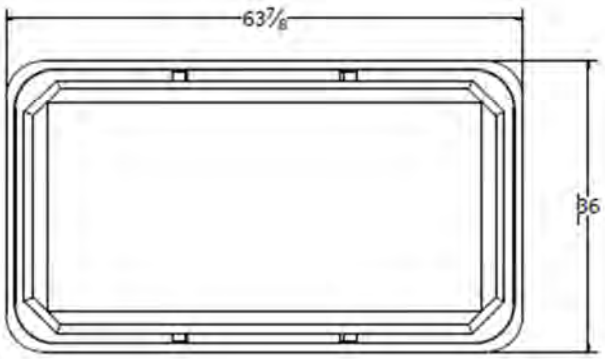

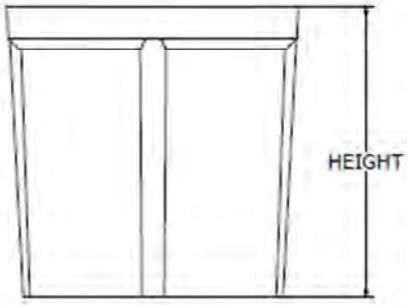

Components	Nominal Size	ANSI Tier	Part Number	Estimated Weight
Replacement Box	33”x60”x36”	Tier 22	P336036B22	530 lbs.
Replacement Lids – T15	33”x60” (half)	Tier 15	Various	200 lbs.
Replacement Lids – T22	33”x60” (half)	Tier 22	Various	250 lbs.

Bolt options

Hex Head

Machine Thread

Penta Head

Auger Thread

PROUDLY MADE IN USA

www.apcunderground.com

Spacing Charts Based on MUTCD Must be Approved by an Engineer

Speed (MPH) Prior To Road Work	SIGN SPACING, FT. Non-Divided Highways	SIGN SPACING, FT. Divided Highways	BUFFER SPACE, FT. Length	TAPER LENGTH, FT. Shoulder (10 ft Width)	TAPER LENGTH, FT. Lane (12 ft Width)	CHANNELIZING SPACING, FT. Through Taper	CHANNELIZING SPACING, FT. Through Buffer/Work Area
0-35	200	200	250	70	245	35	50
40-45	350	500	360	150	540	40	80
50-55	500	1000	495	185	660	50	100
60-70	SA-1000, SB-1500, SC-2640		730	235	840	60	120
	Urban Low Speed - 100 FT						

APPROVED/ACCEPTED BY:
ENGINEER, OWNER, or PRIME CONTRACTOR
☐ **Check for Notice to Proceed.**

Signature: _____

Company: _____

Date: 2/28/2024 **Project:** BLW01a-F02_S Leonard Springs Rd TCP1 :
: **Traffic Control Suggestion For:** ATLANTIC ENGINEERING (AEG) :
By: Road Runner Safety Services, Inc. : Nathan

Comments:
Drawing not to scale. Traffic control plan must be approved by an engineer. This is a suggestion only. Road Runners Safety Services, Inc. has no liability for this suggested traffic control plan. Actual placement and spacing of all traffic control devices will depend on field conditions and must conform to MUTCD standards.

Legend
- Channelizer
- Conduit
- Flagger (Person)
- Overhead Strand
- Vault
- Work Area

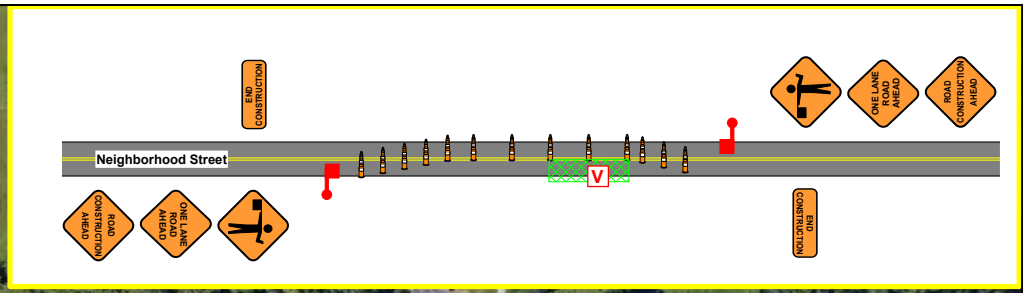

Cedar Chase Dr
W Barge Ln
Continues into County Permit
Continues into BLW01a-F03_W Barge Rd Permit
S Leonard Springs Rd
S Leonard Springs Rd
Continues into County Permit
Continues into County Permit
S Market Pl
W Maybury Mall
W Stafford Dr
W Fairington Dr
W Tapp Rd
S Arrow Ave
Google
Imagery and map data ©2024, Google

CITY OF BLOOMINGTON
RIGHT-OF-WAY USE PERMIT APPLICATION

401 N Morton Street, Suite 130
P.O. Box 100
Bloomington, IN 47402

Phone: (812) 349-3913
Fax: (812) 349-3520
Email:
engineering@bloomington.in.gov

☑ ROW EXCAVATION ☑ ROW USE

ADDRESS OF ROW ACTIVITY: BLW01a-F02_S Leonard Springs Rd

A. APPLICANT/AGENT INFORMATION:

APPLICANT NAME: Bret Simons
E-MAIL: bret.simons@aeg.cc
COMPANY: Atlantic Engineering Group
ADDRESS: P.O. Box 349
CITY, STATE, ZIP: Buford, GA 30515
24-HR EMERGENCY CONTACT NAME: (706)654-2298
24-HR CONTACT PHONE #:
INSURANCE #*: TB5-691-473497-082 COMPANY: ACORD
BOND#*: 1160465 COMPANY: LEXON
* INSURANCE & BOND MUST BE ON FILE WITH THE CITY BEFORE PERMIT WILL BE ISSUED

****SUBCONTRACTOR INFORMATION****

(LIST ALL COMPANIES WORKING UNDER PRIMARY CONTRACTOR PERMIT)

COMPANY NAME:

B. WORK DESCRIPTION:

☐ POD/DUMPSTER ☐ CRANE ☐ SCAFFOLDING ☑ CONSTRUCTION USE*
(EXPLAIN): Excavation
*EXCAVATION, LONG TERM USE FOR STORAGE OF MATERIAL/EQUIPMENT/WALKAROUND

C. RIGHT OF WAY TO BE USED/CLOSED:

STREET NAME 1: S Leonard Springs Rd
1ST INTERSECTING STREET NAME:
2ND INTERSECTING STREET NAME:
☐ ROAD CLOSURE ☑ LANE CLOSURE 1 ☑ 2 ☐ 3 ☐
☑ SIDEWALK* ☐ BIKE LANE ☐ OTHER
TRANSIT STOP? ☐ Y ☐ N PARKING LANE(S)** ☐ Y ☐ N **NON-METERED
START DATE: Mar 22nd END DATE: # OF DAYS*: 30

STREET NAME 2:
1ST INTERSECTING STREET NAME:
2ND INTERSECTING STREET NAME:
☐ ROAD CLOSURE ☐ LANE CLOSURE 1 ☐ 2 ☐ 3 ☐ ☐
☐ SIDEWALK* ☐ BIKE LANE ☐ OTHER
TRANSIT STOP? ☐ Y ☐ N PARKING LANE(S)** ☐ Y ☐ N **NON-METERED
START DATE: END DATE: # OF DAYS*:

*SIDEWALK CLOSURES FOR A PERIOD OR PERIODS TOTALING 24HRS OR MORE SHALL INSTALL A WALKAROUND UNLESS OTHERWISE APPROVED DURING REVIEW

STANDARD CLOSURE HOURS MON-FRI*: 9:00 AM - 3:00 PM & 6:00 PM - 9:00 PM

STANDARD CLOSURE HOURS ☑ *NON-STANDARD CLOSURE HOURS ☐
REQUESTED CLOSURE HOURS: AM - PM
***non-standard hours may not be allowed near schools, on arterials, or other circumstances and are subject to approval during the permitting process**
BMC 14.09.040 allows work from 6 AM to 10 PM without violating the noise ordinance (7AM to 9PM for pneumatic hammers)

D. TRAFFIC CONTROL DEVICES*:

☑	CONES	☐	ARROWBOARD
☐	LIGHTED BARRELS	☑	TYPE 3 BARRICADES
☑	FLAGGERS	☐	BPD OFFICER

*PROVIDING MUTCD COMPLIANT TEMPORARY TRAFFIC CONTROL DEVICES AND MAINTENANCE OF TRAFFIC (MOT)PLAN IS YOUR RESPONSIBILITY AND REQUIRED
See page 3 for additional MOT resources; the graph paper can be used for your MOT site plan if needed or you can submit a separate sheet

E. METERED PARKING SPACES NEEDED: ☐ Y ☐ N

IT IS THE RESPONSIBILITY OF THE APPLICANT TO RESERVE PARKING METER(S) APPLICATION LOCATED: https://bloomington.in.gov/transportation/parking/ moving OR CONTACT PARKING SERVICES WITH QUESTIONS AT (812)349-3436

F. IS THIS A ☐ CBU* ☐ COUNTY* ☐ IU* ☐ NP* PROJECT?

PROJECT NAME: BLW01a-F02_S Leonard Springs Rd
PROJECT #: BLW01a-F02_S Leonard Springs Rd
PROJECT MGR.: Patrick Brigman
PROJECT MGR. #: 215-847-8819
***CBU = CITY OF BLOOMINGTON UTILITIES *COUNTY = MONROE COUNTY**
***IU= INDIANA UNIVERSITY *NP= NOT-FOR-PROFIT AGENCY**

G. EXCAVATIONS:

SQ FT OF PAVEMENT* EXCAVATIONS : N/A
*PAVEMENT INCLUDES: IN OR UNDER CONCRETE, OR ASPHALT INCLUDING CURBS
SQ FT OF NON-PAVEMENT* EXCAVATIONS: 23.54 Sq Ft
*DIRT, GRASS, GRAVEL, LANDSCAPE AREA OR OTHER UNPAVED SURFACE
LINEAL FT OF BORE*: 209 Lineal Ft
*BORE PITS SHALL BE CALCULATED AS SQ FT EXCAVATIONS
OF POLE INSTALLATIONS/REMOVAL: N/A
SQ FT OF SIDEWALK RECONSTRUCTION*: N/A
*CONCRETE OR ASPHALT SIDEWALK/PATH BEING IMPROVED/REPLACED
SQ FT OF SIDEWALK NEW CONSTRUCTION*: N/A
*CONCRETE OR ASPHALT SIDEWALK/PATH THAT IS NEW INFRASTRUCTURE
#RESIDENTIAL DRIVEWAY INSTALLATION: N/A

Indiana 811 — Know what's below. Call before you dig.

TO SUBMIT A LOCATE REQUEST 24 HRS A DAY,
7 DAYS A WEEK
CALL 811 OR 800-382-5544
CALL 2 WORKING DAYS BEFORE YOU DIG.
ITS THE LAW.

H. INDEMNIFICATION AGREEMENT:

The petitioner/applicant hereby agrees to hold harmless, defend and to indemnify the City of Bloomington from or against all claims, action, damages and expenses, including but not limited to reasonable attorney's fees or any alleged injury and/or death to any person or damage to any property arising, or alleged to have arisen out of any act of commission or omission on the part of the petitioner/applicant, his/her heirs, successors, or assigns regardless of whether such acts are the direct or indirect result of the public right-of-way use pursuant to this permit grant.

I AFFIRM, UNDER THE PENALTIES FOR PERJURY, THAT THE FOREGOING REPRESENTATIONS ARE TRUE.

PRINT NAME: Bret Simons
SIGNATURE: Bret Simons
DATE: 2/28/2024

For Administration Use Only (applicable to CLOSURE approval)

Approved By: ☐ BPW ☐ City Engineer ☐ Director Date:

Staff Representative: Phone#: Date:

Board of Public Works
Staff Report

Project/Event:	Lane and Sidewalk Closures for City-wide Fiber Project
Staff Representative:	Alex Gray
Petitioner/Representative:	Bret Simons, Jerrod Gabriel
Date:	July 30th, 2024

Report: AEG is requesting rolling lane and sidewalk closures for 2 permit areas as they continue the City-wide Fiber Project that is placing conduit and internet fiber lines throughout the City. The 2 permits shown have not been approved in the past and are new areas of the City AEG will access as part of their work. Each area is expected to take about 3 months to fully complete. The areas are:

W Sunset Ave	Includes aerial and underground fiber placement in the neighborhood north of Highland Village Park. Includes the areas of S Western Dr, S Harvey Dr, W Belle Ave, W Sunset Ave, and S Westwood Dr.
W Jacob Dr	Underground fiber placement in the commercial area west of I-69 along N Gates Dr and W Runkle Way. There is INDOT ROW work as well that the permit is expected to connect into once complete.

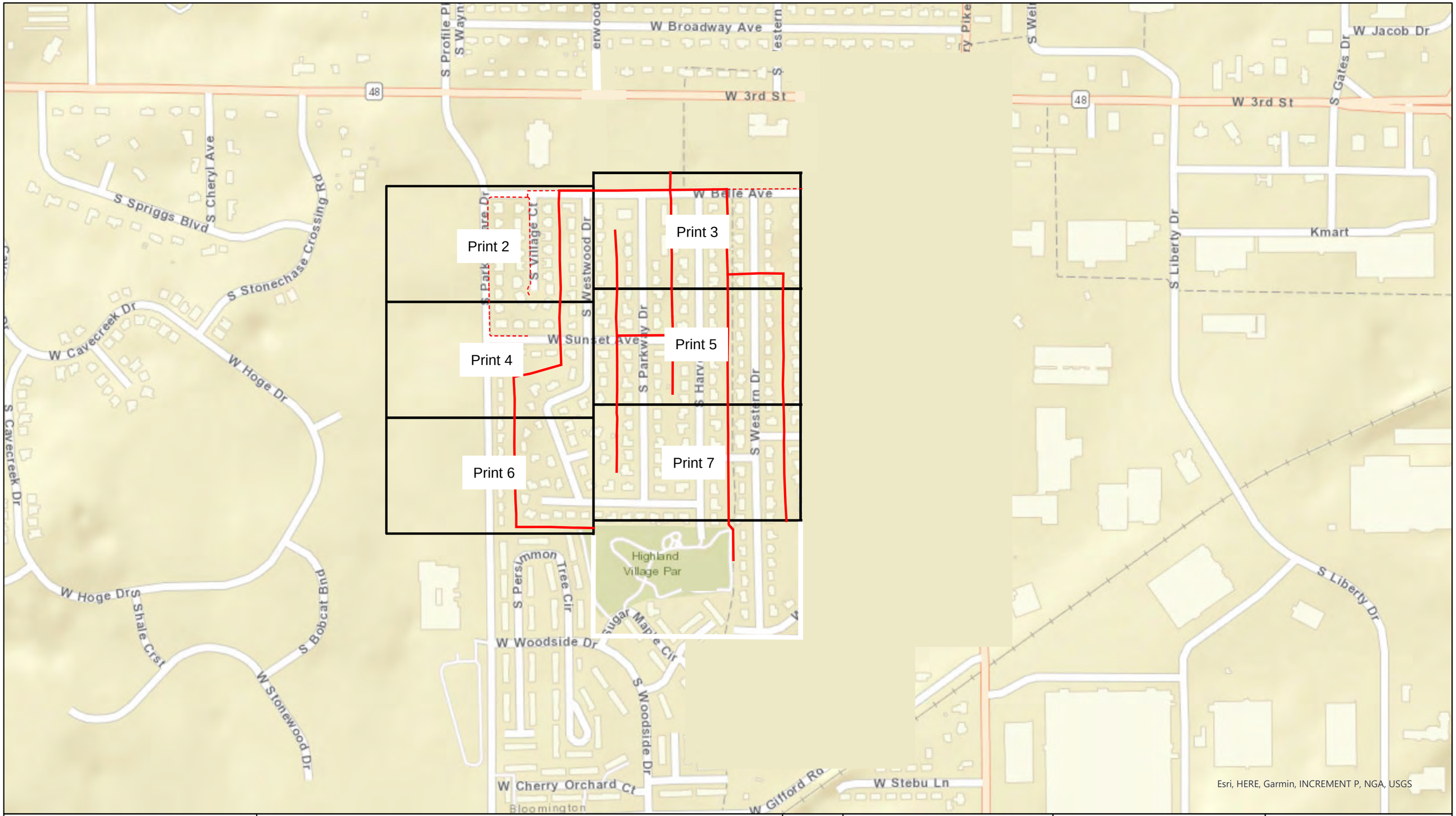

AEG

0 310 620 1,240 Feet

Legend BLW01a-F08_W Sunset Ave

- Proposed Aerial
- Conduit
- Grids

N

City of Bloomington, IN Permit:
Design View

INI	BY	DATE	DESCRIPTION

Indiana811

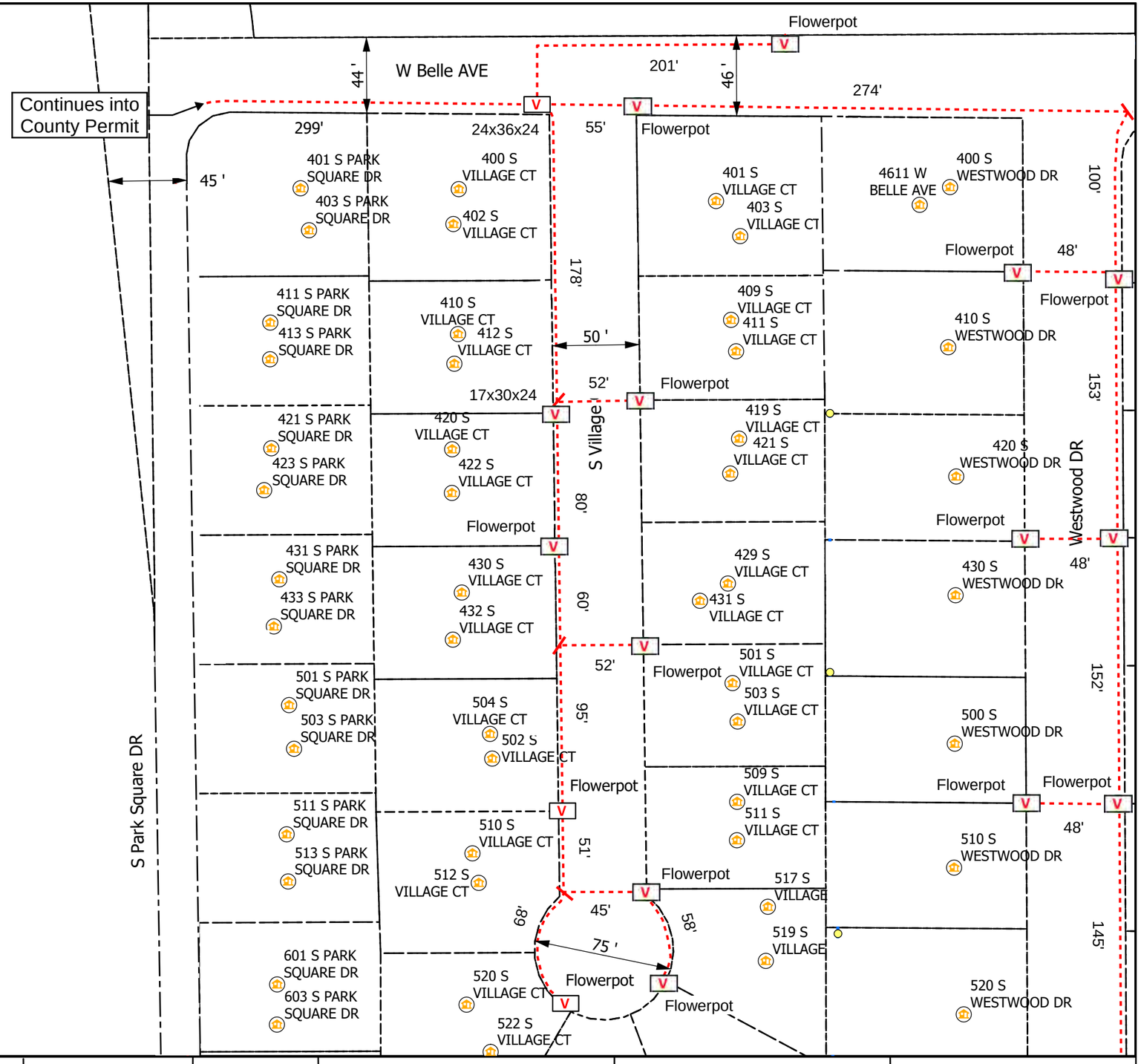

AEG

0 20 40 80 Feet

Legend

- Poles
- Vaults
- Overhead Strand
- Conduit
- Risers
- Address
- Anchor
- Sidewalk
- Bloomington_Parcels
- Grids

All Flowerpots 12" DIA

N

City of Bloomington, IN Permit: Design View

INI	BY	DATE	DESCRIPTION

Indiana 811

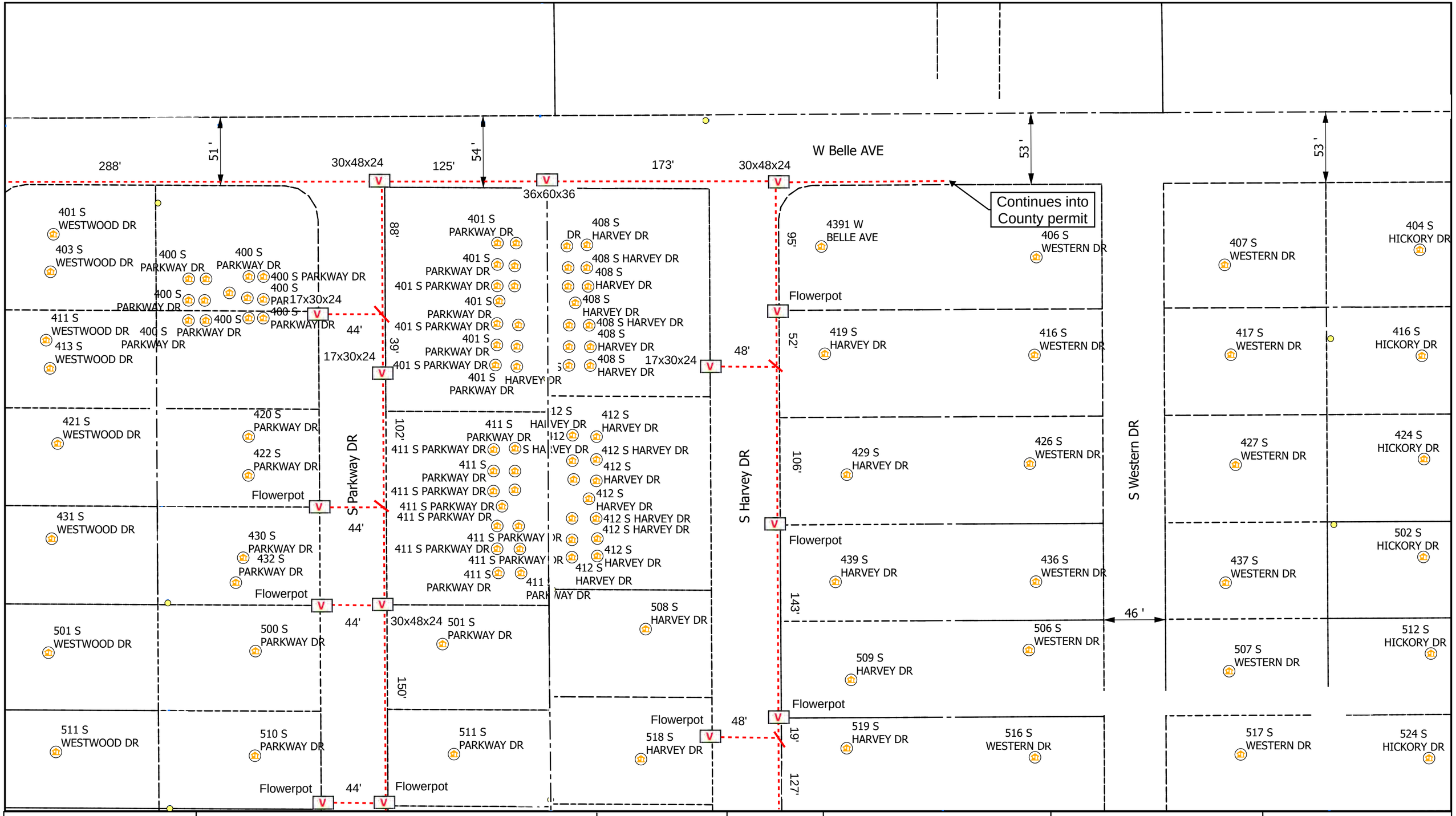

AEG

0 20 40 80 Feet

Legend

- Poles
- Vaults
- Overhead Strand
- Conduit
- Risers
- Address
- Anchor
- Sidewalk
- Bloomington_Parcels
- Grids

All Flowerpots 12" DIA

N

City of Bloomington, IN Permit:
Design View

INI	BY	DATE	DESCRIPTION

Indiana 811

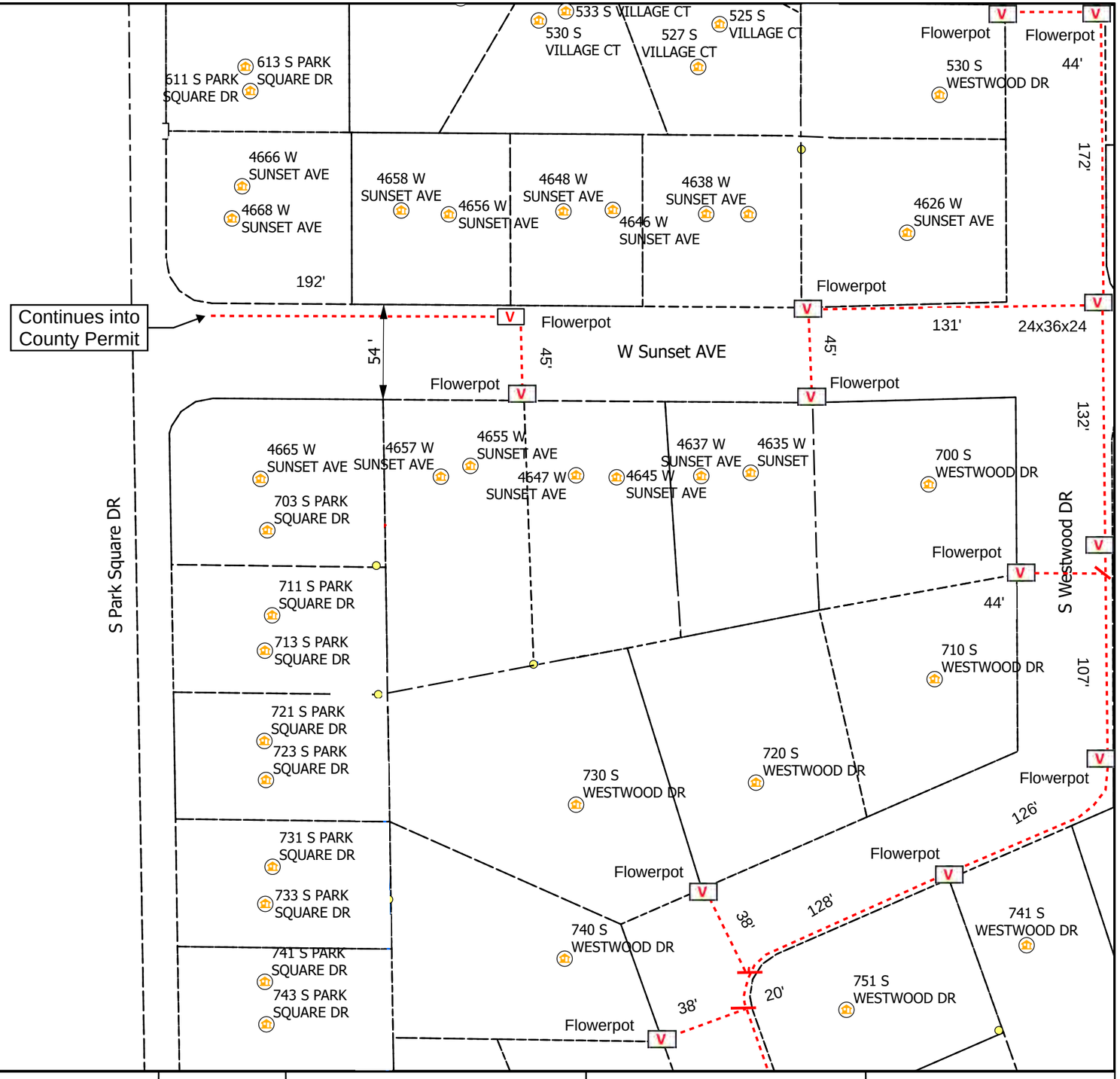

AEG

0 20 40 80 Feet

Legend

- Poles
- Vaults
- Overhead Strand
- Conduit
- Risers
- Address
- Anchor
- Sidewalk
- Bloomington_Parcels
- Grids

All Flowerpots 12" DIA

N

City of Bloomington, IN Permit: Design View

INI	BY	DATE	DESCRIPTION

Indiana 811

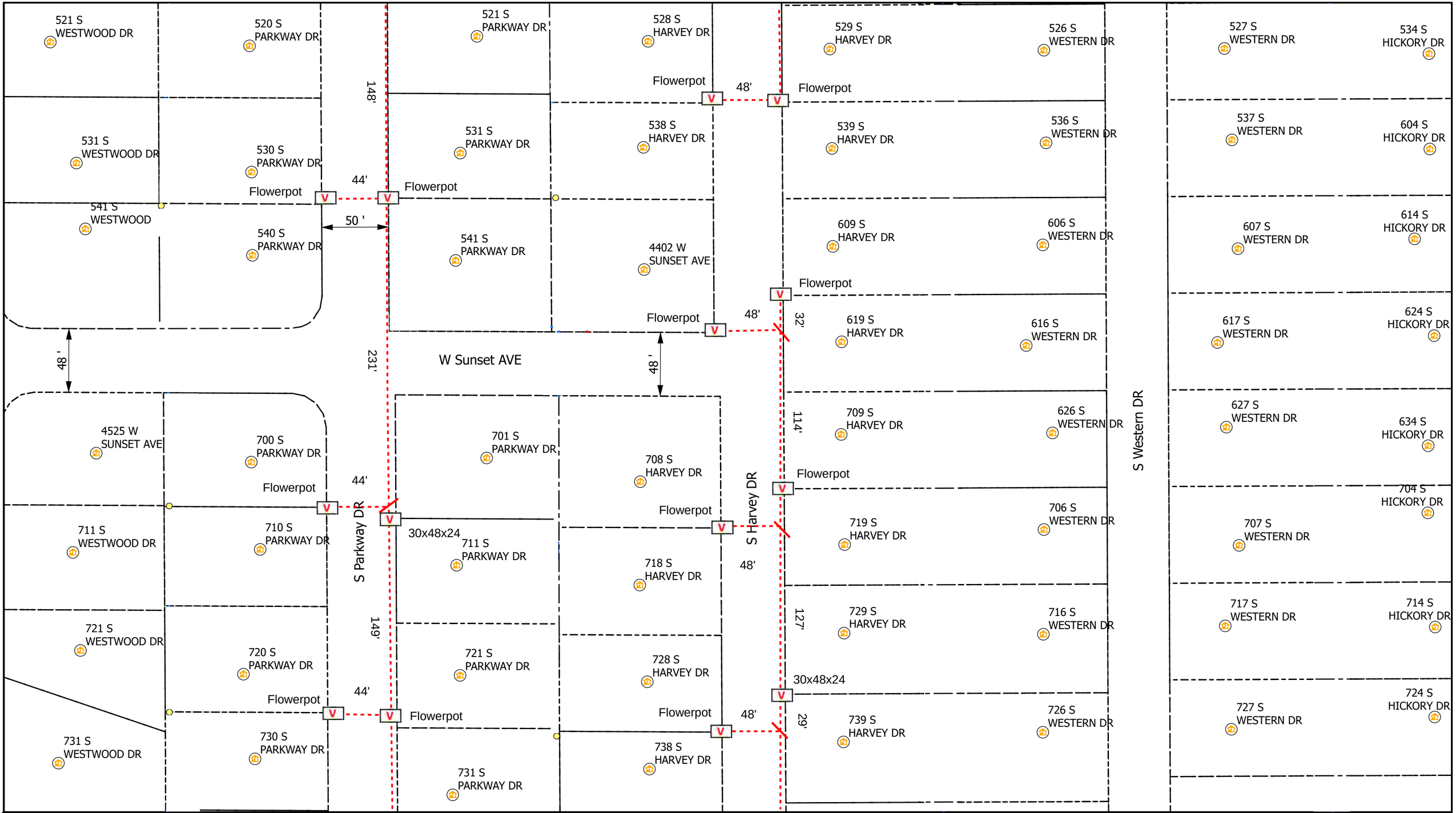

AEG

0 20 40 80 Feet

Legend

- Poles
- Vaults
- Overhead Strand
- Conduit
- Risers
- Address
- Anchor
- Sidewalk
- Bloomington_Parcels
- Grids

All Flowerpots 12" DIA

N

City of Bloomington, IN Permit:
Design View

INI	BY	DATE	DESCRIPTION

Indiana811

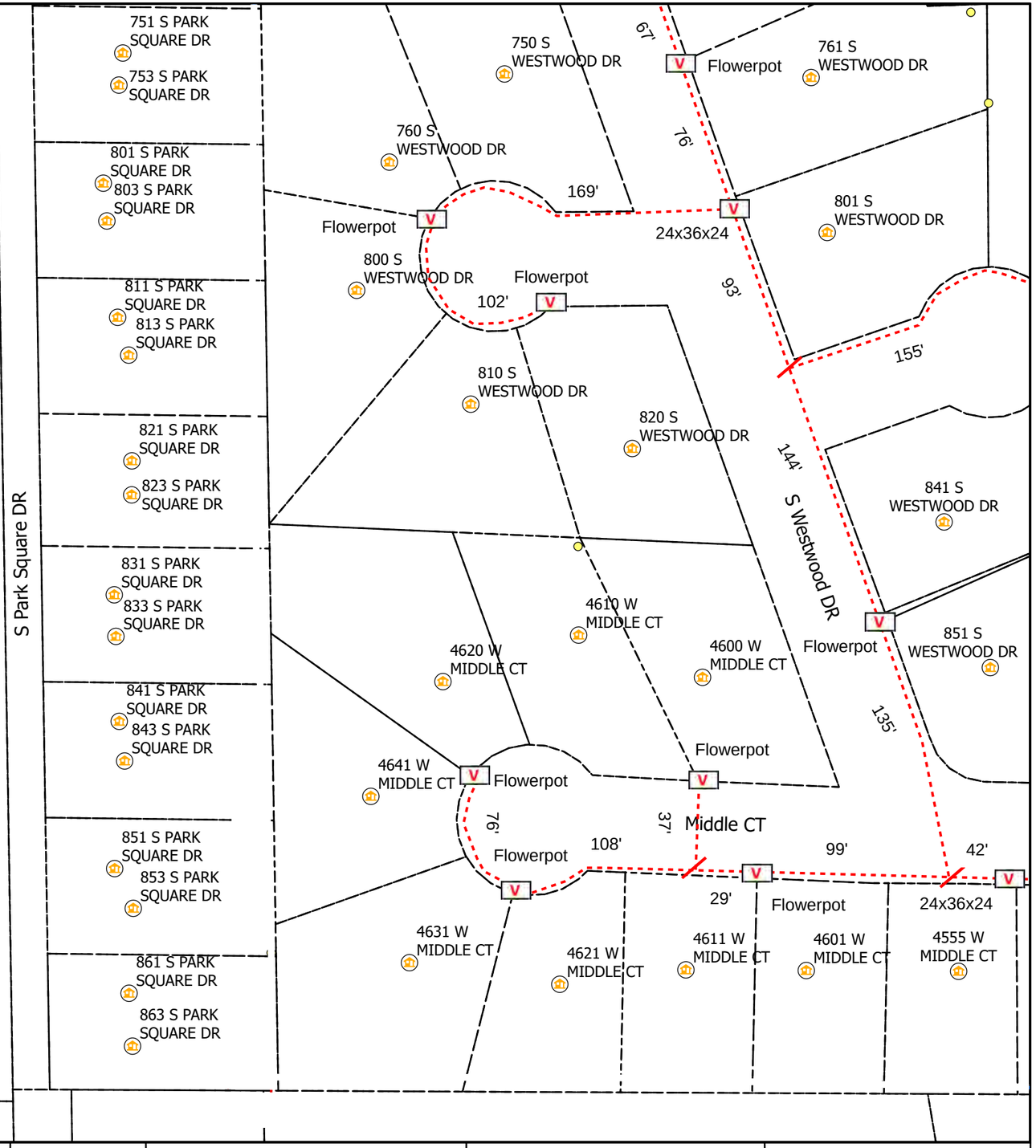

0 20 40 80 Feet

Legend

- Poles
- Vaults
- Overhead Strand
- Conduit
- Risers
- Address
- Anchor
- Sidewalk
- Bloomington_Parcels
- Grids

All Flowerpots 12" DIA

N

City of Bloomington, IN Permit:
Design View

INI	BY	DATE	DESCRIPTION

Print 6 of 7

740 S PARKWAY DR
741 S PARKWAY DR
748 S HARVEY DR
749 S HARVEY DR
736 S WESTERN DR
737 S WESTERN DR
734 S HICKORY DR
744 S HICKORY DR
4216 W MIDDLE CT
750 S PARKWAY DR
751 S PARKWAY DR
758 S HARVEY DR
759 S HARVEY DR
746 S WESTERN DR
811 S WESTWOOD DR
760 S PARKWAY DR
761 S PARKWAY DR
768 S HARVEY DR
769 S HARVEY DR
756 S WESTERN DR
W Middle CT
821 S WESTWOOD DR
800 S PARKWAY DR
811 S PARKWAY DR
808 S HARVEY DR
807 S WESTERN DR
4201 W MIDDLE CT
831 S WESTWOOD DR
810 S PARKWAY DR
821 S PARKWAY DR
828 S HARVEY DR
829 S HARVEY DR
826 S WESTERN DR
817 S WESTERN DR
814 S HICKORY DR
824 S HICKORY DR
827 S WESTERN DR
4536 W MIDDLE CT
4526 W MIDDLE CT
4426 W MIDDLE CT
4406 W MIDDLE CT
839 S HARVEY DR
836 S WESTERN DR
846 S WESTERN DR
837 S WESTERN DR
849 S HARVEY DR
4545 W MIDDLE CT
4535 W MIDDLE CT
4525 W MIDDLE CT
4515 W MIDDLE CT
4425 W MIDDLE CT
4415 W MIDDLE CT
859 S HARVEY DR
856 S WESTERN DR
847 S WESTERN DR
S Parkway DR
S Harvey DR
S Western DR
S Westwood DR
Flowerpot
30x48x24
24x36x24
147'
15'
132'
135'
19'
151'
94'
92'
131'
161'
162'
72'
84'
70'
127'
35'
44'
48'
25'
51'
52'

Legend

- Poles
- Vaults
- Overhead Strand
- Conduit
- Risers
- Address
- Anchor
- Sidewalk
- Bloomington_Parcels
- Grids

0 20 40 80 Feet

All Flowerpots 12" DIA

N

City of Bloomington, IN Permit:
Design View

INI	BY	DATE	DESCRIPTION

Print 7 of 7

CONCEPTUAL SIDE VIEW

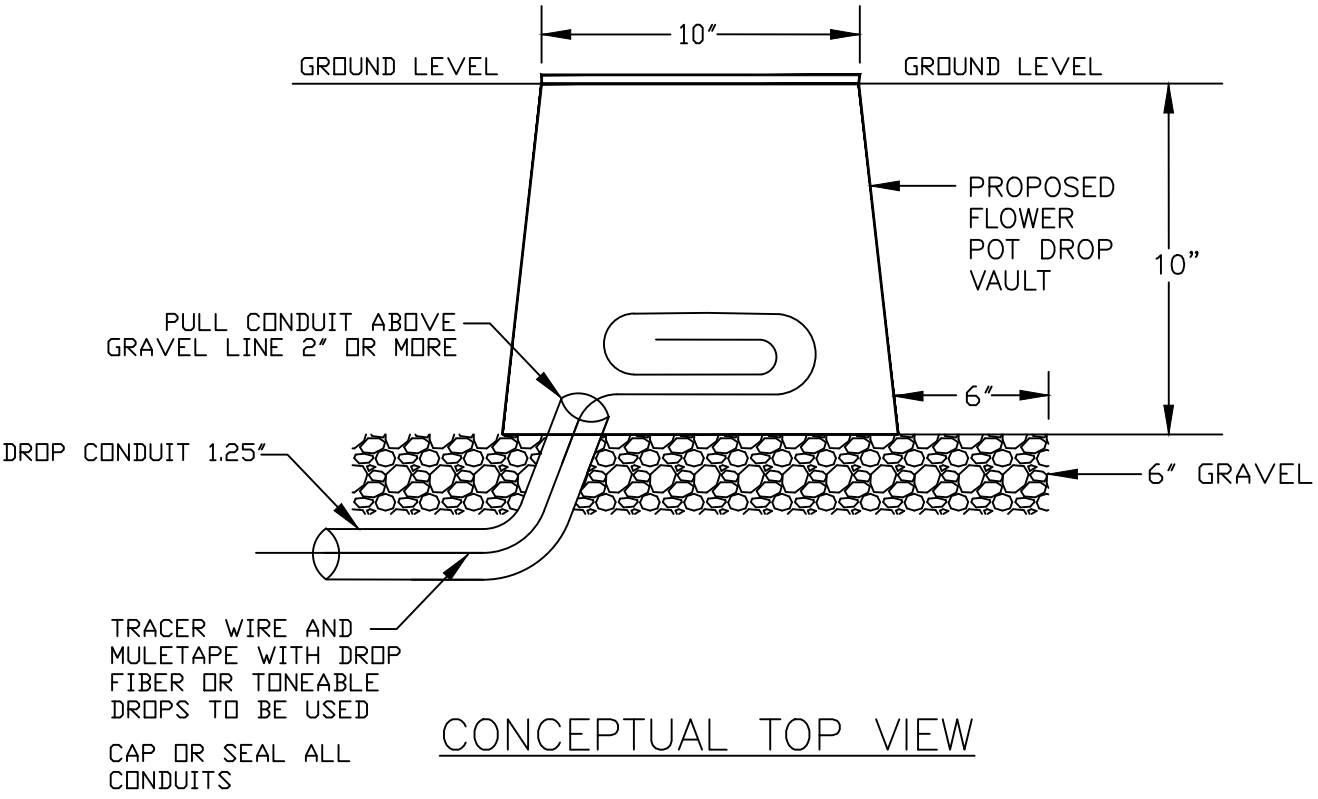

CONCEPTUAL TOP VIEW

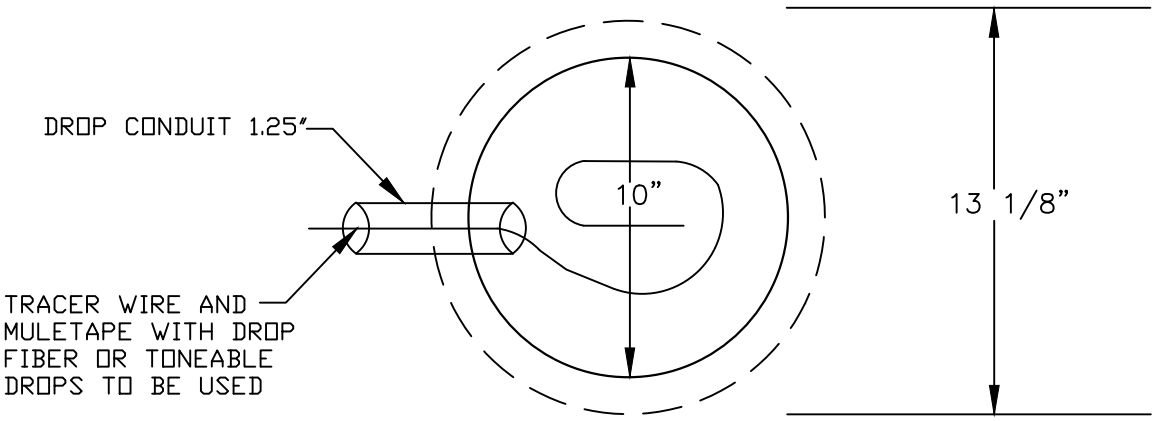

AEG

DATE: 02/02/2022
REVISION: CLM

SCALE: NTS

FLOWER POT

30”x48” PC UNIT, 2PC TIER 15/22

18”, 24”, and 36” HEIGHT

APC

AMERICAN POLYMER COMPANY

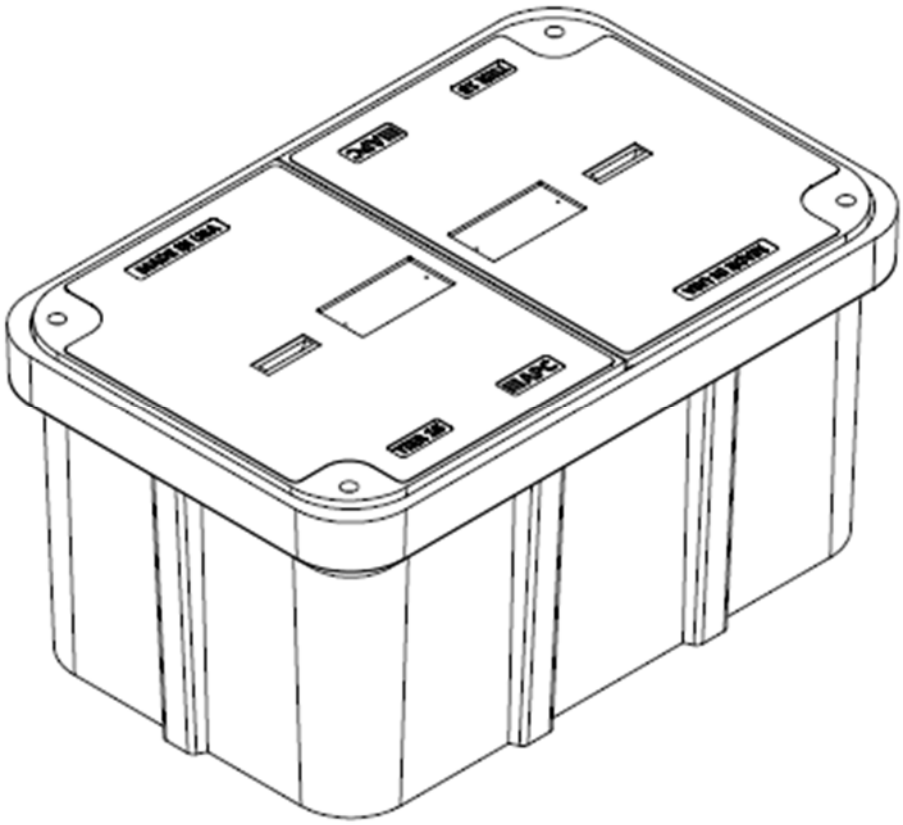

Description	Nominal Size	ANSI Tier	Part Number	Estimated Weight
PC Unit – TIER 15	30”x48”x18”	Tier 15	P304818HU15...	460 lbs.
PC Unit – TIER 22	30”x48”x18”	Tier 22	P304818HU22...	525 lbs.
PC Unit – TIER 15	30”x48”x24”	Tier 15	P304824HU15...	510 lbs.
PC Unit – TIER 22	30”x48”x24”	Tier 22	P304824HU22...	575 lbs.
PC Unit – TIER 15	30”x48”x36”	Tier 15	P304836HU15...	615 lbs.
PC Unit – TIER 22	30”x48”x36”	Tier 22	P304836HU22...	680 lbs.

PROUDLY MADE IN USA

www.apcunderground.com

30”x48” PC UNIT, 2PC TIER 15/22

18”, 24”, and 36” HEIGHT

APC

AMERICAN POLYMER COMPANY

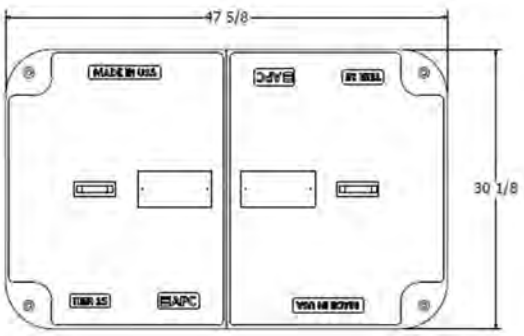

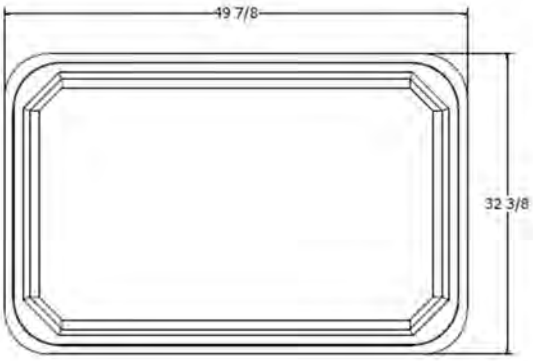

Components	Nominal Size	ANSI Tier	Part Number	Estimated Weight
Replacement Box	30”x48”x18”	Tier 22	P304818B22	185 lbs.
Replacement Box	30”x48”x24”	Tier 22	P304824B22	235 lbs.
Replacement Box	30”x48”x36”	Tier 22	P304836B22	340 lbs.
Replacement Lids – T15	30”x48” (half)	Tier 15	Various	150 lbs.
Replacement Lids – T22	30”x48” (half)	Tier 22	Various	170 lbs.

Bolt options

Hex Head

Machine Thread

Penta Head

Auger Thread

PROUDLY MADE IN USA

www.apcunderground.com

24”x36” PC UNIT, TIER 15/22

18”, 24”, 30”, and 36” HEIGHT

APC

AMERICAN POLYMER COMPANY

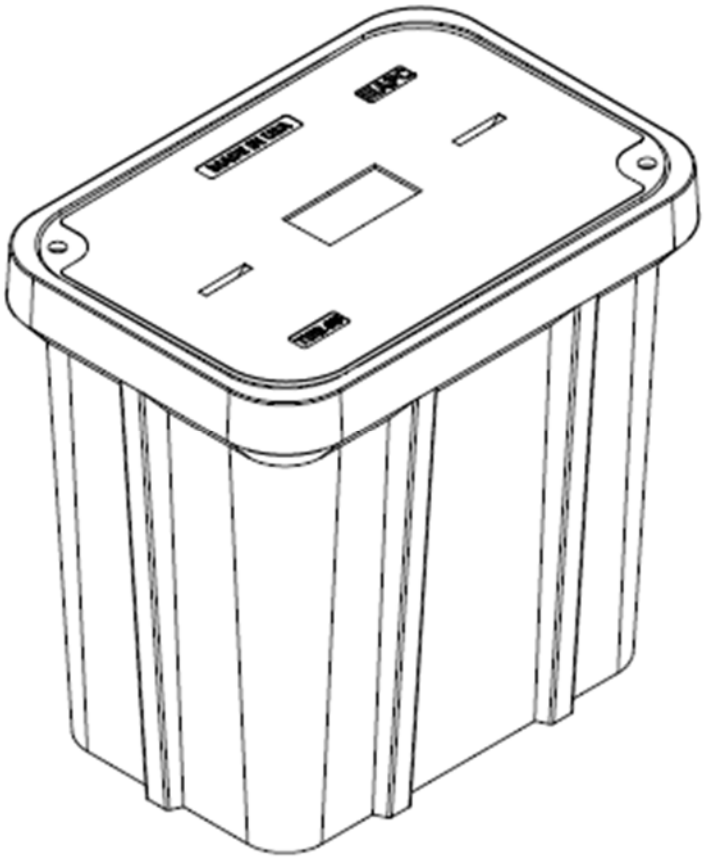

Description	Nominal Size	ANSI Tier	Part Number	Estimated Weight
PC Unit – TIER 15	24x36”x18”	Tier 15	P243618U15...	335 lbs.
PC Unit – TIER 22	24x36”x18”	Tier 22	P243618U22...	355 lbs.
PC Unit – TIER 15	24x36”x24”	Tier 15	P243624U15...	365 lbs.
PC Unit – TIER 22	24x36”x24”	Tier 22	P243624U22...	385 lbs.
PC Unit – TIER 15	24x36”x30”	Tier 15	P243630U15...	395 lbs.
PC Unit – TIER 22	24x36”x30”	Tier 22	P243630U22...	415 lbs.
PC Unit – TIER 15	24x36”x36”	Tier 15	P243636U15...	425 lbs.
PC Unit – TIER 22	24x36”x36”	Tier 22	P243636U22...	445 lbs.

PROUDLY MADE IN USA

www.apcunderground.com

24”x36” PC UNIT, TIER 15/22

18”, 24”, 30”, and 36” HEIGHT

APC

AMERICAN POLYMER COMPANY

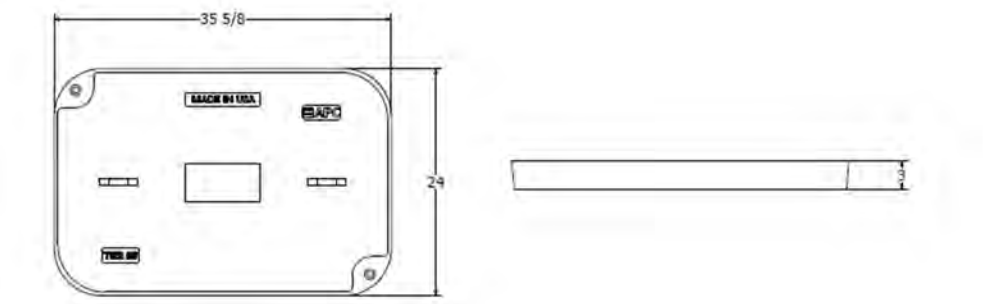

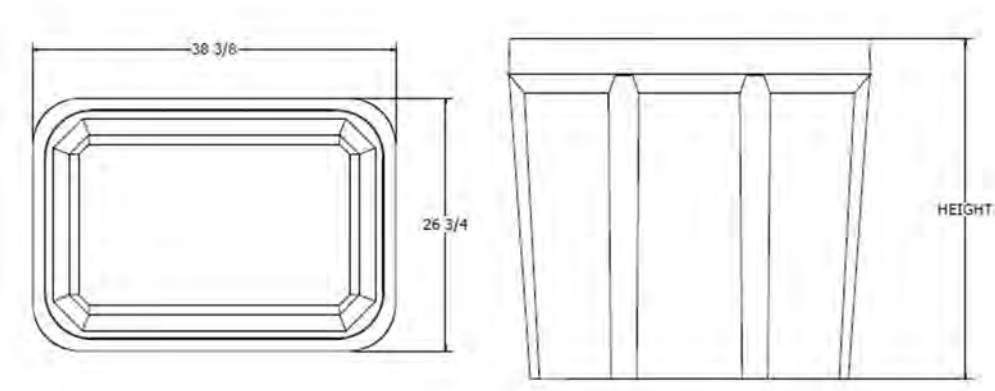

Components	Nominal Size	ANSI Tier	Part Number	Estimated Weight
Replacement Box	24”x36”x18”	Tier 22	P243618B22	165 lbs.
Replacement Box	24”x36”x24”	Tier 22	P243624B22	195 lbs.
Replacement Box	24”x36”x30”	Tier 22	P243630B22	225 lbs.
Replacement Box	24”x36”x36”	Tier 22	P243636B22	255 lbs.
Replacement Lids – T15	24”x36”	Tier 15	Various	170 lbs.
Replacement Lids – T22	24”x36”	Tier 22	Various	190 lbs.

Bolt options

Hex Head

Machine Thread

Penta Head

Auger Thread

PROUDLY MADE IN USA

www.apcunderground.com

17”x30” PC UNIT, TIER 15/22

12”, 18”, 24”, and 30” HEIGHT

APC

AMERICAN POLYMER COMPANY

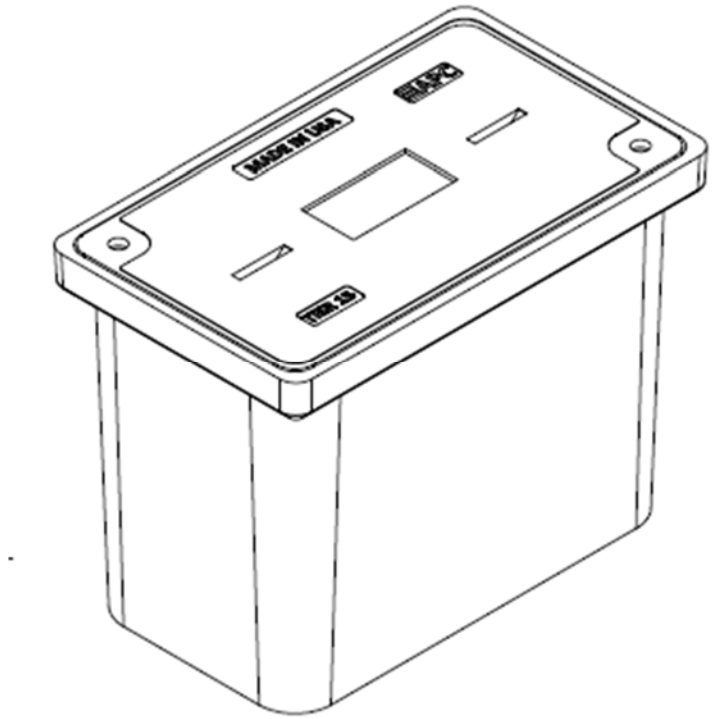

Description	Nominal Size	ANSI Tier	Part Number	Estimated Weight
PC Unit – TIER 15	17”x30”x12”	Tier 15	P173012U15...	138 lbs.
PC Unit – TIER 22	17”x30”x12”	Tier 22	P173012U22...	147 lbs.
PC Unit – TIER 15	17”x30”x18”	Tier 15	P173018U15...	172 lbs.
PC Unit – TIER 22	17”x30”x18”	Tier 22	P173018U22...	181 lbs.
PC Unit – TIER 15	17”x30”x24”	Tier 15	P173024U15...	192 lbs.
PC Unit – TIER 22	17”x30”x24”	Tier 22	P173024U22...	201 lbs.
PC Unit – TIER 15	17”x30”x30”	Tier 15	P173030U15...	217 lbs.
PC Unit – TIER 22	17”x30”x30”	Tier 22	P173030U22...	226 lbs.

PROUDLY MADE IN USA

www.apcunderground.com

17”x30” PC UNIT, TIER 15/22

12”, 18”, 24”, and 30” HEIGHT

APC

AMERICAN POLYMER COMPANY

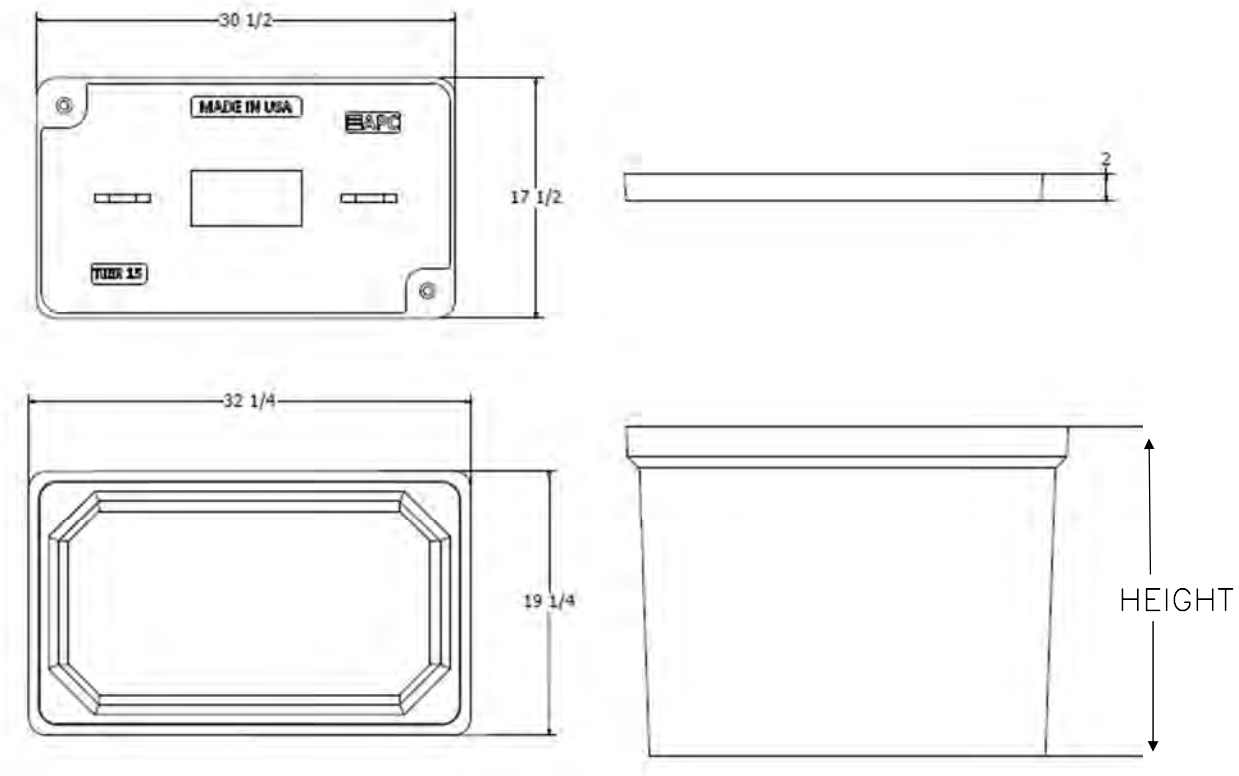

Components	Nominal Size	ANSI Tier	Part Number	Estimated Weight
Replacement Box	17”x30”X12”	Tier 22	P173012B22	66 lbs.
Replacement Box	17”x30”X18”	Tier 22	P173018B22	100 lbs.
Replacement Box	17”x30”x24”	Tier 22	P173024B22	120 lbs.
Replacement Box	17”x30”x30”	Tier 22	P173030B22	145 lbs.
Replacement Lids – T15	17”x30”	Tier 15	Various	72 lbs.
Replacement Lids – T22	17”x30”	Tier 22	Various	81 lbs.

Bolt options

Hex Head

Machine Thread

Penta Head

Auger Thread

PROUDLY MADE IN USA

www.apcunderground.com

33”x60” PC UNIT, 2PC TIER 15/22

36” HEIGHT

APC

AMERICAN POLYMER COMPANY

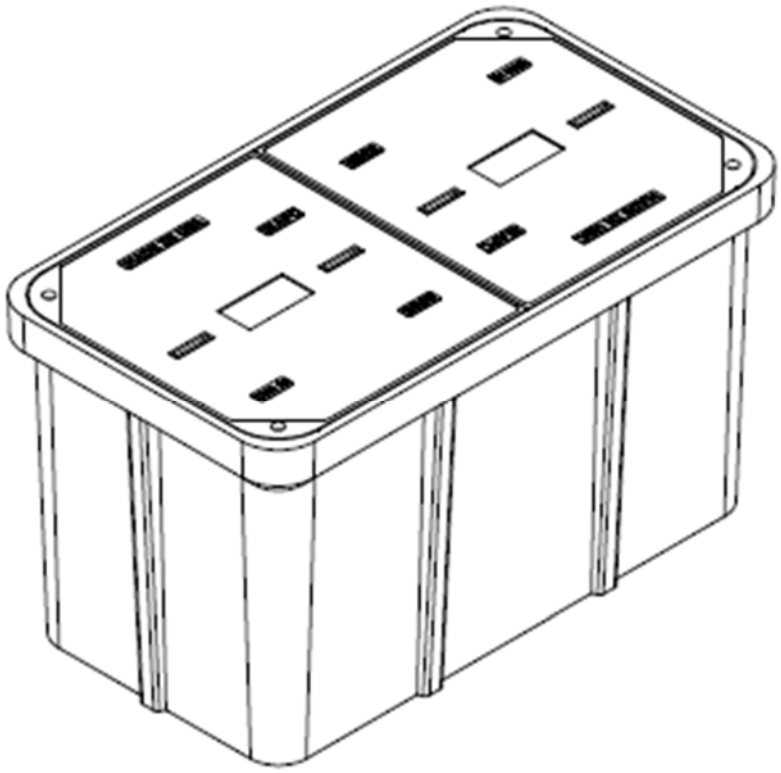

Description	Nominal Size	ANSI Tier	Part Number	Estimated Weight
PC Unit – TIER 15	33”x60”x36”	Tier 15	P336036U15...	930 lbs.
PC Unit – TIER 22	33”x60”x36”	Tier 22	P336036U22...	1030 lbs.

PROUDLY MADE IN USA

www.apcunderground.com

33”x60” PC UNIT, 2PC TIER 15/22

36” HEIGHT

APC

AMERICAN POLYMER COMPANY

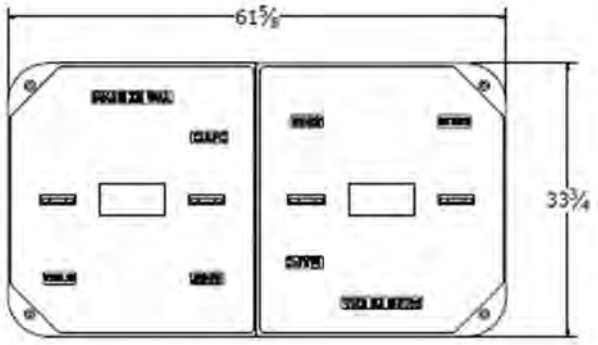

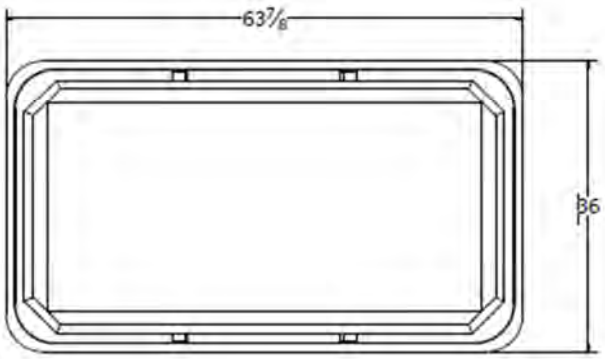

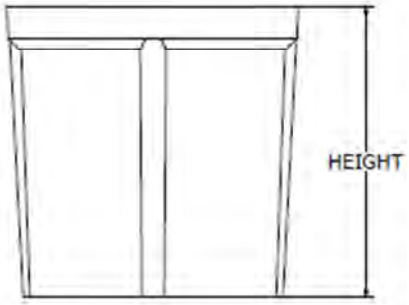

Components	Nominal Size	ANSI Tier	Part Number	Estimated Weight
Replacement Box	33”x60”x36”	Tier 22	P336036B22	530 lbs.
Replacement Lids – T15	33”x60” (half)	Tier 15	Various	200 lbs.
Replacement Lids – T22	33”x60” (half)	Tier 22	Various	250 lbs.

Bolt options

Hex Head

Machine Thread

Penta Head

Auger Thread

PROUDLY MADE IN USA

www.apcunderground.com

Spacing Charts Based on MUTCD **Must be Approved by an Engineer**

Speed (MPH) Prior To Road Work	SIGN SPACING, FT. Non-Divided Highways	SIGN SPACING, FT. Divided Highways	BUFFER SPACE, FT. Length	TAPER LENGTH, FT. Shoulder (10 ft Width)	TAPER LENGTH, FT. Lane (12 ft Width)	CHANNELIZING SPACING, FT. Through Taper	CHANNELIZING SPACING, FT. Through Buffer/Work Area
0-35	200	200	250	70	245	35	50
40-45	350	500	360	150	540	40	80
50-55	500	1000	495	185	660	50	100
60-70	SA-1000, SB-1500, SC-2640		730	235	840	60	120
	Urban Low Speed - 100 FT						

APPROVED/ACCEPTED BY:
ENGINEER, OWNER, or PRIME CONTRACTOR

☐ **Check for Notice to Proceed.**

Signature: _____

Company: _____

Date: 7/16/2024 **Project:** BLW01a-F08_W Sunset Ave TCP1 :
: **Traffic Control Suggestion For:** ATLANTIC ENGINEERING (AEG) :
By: Road Runner Safety Services, Inc. : Nathan

Comments:
Drawing not to scale. Traffic control plan must be approved by an engineer. This is a suggestion only. Road Runners Safety Services, Inc. has no liability for this suggested traffic control plan. Actual placement and spacing of all traffic control devices will depend on field conditions and must conform to MUTCD standards.

Legend

- ADA Barricade
- Channelizer
- Conduit
- Flagger (Person)
- Sign
- Vault
- Work Area

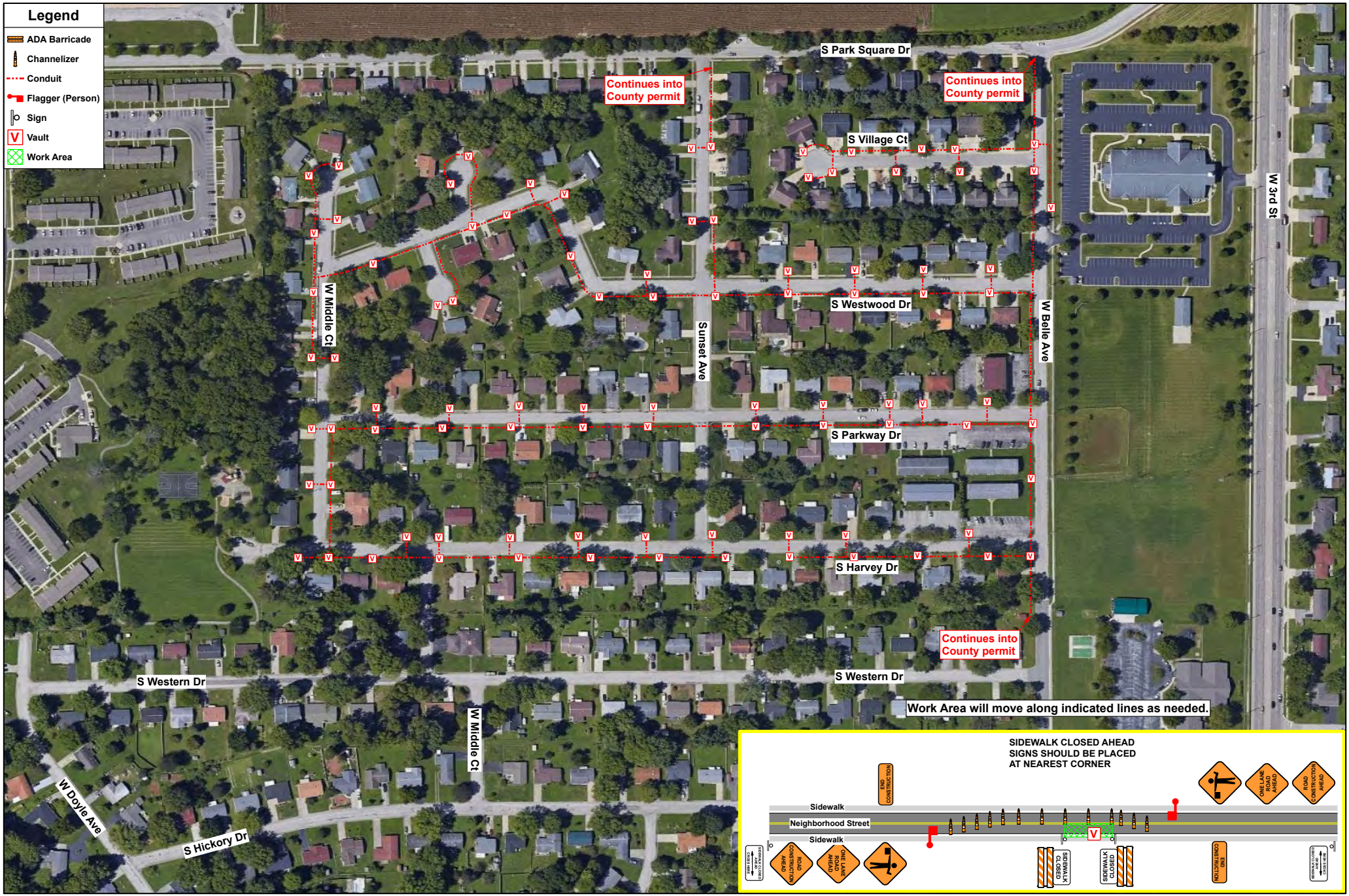

CITY OF BLOOMINGTON
RIGHT-OF-WAY USE PERMIT APPLICATION

401 N Morton Street, Suite 130
P.O. Box 100
Bloomington, IN 47402

Phone: (812) 349-3913
Fax: (812) 349-3520
Email:
engineering@bloomington.in.gov

☑ ROW EXCAVATION ☑ ROW USE

ADDRESS OF ROW ACTIVITY: BLW01a-F08_W Sunset Ave

A. APPLICANT/AGENT INFORMATION:

APPLICANT NAME: Bret Simons
E-MAIL: bret.simons@aeg.cc
COMPANY: Atlantic Engineering Group
ADDRESS: P.O. Box 349
CITY, STATE, ZIP: Buford, GA 30515
24-HR EMERGENCY CONTACT NAME: (706)654-2298
24-HR CONTACT PHONE #:
INSURANCE #*: TB5-691-473497-082 COMPANY: ACORD
BOND#*: 1160465 COMPANY: LEXON
* INSURANCE & BOND MUST BE ON FILE WITH THE CITY BEFORE PERMIT WILL BE ISSUED

****SUBCONTRACTOR INFORMATION****

(LIST ALL COMPANIES WORKING UNDER PRIMARY CONTRACTOR PERMIT)

COMPANY NAME:

B. WORK DESCRIPTION:

☐ POD/DUMPSTER ☐ CRANE ☐ SCAFFOLDING ☑ CONSTRUCTION USE*
(EXPLAIN): Excavation
*EXCAVATION, LONG TERM USE FOR STORAGE OF MATERIAL/EQUIPMENT/WALKAROUND

C. RIGHT OF WAY TO BE USED/CLOSED:

STREET NAME 1: W Sunset Ave
1ST INTERSECTING STREET NAME:
2ND INTERSECTING STREET NAME:
☐ ROAD CLOSURE ☑ LANE CLOSURE 1 ☑ 2 ☐ 3 ☐
☑ SIDEWALK* ☐ BIKE LANE ☐ OTHER
TRANSIT STOP? ☐ Y ☐ N PARKING LANE(S)** ☐ Y ☐ N **NON-METERED
START DATE: Sept 5th END DATE: # OF DAYS*: 90

STREET NAME 2:
1ST INTERSECTING STREET NAME:
2ND INTERSECTING STREET NAME:
☐ ROAD CLOSURE ☐ LANE CLOSURE 1 ☐ 2 ☐ 3 ☐ ☐
☐ SIDEWALK* ☐ BIKE LANE ☐ OTHER
TRANSIT STOP? ☐ Y ☐ N PARKING LANE(S)** ☐ Y ☐ N **NON-METERED
START DATE: END DATE: # OF DAYS*:

*SIDEWALK CLOSURES FOR A PERIOD OR PERIODS TOTALING 24HRS OR MORE SHALL INSTALL A WALKAROUND UNLESS OTHERWISE APPROVED DURING REVIEW

STANDARD CLOSURE HOURS MON-FRI*: 9:00 AM - 3:00 PM & 6:00 PM - 9:00 PM

STANDARD CLOSURE HOURS ☑ *NON-STANDARD CLOSURE HOURS ☐
REQUESTED CLOSURE HOURS: AM - PM
***non-standard hours may not be allowed near schools, on arterials, or other circumstances and are subject to approval during the permitting process**
BMC 14.09.040 allows work from 6 AM to 10 PM without violating the noise ordinance (7AM to 9PM for pneumatic hammers)

D. TRAFFIC CONTROL DEVICES*:

☑	CONES	☐	ARROWBOARD
☐	LIGHTED BARRELS	☑	TYPE 3 BARRICADES
☑	FLAGGERS	☐	BPD OFFICER

*PROVIDING MUTCD COMPLIANT TEMPORARY TRAFFIC CONTROL DEVICES AND MAINTENANCE OF TRAFFIC (MOT)PLAN IS YOUR RESPONSIBILITY AND REQUIRED
See page 3 for additional MOT resources; the graph paper can be used for your MOT site plan if needed or you can submit a separate sheet

E. METERED PARKING SPACES NEEDED: ☐ Y ☐ N

IT IS THE RESPONSIBILITY OF THE APPLICANT TO RESERVE PARKING METER(S) APPLICATION LOCATED: https://bloomington.in.gov/transportation/parking/ moving OR CONTACT PARKING SERVICES WITH QUESTIONS AT (812)349-3436

F. IS THIS A ☐ CBU* ☐ COUNTY* ☐ IU* ☐ NP* PROJECT?

PROJECT NAME: BLW01a-F08_W Sunset Ave
PROJECT #: BLW01a-F08_W Sunset Ave
PROJECT MGR.: Nate Higgins
PROJECT MGR. #: 812.360.8597
***CBU = CITY OF BLOOMINGTON UTILITIES *COUNTY = MONROE COUNTY**
***IU= INDIANA UNIVERSITY *NP= NOT-FOR-PROFIT AGENCY**

G. EXCAVATIONS:

SQ FT OF PAVEMENT* EXCAVATIONS : N/A
*PAVEMENT INCLUDES: IN OR UNDER CONCRETE, OR ASPHALT INCLUDING CURBS
SQ FT OF NON-PAVEMENT* EXCAVATIONS: 236.70 Sq Ft
*DIRT, GRASS, GRAVEL, LANDSCAPE AREA OR OTHER UNPAVED SURFACE
LINEAL FT OF BORE*: 9,614 Lineal Ft
*BORE PITS SHALL BE CALCULATED AS SQ FT EXCAVATIONS
OF POLE INSTALLATIONS/REMOVAL: N/A
SQ FT OF SIDEWALK RECONSTRUCTION*: N/A
*CONCRETE OR ASPHALT SIDEWALK/PATH BEING IMPROVED/REPLACED
SQ FT OF SIDEWALK NEW CONSTRUCTION*: N/A
*CONCRETE OR ASPHALT SIDEWALK/PATH THAT IS NEW INFRASTRUCTURE
#RESIDENTIAL DRIVEWAY INSTALLATION: N/A

Indiana 811 Know what's below. Call before you dig.

TO SUBMIT A LOCATE REQUEST 24 HRS A DAY,
7 DAYS A WEEK
CALL 811 OR 800-382-5544
CALL 2 WORKING DAYS BEFORE YOU DIG.
ITS THE LAW.

H. INDEMNIFICATION AGREEMENT:

The petitioner/applicant hereby agrees to hold harmless, defend and to indemnify the City of Bloomington from or against all claims, action, damages and expenses, including but not limited to reasonable attorney's fees or any alleged injury and/or death to any person or damage to any property arising, or alleged to have arisen out of any act of commission or omission on the part of the petitioner/applicant, his/her heirs, successors, or assigns regardless of whether such acts are the direct or indirect result of the public right-of-way use pursuant to this permit grant.

I AFFIRM, UNDER THE PENALTIES FOR PERJURY, THAT THE FOREGOING REPRESENTATIONS ARE TRUE.

PRINT NAME: Bret Simons
SIGNATURE: Bret Simons
DATE: 7/24/2024

For Administration Use Only (applicable to CLOSURE approval)

Approved By: ☐ BPW ☐ City Engineer ☐ Director Date:

Staff Representative: Phone#: Date:

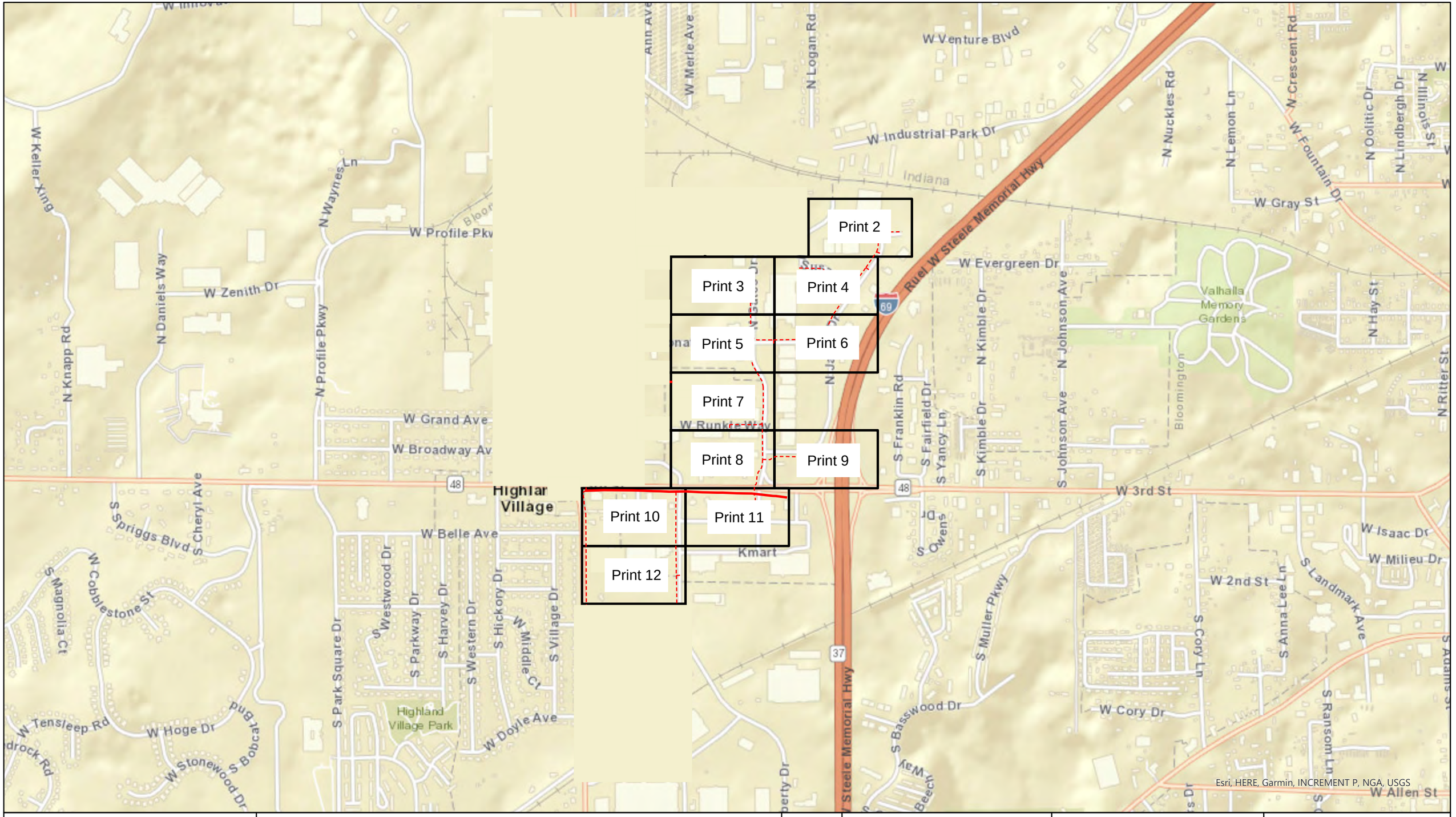

AEG

0 500 1,000 2,000 Feet

Legend BLW01a-F09_ W Jacob Dr

- Proposed Aerial
- Conduit
- Grids

N

City of Bloomington, IN Permit:
Design View

INI	BY	DATE	DESCRIPTION

Indiana811

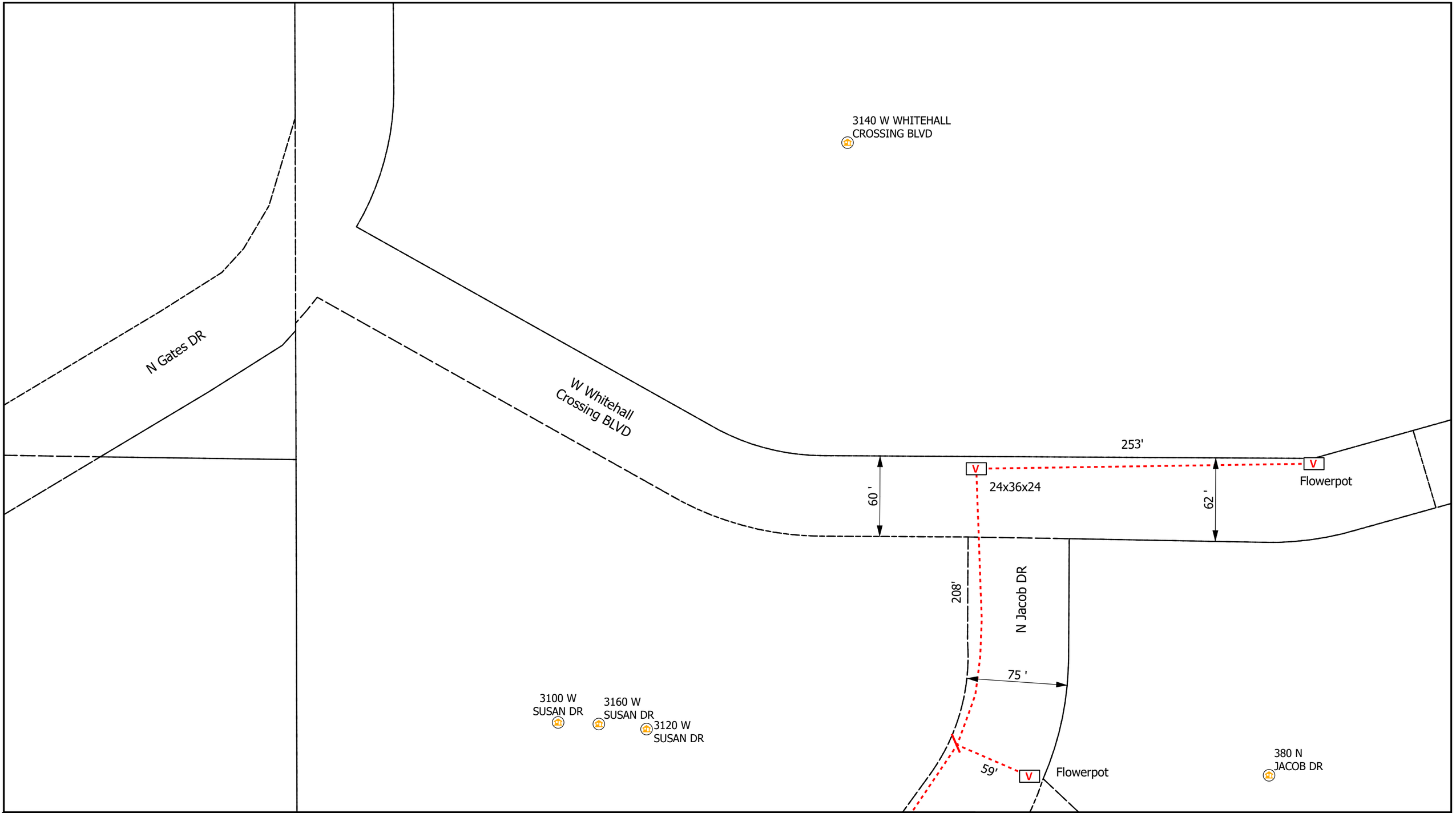

AEG

0 20 40 80 Feet

Legend

- Poles
- Vaults
- Overhead Strand
- Conduit
- Risers
- Address
- Anchor
- Sidewalk
- Bloomington_Parcels
- Grids

All Flowerpots 12" DIA

N

City of Bloomington, IN Permit: Design View

INI	BY	DATE	DESCRIPTION

Indiana 811

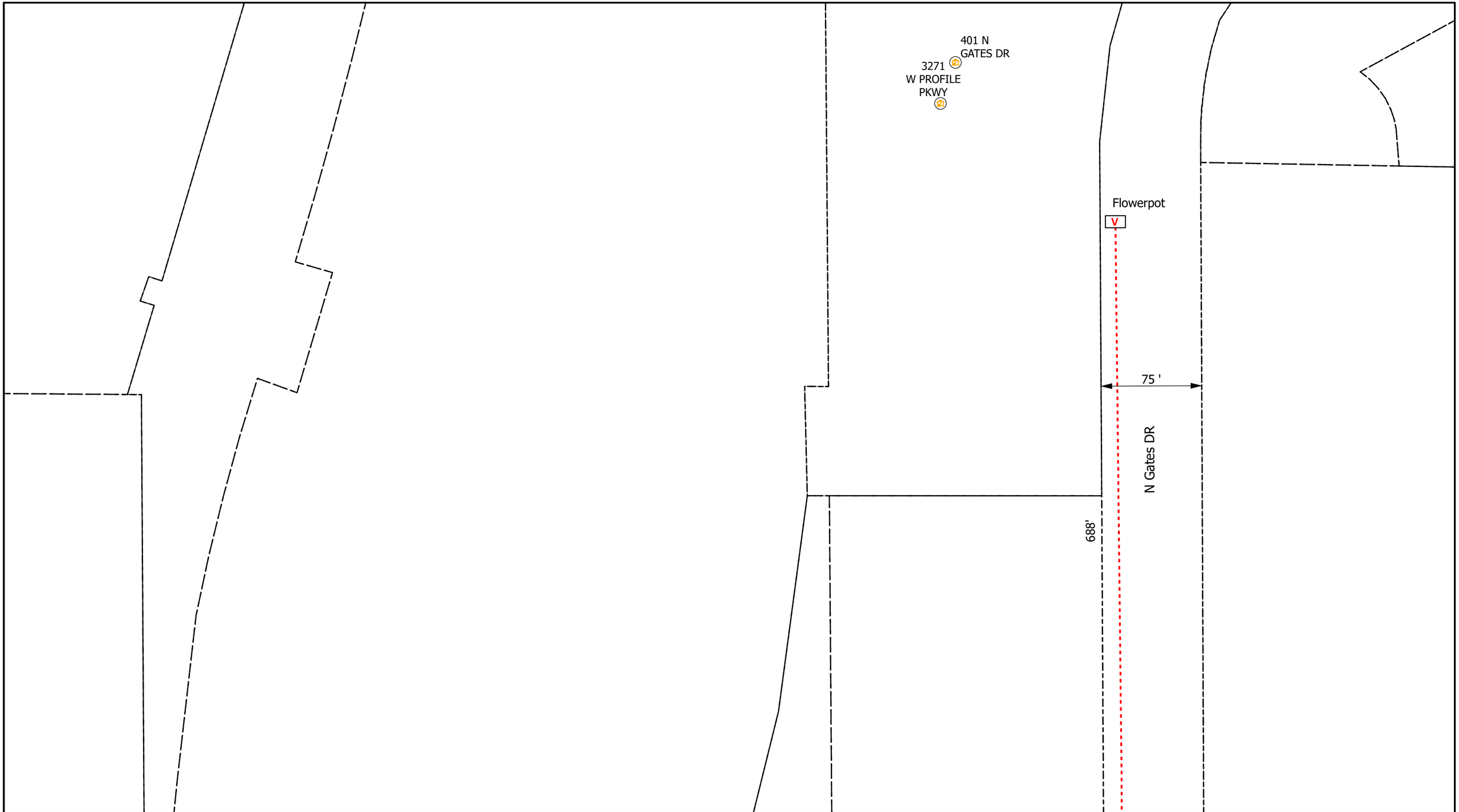

AEG

0 20 40 80 Feet

Legend

- Poles
- Vaults
- Overhead Strand
- Conduit
- Risers
- Address
- Anchor
- Sidewalk
- Bloomington_Parcels
- Grids

All Flowerpots 12" DIA

N

City of Bloomington, IN Permit:
Design View

INI	BY	DATE	DESCRIPTION

Indiana811

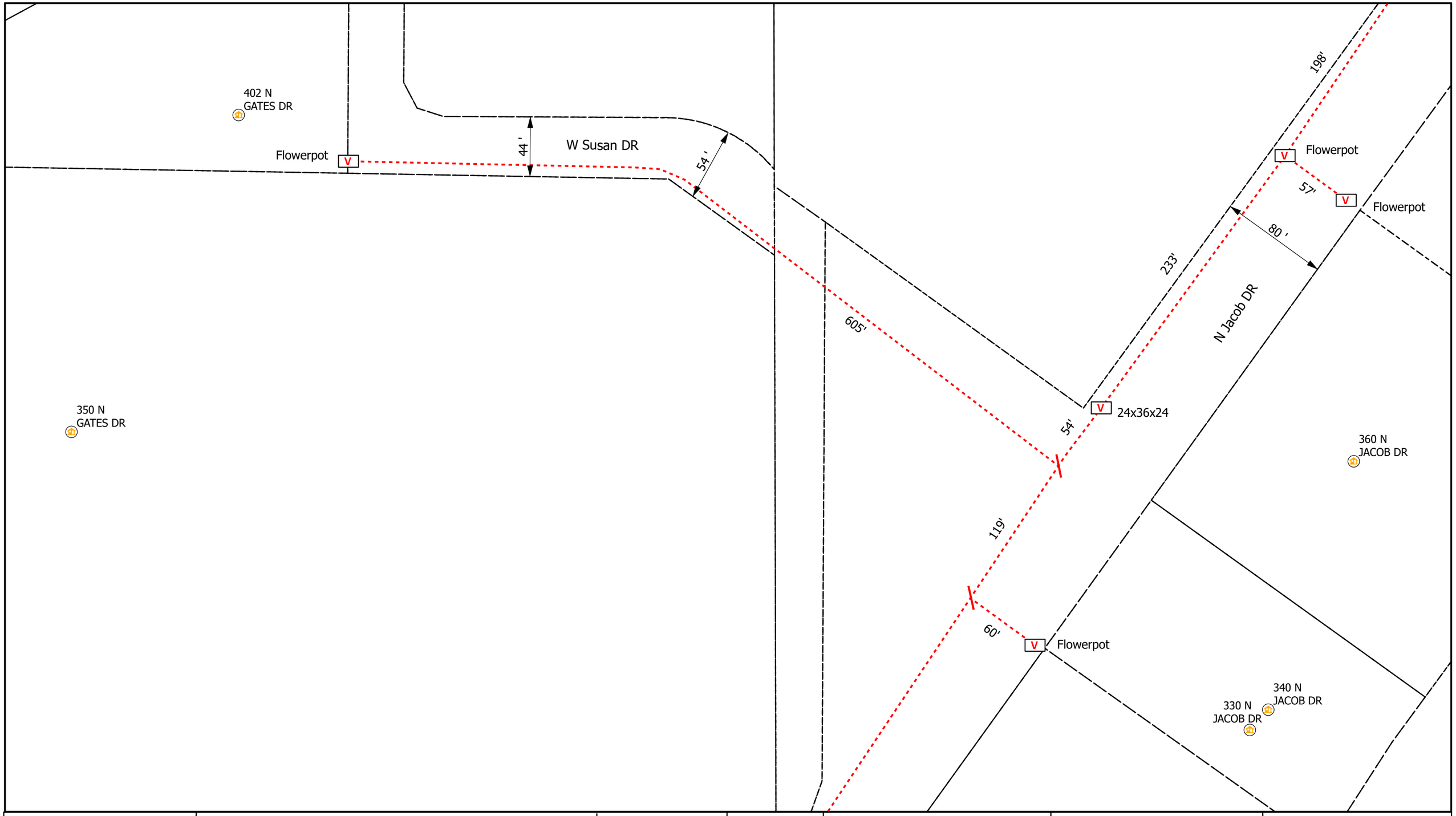

AEG

0 20 40 80 Feet

Legend

- Poles
- Vaults
- Overhead Strand
- Conduit
- Risers
- Address
- Anchor
- Sidewalk
- Bloomington_Parcels
- Grids

All Flowerpots 12" DIA

N

City of Bloomington, IN Permit:
Design View

INI	BY	DATE	DESCRIPTION

Indiana811

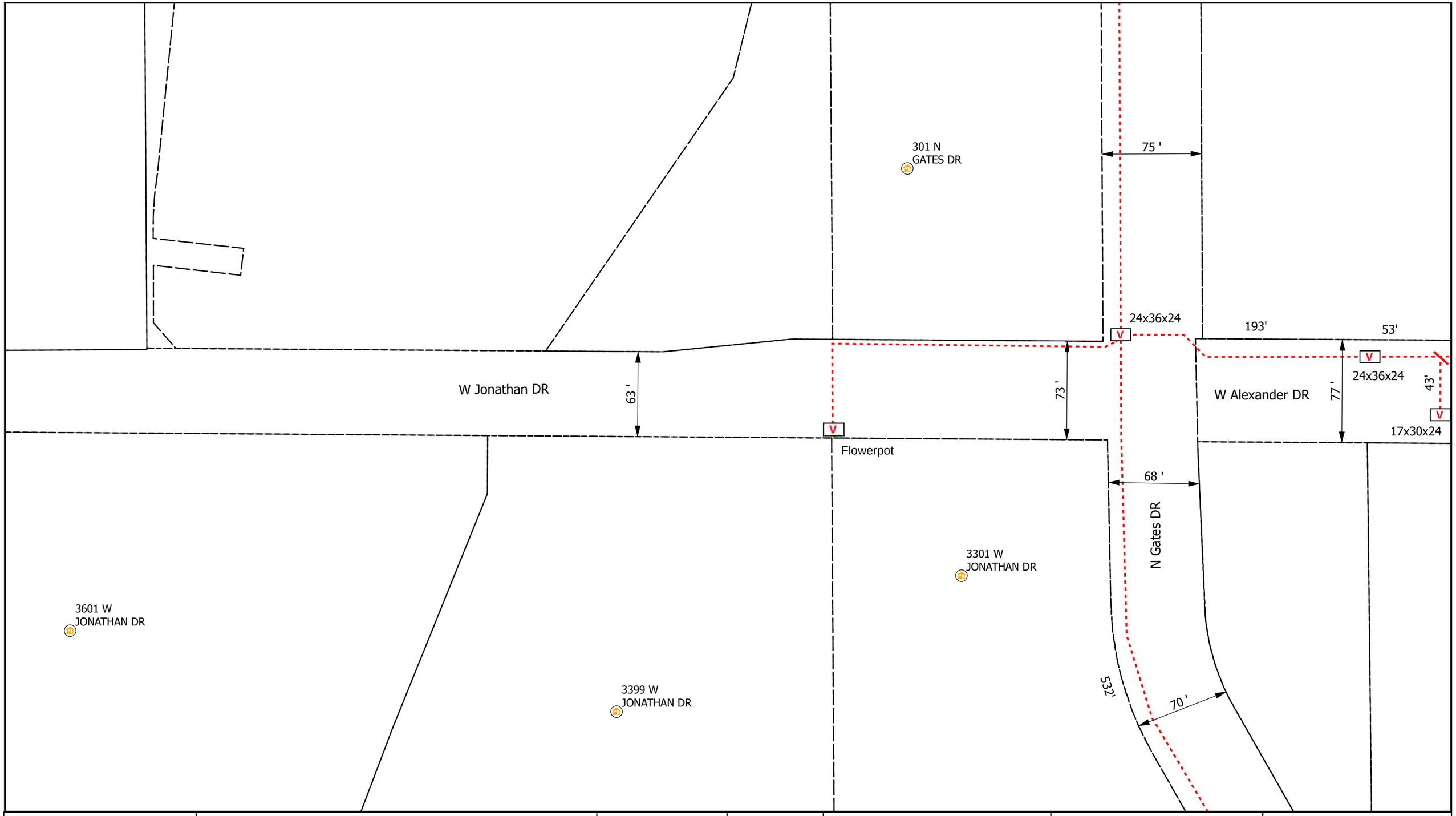

AEG

0 20 40 80 Feet

Legend

- Poles
- Vaults
- Overhead Strand
- Conduit
- Risers
- Address
- Anchor
- Sidewalk
- Bloomington_Parcels
- Grids

All Flowerpots 12" DIA

N

City of Bloomington, IN Permit:
Design View

INI	BY	DATE	DESCRIPTION

Indiana811

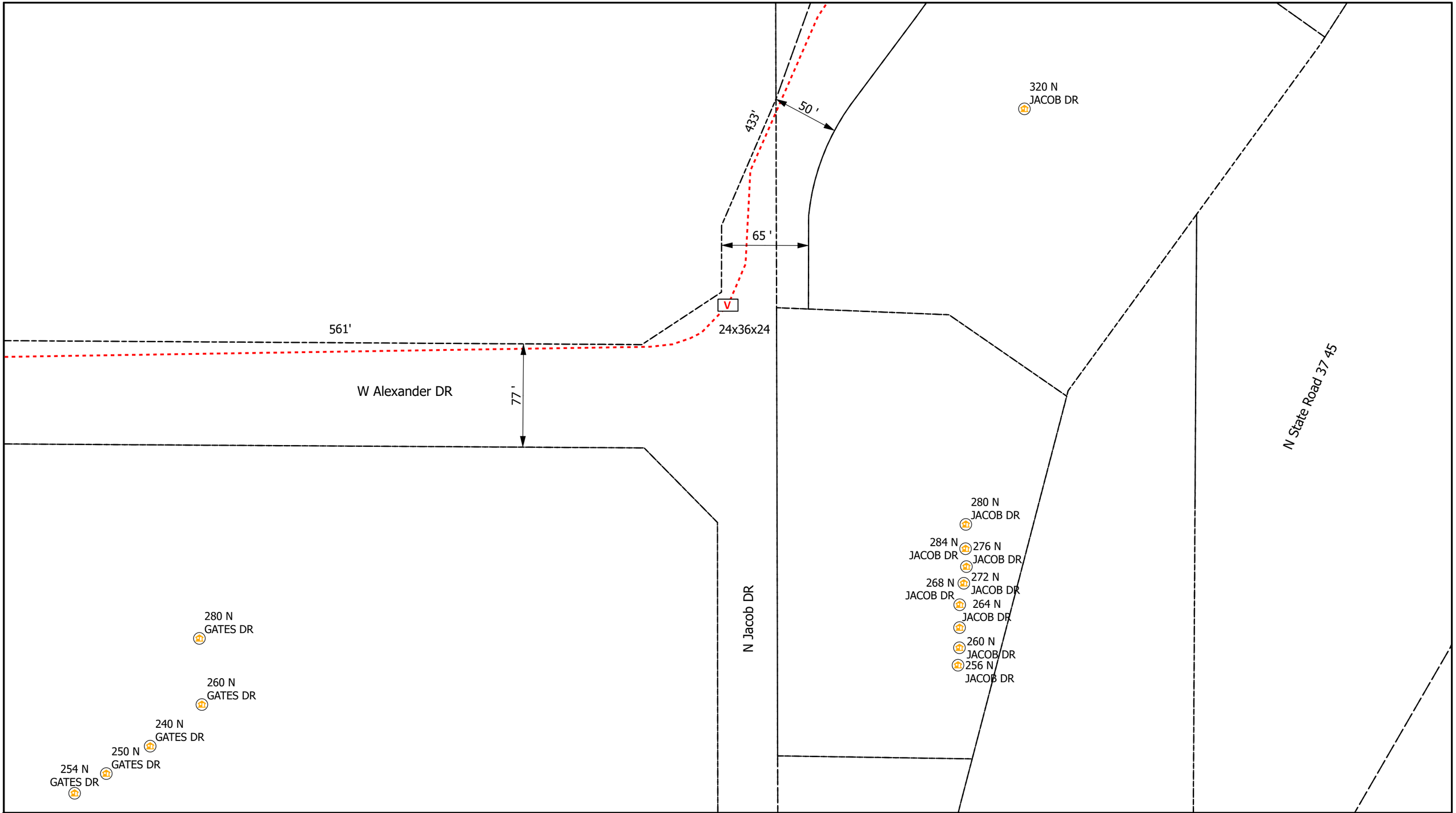

AEG

0 20 40 80 Feet

Legend

- Poles
- Vaults
- Overhead Strand
- Conduit
- Risers
- Address
- Anchor
- Sidewalk
- Bloomington_Parcels
- Grids

All Flowerpots 12" DIA

N

City of Bloomington, IN Permit:
Design View

INI	BY	DATE	DESCRIPTION

Indiana 811

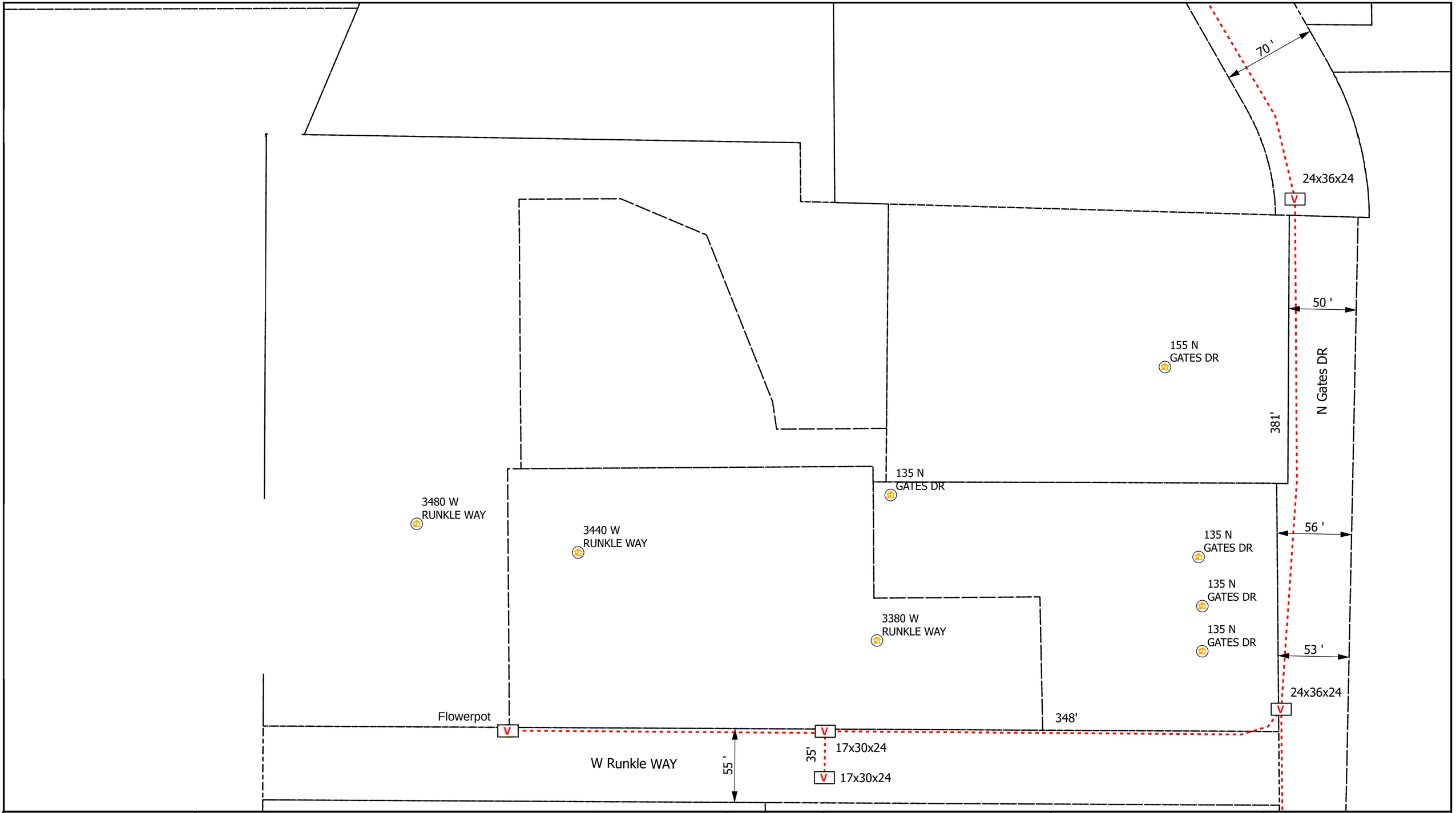

AEG

0 20 40 80 Feet

Legend

- Poles
- Vaults
- Overhead Strand
- Conduit
- Risers
- Address
- Anchor
- Sidewalk
- Bloomington_Parcels
- Grids

All Flowerpots 12" DIA

N

City of Bloomington, IN Permit:
Design View

INI	BY	DATE	DESCRIPTION

Indiana811

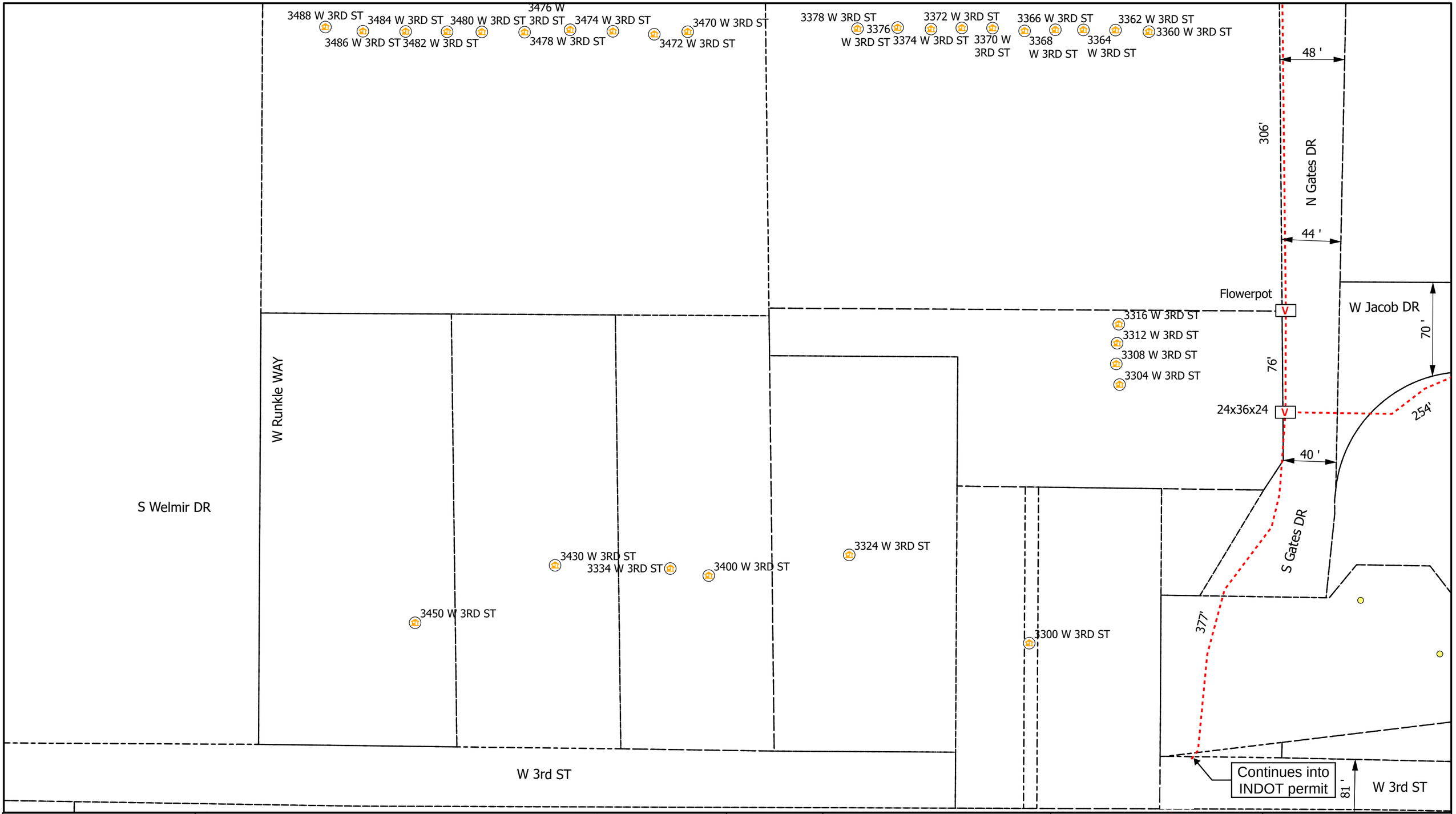

AEG

0 20 40 80 Feet

Legend

- Poles
- Vaults
- Overhead Strand
- Conduit
- Risers
- Address
- Anchor
- Sidewalk
- Bloomington_Parcels
- Grids

All Flowerpots 12" DIA

N

City of Bloomington, IN Permit:
Design View

INI	BY	DATE	DESCRIPTION

Indiana811

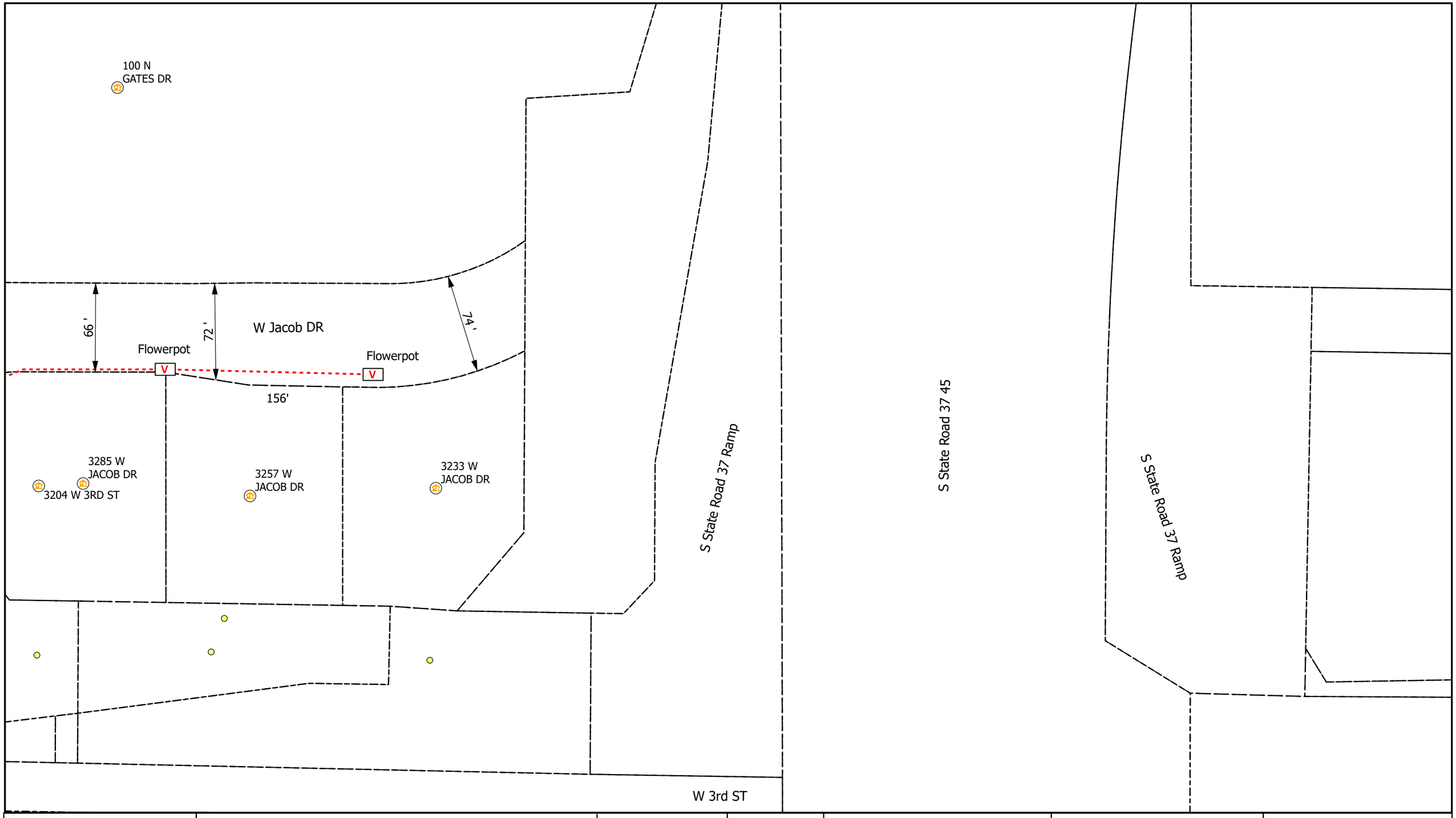

AEG

0 20 40 80 Feet

Legend

- Poles
- Vaults
- Overhead Strand
- Conduit
- Risers
- Address
- Anchor
- Sidewalk
- Bloomington_Parcels
- Grids

All Flowerpots 12" DIA

N

City of Bloomington, IN Permit:
Design View

INI	BY	DATE	DESCRIPTION

Indiana811

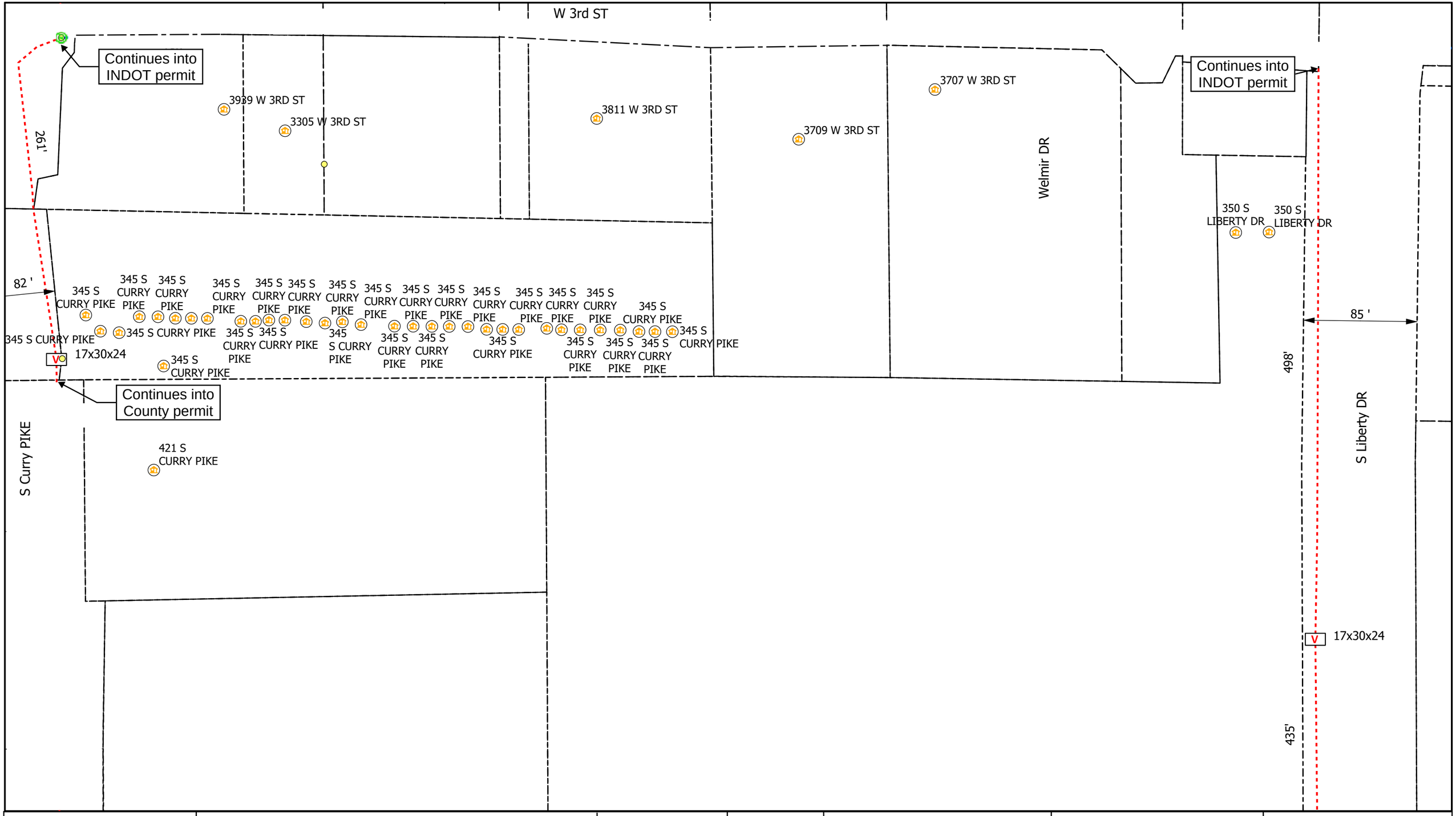

AEG

0 20 40 80 Feet

Legend

- Poles
- Vaults
- Overhead Strand
- Conduit
- Risers
- Address
- Anchor
- Sidewalk
- Bloomington_Parcels
- Grids

All Flowerpots 12" DIA

N

City of Bloomington, IN Permit:
Design View

INI	BY	DATE	DESCRIPTION

Indiana811

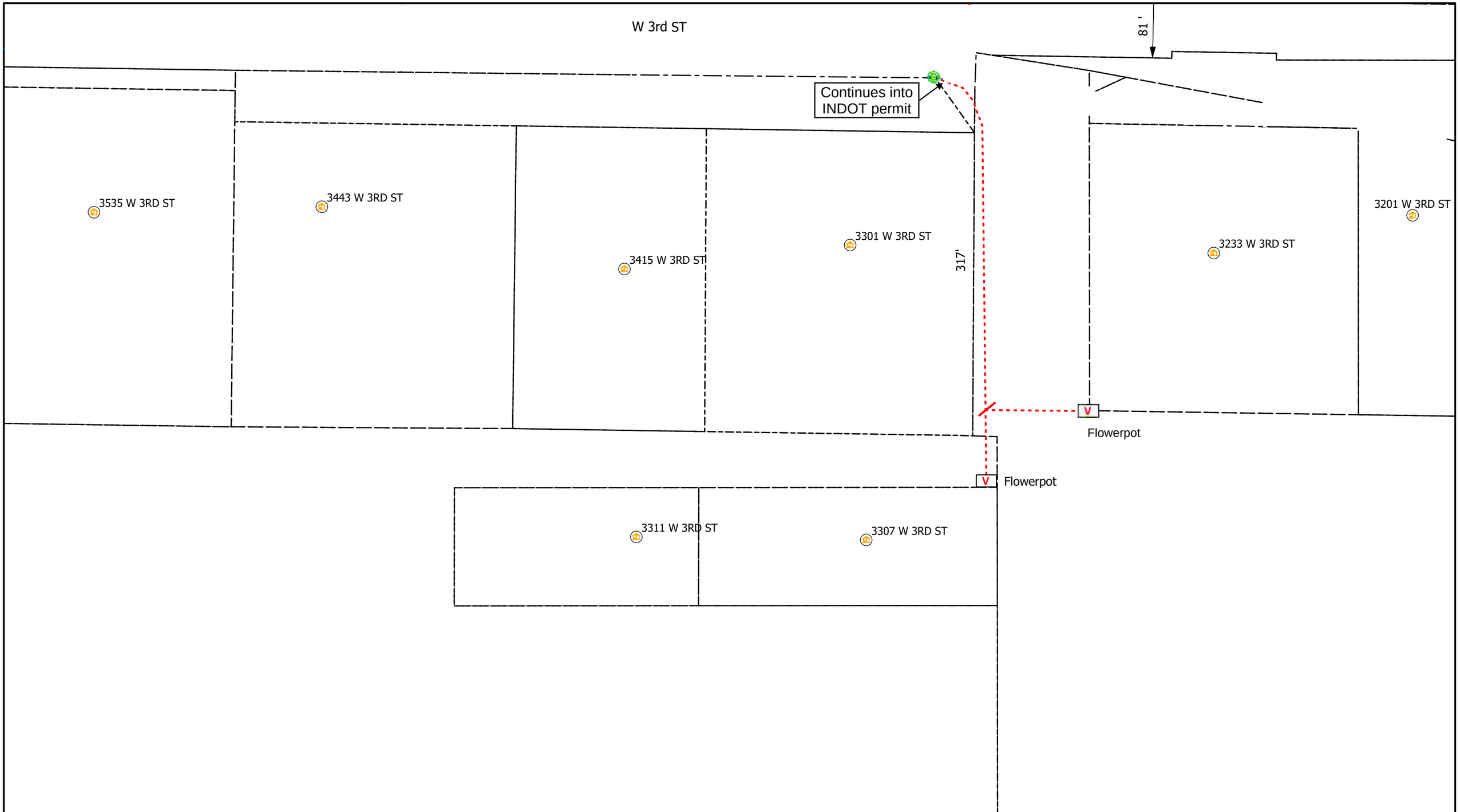

0 20 40 80 Feet

Legend

- Poles
- Vaults
- Overhead Strand
- Conduit
- Risers
- Address
- Anchor
- Sidewalk
- Bloomington_Parcels
- Grids

All Flowerpots 12" DIA

N

City of Bloomington, IN Permit:
Design View

INI	BY	DATE	DESCRIPTION

62 '

Flowerpot

V

Continues into
County Permit

52'

65 '

S Liberty DR

617 S
CURRY PIKE

S Curry PIKE

725 S
CURRY PIKE

775 S
CURRY PIKE

AEG

0 20 40 80 Feet

Legend

- Poles
- Vaults
- Overhead Strand
- Conduit
- Risers
- Address
- Anchor
- Sidewalk
- Bloomington_Parcels
- Grids

All Flowerpots 12" DIA

N

City of Bloomington, IN Permit:
Design View

INI	BY	DATE	DESCRIPTION

Indiana811

CONCEPTUAL SIDE VIEW

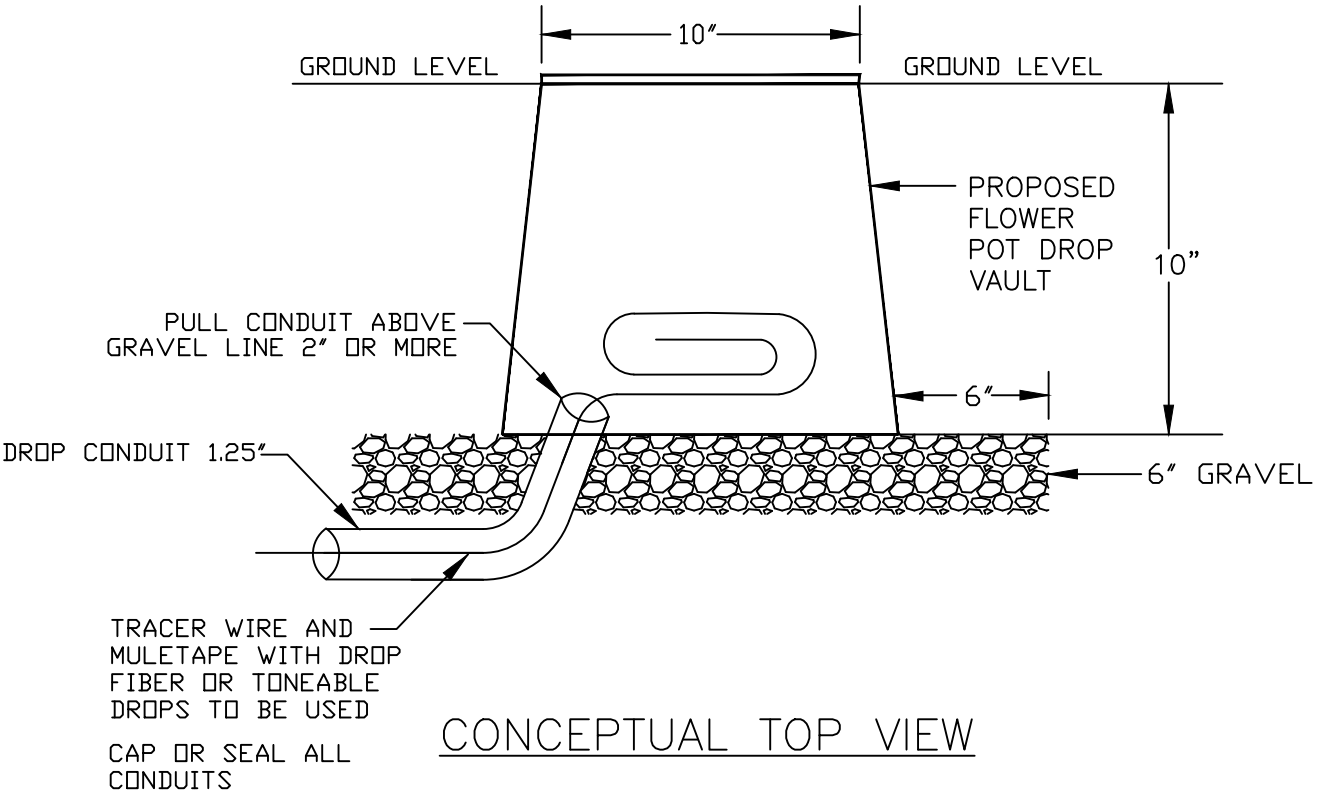

CONCEPTUAL TOP VIEW

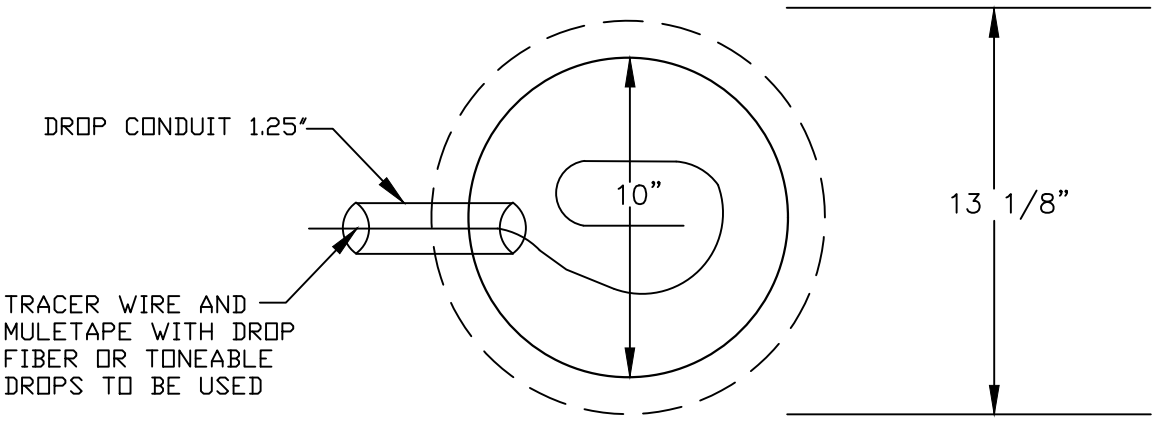

AEG

DATE: 02/02/2022
REVISION: CLM

SCALE: NTS

FLOWER POT

30”x48” PC UNIT, 2PC TIER 15/22

18”, 24”, and 36” HEIGHT

APC

AMERICAN POLYMER COMPANY

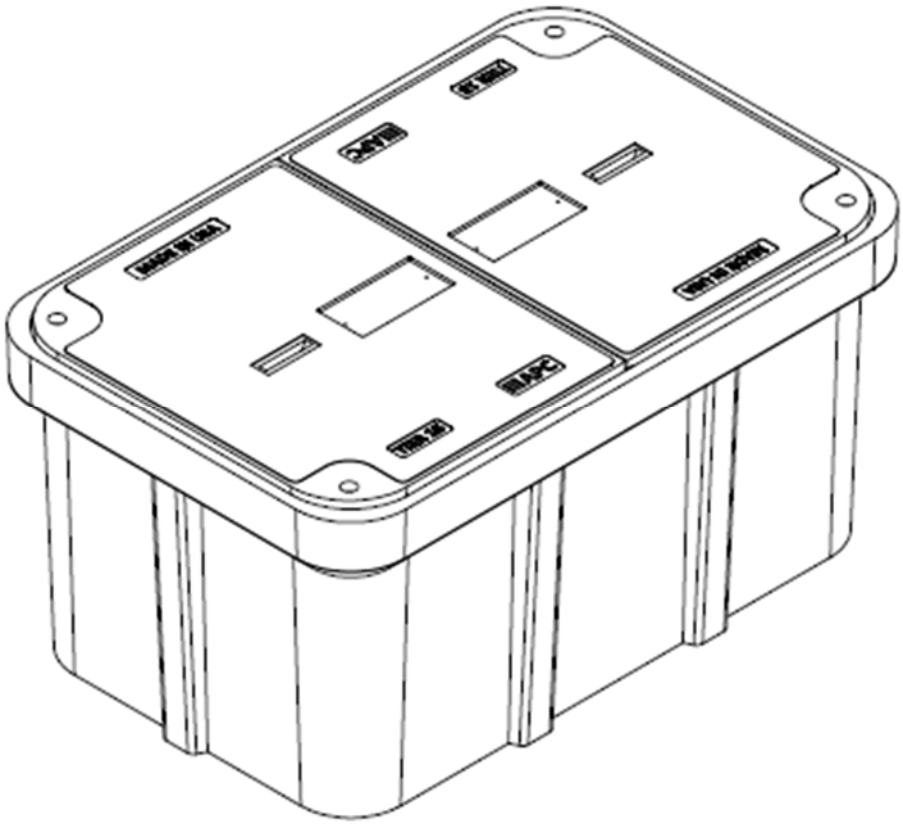

Description	Nominal Size	ANSI Tier	Part Number	Estimated Weight
PC Unit – TIER 15	30”x48”x18”	Tier 15	P304818HU15...	460 lbs.
PC Unit – TIER 22	30”x48”x18”	Tier 22	P304818HU22...	525 lbs.
PC Unit – TIER 15	30”x48”x24”	Tier 15	P304824HU15...	510 lbs.
PC Unit – TIER 22	30”x48”x24”	Tier 22	P304824HU22...	575 lbs.
PC Unit – TIER 15	30”x48”x36”	Tier 15	P304836HU15...	615 lbs.
PC Unit – TIER 22	30”x48”x36”	Tier 22	P304836HU22...	680 lbs.

PROUDLY MADE IN USA

www.apcunderground.com

30”x48” PC UNIT, 2PC TIER 15/22

18”, 24”, and 36” HEIGHT

APC

AMERICAN POLYMER COMPANY

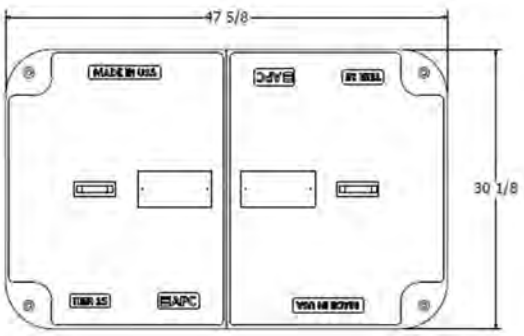

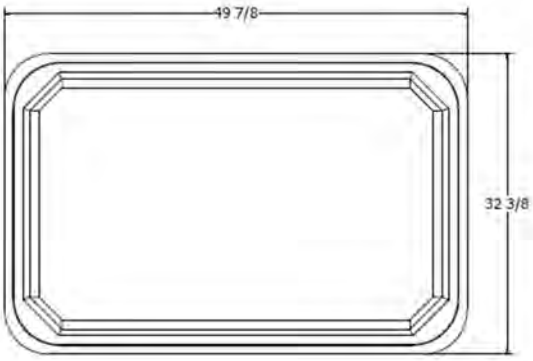

Components	Nominal Size	ANSI Tier	Part Number	Estimated Weight
Replacement Box	30”x48”x18”	Tier 22	P304818B22	185 lbs.
Replacement Box	30”x48”x24”	Tier 22	P304824B22	235 lbs.
Replacement Box	30”x48”x36”	Tier 22	P304836B22	340 lbs.
Replacement Lids – T15	30”x48” (half)	Tier 15	Various	150 lbs.
Replacement Lids – T22	30”x48” (half)	Tier 22	Various	170 lbs.

Bolt options

Hex Head

Machine Thread

Penta Head

Auger Thread

PROUDLY MADE IN USA

www.apcunderground.com

24”x36” PC UNIT, TIER 15/22

18”, 24”, 30”, and 36” HEIGHT

APC

AMERICAN POLYMER COMPANY

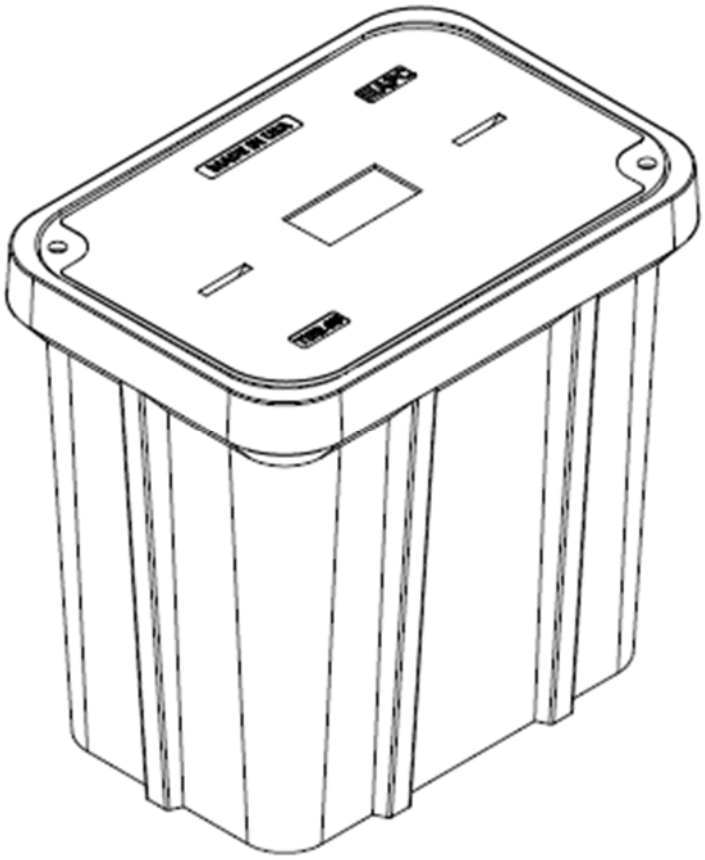

Description	Nominal Size	ANSI Tier	Part Number	Estimated Weight
PC Unit – TIER 15	24x36”x18”	Tier 15	P243618U15...	335 lbs.
PC Unit – TIER 22	24x36”x18”	Tier 22	P243618U22...	355 lbs.
PC Unit – TIER 15	24x36”x24”	Tier 15	P243624U15...	365 lbs.
PC Unit – TIER 22	24x36”x24”	Tier 22	P243624U22...	385 lbs.
PC Unit – TIER 15	24x36”x30”	Tier 15	P243630U15...	395 lbs.
PC Unit – TIER 22	24x36”x30”	Tier 22	P243630U22...	415 lbs.
PC Unit – TIER 15	24x36”x36”	Tier 15	P243636U15...	425 lbs.
PC Unit – TIER 22	24x36”x36”	Tier 22	P243636U22...	445 lbs.

PROUDLY MADE IN USA

www.apcunderground.com

24”x36” PC UNIT, TIER 15/22

18”, 24”, 30”, and 36” HEIGHT

APC

AMERICAN POLYMER COMPANY

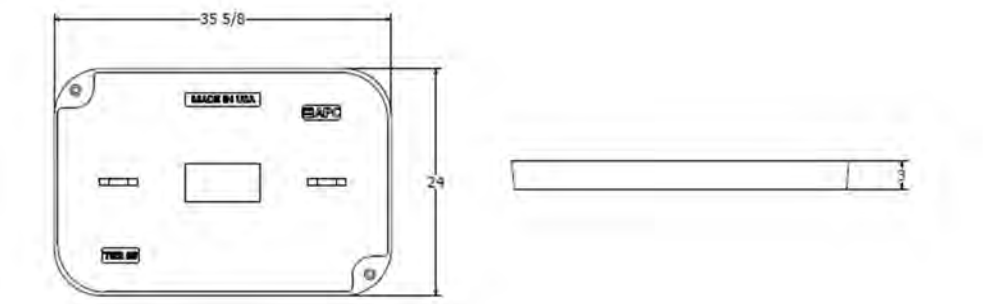

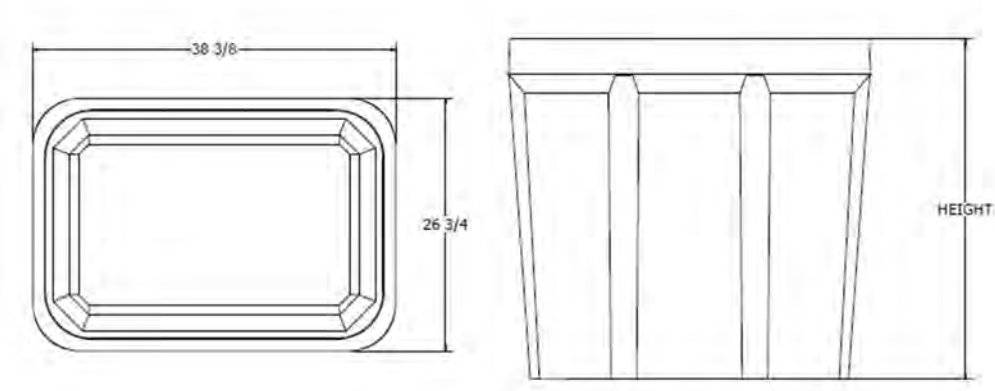

Components	Nominal Size	ANSI Tier	Part Number	Estimated Weight
Replacement Box	24”x36”x18”	Tier 22	P243618B22	165 lbs.
Replacement Box	24”x36”x24”	Tier 22	P243624B22	195 lbs.
Replacement Box	24”x36”x30”	Tier 22	P243630B22	225 lbs.
Replacement Box	24”x36”x36”	Tier 22	P243636B22	255 lbs.
Replacement Lids – T15	24”x36”	Tier 15	Various	170 lbs.
Replacement Lids – T22	24”x36”	Tier 22	Various	190 lbs.

Bolt options

Hex Head

Machine Thread

Penta Head

Auger Thread

PROUDLY MADE IN USA

www.apcunderground.com

17”x30” PC UNIT, TIER 15/22

12”, 18”, 24”, and 30” HEIGHT

APC

AMERICAN POLYMER COMPANY

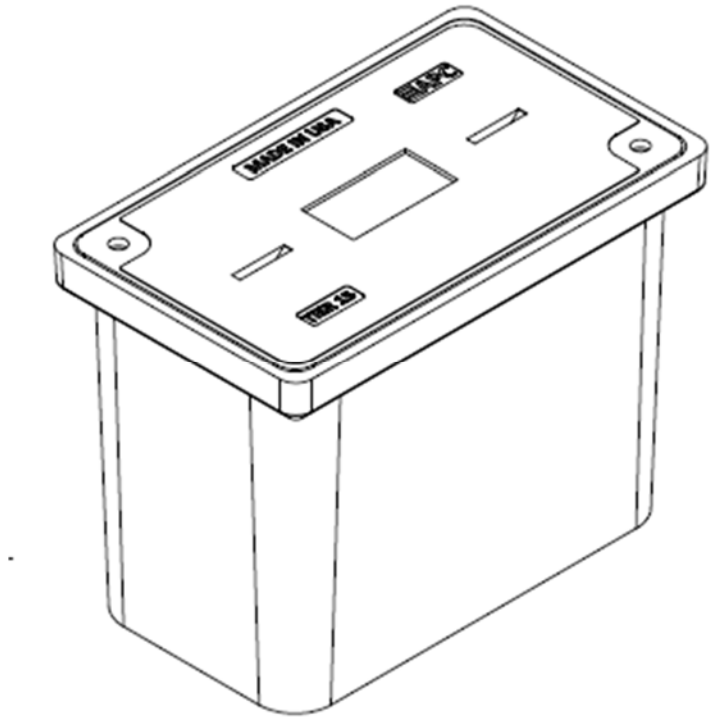

Description	Nominal Size	ANSI Tier	Part Number	Estimated Weight
PC Unit – TIER 15	17”x30”x12”	Tier 15	P173012U15...	138 lbs.
PC Unit – TIER 22	17”x30”x12”	Tier 22	P173012U22...	147 lbs.
PC Unit – TIER 15	17”x30”x18”	Tier 15	P173018U15...	172 lbs.
PC Unit – TIER 22	17”x30”x18”	Tier 22	P173018U22...	181 lbs.
PC Unit – TIER 15	17”x30”x24”	Tier 15	P173024U15...	192 lbs.
PC Unit – TIER 22	17”x30”x24”	Tier 22	P173024U22...	201 lbs.
PC Unit – TIER 15	17”x30”x30”	Tier 15	P173030U15...	217 lbs.
PC Unit – TIER 22	17”x30”x30”	Tier 22	P173030U22...	226 lbs.

PROUDLY MADE IN USA

www.apcunderground.com

17”x30” PC UNIT, TIER 15/22

12”, 18”, 24”, and 30” HEIGHT

APC

AMERICAN POLYMER COMPANY

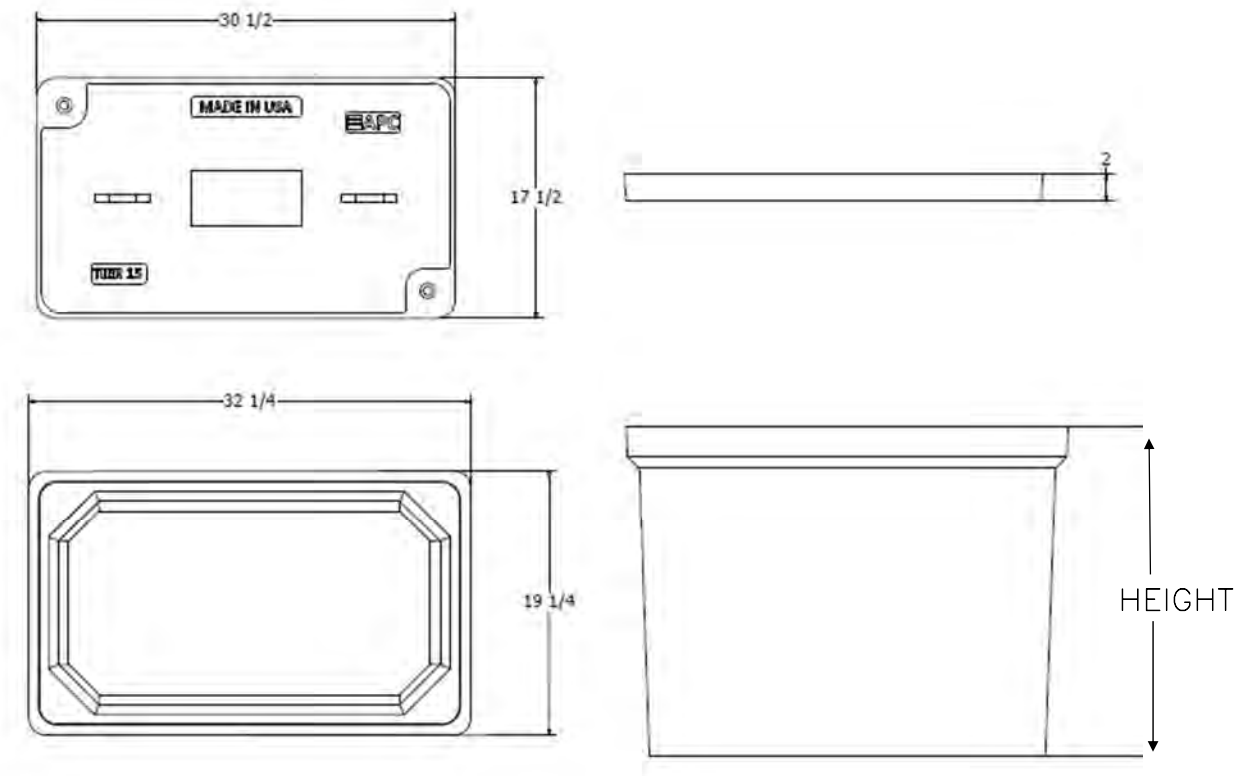

Components	Nominal Size	ANSI Tier	Part Number	Estimated Weight
Replacement Box	17”x30”X12”	Tier 22	P173012B22	66 lbs.
Replacement Box	17”x30”X18”	Tier 22	P173018B22	100 lbs.
Replacement Box	17”x30”x24”	Tier 22	P173024B22	120 lbs.
Replacement Box	17”x30”x30”	Tier 22	P173030B22	145 lbs.
Replacement Lids – T15	17”x30”	Tier 15	Various	72 lbs.
Replacement Lids – T22	17”x30”	Tier 22	Various	81 lbs.

Bolt options

Hex Head

Machine Thread

Penta Head

Auger Thread

PROUDLY MADE IN USA

www.apcunderground.com

33”x60” PC UNIT, 2PC TIER 15/22

36” HEIGHT

APC

AMERICAN POLYMER COMPANY

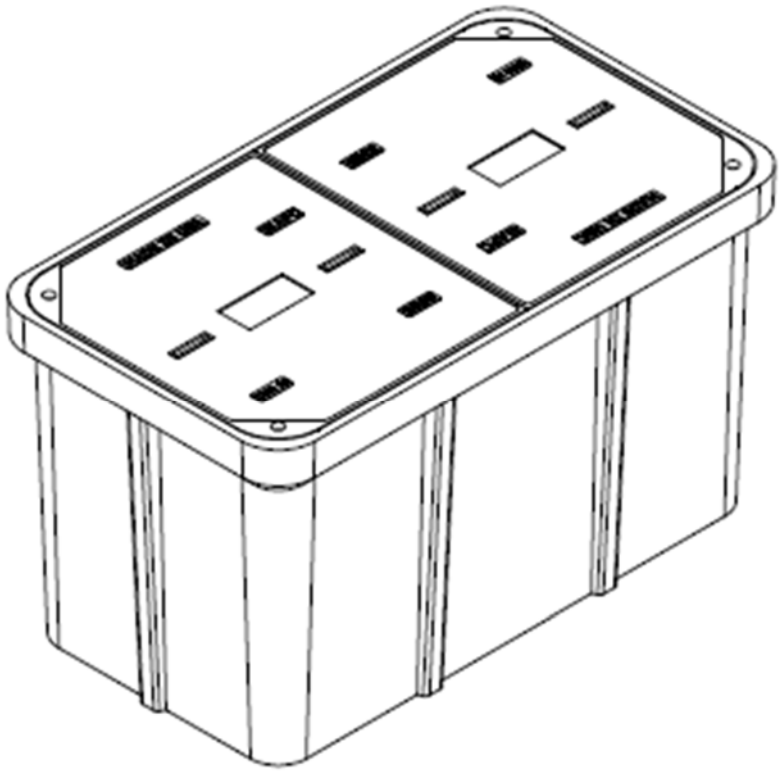

Description	Nominal Size	ANSI Tier	Part Number	Estimated Weight
PC Unit – TIER 15	33”x60”x36”	Tier 15	P336036U15...	930 lbs.
PC Unit – TIER 22	33”x60”x36”	Tier 22	P336036U22...	1030 lbs.

PROUDLY MADE IN USA

www.apcunderground.com

33”x60” PC UNIT, 2PC TIER 15/22

36” HEIGHT

APC

AMERICAN POLYMER COMPANY

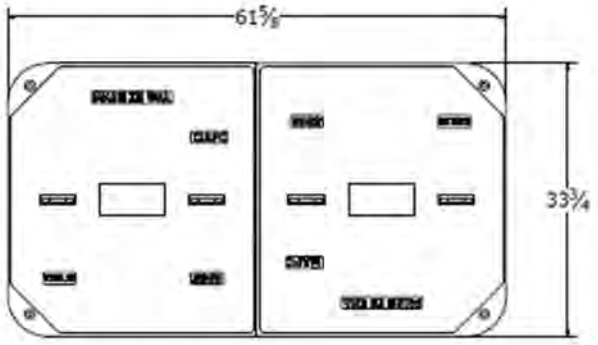

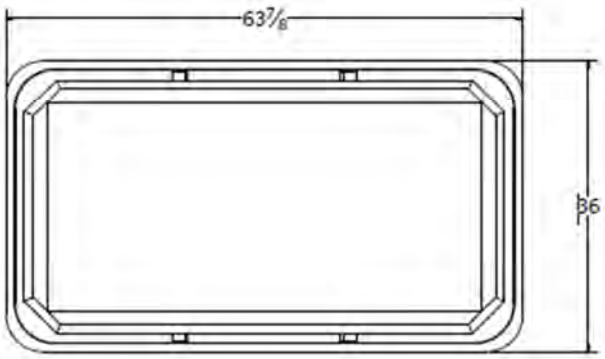

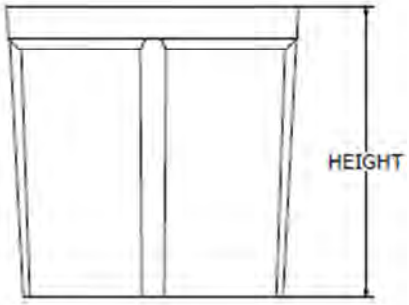

Components	Nominal Size	ANSI Tier	Part Number	Estimated Weight
Replacement Box	33”x60”x36”	Tier 22	P336036B22	530 lbs.
Replacement Lids – T15	33”x60” (half)	Tier 15	Various	200 lbs.
Replacement Lids – T22	33”x60” (half)	Tier 22	Various	250 lbs.

Bolt options

Hex Head

Machine Thread

Penta Head

Auger Thread

PROUDLY MADE IN USA

www.apcunderground.com

Spacing Charts Based on MUTCD Must be Approved by an Engineer

Speed (MPH) Prior To Road Work	SIGN SPACING, FT. Non-Divided Highways	SIGN SPACING, FT. Divided Highways	BUFFER SPACE, FT. Length	TAPER LENGTH, FT. Shoulder (10 ft Width)	TAPER LENGTH, FT. Lane (12 ft Width)	CHANNELIZING SPACING, FT. Through Taper	CHANNELIZING SPACING, FT. Through Buffer/Work Area
0-35	200	200	250	70	245	35	50
40-45	350	500	360	150	540	40	80
50-55	500	1000	495	185	660	50	100
60-70	SA-1000, SB-1500, SC-2640		730	235	840	60	120
	Urban Low Speed - 100 FT						

APPROVED/ACCEPTED BY:
ENGINEER, OWNER, or PRIME CONTRACTOR

☐ **Check for Notice to Proceed.**

Signature: _____

Company: _____

Date: 3/18/2024 **Project:** BLW01a-F09_ W Jacob Dr TCP1 :
: **Traffic Control Suggestion For:** ATLANTIC ENGINEERING (AEG) :
By: Road Runner Safety Services, Inc. : Nathan

Comments:
Drawing not to scale. Traffic control plan must be approved by an engineer. This is a suggestion only. Road Runners Safety Services, Inc. has no liability for this suggested traffic control plan. Actual placement and spacing of all traffic control devices will depend on field conditions and must conform to MUTCD standards.

Legend

- ADA Barricade
- Channelizer
- Conduit
- Flagger (Person)
- Sign
- Vault
- Work Area

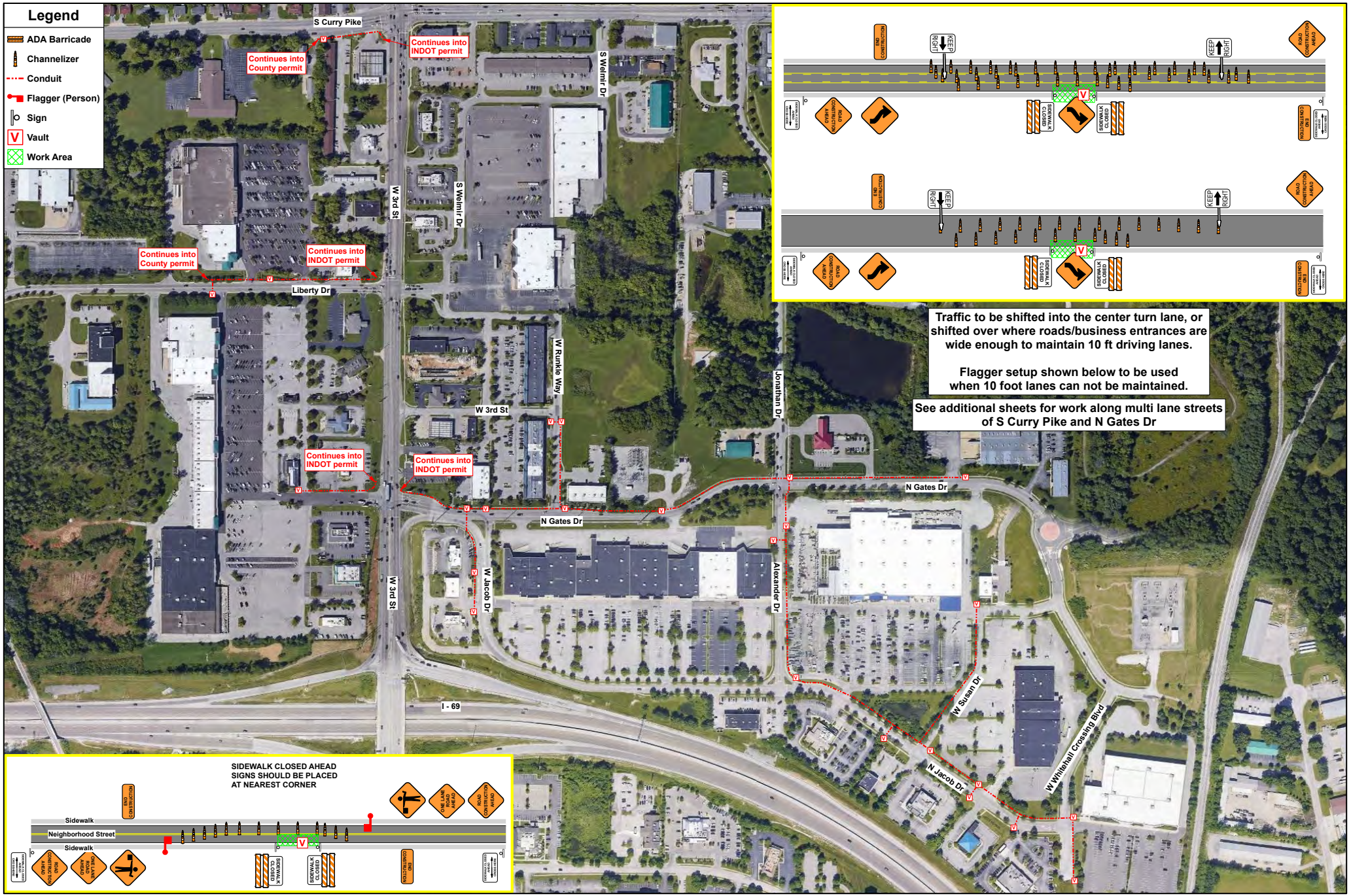

Spacing Charts Based on MUTCD **Must be Approved by an Engineer**

Speed (MPH) Prior To Road Work	SIGN SPACING, FT.		BUFFER SPACE, FT.	TAPER LENGTH, FT.		CHANNELIZING SPACING, FT.	
	Non-Divided Highways	Divided Highways	Length	Shoulder (10 ft Width)	Lane (12 ft Width)	Through Taper	Through Buffer/Work Area
0-35	200	200	250	70	245	35	50
40-45	350	500	360	150	540	40	80
50-55	500	1000	495	185	660	50	100
60-70	SA-1000, SB-1500, SC-2640		730	235	840	60	120
	Urban Low Speed - 100 FT						

APPROVED/ACCEPTED BY:
ENGINEER, OWNER, or PRIME CONTRACTOR
☐ **Check for Notice to Proceed.**

Signature: _____

Company: _____

Date: 3/18/2024 **Project:** BLW01a-F09_ W Jacob Dr TCP2 :
: **Traffic Control Suggestion For:** ATLANTIC ENGINEERING (AEG) :
By: Road Runner Safety Services, Inc. : Nathan

Comments:
Drawing not to scale. Traffic control plan must be approved by an engineer. This is a suggestion only. Road Runners Safety Services, Inc. has no liability for this suggested traffic control plan. Actual placement and spacing of all traffic control devices will depend on field conditions and must conform to MUTCD standards.

Legend
- Channelizer
- Conduit
- Type III Barricade
- Vault
- Work Area

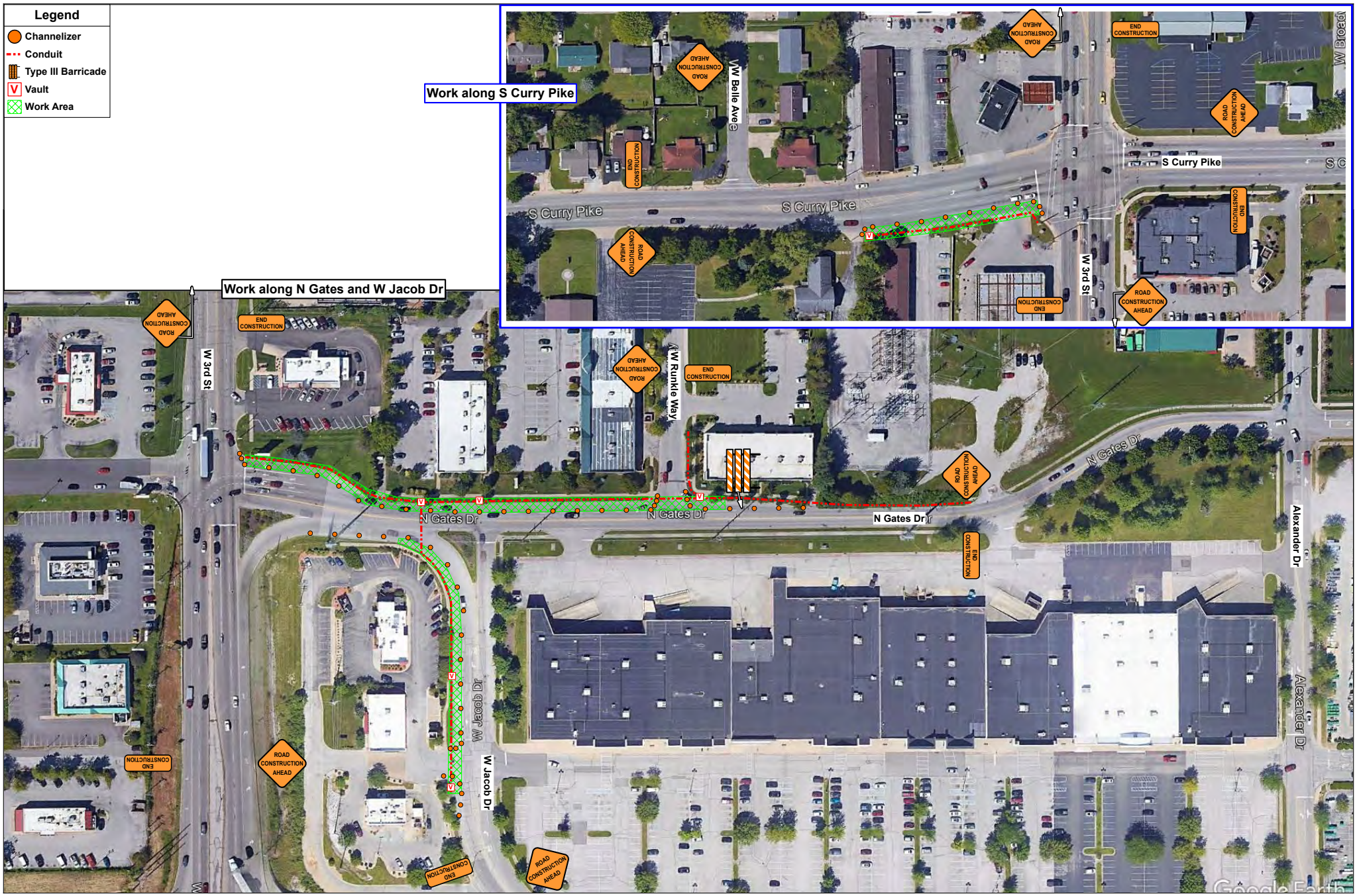

CITY OF BLOOMINGTON
RIGHT-OF-WAY USE PERMIT APPLICATION

401 N Morton Street, Suite 130
P.O. Box 100
Bloomington, IN 47402

Phone: (812) 349-3913
Fax: (812) 349-3520
Email:
engineering@bloomington.in.gov

☑ ROW EXCAVATION ☑ ROW USE

ADDRESS OF ROW ACTIVITY: BLW01a-F09_ W Jacob Dr

A. APPLICANT/AGENT INFORMATION:

APPLICANT NAME: Bret Simons
E-MAIL: bret.simons@aeg.cc
COMPANY: Atlantic Engineering Group
ADDRESS: P.O. Box 349
CITY, STATE, ZIP: Buford, GA 30515
24-HR EMERGENCY CONTACT NAME: (706)654-2298
24-HR CONTACT PHONE #:
INSURANCE #*: TB5-691-473497-082 COMPANY: ACORD
BOND#*: 1160465 COMPANY: LEXON
* INSURANCE & BOND MUST BE ON FILE WITH THE CITY BEFORE PERMIT WILL BE ISSUED

****SUBCONTRACTOR INFORMATION****

(LIST ALL COMPANIES WORKING UNDER PRIMARY CONTRACTOR PERMIT)

COMPANY NAME:

B. WORK DESCRIPTION:

☐ POD/DUMPSTER ☐ CRANE ☐ SCAFFOLDING ☑ CONSTRUCTION USE*
(EXPLAIN): Excavation
*EXCAVATION, LONG TERM USE FOR STORAGE OF MATERIAL/EQUIPMENT/WALKAROUND

C. RIGHT OF WAY TO BE USED/CLOSED:

STREET NAME 1: W Jacob Dr
1ST INTERSECTING STREET NAME:
2ND INTERSECTING STREET NAME:
☐ ROAD CLOSURE ☑ LANE CLOSURE 1 ☑ 2 ☐ 3 ☐
☑ SIDEWALK* ☐ BIKE LANE ☐ OTHER
TRANSIT STOP? ☐ Y ☐ N PARKING LANE(S)** ☐ Y ☐ N **NON-METERED
START DATE: Aug 26th END DATE: # OF DAYS*: 90

STREET NAME 2:
1ST INTERSECTING STREET NAME:
2ND INTERSECTING STREET NAME:
☐ ROAD CLOSURE ☐ LANE CLOSURE 1 ☐ 2 ☐ 3 ☐ ☐
☐ SIDEWALK* ☐ BIKE LANE ☐ OTHER
TRANSIT STOP? ☐ Y ☐ N PARKING LANE(S)** ☐ Y ☐ N **NON-METERED
START DATE: END DATE: # OF DAYS*:

*SIDEWALK CLOSURES FOR A PERIOD OR PERIODS TOTALING 24HRS OR MORE SHALL INSTALL A WALKAROUND UNLESS OTHERWISE APPROVED DURING REVIEW

STANDARD CLOSURE HOURS MON-FRI*: 9:00 AM - 3:00 PM & 6:00 PM - 9:00 PM

STANDARD CLOSURE HOURS ☑ *NON-STANDARD CLOSURE HOURS ☐
REQUESTED CLOSURE HOURS: AM - PM
***non-standard hours may not be allowed near schools, on arterials, or other circumstances and are subject to approval during the permitting process**
BMC 14.09.040 allows work from 6 AM to 10 PM without violating the noise ordinance (7AM to 9PM for pneumatic hammers)

D. TRAFFIC CONTROL DEVICES*:

☑	CONES	☐	ARROWBOARD
☐	LIGHTED BARRELS	☑	TYPE 3 BARRICADES
☑	FLAGGERS	☐	BPD OFFICER

*PROVIDING MUTCD COMPLIANT TEMPORARY TRAFFIC CONTROL DEVICES AND MAINTENANCE OF TRAFFIC (MOT)PLAN IS YOUR RESPONSIBILITY AND REQUIRED
See page 3 for additional MOT resources; the graph paper can be used for your MOT site plan if needed or you can submit a separate sheet

E. METERED PARKING SPACES NEEDED: ☐ Y ☐ N

IT IS THE RESPONSIBILITY OF THE APPLICANT TO RESERVE PARKING METER(S) APPLICATION LOCATED: https://bloomington.in.gov/transportation/parking/ moving OR CONTACT PARKING SERVICES WITH QUESTIONS AT (812)349-3436

F. IS THIS A ☐ CBU* ☐ COUNTY* ☐ IU* ☐ NP* PROJECT?

PROJECT NAME: BLW01a-F09_ W Jacob Dr
PROJECT #: BLW01a-F09_ W Jacob Dr
PROJECT MGR.: Nate Higgins
PROJECT MGR. #: 812.360.8597
***CBU = CITY OF BLOOMINGTON UTILITIES *COUNTY = MONROE COUNTY**
***IU= INDIANA UNIVERSITY *NP= NOT-FOR-PROFIT AGENCY**

G. EXCAVATIONS:

SQ FT OF PAVEMENT* EXCAVATIONS : N/A
*PAVEMENT INCLUDES: IN OR UNDER CONCRETE, OR ASPHALT INCLUDING CURBS
SQ FT OF NON-PAVEMENT* EXCAVATIONS: 97.70 Sq Ft
*DIRT, GRASS, GRAVEL, LANDSCAPE AREA OR OTHER UNPAVED SURFACE
LINEAL FT OF BORE*: 7,845 Lineal Ft
*BORE PITS SHALL BE CALCULATED AS SQ FT EXCAVATIONS
OF POLE INSTALLATIONS/REMOVAL: N/A
SQ FT OF SIDEWALK RECONSTRUCTION*: N/A
*CONCRETE OR ASPHALT SIDEWALK/PATH BEING IMPROVED/REPLACED
SQ FT OF SIDEWALK NEW CONSTRUCTION*: N/A
*CONCRETE OR ASPHALT SIDEWALK/PATH THAT IS NEW INFRASTRUCTURE
#RESIDENTIAL DRIVEWAY INSTALLATION: N/A

Indiana 811 Know what's below. Call before you dig.

TO SUBMIT A LOCATE REQUEST 24 HRS A DAY,
7 DAYS A WEEK
CALL 811 OR 800-382-5544
CALL 2 WORKING DAYS BEFORE YOU DIG.
ITS THE LAW.

H. INDEMNIFICATION AGREEMENT:

The petitioner/applicant hereby agrees to hold harmless, defend and to indemnify the City of Bloomington from or against all claims, action, damages and expenses, including but not limited to reasonable attorney's fees or any alleged injury and/or death to any person or damage to any property arising, or alleged to have arisen out of any act of commission or omission on the part of the petitioner/applicant, his/her heirs, successors, or assigns regardless of whether such acts are the direct or indirect result of the public right-of-way use pursuant to this permit grant.

I AFFIRM, UNDER THE PENALTIES FOR PERJURY, THAT THE FOREGOING REPRESENTATIONS ARE TRUE.

PRINT NAME: Bret Simons
SIGNATURE: Bret Simons
DATE: 7/24/2024

For Administration Use Only (applicable to CLOSURE approval)

Approved By: ☐ BPW ☐ City Engineer ☐ Director Date:

Staff Representative: Phone#: Date:

Board of Public Works

Staff Report

Project/Event: Walnut St. Garage Repairs Awarded Bid

Petitioner/Representative: PW Parking Services, Jess Goodman

Staff Representative: Jess Goodman

Date: 7/23/2024

Report:

CE Solutions Engineering Consultants has put together an assessment and bid invitation for the Walnut St. garage high priority repairs, and maintenance. We have received bids from Browning and Chapman, and Western Waterproofing.

WORK ITEM			Browning Chapman, LLC	Western Waterproofing Co., Inc.
BASE BID				
	1.	Silane Sealer	$1,000.00	$1,226.40
	2.	Epoxy Injection	$6,000.00	$5,946.00
	3.	Chemical Grout	$1,200.00	$2,574.00
	4.	Concrete Patching	$2,500.00	$12,197.50

	5.	Elastomeric Coating	$8,400.00	$4,368.00
	6.	Clean and Coating of Reinforcing Steel	$500.00	$1,078.00
	7.	Urethane Joint Replacement	$55,000.00	$25,002.35
	8.	Traffic Coating Replacement	$69,000.00	$48,640.00
	9.	Post Tensioning End Pocket Repair	$7,300.00	$13,113.00
	10.	Special Repairs (Details 1/S301, 2/S301, 3/S301)	$23,300.00	$16,220.80
	11.	Steel Flashing Replacement	*Included in Special Repairs*	$47,425.00
	12.	General Conditions Mobilization/Demobilization	$15,900.00	$48,640.00
BASE BID SUBTOTAL			**$190,100**	**$226,431**
ALTERNATES				
	1.	Alt. 1 Full Removal of Existing Traffic Coating	$49,000.00	$19,200.00
GRAND TOTAL			**$239,100.00**	**$245,631.05**

I recommend Browning and Chapman for this project.

Total cost of contract = $239,100 with Alt 1 Full Removal of Traffic Coating

Project Funding Source: 101-26-260000-54510 (CRED Fund)

Recommend ☒ **Approval** ☐ **Denial by:** Jess Goodman

Print Reset Form

City of Bloomington Contract and Purchase Justification Form

Vendor: Browning and Chapman LLC Contract Amount: $239,100.00

This form should be completed and attached to the contract documents and forwarded to the Legal Department Attorney assigned to your Department. Contracts will not be approved by the Controller if a completed form is not included with the contract documents.

PURCHASE INFORMATION

1. Check the box beside the procurement method used to initiate this procurement: (Attach a quote or bid tabulation if applicable)

- ☐ Request for Quote (RFQ)
- ☐ Request for Proposal (RFP)
- ☐ Sole Source
- ☐ Not Applicable (NA)
- ☑ Invitation to Bid (ITB)
- ☐ Request for Qualifications (RFQu)
- ☐ Emergency Purchase

2. List the results of procurement process. Give further explanation where requested.

# of Submittals:	Yes	No
Met city requirements?	☑	☐
Met item or need requirements?	☑	☐
Was an evaluation team used?	☑	☐
Was scoring grid used?	☐	☑
Were vendor presentations requested?	☐	☑

Was the lowest cost selected? (If no, please state below why it was not.)	Yes	No
	☑	☐

3. State why this vendor was selected to receive the award and contract:

Browning and Chapman LLC bid of 239,100 is lower than Western Waterproofing Co., Inc at 245,631.05. Both vendors went by the bid packet provided by CE Solutions Engineering Consultants, and attended the pre-bid meeting, on June 4th, 2024. I recommend Browning and Chapman to be awarded the contract.

Print/Type Name Print/Type Title Department

BLOOMINGTON

Jess Goodman <goodmanj@bloomington.in.gov>

Walnut St. Repairs Bid

Carrie Walden <clwalden@cesolutionsinc.com> Tue, Jul 23, 2024 at 3:28 PM
To: Jess Goodman <goodmanj@bloomington.in.gov>, "Mike M. Kelly" <mmkelly@cesolutionsinc.com>, Michelle Wahl <michelle.wahl@bloomington.in.gov>

Jess –

Great to hear! We agree Browning Chapman does good work, is a qualified contractor, is familiar with the City of Bloomington and specifically the Walnut Street Parking Garage. We agree they are the lowest responsive and responsible bidder and recommend the City of Bloomington move forward with project award. Please let us know if you need anything else from our office at this time.

Thanks!

Carrie

Carrie Walden, PE

Vice President

CE Solutions, Inc. // Structural Engineers

8770 North Street, Suite 100

Fishers, IN 46038

317.818.1912 main // 317.714.7700 cell

clwalden@cesolutionsinc.com // www.cesolutionsinc.com

[Quoted text hidden]

AGREEMENT

BETWEEN

CITY OF BLOOMINGTON

PUBLIC WORKS DEPARTMENT, PARKING SERVICES DIVISION

AND

BROWNING CHAPMAN LLC

FOR

WALNUT STREET GARAGE REPAIRS

THIS AGREEMENT, executed by and between the City of Bloomington, Indiana, Public Works Department, Parking Services Division, through the Board of Public Works (hereinafter CITY), and Browning Chapman, LLC, (hereinafter CONTRACTOR);

WITNESSETH THAT:

WHEREAS, CITY desires to retain CONTRACTOR'S services for the Walnut Street Garage Repair Project (more particularly described in Attachment A, "Scope of Work"); and

WHEREAS, CONTRACTOR is capable of performing work as per his/her Bid on the Bid Summary sheet; and

WHEREAS, in accordance with Indiana Code 5-16-13 *et seq*., incorporated herein by reference, Contractor is a Tier 1 or General Contractor for this project; and

WHEREAS, CONTRACTOR was determined to be the lowest responsible and responsive Bidder for said project.

NOW, THEREFORE, in consideration of the mutual promises hereinafter enumerated, the parties agree as follows:

ARTICLE 1. TERM

1.01 This Agreement shall be in effect upon execution of this Agreement by all parties. In accordance with Indiana Code 5-16-13 *et seq*., incorporated herein by reference, Contractor is a Tier 1 contractor or general contractor for this project.

ARTICLE 2. SERVICES

2.01 Contractor shall complete all Work as specified or indicated in the Contract Documents. The Work is generally described in Attachment A, "Scope of Work".

2.02 All work required under this Agreement shall be substantially completed by the CONTRACTOR by December 31, 2024, unless the parties mutually agree to a later completion date. Substantial Completion shall mean that all work is sufficiently completed in accordance with the plans and specifications, as modified by any approved change orders, so that it can be used for its intended purpose.

2.03 It is hereby understood by both parties that time is of the essence in this Agreement. Failure of CONTRACTOR to complete all work as herein provided will result in monetary damages to CITY. It is hereby agreed that CITY will be damaged for every day the work has not been performed in the manner herein provided and that the measure of those damages shall be determined by reference Section 13.00 of the General Conditions for Each Day of Overrun in Contract Time. CONTRACTOR agrees to pay CITY said damages or, in the alternative, CITY, at its sole discretion, may withhold monies otherwise due CONTRACTOR. It is expressly understood by the parties hereto that these damages relate to the time of performance and do not limit CITY's other remedies under this Agreement, or as provided by applicable law, for other damages.

2.04 CONTRACTOR agrees that no charges or claims for damages shall be made by him or her for any delays or hindrances, from any cause whatsoever during the progress of any portion of the services specified in the Agreement. Such delays or hindrances, if any, may be compensated for by an extension of time for a reasonable period as may be mutually agreed upon between the parties, it being understood, however, that permitting CONTRACTOR to proceed to complete any service, or any part of the services / project, after the date to which the time of completion may have been extended, shall in no way operate as a waiver on the part of CITY of any of its rights herein.

ARTICLE 3. COMPENSATION

3.01 CONTRACTOR shall provide services as specified in Attachment A, "Scope of Work", attached hereto and incorporated into this Agreement.

3.02 Owner shall pay Contractor for completion of the Work in accordance with the Contract Documents, subject to adjustment under the Contract, at the unit prices stated in Contractor's Bid, attached hereto as Attachment 'E'. CITY may withhold payment, in whole or in part, to the extent necessary to protect itself from a loss on account of any of the following:

Defective work.

Evidence indicating the probable filing of claims by other parties against CONTRACTOR which may adversely affect CITY.

Failure of CONTRACTOR to make payments due to subcontractors, material suppliers or employees.

Damage to CITY or a third party.

3.03 The submission of any request for payment shall be deemed a waiver and release by CONTRACTOR of all liens and claims with respect to the work and period to which such payment request pertains except as specifically reserved and noted on such request.

3.04 CONTRACTOR shall maintain proper account records for the scope of all services of this Agreement and provide an accounting for all charges and expenditures as may be necessary for audit purposes. All such records shall be subject to inspection and examination by CITY's representatives at reasonable business hours.

3.05 For projects utilizing federal funding the CONTRACTOR shall submit time sheets (WH-347) for his or her own and all subcontracted employees, to project manager or his or her representative for approval and review, including review for compliance with Davis Bacon requirements, if federal funds are used.

3.06 The project manager shall act as the CITY's representative and assume all duties and responsibilities and have all the rights and authority assigned in the Contract Documents in connection with completion of the Work in accordance with the Contract Documents.

ARTICLE 4. RETAINAGE

4.01 For contracts in excess of $100,000 and for which Contractor requested Progressive Payments on its Bid Form, the Owner requires that retainage be held as set out below.

4.02 **Retainage Amount** The retainage amount shall be five percent (5%) of the dollar value of all work satisfactorily completed and shall be withheld until the Contract work is complete. The retainage amount shall be placed in an escrow account with an escrow agent or shall be held by the Board of Public Works ("Board"). Yellow Cardinal Group Columbus, Indiana, shall serve as the escrow agent.

4.03 **Escrow Agent** If an escrow agent is used, the escrow agent, Owner and Contractor shall enter into a written escrow agreement and Contractor shall work directly with the escrow agent to set up the account. The escrow agent shall invest all escrowed principal in obligations selected by the escrow agent. The escrow agent shall be compensated for the agent's services by a reasonable fee, agreed upon by the parties, that is comparable with fees charged for the handling of escrow accounts of similar size and duration. The fee shall be paid from the escrow income. The escrow agent's fee may be determined by specifying an amount of interest the escrow agent will pay on the escrowed amount, with any additional earned interest serving as the escrow agent's fee. The escrow agreement may include other terms and conditions as deemed necessary by the parties. However, if Contractor intends to receive a Single Lump Sum payment upon acceptance of this project, retainage will not be required and an Escrow Agreement will not be required.

4.04 **Board** If the retainage is held by the Board, the Owner shall place the funds so retained in a retainage account with the Board. Such deposit shall be made within three business days after the date such payments are made to Contractor. No income will be earned or will be payable on the deposit.

4.05 **Payment of Escrow Amount** The escrow agent shall hold the escrowed principal and income until receipt of the notice from Owner and Contractor that the Contract work has been substantially completed to the reasonable satisfaction of Owner, at which time Owner shall pay to the Contractor the balance to be paid under this Contract and execute such documents as are necessary to authorize the escrow agent to pay to the Contractor the funds in the escrow account, including both specifying the part of the escrowed principal to be released from the escrow and the person to whom that portion is to be released. After receipt of the notice, the escrow agent shall remit the designated part of the escrowed principal and the escrowed income, minus the escrow agent's fees, to the person specified in the notice. However, nothing in this section shall prohibit Owner from requiring the escrow agent to withhold amounts necessary to complete minor items of the Contract, following substantial completion of the Contract in accordance with the provisions of paragraph 4.07.

4.06 **Payment of Retainage Amount by the Board** The Board shall hold the retainage until notice from the Owner that the Contract work has been substantially completed to the reasonable satisfaction of the Owner. At this time, the Owner shall pay to the Contractor the balance to be paid under this Contract and execute such documents as are necessary to authorize the Board to pay the Contractor the retainage. No interest will have been earned or will be payable. Nothing in this section shall prohibit Owner from requiring the Board to withhold amounts necessary to complete minor items of the Contract, following substantial completion of the Contract in accordance with the provisions of paragraph 4.07.

4.07 **Withholding Funds for Completion of Contract** If, upon substantial completion of the Contract, there still remains minor Contract work that needs to be completed, or minor Contract work that needs to be performed to the satisfaction of the Owner, the Owner may direct the escrow agent or the Board to retain and withhold from payment to the Contractor, an amount equal to two hundred percent (200%) of the value of said work. The value of said work shall be determined by the architect/engineer. The escrow agent or the Board shall release the funds withheld under this section after receipt of notice from the Owner that all work on the Contract has been satisfactorily completed. In the event that said work is not completed by the Contractor, but by the Owner or another party under contract with Owner, said funds shall be released to Owner.

ARTICLE 5. GENERAL PROVISIONS

5.01 CONTRACTOR agrees to indemnify and hold harmless CITY and its officers, agents, officials and employees for any and all claims, actions, causes of action, judgments and liens arising out of any negligent act or omission by CONTRACTOR or any of its officers, agents, officials, employees, or subcontractors or any defect in materials or workmanship of any supply, materials, mechanism or other product or service which it or any of its officers, agents, officials, employees, or subcontractors has supplied to CITY or has used in connection with this Agreement and regardless of whether or not it is caused in part by a party indemnified herein under. Such indemnity shall include attorney's fees and all costs and other expenses arising there from or incurred in connection therewith and shall not be limited by reason of the enumeration of any insurance coverage required herein.

CONTRACTOR shall indemnify and hold harmless CITY and its officers, agents, officials and employees for any and all damages, actions, costs, (including, but not limited to, attorney's fees, court costs and costs of investigation) judgments and claims by anyone for damage to property, injury or death to persons resulting from the collapse or failure of any trenches, ditches or other excavations constructed under or associated with this contract.

5.02 **Abandonment, Default and Termination**

5.02.01 CITY shall have the right to abandon the work contracted for in this Agreement without penalty. If CITY abandons the work described herein, CONTRACTOR shall deliver to CITY all surveys, notes, drawings, specifications and estimates completed or partially completed and these shall become the property of CITY. The earned value of the work performed shall be based upon an estimate of the proportion between the work performed by CONTRACTOR under this Agreement and the work which CONTRACTOR was obligated to perform under this Agreement. This proportion shall be mutually agreed upon by CITY and CONTRACTOR. The payment made to CONTRACTOR shall be paid as a final payment in full settlement of his or her services hereunder.

5.02.02 If CONTRACTOR defaults or fails to fulfill in a timely and proper manner the obligations pursuant to this Agreement, CITY may, after seven (7) days' written notice has been delivered to CONTRACTOR, and without prejudice to any other remedy it may have, make good such deficiencies and may deduct the cost thereof from the payment then or thereafter due to CONTRACTOR. In the alternative, CITY, at its option, may terminate this Agreement and take possession of the site and of all materials, equipment, tools and construction equipment and machinery thereon owned by CONTRACTOR, and may finish the project by whatever method it may deem expedient, and if the such action exceeds the unpaid balance of the sum amount, CONTRACTOR or his or her surety, shall pay the difference to CITY.

5.02.03 **Default**: If CONTRACTOR breaches this Agreement or fails to perform the work in an acceptable manner, he or she shall be considered in default. Any one or more of the following will be considered a default:

Failure to begin the work under this Agreement within the time specified.

Failure to perform the work with sufficient supervision, workmen, equipment and materials to insure prompt completion of said work within the time limits allowed.

Unsuitable performance of the work as determined by CITY ENGINEER or his or her representative.

Neglecting or refusing to remove defective materials or failure to perform anew such work as shall have been rejected.

Discontinuing the prosecution of the work or any part of it.

Inability to finance the work adequately.

If, for any other reason, CONTRACTOR breaches this Agreement or fails to carry on the work in an acceptable manner.

5.02.04 CITY shall send CONTRACTOR a written notice of default. If CONTRACTOR, or his or her Surety, within a period of ten (10) days after such notice, fails to remedy the default, then CITY shall have full power and authority, without violation of the Contract, to take the prosecution of the work out of the hands of said CONTRACTOR, to appropriate or use any or all materials and equipment on the ground as may be suitable and acceptable, and may, at its option, turn the work over to the Surety, or enter into an agreement with another Contractor for the completion of the Agreement according to the terms and provisions thereof, or CITY may use such other methods as, in its opinion, shall be required for the completion of said Contract in an acceptable manner.

5.02.05 All cost of completing the work under the Contract shall be deducted from the monies due or which may become due to said CONTRACTOR. In case the expenses so incurred by CITY shall be less than the sum which would have been payable under the Contract if it had been completed by said CONTRACTOR, CONTRACTOR shall be entitled to receive the difference. However, in case such expense shall exceed the sum which would have been payable under the Contract, CONTRACTOR and his or her Surety will be liable and shall pay to CITY the amount of said excess. By taking over the prosecution of the work, CITY does not forfeit the right to recover damages from CONTRACTOR or his or her Surety for his or her failure to complete the work in the time specified.

5.02.06 Notwithstanding any other provision of this Agreement, if funds for the continued fulfillment of the Agreement by CITY are at any time not forthcoming or are insufficient, through failure of any entity to appropriate the funds or otherwise, then CITY shall have the right to terminate this Agreement without penalty by giving prior written notice documenting the lack of funding in which instance, unless otherwise agreed to by the parties, this Agreement shall terminate and become null and void.

5.02.07 CITY agrees that it will make its best effort to obtain sufficient funds, including but not limited to, including in its budget for each fiscal period during the term hereof a request for sufficient funds to meet its obligations hereunder in full.

5.03 Successors and Assigns

5.03.01 Both parties agree that for the purpose of this Agreement, CONTRACTOR shall be an Independent Contractor and not an employee of CITY.

5.03.02 No portion of this Agreement shall be sublet, assigned, transferred or otherwise disposed of by CONTRACTOR except with the written consent of CITY being first obtained. Consent to sublet, assign, transfer, or otherwise dispose of any portion of this Agreement shall not be construed to relieve CONTRACTOR of any responsibility of the fulfillment of this Agreement.

5.04 Extent of Agreement: Integration

5.04.01 This Agreement consists of the following parts, each of which is as fully a part of this Agreement as if set out herein:

1. This Agreement and its Attachments.
2. All Written Amendments and other documents amending, modifying, or supplementing the Contract Documents which may be delivered or issued after the Effective Date of the Agreement and are not attached hereto.
3. All Addenda to the Bid Documents.
4. The Invitation to Bidders.
5. The Instructions to Bidders.
6. The Special Conditions.
7. All plans as provided for the work that is to be completed.
8. The Supplementary Conditions.
9. The General Conditions.
10. The Specifications.
11. The current Indiana Department of Transportation Standard Specifications and the latest addenda.
12. CONTRACTOR'S submittals.
13. The Performance Bond and the Payment Bond.
14. The Escrow Agreement.
15. Request for Taxpayer Identification number and certification: Substitute W-9.

5.04.02 In resolving conflicts, errors, discrepancies and disputes concerning the Scope of Work to be performed by CONTRACTOR, and other rights and obligations of CITY and CONTRACTOR, the document expressing the greater quantity, quality or other scope of work in question, or imposing the greater obligation upon CONTRACTOR and affording the greater right or remedy to CITY shall govern; otherwise the documents shall be given precedence in the order as enumerated above.

5.05 Insurance

5.05.01

CONTRACTOR shall, as a prerequisite to this Agreement, purchase and thereafter maintain such insurance as will protect him or her from the claims set forth below which may arise out of or result from CONTRACTOR'S operations under this Agreement,

whether such operations be by CONTRACTOR or by any SUBCONTRACTORS or by anyone directly or indirectly employed by any of them, or by anyone for whose acts any of them may be liable:

Coverage		Limits
A.	Worker's Compensation & Disability	Statutory Requirements
B.	Employer's Liability Bodily Injury by Accident	$100,000 each accident
	Bodily Injury by Disease	$500,000 policy limit
	Bodily Injury by Disease	$100,000 each employee
C.	Commercial General Liability (Occurrence Basis) Bodily Injury, personal injury, property damage, contractual liability, products-completed operations, General Aggregate Limit (other than Products/Completed Operations)	$1,000,000 per occurrence and $2,000,000 in the aggregate
	Products/Completed Operation	$1,000,000
	Personal & Advertising Injury Limit	$1,000,000
	Each Occurrence Limit	$1,000,000
	Fire Damage (any one fire)	$50,000
D.	Comprehensive Auto Liability (single limit, owned, hired and non-owned)	$1,000,000 each accident
	Bodily injury and property damage	
E.	Umbrella Excess Liability	$5,000,000 each occurrence and aggregate
	The Deductible on the Umbrella Liability shall not be more than	$10,000

5.05.02 CONTRACTOR'S comprehensive general liability insurance shall also provide coverage for the following:

Premises and operations;

Contractual liability insurance as applicable to any hold-harmless agreements;

Completed operations and products; which also must be maintained for a minimum period of two (2) years after final payment and CONTRACTOR shall continue to provide evidence of such coverage to CITY on an annual basis during the aforementioned period;

Broad form property damage - including completed operations;

Fellow employee claims under Personal Injury; and

Independent Contractors.

5.05.03 With the prior written approval of CITY, CONTRACTOR may substitute different types or amounts of coverage for those specified as long as the total amount of required protection is not reduced.

5.05.04 Certificates of Insurance showing such coverage then in force (but not less than the amount shown above) shall be on file with CITY prior to commencement of work. These Certificates shall contain a provision that coverage afforded under the policies will not be canceled or non-renewed until at least sixty (60) days' prior written notice has been received by CITY. The CITY shall be named as an additional insured on the Commercial General Liability, Automobile Liability, and Umbrella Excess Liability policies. The CONTRACTOR shall agree to a waiver of subrogation on its Worker's Compensation policy.

5.06 Necessary Documentation CONTRACTOR certifies that it will furnish CITY any and all documentation, certification, authorization, license, permit or registration required by the laws or rules and regulations of the City of Bloomington, the State of Indiana and the United States. CONTRACTOR further certifies that it is now and will maintain in good standing with such governmental agencies and that it will keep its license, permit registration, authorization or certification in force during the term of this Agreement.

5.07 Applicable Laws CONTRACTOR agrees to comply with all federal, state, and local laws, rules and regulations applicable to CONTRACTOR in performing work pursuant to this Agreement, including, but not limited to, discrimination in employment, prevailing wage laws, conflicts of interest, public notice, accounting records and requirements. CONTRACTOR shall comply with City of Bloomington Ordinance 2.21.020 and all other federal, state and local laws and regulations governing non-discrimination, including but not limited to employment. This Agreement shall be governed by the laws of the United States, and the State of Indiana, and by all Municipal Ordinances and Codes of the City of Bloomington. Venue of any disputes arising under this Agreement shall be in the Monroe Circuit Court, Monroe County, Indiana.

5.08 Non-Discrimination

5.08.01 CONTRACTOR and subcontractors shall not discriminate against any employee or applicant for employment, to be employed in the performance of this Agreement, with respect to hire, tenure, terms, training, conditions or privileges of employment, because of race, sex, color, religion, national origin, ancestry, disability, sexual orientation, gender identity, veteran status or housing status. Breach of this covenant may be regarded as a material breach of the Agreement.

5.08.02 CONTRACTOR certifies for itself and all its subcontractors compliance with existing laws of the City of Bloomington, the State of Indiana and the United States regarding:

Prohibition of discrimination in employment practices on the basis of race, sex, color, religion, national origin, ancestry, disability, sexual orientation, gender identity, veteran status, housing status, or any other legally protected classification;

The utilization of Minority and Women Business Enterprises. CONTRACTOR further certifies that it:

a. Has formulated its own Affirmative Action plan for the recruitment, training and employment of minorities and women, including goals and timetable; which has been approved by the City's Contract Compliance Officer.

b. Encourages the use of small business, minority-owned business and women-owned business in its operations.

CONTRACTOR understands that the City of Bloomington prohibits its employees from engaging in harassment or discrimination of any kind, including harassing or discriminating against independent contractors doing work for the City. If CONTRACTOR believes that a City employee engaged in such conduct towards CONTRACTOR and/or any of its employees, CONTRACTOR or its employees may file a complaint with the City department head in charge of the CONTRACTOR'S work and/or with the City human resources department or the Bloomington Human Rights Commission. The City takes all complaints of harassment and discrimination seriously and will take appropriate disciplinary action if it finds that any City employee engaged in such prohibited conduct.

5.08.03 FURTHER, PURSUANT TO INDIANA CODE 5-16-6-1, CONTRACTOR AGREES:

A) That in the hiring of employees for the performance of work under this Agreement or any sub agreement hereunder, no contractor, or subcontractor, nor any person acting on behalf of such CONTRACTOR or subcontractor, shall by reason of race, sex, color, religion, national origin, ancestry, or any other legally protected classification, discriminate against any citizen of the State of Indiana who is qualified and available to perform the work to which the employment relates.

B) That no contractor, subcontractor, or any person on their behalf, shall, in any manner, discriminate against or intimidate any employee hired for performance of work under this Agreement on account of race, religion, color, sex, national origin, ancestry, or any other legally protected classification.

C) That there may be deducted from the amount payable to CONTRACTOR, by CITY, under this Agreement, penalty of Five Dollars ($5.00) for each person for each calendar day during which such person was discriminated against or intimidated in violation of the provisions of this Agreement. Any such person discriminated against retains the right to file a discrimination complaint with the appropriate civil rights agency or court.

D) That this Agreement may be canceled or terminated by CITY and all money due or to become hereunder may be forfeited, for a second or any subsequent violations of the terms or conditions under this section of the Agreement.

5.09 Workmanship and Quality of Materials

5.09.01 CONTRACTOR shall guarantee the work for a period of one (1) year from the date of substantial completion. Failure of any portion of the work within one (1) year due to improper construction, materials of construction, or design may result in a refund to CITY of the purchase price of that portion which failed or may result in the forfeiture of CONTRACTOR's Performance Bond.

5.09.02 OR EQUAL: Wherever in any of the Agreement Documents an article, material or equipment is defined by describing a proprietary product, or by using the name of a manufacturer or vender, the term "Or Equal" or the term "The Equivalent" if not inserted, shall be implied, and it is done for the express purpose of establishing a basis of durability and efficiency and not for the purpose of limiting completion. Whenever material or equipment is submitted for approval as being equal to that specified, the submittal shall include sufficient information and data to demonstrate that the material or equipment conforms to the Contract requirements. The decision as to whether or not such material or equipment is equal to that specified shall be made by the ENGINEER. The approval by the ENGINEER of alternate material or equipment as being equivalent to that specified, shall not in any way relieve CONTRACTOR of responsibility for failure of the material or equipment due to faulty design, material, or workmanship, to perform the function required by the Contract Documents. Specifications as determined by other entities within the City of Bloomington such as City Utilities shall only be substituted or changed by their approval which shall be submitted in writing to the ENGINEER.

5.09.03 CITY shall be the sole judge of the sufficiency of workmanship and quality of materials. Disputes shall be resolved by the City Engineer and are not subject to arbitration.

5.10 Safety. CONTRACTOR shall be responsible for the safety of employees at all times and shall provide all equipment necessary to insure their safety. CONTRACTOR shall ensure the enforcement of all applicable safety rules, regulations, ordinances and laws, whether federal, state or local. Contractor's Superintendent of Safety shall make daily inspections upon the arrival and leaving of the site at the close of each workday.

5.10.01 CONTRACTOR is required to comply with IOSHA regulations 29 C.F.R 1926, Subpart P, Excavations for all trenches of at least five (5) feet in depth. All cost for trench safety systems shall be the responsibility of the CONTRACTOR and included in the cost of the principal work with which the safety systems are associated. CONTRACTOR shall sign an affidavit, attached as Attachment B, affirming that CONTRACTOR shall maintain compliance with IOSHA requirements for excavations of at least five (5) in depth.

5.11 Amendments/Changes

5.11.01 Except as provided in Paragraph 5.11.02, this Agreement may be amended only by written instrument signed by both CITY and CONTRACTOR.

5.11.02 Without invalidating the Agreement and without notice to any surety, CITY may, at any time or from time to time, order, in writing, additions, deletions, or revisions in the work. Upon receipt of any such document, CONTRACTOR shall promptly proceed with the work involved, which will be performed under the applicable conditions of the Agreement Documents.

5.11.03 If CONTRACTOR believes that any direction of CITY under paragraph 5.11.02, or any other event or condition, will result in an increase in the Contract time or price, he or she shall file written notice with CITY no later than twenty (20) calendar days after the occurrence of the event giving rise to the claim and stating the general nature of the claim with supporting data. No claim for any adjustment of the Contract time or price will be valid if not submitted in accordance with this Paragraph.

5.11.04 CONTRACTOR shall carry on the work and adhere to the progress schedule during all disputes or disagreements with CITY. No work shall be delayed or postponed pending resolution of any dispute or disagreement except as CONTRACTOR and CITY may otherwise agree in writing.

5.12 Performance Bond and Payment Bond

5.12.01 For contracts in excess of $100,000, CONTRACTOR shall provide CITY with a Performance Bond and a Payment Bond in the amount of one hundred percent (100%) of the contract amount.

5.12.02 Failure by CONTRACTOR to perform the work in a timely or satisfactory fashion may result in forfeiture of CONTRACTOR'S Performance Bond.

5.12.03 If the surety on any bond furnished by CONTRACTOR becomes a party to supervision, liquidation, or rehabilitation action pursuant Indiana Code 27-9 et seq. or its right to do business in the State of Indiana is terminated, CONTRACTOR shall, within thirty (30) calendar days thereafter, substitute another bond and surety, both of which must be acceptable to CITY.

5.13 Payment of Subcontractors CONTRACTOR shall pay all subcontractors, laborers, material suppliers and those performing services to CONTRACTOR on the project under this Agreement. CITY may, as a condition precedent to any payment hereunder, require CONTRACTOR to submit satisfactory evidence of payments of any and all claims of subcontractors, laborers, material suppliers, and those furnishing services to CONTRACTOR. Upon receipt of a lawful claim, CITY shall withhold money due to CONTRACTOR in a sufficient amount to pay the subcontractors, laborers, material suppliers, and those furnishing services to CONTRACTOR.

5.13.01 The surety of the Payment Bond and Performance Bond may not be released until one (1) year after the Board's final settlement with the CONTRACTOR.

5.14 **Written Notice** Written notice shall be considered as served when delivered in person or sent by mail to the individual, firm, or corporation, or to the last business address of such known to CONTRACTOR who serves the Notice. Notice shall be sent as follows:

TO CITY: TO CONTRACTOR:

City of Bloomington		Browning and Chapman, LLC
Attn: Jess Goodman		2101 Bastian Court
401 N Morton St Suite 120		Westfield, IN 46074
Bloomington, Indiana 47404		

5.15 **Severability and Waiver** In the event that any clause or provision of this Agreement is held to be invalid by any court of competent jurisdiction, the invalidity of such clause or provision shall not affect any other provision of this Agreement. Failure of either party to insist on strict compliance with any provision of this Agreement shall not constitute waiver of that party's right to demand later compliance with the same or other provisions of this Agreement.

5.16 **Notice to Proceed** CONTRACTOR shall not begin the work pursuant to the "Scope of Work" of this Agreement until it receives an official written Notice to Proceed from the City. Contractor shall start active and continuous work on the Agreement within fifteen (15) calendar days after the date of the Notice to Proceed. In no case shall work begin prior to the date of the Notice to Proceed. If a delayed starting date is indicated in the proposal, the fifteen (15) calendar day limitation will be waived. Work day charges will then begin on a date mutually agreed upon, but not later than the delayed starting date specified. In the event that any Agreement is canceled after an award has been made but prior to the issuing of the Notice to Proceed, no reimbursement will be made for any expenses accrued relative to this contract during that period.

5.17 **Steel or Foundry Products**

5.17.01 To comply with Indiana Code 5-16-8, affecting all contracts for the construction, reconstruction, alteration, repair, improvement or maintenance of public works, the following provision shall be added: If steel or foundry products are to be utilized or supplied in the performance of any contract or subcontract, only domestic steel or foundry products shall be used. Should CITY feel that the cost of domestic steel or foundry products is unreasonable; CITY will notify CONTRACTOR in writing of this fact.

5.17.02 Domestic Steel products are defined as follows:

> "Products rolled, formed, shaped, drawn, extruded, forged, cast, fabricated or otherwise similarly processed, or processed by a combination of two (2) or more of such operations, from steel made in the United States by open hearth, basic oxygen, electric furnace, Bessemer or other steel making process."

5.17.03 Domestic Foundry products are defined as follows:

> "Products cast from ferrous and nonferrous metals by foundries in the United States."

5.17.04 The United States is defined to include all territory subject to the jurisdiction of the United States.

5.17.05 CITY may not authorize or make any payment to CONTRACTOR unless CITY is satisfied that CONTRACTOR has fully complied with this provision.

5.18 **Verification of Employees' Immigration Status**

Contractor is required to enroll in and verify the work eligibility status of all newly-hired employees through the E-Verify program. (This is not required if the E-Verify program no longer exists). Contractor shall sign an affidavit, attached as Attachment C, affirming that Contractor does not knowingly employ an unauthorized alien. "Unauthorized alien" is defined at 8 U.S. Code 1324a(h)(3) as a person who is not a U.S. citizen or U.S. national and is not lawfully admitted for permanent residence or authorized to work in the U.S. under 8 U.S. Code Chapter 12 or by the U.S. Attorney General.

Contractor and any of its subcontractors may not knowingly employ or contract with an unauthorized alien, or retain an employee or contract with a person that the Contractor or any of its subcontractors learns is an unauthorized alien. If the City obtains information that the Contractor or any of its subcontractors employs or retains an employee who is an unauthorized alien, the City shall notify the Contractor or its subcontractors of the Agreement violation and require that the violation be remedied within thirty (30) calendar days of the date of notice. If the Contractor or any of its subcontractors verify the work eligibility status of the employee in question through the E-Verify program, there is a rebuttable presumption that the Contractor or its subcontractor did not knowingly employ an unauthorized alien. If the Contractor or its subcontractor fails to remedy the violation within the thirty (30) calendar day period, the City shall terminate the Agreement, unless the City determines that terminating the Agreement would be detrimental to the public interest or public property, in which case the City may allow the

Agreement to remain in effect until the City procures a new contractor. If the City terminates the Agreement, the Contractor or its subcontractor is liable to the City for actual damages.

Contractor shall require any subcontractors performing work under this Agreement to certify to the Contractor that, at the time of certification, the subcontractor does not knowingly employ or contract with an unauthorized alien and the subcontractor has enrolled in and is participating in the E-Verify program. Contractor shall maintain on file all subcontractors' certifications throughout the term of this Agreement with the City.

5.19 Drug Testing Plan

In accordance with Indiana Code 4-13-18 as amended, the CONTRACTOR was required to submit with his/her bid a written drug testing policy for a public works project that is estimated to cost $150,000 or more. Among other things, the law sets forth specific requirements that must be in the plan for a program to test the employees of the CONTRACTOR and Subcontractors for drugs. The successful CONTRACTOR must comply with all provisions of the statute. This contract is subject to cancellation if CONTRACTOR fails to implement its testing program during the term of this contract, fails to provide information regarding this testing at the request of CITY; or provides false information to CITY regarding CONTRACTOR's employee drug testing program. CONTRACTOR shall sign an affidavit, attached as Attachment D, affirming that CONTRACTOR has and shall implement CONTRACTOR'S employee drug testing program throughout the term of this project.

IN WITNESS WHEREOF, the parties of this Agreement have hereunto set their hands.

DATE: _____

City of Bloomington

BY:

Kyla Cox Deckard, President

Elizabeth Karon, Vice President

James Roach, Secretary

Kerry Thompson, Mayor of Bloomington

BY:

Contractor Representative

Printed Name

Title of Contractor Representative

ATTACHMENT 'A'

"**SCOPE OF WORK**"

Walnut Street Garage Repairs Project

This project shall include, but is not limited to, applying Silane Sealer, epoxy injections, chemical grout, concrete patching, elastomeric coating, coating reinforcement steel, urethane joint replacement, removal of old traffic coating, post tension repair, steel flashing replacement, traffic coating, and demolition.

ATTACHMENT 'B'

BIDDER'S AFFIDAVIT IN COMPLIANCE WITH INDIANA CODE 36-1-12-20 TRENCH SAFETY SYSTEMS; COST RECOVERY

STATE OF INDIANA)
) SS:
COUNTY OF _____)

AFFIDAVIT

The undersigned, being duly sworn, hereby affirms and says that:

1. The undersigned is the _____ of
(job title)
_____.
(company name)

2. The undersigned is duly authorized and has full authority to execute this Bidder's Affidavit.

3. The company named herein that employs the undersigned:
   i. has contracted with or seeking to contract with the City of Bloomington to provide services; **OR**
   ii. is a subcontractor on a contract to provide services to the City of Bloomington.

4. By submission of this Bid and subsequent execution of a Contract, the undersigned Bidder certifies that as successful Bidder (Contractor) all trench excavation done within his/her control (by his/her own forces or by his/her Subcontractors) shall be accomplished in strict adherence with OSHA trench safety standards contained in 29 C.F.R. 1926, Subpart P, including all subsequent revisions or updates to these standards as adopted by the United States Department of Labor.

5. The undersigned Bidder certifies that as successful Bidder (Contractor) he/she has obtained or will obtain identical certification from any proposed Subcontractors that will perform trench excavation prior to award of the subcontracts and that he/she will retain such certifications in a file for a period of not less than three (3) years following final acceptance.

6. The Bidder acknowledges that included in the various items listed in the Schedule of Bid Prices and in the Total Amount of Bid Prices are costs for complying with I.C. 36-1-12-20. The Bidder further identifies the costs to be summarized below*:

	Trench Safety Measure	Units of Measure	Unit Cost	Unit Quantity	Extended Cost
A.					
B.					
C.					
D.					
				Total	**$_____**

Method of Compliance (Specify) _____

_____

Date: _____, 20_____

_____
Signature

_____
Printed Name

STATE OF INDIANA)
) SS:
COUNTY OF _____)

Before me, a Notary Public in and for said County and State, personally appeared _____ and acknowledged the execution of the foregoing this _____ day of _____, 20_____.

My Commission Expires: _____ _____
Signature of Notary Public

County of Residence: _____ _____
Printed Name of Notary Public

Commission #:_____

*Bidders: Add extra sheet(s), if needed.

If Bidder fails to complete and execute this sworn affidavit, his/her Bid may be declared nonresponsive and rejected by the **CITY OF BLOOMINGTON**.

ATTACHMENT 'C'

"E-Verify AFFIDAVIT"

STATE OF INDIANA)

)SS:

COUNTY OF _____)

E-Verify AFFIDAVIT

The undersigned, being duly sworn, hereby affirms and says that:

1. The undersigned is the _____ of _____.
   a. (job title) (company name)
2. The company named herein that employs the undersigned:
   i. has contracted with or seeking to contract with the City of Bloomington to provide services; **OR**
   ii. is a subcontractor on a contract to provide services to the City of Bloomington.
3. The undersigned hereby states that, to the best of his/her knowledge and belief, the company named herein does not knowingly employ an "unauthorized alien," as defined at 8 United States Code 1324a(h)(3).
4. The undersigned herby states that, to the best of his/her belief, the company named herein is enrolled in and participates in the E-verify program.

_____

Signature

_____

Printed Name

STATE OF INDIANA)

)SS:

COUNTY OF _____)

Before me, a Notary Public in and for said County and State, personally appeared _____ and acknowledged the execution of the foregoing this _____ day of _____, 20_____.

My Commission Expires: _____ _____

Signature of Notary Public

County of Residence: _____ _____

Printed Name of Notary Public

My Commission #:_____

ATTACHMENT 'D'

COMPLIANCE AFFIDAVIT

REGARDING INDIANA CODE CHAPTER 4-13-18

DRUG TESTING OF EMPLOYEES OF PUBLIC WORKS CONTRACTORS

STATE OF INDIANA)
) SS:
COUNTY OF _____)

AFFIDAVIT

The undersigned, being duly sworn, hereby affirms and says that:

1. The undersigned is the _____ of
(job title)
_____.
(company name)

2. The undersigned is duly authorized and has full authority to execute this Affidavit.

3. The company named herein that employs the undersigned:
   iii. has contracted with or seeking to contract with the City of Bloomington to provide services; **OR**
   iv. is a subcontractor on a contract to provide services to the City of Bloomington.

4. The undersigned certifies that Contractor's submitted written plan for a drug testing program to test employees of the Contractor and Subcontractor for public works projects with an estimated cost of $150,000 is in accordance with Indiana Code 4-13-18 as amended.

5. The undersigned acknowledges that this Contract shall be subject to cancellation should Contractor fail to comply all provisions of the statute.

_____
Signature

_____
Printed Name

STATE OF INDIANA)
)SS:
COUNTY OF _____)

Before me, a Notary Public in and for said County and State, personally appeared _____ and acknowledged the execution of the foregoing this _____ day of _____, 20_____.

My Commission Expires: _____

_____
Signature of Notary Public

County of Residence: _____

_____
Printed Name of Notary Public

My Commission #:_____

ATTACHMENT 'E'

"Unit Prices"

WORK ITEM			Browning Chapman, LLC
BASE BID			
	1.	Silane Sealer	$1,000.00
	2.	Epoxy Injection	$6,000.00
	3.	Chemical Grout	$1,200.00
	4.	Concrete Patching	$2,500.00
	5.	Elastomeric Coating	$8,400.00
	6.	Clean and Coating of Reinforcing Steel	$500.00
	7.	Urethane Joint Replacement	$55,000.00
	8.	Traffic Coating Replacement	$69,000.00
	9.	Post Tensioning End Pocket Repair	$7,300.00
	10.	Special Repairs (Details 1/S301, 2/S301, 3/S301)	$23,300.00
	11.	Steel Flashing Replacement	*Included in Special Repairs*
	12.	General Conditions Mobilization/Demobilization	$15,900.00
BASE BID SUBTOTAL			**$190,100**
ALTERNATES			
	1.	Alt. 1 Full Removal of Existing Traffic Coating	$49,000.00
GRAND TOTAL			**$239,100.00**

Board of Public Works Claim Register

Invoice Date Range 07/20/24 - 08/02/24

Vendor	Invoice Description	Contract #	Payment Date	Invoice Amount
Fund **101 - General Fund (S0101)**				
Department **01 - Animal Shelter**				
Program **010000 - Main**				
Account **43430 - Animal Adoption Fees**				
Logan Robbins	01-refund adoption fee-canine-7/9/24		08/02/2024	100.00
Michael Trueblood	01-refund adoption fee-kitten-7/18/24		08/02/2024	90.00
	Account **43430 - Animal Adoption Fees** Totals	Invoice Transactions 2		$190.00
Account **43442 - Equipment Deposits**				
Amanda Bainter	01-refund trap deposit-7/21/24		08/02/2024	40.00
Sofia Fitzgerald	01-refund trap deposit-7/15/24		08/02/2024	40.00
	Account **43442 - Equipment Deposits** Totals	Invoice Transactions 2		$80.00
Account **52210 - Institutional Supplies**				
4586 - Hill's Pet Nutrition Sales, INC	01-Dog, puppy, kitten & cat food	BC 2024-026	08/02/2024	158.24
4586 - Hill's Pet Nutrition Sales, INC	01-Dog & Kitten food	BC 2024-026	08/02/2024	171.04
4586 - Hill's Pet Nutrition Sales, INC	01-Prescription Veterinary Food	BC 2024-026	08/02/2024	289.46
4574 - John Deere Financial f.s.b. (Rural King)	01-litter-50 40lb bags pellet bedding		08/02/2024	249.50
4549 - Kroger Limited Partnership I	01-Food for skunk-sardines, collard greens, spinach		08/02/2024	10.24
4633 - Midwest Veterinary Supply, INC	01-Buspirone		08/02/2024	8.95
4633 - Midwest Veterinary Supply, INC	01-Flavoring for med compounding		08/02/2024	20.71

4633 - Midwest Veterinary Supply, INC	01-Thyroid medications	08/02/2024	22.58
4633 - Midwest Veterinary Supply, INC	01-vinyl exam gloves (L), bottles	08/02/2024	64.54
4633 - Midwest Veterinary Supply, INC	01-Antiparasitic and antibiotic	08/02/2024	134.62
4633 - Midwest Veterinary Supply, INC	01-vinyl exam gloves (L & XL) & fluids	08/02/2024	162.36
4633 - Midwest Veterinary Supply, INC	01-Supportive therapy & syringes	08/02/2024	189.28
4633 - Midwest Veterinary Supply, INC	01-Antibiotics, syringes, bottles	08/02/2024	300.83
4633 - Midwest Veterinary Supply, INC	01-Dermatophyte plates, steroids, anxiety/tress treatments	08/02/2024	316.12
4633 - Midwest Veterinary Supply, INC	01-Sanitizer, gloves, ISO gowns, syringes, sharps	08/02/2024	1,987.81
4707 - Vortech Pharmaceuticals	01-Fatal Plus solution	08/02/2024	554.53
4666 - Zoetis, INC	01-FELV/FIV test kits	08/02/2024	691.10
	Account **52210 - Institutional Supplies** Totals	Invoice Transactions 17	$5,331.91

Account **52310 - Building Materials and Supplies**

8541 - Amazon.com Sales, INC (Amazon.com Services LLC)	01 - vacuum breaker	08/02/2024	31.99
	Account **52310 - Building Materials and Supplies** Totals	Invoice Transactions 1	$31.99

Account **52340 - Other Repairs and Maintenance**

409 - Black Lumber Co. INC	01-drill bit for bench installation	08/02/2024	6.99
409 - Black Lumber Co. INC	01-Hardware for bench installation	08/02/2024	9.80
313 - Fastenal Company	01-Trash liners	08/02/2024	60.00
313 - Fastenal Company	01-Towels	08/02/2024	149.40
577 - W.W. Grainger, INC	01-Lift Table for large deceased animals	08/02/2024	813.97

Board of Public Works Claim Register

Invoice Date Range 07/20/24 - 08/02/24

	Account **52340 - Other Repairs and Maintenance** Totals	Invoice Transactions	5	$1,040.16
Account **52420 - Other Supplies**				
577 - W.W. Grainger, INC	01-3 portable 2-way radios for shelter communication		08/02/2024	475.14
	Account **52420 - Other Supplies** Totals	Invoice Transactions	1	$475.14
Account **53130 - Medical**				
175 - Monroe County Humane Association, INC	01-Spay/Neuter Surgeries-7/16/24		08/02/2024	1,161.00
9004 - Public Vet Services INC	01-Spay/Neuter Surgeries-33 cat & 3 dog		08/02/2024	3,420.00
	Account **53130 - Medical** Totals	Invoice Transactions	2	$4,581.00
Account **53210 - Telephone**				
13969 - AT&T Mobility II, LLC	06-cell phone chgs 06/12-07/11/24-Inv. 287289748780X07192024		07/24/2024	250.24
13969 - AT&T Mobility II, LLC	06-cell phone chgs 06/12-07/11/24-Inv. 287297421132X07192024		07/24/2024	41.02
	Account **53210 - Telephone** Totals	Invoice Transactions	2	$291.26
Account **53510 - Electrical Services**				
223 - Duke Energy	19-Fac Summary Elec Billing-06/04/24-07/01/2024			23.87
	Account **53510 - Electrical Services** Totals	Invoice Transactions	1	$23.87
Account **53990 - Other Services and Charges**				
293 - J&S Locksmith Shop, INC	01-Door Lock Repair -6/28/24		08/02/2024	125.00
	Account **53990 - Other Services and Charges** Totals	Invoice Transactions	1	$125.00
	Program **010000 - Main** Totals	Invoice Transactions	34	$12,170.33
	Department **01 - Animal Shelter** Totals	Invoice Transactions	34	$12,170.33

Board of Public Works Claim Register

Invoice Date Range 07/20/24 - 08/02/24

Department **02 - Public Works**

Program **020000 - Main**

Account **46060 - Other Violations**

Robert A Booze	26-Customer paid ticket before it was voided		08/02/2024	30.00
Caracciola Morales	26-Customer paid ticket before it was voided		08/02/2024	30.00
James A Newman	26-Customer paid ticket before it was voided		08/02/2024	30.00
Myah Sitton	26-Ticket had wrong plate number, customer paid Parkmobile		08/02/2024	30.00
	Account **46060 - Other Violations** Totals	Invoice Transactions	4	$120.00

Account **52330 - Street , Alley, and Sewer Material**

5149 - E&B Paving, INC	20-Asphalt for Paving Eagleson & E. 5th 06/06/24	BC 2023-093A	08/02/2024	37,240.46
5149 - E&B Paving, INC	20-Asphalt for Paving Union St 06/12/24	BC 2023-093A	08/02/2024	20,849.99
5149 - E&B Paving, INC	20-Asphalt for Paving Union St & E 5th St 06/13/24	BC 2023-093A	08/02/2024	19,123.30
5149 - E&B Paving, INC	20-Asphalt for Paving Fess Ave & Woodlawn Ave 07/01/24	BC 2023-093A	08/02/2024	10,870.06
	Account **52330 - Street , Alley, and Sewer Material** Totals	Invoice Transactions	4	$88,083.81

Account **53170 - Mgt. Fee, Consultants, and Workshops**

9369 - Williams Tree Company LLC	02-Emergency Storm Debris City Wide Clean-Up		08/02/2024	97,945.00
	Account **53170 - Mgt. Fee, Consultants, and Workshops** Totals	Invoice Transactions	1	$97,945.00

Account **53210 - Telephone**

13969 - AT&T Mobility II, LLC	06-cell phone chgs 06/12-07/11/24-Inv. 287289748780X07192024		07/24/2024	130.31
	Account **53210 - Telephone** Totals	Invoice Transactions	1	$130.31

Account **53230 - Travel**

2659 - Wason, Adam	02-Travel Washington D.C-Congressional & Fed DOT Reps w/Mayor		08/02/2024	219.00
	Account **53230 - Travel** Totals	Invoice Transactions	1	$219.00

Account **54510 - Other Capital Outlays**

5976 - EV Connect, INC	19 - 2 Network cloud Subscriptions, Remote charge station,		08/02/2024	7,067.00
5976 - EV Connect, INC	19-install 2 @ Electric Vehicle Charging Stations (City Hall)		08/02/2024	10,572.90
	Account **54510 - Other Capital Outlays** Totals	Invoice Transactions	2	$17,639.90
	Program **020000 - Main** Totals	Invoice Transactions	13	$204,138.02
	Department **02 - Public Works** Totals	Invoice Transactions	13	$204,138.02

Department **03 - City Clerk**

Program **030000 - Main**

Account **53210 - Telephone**

13969 - AT&T Mobility II, LLC	06-cell phone chgs 06/12-07/11/24-Inv. 287297421132X07192024		07/24/2024	164.08
	Account **53210 - Telephone** Totals	Invoice Transactions	1	$164.08
	Program **030000 - Main** Totals	Invoice Transactions	1	$164.08
	Department **03 - City Clerk** Totals	Invoice Transactions	1	$164.08

Department **04 - Economic & Sustainable Dev**

Program **040000 - Main**

Account **53170 - Mgt. Fee, Consultants, and Workshops**

8737 - ADS Consulting INC (Stone Municipal Group)	04-Finacial Consulting-PH II Abatement Review June 2024		08/02/2024	1,770.00

Board of Public Works Claim Register

Invoice Date Range 07/20/24 - 08/02/24

8737 - ADS Consulting INC (Stone Municipal Group)	04-:Enterprise Zone Invest Deduction (EZID) Proj Review-June 24'	08/02/2024	752.50
8737 - ADS Consulting INC (Stone Municipal Group)	04-Finacial Consulting-PH II Abatement Review May 2024	08/02/2024	3,540.00
7784 - Stefan Reiss	04-Per Diem with Stefan Reiss for Trades Plaza Sculpture Design	08/02/2024	476.91
Account **53170 - Mgt. Fee, Consultants, and Workshops** Totals		Invoice Transactions 4	$6,539.41

Account **53210 - Telephone**

13969 - AT&T Mobility II, LLC	06-cell phone chgs 06/12-07/11/24-Inv. 287297421132X07192024	07/24/2024	82.04
Account **53210 - Telephone** Totals		Invoice Transactions 1	$82.04

Account **53230 - Travel**

8368 - Holly Warren	04-Travel Reimb-S. Reiss-Artist-6/19-6/21/2024	08/02/2024	108.00
Account **53230 - Travel** Totals		Invoice Transactions 1	$108.00

Account **53320 - Advertising**

7815 - A&M Graphics (Baugh Fine Print and Mailing)	04-June 2024 Water Bill Inserts-Community Heat Survey (20,500)	08/02/2024	1,417.28
Account **53320 - Advertising** Totals		Invoice Transactions 1	$1,417.28

Account **53910 - Dues and Subscriptions**

517 - Indiana Economic Development Association, INC	04-Prorated Membership Application Dues - Jane Kupersmith	08/02/2024	147.50
Account **53910 - Dues and Subscriptions** Totals		Invoice Transactions 1	$147.50

Account **53940 - Temporary Contractual Employee**

203 - INDIANA UNIVERSITY	04-Intern payroll - Burns, Roth, Tarricone (Aug2023-May2024)	08/02/2024	5,621.09
Account **53940 - Temporary Contractual Employee** Totals		Invoice Transactions 1	$5,621.09

Account **53960 - Grants**

746 - Early Music Associates, INC	04-BAC Arts Project Grant - Early Music Assoc	08/02/2024		2,000.00
1102 - Mother Hubbard's Cupboard	04-Garden Hub Grant 2024	08/02/2024		10,000.00
1284 - Southern Indiana Youth Symphony INC	04-BAC Arts Project Grant-MAYO-Bridges Musical Arts Youth Org	08/02/2024		1,000.00
3946 - Writers Guild at Bloomington, INC	04-BAC Arts Project Grant - Writers Guild	08/02/2024		1,500.00
	Account **53960 - Grants** Totals	Invoice Transactions	4	$14,500.00
Account **53970 - Mayor's Promotion of Business**				
9380 - Back Door Bloomington LLC (The Back Door)	04-Performance for PRISMA art celebration	08/02/2024		400.00
	Account **53970 - Mayor's Promotion of Business** Totals	Invoice Transactions	1	$400.00
Account **53990 - Other Services and Charges**				
9365 - Traduality Language Solutions, INC	04-Translation Services for Extreme Heat Social Media Posts	08/02/2024		305.60
	Account **53990 - Other Services and Charges** Totals	Invoice Transactions	1	$305.60
	Program **040000 - Main** Totals	Invoice Transactions	15	$29,120.92
Program **04TECH - Trades Tech Center**				
Account **53990 - Other Services and Charges**				
3909 - Applied Engineering Services, INC	04-Trades District Tech Center through 06/21/24	08/02/2024		8,400.00
9150 - Multicraft Fire LLC	04-Trades District Tech Ctr-Fire Protection-Pay App 4	08/02/2024		49,922.50
595 - Weddle Bros Construction Co., INC	04-Trades District Tech Ctr Management - Pay App #12	08/02/2024		42,931.13
	Account **53990 - Other Services and Charges** Totals	Invoice Transactions	3	$101,253.63
	Program **04TECH - Trades Tech Center** Totals	Invoice Transactions	3	$101,253.63
	Department **04 - Economic & Sustainable Dev** Totals	Invoice Transactions	18	$130,374.55

Board of Public Works Claim Register

Invoice Date Range 07/20/24 - 08/02/24

Department **05 - Common Council**

Program **050000 - Main**

Account **53210 - Telephone**

13969 - AT&T Mobility II, LLC	06-cell phone chgs 06/12-07/11/24-Inv. 287297421132X07192024		07/24/2024	41.02
	Account **53210 - Telephone** Totals	Invoice Transactions	1	$41.02
	Program **050000 - Main** Totals	Invoice Transactions	1	$41.02
	Department **05 - Common Council** Totals	Invoice Transactions	1	$41.02

Department **06 - Controller's Office**

Program **060000 - Main**

Account **53170 - Mgt. Fee, Consultants, and Workshops**

330 - Ice Miller, LLP	06-Legal service for Lobbying, Federal Funding, Econ Dev-6.30.24		08/02/2024	10,000.00
	Account **53170 - Mgt. Fee, Consultants, and Workshops** Totals	Invoice Transactions	1	$10,000.00

Account **53230 - Travel**

8248 - Cheryl Gilliland	06-Travel reimb-2024 GFOA Conf. 6/8-6/12 Orlando		08/02/2024	876.77
8248 - Cheryl Gilliland	06-Travel reimb-SBOA Conf South Bend-6/24-6/27		08/02/2024	124.50
9159 - Jessica McClellan	06-Travel reimb-SBOA Conf-South Bend-6/24-6/27		08/02/2024	124.50
9159 - Jessica McClellan	06-Travel reimb-2024 GFOA Conf. 6/8-6/12 Orlando		08/02/2024	1,581.81
9159 - Jessica McClellan	06-Reimb Pkg-Tyler Connect Conf.-Indy-5/20-5/22		08/02/2024	63.30
	Account **53230 - Travel** Totals	Invoice Transactions	5	$2,770.88
	Program **060000 - Main** Totals	Invoice Transactions	6	$12,770.88

Board of Public Works Claim Register

Invoice Date Range 07/20/24 - 08/02/24

	Department **06 - Controller's Office** Totals	Invoice Transactions	6	$12,770.88
Department **07 - Engineering**				
Program **070000 - Main**				
Account **52110 - Office Supplies**				
8541 - Amazon.com Sales, INC (Amazon.com Services LLC)	07-Otterbox, IPhone Charger- D. Tahir		08/02/2024	52.93
8541 - Amazon.com Sales, INC (Amazon.com Services LLC)	07-Wireless Headphones D. Schonemann-Poppeliers		08/02/2024	163.49
6530 - Office Depot, INC	07-Folders for the office		08/02/2024	18.59
	Account **52110 - Office Supplies** Totals	Invoice Transactions	3	$235.01
Account **53210 - Telephone**				
13969 - AT&T Mobility II, LLC	06-cell phone chgs 06/12-07/11/24-Inv. 287297421132X07192024		07/24/2024	933.47
	Account **53210 - Telephone** Totals	Invoice Transactions	1	$933.47
Account **54310 - Improvements Other Than Building**				
5409 - VS Engineering, INC	07-Crosswalk Ph2 (PE)-period ending 04/30/24		08/02/2024	1,040.00
	Account **54310 - Improvements Other Than Building** Totals	Invoice Transactions	1	$1,040.00
	Program **070000 - Main** Totals	Invoice Transactions	5	$2,208.48
	Department **07 - Engineering** Totals	Invoice Transactions	5	$2,208.48
Department **09 - CFRD**				
Program **090000 - Main**				
Account **52420 - Other Supplies**				
11693 - The Award Center, INC	09-Living Legend and Oustanding Black Leader Backdated Nameplat		08/02/2024	328.00

Board of Public Works Claim Register

Invoice Date Range 07/20/24 - 08/02/24

	Account **52420 - Other Supplies** Totals	Invoice Transactions	1	$328.00
Account **53210 - Telephone**				
13969 - AT&T Mobility II, LLC	06-cell phone chgs 06/12-07/11/24-Inv. 287297421132X07192024		07/24/2024	164.08
	Account **53210 - Telephone** Totals	Invoice Transactions	1	$164.08
Account **53910 - Dues and Subscriptions**				
5720 - Galaxy Digital, LLC	09-Galaxy Digital Subscription-BVN Site-9/1/24-8/31/25		08/02/2024	1,981.88
	Account **53910 - Dues and Subscriptions** Totals	Invoice Transactions	1	$1,981.88
Account **53960 - Grants**				
199 - Monroe County Government	09-2024 Women's History Month Luncheon-Space, Tech, Catering		08/02/2024	1,557.00
	Account **53960 - Grants** Totals	Invoice Transactions	1	$1,557.00
	Program **090000 - Main** Totals	Invoice Transactions	4	$4,030.96
	Department **09 - CFRD** Totals	Invoice Transactions	4	$4,030.96
Department **10 - Legal**				
Program **100000 - Main**				
Account **52110 - Office Supplies**				
6530 - Office Depot, INC	10-paper clips, boxes, eraser		08/02/2024	81.36
6530 - Office Depot, INC	10-Staple remover		08/02/2024	3.96
6530 - Office Depot, INC	10-dry erase marker		08/02/2024	21.09
	Account **52110 - Office Supplies** Totals	Invoice Transactions	3	$106.41
Account **53310 - Printing**				

Board of Public Works Claim Register

Invoice Date Range 07/20/24 - 08/02/24

199 - Monroe County Government	10-5 copies of Deeds-June 2024		08/02/2024	5.00
	Account **53310 - Printing** Totals	Invoice Transactions	1	$5.00
Account **53990 - Other Services and Charges**				
7855 - Veritext LLC	10-Transcription Fees - IU Chapter of Turning Point-6/14/24		08/02/2024	481.55
	Account **53990 - Other Services and Charges** Totals	Invoice Transactions	1	$481.55
	Program **100000 - Main** Totals	Invoice Transactions	5	$592.96
	Department **10 - Legal** Totals	Invoice Transactions	5	$592.96
Department **11 - Mayor's Office**				
Program **110000 - Main**				
Account **47110 - Miscellaneous**				
8541 - Amazon.com Sales, INC (Amazon.com Services LLC)	11 - Work phone accessories-adapter, phone case		08/02/2024	52.93
	Account **47110 - Miscellaneous** Totals	Invoice Transactions	1	$52.93
Account **52110 - Office Supplies**				
8541 - Amazon.com Sales, INC (Amazon.com Services LLC)	11 - Paper towels		08/02/2024	7.20
	Account **52110 - Office Supplies** Totals	Invoice Transactions	1	$7.20
Account **53210 - Telephone**				
13969 - AT&T Mobility II, LLC	06-cell phone chgs 06/12-07/11/24-Inv. 287287430216X07192024		07/24/2024	240.71
	Account **53210 - Telephone** Totals	Invoice Transactions	1	$240.71
	Program **110000 - Main** Totals	Invoice Transactions	3	$300.84
	Department **11 - Mayor's Office** Totals	Invoice Transactions	3	$300.84

Board of Public Works Claim Register

Invoice Date Range 07/20/24 - 08/02/24

Department **12 - Human Resources**

Program **120000 - Main**

Account **52110 - Office Supplies**

6530 - Office Depot, INC	12-easel pad		08/02/2024	39.99
6530 - Office Depot, INC	12- Stapler, tape dispenser, calculator, scissors		08/02/2024	19.95
	Account **52110 - Office Supplies** Totals	Invoice Transactions 2		$59.94

Account **52420 - Other Supplies**

8541 - Amazon.com Sales, INC (Amazon.com Services LLC)	12-counter clicker for recruitment events		08/02/2024	7.83
6530 - Office Depot, INC	12-ergonomic keyboard and mousepad		08/02/2024	127.65
	Account **52420 - Other Supplies** Totals	Invoice Transactions 2		$135.48

Account **53210 - Telephone**

13969 - AT&T Mobility II, LLC	06-cell phone chgs 06/12-07/11/24-Inv. 287297421132X07192024		07/24/2024	95.09
	Account **53210 - Telephone** Totals	Invoice Transactions 1		$95.09

Account **53230 - Travel**

8799 - Stephen Anthony Johnson	12-S Johnson Travel Reimbursement for Black Expo		08/02/2024	216.00
	Account **53230 - Travel** Totals	Invoice Transactions 1		$216.00

Account **53320 - Advertising**

9384 - AmericasBest Enterprises INC (HLPA - Hispanic)	12-employer membership for job postings-expires 12/31/25		08/02/2024	4,995.00
9148 - Office Easel LLC	12-custom recruitment brochures (500)		08/02/2024	290.00
	Account **53320 - Advertising** Totals	Invoice Transactions 2		$5,285.00

Board of Public Works Claim Register

Invoice Date Range 07/20/24 - 08/02/24

Account **53990 - Other Services and Charges**

53442 - Paragon Micro, INC	12-H Kanyi Dell monitor and dock		08/02/2024	399.98
	Account **53990 - Other Services and Charges** Totals	Invoice Transactions	1	$399.98
	Program **120000 - Main** Totals	Invoice Transactions	9	$6,191.49
	Department **12 - Human Resources** Totals	Invoice Transactions	9	$6,191.49

Department **13 - Planning**

Program **130000 - Main**

Account **53210 - Telephone**

13969 - AT&T Mobility II, LLC	06-cell phone chgs 06/12-07/11/24-Inv. 287297421132X07192024		07/24/2024	369.18
	Account **53210 - Telephone** Totals	Invoice Transactions	1	$369.18

Account **53990 - Other Services and Charges**

6235 - Toole Design Group, LLC	13- Safe Streets and Roads for All Action Plan thru 06/28/24	BC 2022-086	08/02/2024	6,393.59
	Account **53990 - Other Services and Charges** Totals	Invoice Transactions	1	$6,393.59
	Program **130000 - Main** Totals	Invoice Transactions	2	$6,762.77

Program **132000 - MPO**

Account **53990 - Other Services and Charges**

3414 - Burgess & Niple, INC	13- BMCMPO 2050 Transportation Plan 06/01/24-06/30/24	BC 2023-082	08/02/2024	11,000.01
	Account **53990 - Other Services and Charges** Totals	Invoice Transactions	1	$11,000.01
	Program **132000 - MPO** Totals	Invoice Transactions	1	$11,000.01
	Department **13 - Planning** Totals	Invoice Transactions	3	$17,762.78

Board of Public Works Claim Register

Invoice Date Range 07/20/24 - 08/02/24

Department **19 - Facilities Maintenance**

Program **190000 - Main**

Account **52310 - Building Materials and Supplies**

9383 - Clutch INC	19 -2 barricades for City Hall EV chargers		08/02/2024	800.00
	Account **52310 - Building Materials and Supplies** Totals	Invoice Transactions	1	$800.00

Account **52420 - Other Supplies**

8541 - Amazon.com Sales, INC (Amazon.com Services LLC)	19 - HDMI cord for TV-Computer display in JD Boruff office		08/02/2024	9.85
8541 - Amazon.com Sales, INC (Amazon.com Services LLC)	19 - Folding plastic tables (5)		08/02/2024	767.90
	Account **52420 - Other Supplies** Totals	Invoice Transactions	2	$777.75

Account **52430 - Uniforms and Tools**

4574 - John Deere Financial f.s.b. (Rural King)	19- Water For Brighten B-Town		08/02/2024	28.90
19171 - Vestis Group, INC (FKA Aramark)	19 - Uniform pants for R Flake-7/4/24		08/02/2024	14.20
	Account **52430 - Uniforms and Tools** Totals	Invoice Transactions	2	$43.10

Account **53210 - Telephone**

13969 - AT&T Mobility II, LLC	06-cell phone chgs 06/12-07/11/24-Inv. 287289748780X07192024		07/24/2024	167.04
13969 - AT&T Mobility II, LLC	06-Unlim'td LTE Laptp/Hotspt-6/12-7/11/24-287327321618X07192024		07/24/2024	39.24
	Account **53210 - Telephone** Totals	Invoice Transactions	2	$206.28

Account **53510 - Electrical Services**

223 - Duke Energy	19-Fac Summary Elec Billing-06/04/24-07/01/2024			10,182.89
	Account **53510 - Electrical Services** Totals	Invoice Transactions	1	$10,182.89

Board of Public Works Claim Register

Invoice Date Range 07/20/24 - 08/02/24

Account **53610 - Building Repairs**

8143 - Cummins INC dba Cummins Sales and Service	19-SA City Hall generator repair overspeed alarm-7/9/24	BC 2024-006	08/02/2024	2,424.69
321 - Harrell Fish, INC (HFI)	19 - SA City Hall replace water fountain-5/30/24	BC 2023-074	08/02/2024	1,278.55
321 - Harrell Fish, INC (HFI)	19 - SA City Hall repair heat pump in Legal dept-6/12/24	BC 2023-074	08/02/2024	482.00
321 - Harrell Fish, INC (HFI)	19 - SA City Hall quarterly planned maintenance July 2024	BC 2023-074	08/02/2024	2,088.00
	Account **53610 - Building Repairs** Totals	Invoice Transactions	4	$6,273.24

Account **54510 - Other Capital Outlays**

5976 - EV Connect, INC	19-install 2 @ Electric Vehicle Charging Stations (City Hall)		08/02/2024	1,267.00
	Account **54510 - Other Capital Outlays** Totals	Invoice Transactions	1	$1,267.00
	Program **190000 - Main** Totals	Invoice Transactions	13	$19,550.26
	Department **19 - Facilities Maintenance** Totals	Invoice Transactions	13	$19,550.26

Department **26 - Parking**

Program **26CRED - PARKING CRED**

Account **54510 - Other Capital Outlays**

8934 - Sierra Heating and Cooling LLC	26- Walnut St AC unit replacement, copper drain pipe, heat trace		08/02/2024	6,350.00
	Account **54510 - Other Capital Outlays** Totals	Invoice Transactions	1	$6,350.00
	Program **26CRED - PARKING CRED** Totals	Invoice Transactions	1	$6,350.00
	Department **26 - Parking** Totals	Invoice Transactions	1	$6,350.00

Department **28 - ITS**

Program **280000 - Main**

Account **52110 - Office Supplies**

6530 - Office Depot, INC	28-(10) case paper & Legal pads		08/02/2024	401.09
	Account **52110 - Office Supplies** Totals	Invoice Transactions	1	$401.09

Account **53170 - Mgt. Fee, Consultants, and Workshops**

2898 - JDH Contracting, INC	28-Seminary Park Fiber Ext-Wifi in the Parks project 100 W 2nd S		08/02/2024	4,263.00
	Account **53170 - Mgt. Fee, Consultants, and Workshops** Totals	Invoice Transactions	1	$4,263.00

Account **53210 - Telephone**

13969 - AT&T Mobility II, LLC	06-cell phone chgs 06/12-07/11/24-Inv. 287289748780X07192024		07/24/2024	682.07
13969 - AT&T Mobility II, LLC	06-cell phone chgs 06/12-07/11/24-Inv. 287297421132X07192024		07/24/2024	119.50
1079 - AT&T	28-CH/off site fac-long distance chgs 07/09/2023-BAN #849494015		07/24/2024	79.15
	Account **53210 - Telephone** Totals	Invoice Transactions	3	$880.72

Account **53640 - Hardware and Software Maintenance**

3989 - Ricoh USA, INC	28-City Civil Printer/Copier Maintenance 06/17/24-07/16/24		08/02/2024	2,195.10
3989 - Ricoh USA, INC	28-City Civil Printer/Copier Maintenance 06/17/24-07/16/24		08/02/2024	88.61
	Account **53640 - Hardware and Software Maintenance** Totals	Invoice Transactions	2	$2,283.71

Account **53910 - Dues and Subscriptions**

7344 - Periodic INC	28-Online Booking Subscriptions 4/24/24-4/23/25		08/02/2024	6,786.00
8441 - Promevo Holdings, INC (Promevo, LLC)	28-Google Voice Monthly Sub 06/01/24-06/30/24		08/02/2024	68.16
	Account **53910 - Dues and Subscriptions** Totals	Invoice Transactions	2	$6,854.16

Account **53990 - Other Services and Charges**

4186 - Carrier & Gable, INC	18-anchor bolts for cabinet installation at Seminary Park		08/02/2024	42.00
4186 - Carrier & Gable, INC	18-New electrical cabinet installation at Seminary Park (C&G)		08/02/2024	1,172.00
	Account **53990 - Other Services and Charges** Totals	Invoice Transactions	2	$1,214.00
	Program **280000 - Main** Totals	Invoice Transactions	11	$15,896.68
	Department **28 - ITS** Totals	Invoice Transactions	11	$15,896.68
	Fund **101 - General Fund (S0101)** Totals	Invoice Transactions	127	$432,543.33

Fund **103 - Restricted Donations(ord 05-17)**

Department **06 - Controller's Office**

Program **400101 - Animal Medical Services**

Account **53130 - Medical**

6529 - BloomingPaws, LLC	01-Exam-Meep	08/02/2024	52.00
6529 - BloomingPaws, LLC	01-Exam-Tuxedo Todd	08/02/2024	52.00
6529 - BloomingPaws, LLC	01-Exam-Bunny	08/02/2024	52.00
6529 - BloomingPaws, LLC	01-Exam-CH Kittens	08/02/2024	52.00
6529 - BloomingPaws, LLC	01-Xrays & hospitalization-Bunny	08/02/2024	156.00
6529 - BloomingPaws, LLC	01-Enema with anesthesia-Bunny	08/02/2024	172.66
6529 - BloomingPaws, LLC	01-Hospitalization and Exam-Nuzzle	08/02/2024	174.37
6529 - BloomingPaws, LLC	01-X Ray & pain management-Tuxedo Todd	08/02/2024	186.36
6529 - BloomingPaws, LLC	01-Exam and x-rays-C2406698 B	08/02/2024	192.00
6529 - BloomingPaws, LLC	01-Enema and x-rays-Bunny	08/02/2024	263.00

3929 - IDEXX Laboratories, INC	01-Blood work	08/02/2024		325.70
3929 - IDEXX Laboratories, INC	01-Blood work, fecal, urinalysis	08/02/2024		390.94
	Account **53130 - Medical** Totals	Invoice Transactions	12	$2,069.03
	Program **400101 - Animal Medical Services** Totals	Invoice Transactions	12	$2,069.03
Program **400102 - Animal Supplies**				
Account **52210 - Institutional Supplies**				
4137 - Patterson Veterinary Supply, INC	01-Thyroid meds	08/02/2024		11.66
4137 - Patterson Veterinary Supply, INC	01-Flavor syrup for med compounding	08/02/2024		26.82
	Account **52210 - Institutional Supplies** Totals	Invoice Transactions	2	$38.48
	Program **400102 - Animal Supplies** Totals	Invoice Transactions	2	$38.48
	Department **06 - Controller's Office** Totals	Invoice Transactions	14	$2,107.51
	Fund **103 - Restricted Donations(ord 05-17)** Totals	Invoice Transactions	14	$2,107.51
Fund **152 - Food & Beverage Tax(S9509)**				
Department **06 - Controller's Office**				
Program **060000 - Main**				
Account **53110 - Engineering and Architectural**				
8305 - Schmidt Associates, INC	11- Rescoping Study - Convention Center April 1-April 30, 2024	08/02/2024		24,500.00
8305 - Schmidt Associates, INC	11- Rescoping Study - Convention Center July 1-July 31, 2024	08/02/2024		12,251.65
8305 - Schmidt Associates, INC	11- Rescoping Study - Convention Center May 1 - May 31, 2024	08/02/2024		12,250.00
	Account **53110 - Engineering and Architectural** Totals	Invoice Transactions	3	$49,001.65

Board of Public Works Claim Register

Invoice Date Range 07/20/24 - 08/02/24

Account **53990 - Other Services and Charges**

9279 - Monroe County Capital Improvement Board (CIB)	06 City's portion Convention Center Proj-June 2024		08/02/2024	43,892.19
	Account **53990 - Other Services and Charges** Totals	Invoice Transactions	1	$43,892.19
	Program **060000 - Main** Totals	Invoice Transactions	4	$92,893.84
	Department **06 - Controller's Office** Totals	Invoice Transactions	4	$92,893.84
	Fund **152 - Food & Beverage Tax(S9509)** Totals	Invoice Transactions	4	$92,893.84

Fund **153 - LIT – Economic Development**

Department **04 - Economic & Sustainable Dev**

Program **040000 - Main**

Account **53960 - Grants**

8737 - ADS Consulting INC (Stone Municipal Group)	04-Enterprise Zone Invest Deduction (EZID) Proj Review-May 2024		08/02/2024	1,180.00
8737 - ADS Consulting INC (Stone Municipal Group)	04-:Enterprise Zone Invest Deduction (EZID) Proj Review-June 24'		08/02/2024	1,165.00
786 - Richard's Small Engine, INC	04-Parks & Rec Battery Powered Equipment		08/02/2024	12,806.33
786 - Richard's Small Engine, INC	04-Parks & Rec Battery Powered Equip-bristle brush attachment		08/02/2024	257.39
8448 - TEN31 Marketing LLC	04-Marketing Services for Go Bloomington June 2024		08/02/2024	6,127.50
8550 - Veregy IN, LLC	04- Inspections and Repairs of Solar Sites 06/24/24		08/02/2024	4,050.00
	Account **53960 - Grants** Totals	Invoice Transactions	6	$25,586.22
	Program **040000 - Main** Totals	Invoice Transactions	6	$25,586.22
	Department **04 - Economic & Sustainable Dev** Totals	Invoice Transactions	6	$25,586.22

Department **06 - Controller's Office**

Board of Public Works Claim Register

Invoice Date Range 07/20/24 - 08/02/24

Program **060000 - Main**

Account **53170 - Mgt. Fee, Consultants, and Workshops**

19660 - Bose McKinney & Evans, LLP	06-Annexation Remonstrances May - June 2024		08/02/2024	58,678.58
Account **53170 - Mgt. Fee, Consultants, and Workshops** Totals		Invoice Transactions	1	$58,678.58
Program **060000 - Main** Totals		Invoice Transactions	1	$58,678.58
Department **06 - Controller's Office** Totals		Invoice Transactions	1	$58,678.58

Department **12 - Human Resources**

Program **120000 - Main**

Account **53990 - Other Services and Charges**

19660 - Bose McKinney & Evans, LLP	12-employment law consultation- June 2024		08/02/2024	50.00
Account **53990 - Other Services and Charges** Totals		Invoice Transactions	1	$50.00
Program **120000 - Main** Totals		Invoice Transactions	1	$50.00
Department **12 - Human Resources** Totals		Invoice Transactions	1	$50.00

Department **19 - Facilities Maintenance**

Program **190000 - Main**

Account **53990 - Other Services and Charges**

9281 - Jack Henry Bryant (H and K Maintenance LLC)	19-SA-800 BL Dodds/1200 BL N Madison- BC 2024-036 mowing-May 2024		08/02/2024	625.00
Account **53990 - Other Services and Charges** Totals		Invoice Transactions	1	$625.00
Program **190000 - Main** Totals		Invoice Transactions	1	$625.00
Department **19 - Facilities Maintenance** Totals		Invoice Transactions	1	$625.00

Board of Public Works Claim Register

Invoice Date Range 07/20/24 - 08/02/24

Department **28 - ITS**

Program **280000 - Main**

Account **53980 - Community Access TV/Radio**

64 - Monroe County Public Library	28-Public Mtg Recording, Broad, Stream (CATS) July-Sept 2024	BC 2023-087	08/02/2024	116,242.25
Account **53980 - Community Access TV/Radio** Totals		Invoice Transactions	1	$116,242.25
Program **280000 - Main** Totals		Invoice Transactions	1	$116,242.25
Department **28 - ITS** Totals		Invoice Transactions	1	$116,242.25
Fund **153 - LIT – Economic Development** Totals		Invoice Transactions	10	$201,182.05

Fund **157 - LOIT Special Distribution(S0075)**

Department **20 - Street**

Program **200000 - Main**

Account **54440 - Motor Equipment**

2974 - MacAllister Machinery Co, INC	20-Catapillar 3 Ton Asphalt Roller (Sourcewell #060122-CAT)		08/02/2024	88,042.12
5698 - Vogel Traffic Services, INC (EZ-Liner Industries)	20-AL120 Base 2 Cart paint striper (Sourcewell# 080521-EZ)		08/02/2024	93,110.00
Account **54440 - Motor Equipment** Totals		Invoice Transactions	2	$181,152.12
Program **200000 - Main** Totals		Invoice Transactions	2	$181,152.12
Department **20 - Street** Totals		Invoice Transactions	2	$181,152.12
Fund **157 - LOIT Special Distribution(S0075)** Totals		Invoice Transactions	2	$181,152.12

Fund **176 - ARPA Local Fiscal Recvry (S9512)**

Department **07 - Engineering**

Board of Public Works Claim Register

Invoice Date Range 07/20/24 - 08/02/24

Program **G21005 - ARPA COVID Local Fiscal Recovery**

Account **54310 - Improvements Other Than Building**

5149 - E&B Paving, INC	07-Morningside DR Greenway-Retainage Release	BC 2023-406	08/02/2024	18,096.64
5999 - The Etica Group, INC	07-Neighborhood Greenways, Eagle Ridge 05/01-05/31/24	BC 2024-025	08/02/2024	7,064.33
	Account **54310 - Improvements Other Than Building** Totals	Invoice Transactions	2	$25,160.97
	Program **G21005 - ARPA COVID Local Fiscal Recovery** Totals	Invoice Transactions	2	$25,160.97
	Department **07 - Engineering** Totals	Invoice Transactions	2	$25,160.97
	Fund **176 - ARPA Local Fiscal Recvry (S9512)** Totals	Invoice Transactions	2	$25,160.97

Fund **249 - Grants Non Approp**

Department **04 - Economic & Sustainable Dev**

Program **G22008 - 2021 to 2024 Brownfield**

Account **53990 - Other Services and Charges**

4571 - BCA Environmental Consultants, LLC	04-2021-2024 EPA Brownfield Grant Prog Management 06/30/24-100%		08/02/2024	640.00
4571 - BCA Environmental Consultants, LLC	04-21-24 EPA Brownfield Grant Brownfield Inv & Prior 06/30/24		08/02/2024	800.00
4571 - BCA Environmental Consultants, LLC	04-2021-2024 EPA Brownfield Grant SYP 1601 S. Rogers 06/30/24		08/02/2024	504.00
4571 - BCA Environmental Consultants, LLC	04-2021-2024 EPA Brownfield Grant 413 W 2nd St 06/30/24		08/02/2024	1,018.32
4571 - BCA Environmental Consultants, LLC	04-2021-2024 EPA Brownfield Grant 216 S. College 06/30/24		08/02/2024	641.94
	Account **53990 - Other Services and Charges** Totals	Invoice Transactions	5	$3,604.26
	Program **G22008 - 2021 to 2024 Brownfield** Totals	Invoice Transactions	5	$3,604.26

Program **G24006 - 2024 Economic Devel Adj Assist**

Board of Public Works Claim Register

Invoice Date Range 07/20/24 - 08/02/24

Account **53960 - Grants**

3885 - Building Associates, INC	04-Trades District Tech Center-App 7 (Inv #14931)		08/02/2024	751,343.60
3885 - Building Associates, INC	04-Trades District Tech Center-App 8 (Inv #14030)		08/02/2024	264,928.40
	Account **53960 - Grants** Totals	Invoice Transactions	2	$1,016,272.00
	Program **G24006 - 2024 Economic Devel Adj Assist** Totals	Invoice Transactions	2	$1,016,272.00
	Department **04 - Economic & Sustainable Dev** Totals	Invoice Transactions	7	$1,019,876.26
	Fund **249 - Grants Non Approp** Totals	Invoice Transactions	7	$1,019,876.26

Fund **312 - Community Services**

Department **09 - CFRD**

Program **090003 - Com Serv - Status of Women**

Account **52420 - Other Supplies**

199 - Monroe County Government	09-2024 Women's History Month Luncheon-Space, Tech, Catering		08/02/2024	12,645.56
	Account **52420 - Other Supplies** Totals	Invoice Transactions	1	$12,645.56
	Program **090003 - Com Serv - Status of Women** Totals	Invoice Transactions	1	$12,645.56

Program **090018 - CBVN**

Account **53990 - Other Services and Charges**

5720 - Galaxy Digital, LLC	09-Galaxy Digital Subscription-BVN Site-9/1/24-8/31/25		08/02/2024	1,981.87
	Account **53990 - Other Services and Charges** Totals	Invoice Transactions	1	$1,981.87
	Program **090018 - CBVN** Totals	Invoice Transactions	1	$1,981.87
	Department **09 - CFRD** Totals	Invoice Transactions	2	$14,627.43

	Fund **312 - Community Services** Totals	Invoice Transactions	2	$14,627.43

Fund **401 - Non-Reverting Telecom (S1146)**

Department **25 - Telecommunications**

Program **254000 - Infrastructure**

Account **53640 - Hardware and Software Maintenance**

902 - Indiana Underground Plant Protection Service, INC	28-BDU 811 Line Location Service June 2024		08/02/2024	503.50
	Account **53640 - Hardware and Software Maintenance** Totals	Invoice Transactions	1	$503.50
	Program **254000 - Infrastructure** Totals	Invoice Transactions	1	$503.50

Program **256000 - Services**

Account **53150 - Communications Contract**

4170 - Comcast Cable Communications, INC	25 - Comcast Internet - 401 N Morton August 2024		07/24/2024	222.90
	Account **53150 - Communications Contract** Totals	Invoice Transactions	1	$222.90
	Program **256000 - Services** Totals	Invoice Transactions	1	$222.90
	Department **25 - Telecommunications** Totals	Invoice Transactions	2	$726.40
	Fund **401 - Non-Reverting Telecom (S1146)** Totals	Invoice Transactions	2	$726.40

Fund **450 - Local Road and Street(S0706)**

Department **20 - Street**

Program **200000 - Main**

Account **53520 - Street Lights / Traffic Signals**

223 - Duke Energy	02-Street Light (Misc Lights)-06/05/24-07/10/24			234.82

223 - Duke Energy	02-Street Light (Misc Lights)-06/05/24-07/02/24			117.19
223 - Duke Energy	02-Street Light (Misc Lights)-06/04/24-07/02/24			782.03
223 - Duke Energy	02-Street Light (Misc Lights)-06/05/24-07/02/24			53.35
223 - Duke Energy	02-Street Light (Misc Lights)-06/05/24-07/02/24			31.01
223 - Duke Energy	02-Street Light (Misc Lights)-06/05/24-07/02/24			25.12
223 - Duke Energy	02-Street Light (Misc Lights)-06/05/24-07/02/24			155.38
223 - Duke Energy	02-Traffic Signals-06/05/24-07/02/24			426.39
223 - Duke Energy	02-Traffic Signals-06/04/24-07/02/24			330.84
223 - Duke Energy	02-Traffic Signals-06/05/24-07/02/24			548.50
223 - Duke Energy	02-Traffic Signals-06/04/24-07/02/24			539.15
	Account **53520 - Street Lights / Traffic Signals** Totals	Invoice Transactions	11	$3,243.78
	Program **200000 - Main** Totals	Invoice Transactions	11	$3,243.78
	Department **20 - Street** Totals	Invoice Transactions	11	$3,243.78
	Fund **450 - Local Road and Street(S0706)** Totals	Invoice Transactions	11	$3,243.78

Fund **451 - Motor Vehicle Highway(S0708)**

Department **20 - Street**

Program **200000 - Main**

Account **52110 - Office Supplies**

8541 - Amazon.com Sales, INC (Amazon.com Services LLC)	20-Office Supplies for Street Admin (binder, dividers & pens)		08/02/2024	47.64
	Account **52110 - Office Supplies** Totals	Invoice Transactions	1	$47.64

Board of Public Works Claim Register

Invoice Date Range 07/20/24 - 08/02/24

Account **52210 - Institutional Supplies**

8541 - Amazon.com Sales, INC (Amazon.com Services LLC)	20-Ivy Post Contact Wipes for tree removal	08/02/2024	34.64
8541 - Amazon.com Sales, INC (Amazon.com Services LLC)	20-Hard hat sweatbands for tree crews	08/02/2024	17.99
313 - Fastenal Company	20-Safety Supplies for Crews-safety glasses, gloves, towels	08/02/2024	240.34
313 - Fastenal Company	20-Safety Supplies for Crews-tape measure, earplugs, gloves	08/02/2024	259.73
4574 - John Deere Financial f.s.b. (Rural King)	20-Apron chapps for tree crews (4)	08/02/2024	359.96
7516 - Quality Supply & Tool Co INC	20-Ivy Xpost contact for crews	08/02/2024	27.51
	Account **52210 - Institutional Supplies** Totals	Invoice Transactions 6	$940.17

Account **52340 - Other Repairs and Maintenance**

293 - J&S Locksmith Shop, INC	20-10 Locks for signal cabinet service point	08/02/2024	210.00
603 - Traffic Control Corporation	20-LED Ped Inserts (12)	08/02/2024	2,196.00
	Account **52340 - Other Repairs and Maintenance** Totals	Invoice Transactions 2	$2,406.00

Account **52420 - Other Supplies**

294 - All-Phase Electric Supply, INC	20-Plug for tack wagon (paving)	08/02/2024	13.46
8541 - Amazon.com Sales, INC (Amazon.com Services LLC)	20-USBC Chargers for Cityworks Ipads	08/02/2024	44.95
8541 - Amazon.com Sales, INC (Amazon.com Services LLC)	20-Otterbox cell phone protector for Bitner	08/02/2024	20.99
8541 - Amazon.com Sales, INC (Amazon.com Services LLC)	20-Credit for Otterbox Lost in transit-Inv 16GL-PN7L-1CN7	08/02/2024	(20.99)
8541 - Amazon.com Sales, INC (Amazon.com Services LLC)	20-Otterbox cell phone protector for Bitner	08/02/2024	27.27
409 - Black Lumber Co. INC	20-Tools & Supplies for Street CutCrews-pliers, screws, square	08/02/2024	96.90
409 - Black Lumber Co. INC	20-Zip ties for Street Cut Crew	08/02/2024	5.99

Board of Public Works Claim Register

Invoice Date Range 07/20/24 - 08/02/24

409 - Black Lumber Co. INC	20-Torx T25 2" 5 pk Diablo for Concrete Crew	08/02/2024	5.99
409 - Black Lumber Co. INC	20-(2) Wasp & hornet killer & spray for Sign Crew	08/02/2024	14.96
409 - Black Lumber Co. INC	20-10pk Utility blades and Stanely fixed knife	08/02/2024	8.48
409 - Black Lumber Co. INC	20-Side Boards for Tandems	08/02/2024	128.76
409 - Black Lumber Co. INC	20-Shop towels for Tack Wagon	08/02/2024	9.46
409 - Black Lumber Co. INC	20-Spade drill for pavement markings	08/02/2024	219.97
409 - Black Lumber Co. INC	20-Caps for street cut crew	08/02/2024	13.98
409 - Black Lumber Co. INC	20-(10) 1x4-10 Pine Pro	08/02/2024	49.90
4574 - John Deere Financial f.s.b. (Rural King)	20-Sprayer, 2 gallon for paving crew	08/02/2024	77.94
8658 - Kleindorfer's Hardware LLC	20-Mouse Bait and drill bit for cabinets	08/02/2024	22.77
8658 - Kleindorfer's Hardware LLC	20-Sledge Hammer for Sign Crew	08/02/2024	19.99
8658 - Kleindorfer's Hardware LLC	20-2 Cycle Oil & Black Stallion gloves (60 ct)	08/02/2024	260.71
8658 - Kleindorfer's Hardware LLC	20-Gas can, 30 sq ft of cord & plugs for tack wagon	08/02/2024	202.97
8658 - Kleindorfer's Hardware LLC	20-Generator Cord for office	08/02/2024	93.99
6262 - Koenig Equipment, INC	20-Stihl chain for tree crew	08/02/2024	37.69
7516 - Quality Supply & Tool Co INC	20-Alum concrete place with 60" handle & rain jackets for crews	08/02/2024	102.66
786 - Richard's Small Engine, INC	20-T435 top chain saw for tree crew	08/02/2024	399.99
1743 - The Home City Ice Company	20-Ice replacement due to storm power outage	08/02/2024	299.70
	Account **52420 - Other Supplies** Totals	Invoice Transactions 25	$2,158.48

Account **53150 - Communications Contract**

5465 - Emergency Radio Service LLC (ERS-OCI Wireless)	20-Two-way radio services for crews July 2024	08/02/2024	2,321.25
	Account **53150 - Communications Contract** Totals	Invoice Transactions 1	$2,321.25
Account **53160 - Instruction**			
1481 - Ivy Tech Community College of Indiana	20-CDL License Training - Bartlett-5/29-6/14/24	08/02/2024	4,360.00
	Account **53160 - Instruction** Totals	Invoice Transactions 1	$4,360.00
Account **53210 - Telephone**			
13969 - AT&T Mobility II, LLC	06-cell phone chgs 06/12-07/11/24-Inv. 287289748780X07192024	07/24/2024	240.04
13969 - AT&T Mobility II, LLC	06-cell phone chgs 06/12-07/11/24-Inv. 287297421132X07192024	07/24/2024	312.83
13969 - AT&T Mobility II, LLC	06-Unlim'td LTE Laptp/Hotspt-6/12-7/11/24-287327321618X07192024	07/24/2024	29.24
1079 - AT&T	28-CH/off site fac-long distance chgs 07/09/2023-BAN #849494015	07/24/2024	9.35
	Account **53210 - Telephone** Totals	Invoice Transactions 4	$591.46
Account **53250 - Pagers**			
332 - Indiana Paging Network, INC	20-Pagers for Snow Control Crews August 2024	08/02/2024	158.95
	Account **53250 - Pagers** Totals	Invoice Transactions 1	$158.95
Account **53510 - Electrical Services**			
223 - Duke Energy	19-Fac Summary Elec Billing-06/04/24-07/01/2024		25.04
	Account **53510 - Electrical Services** Totals	Invoice Transactions 1	$25.04
Account **53530 - Water and Sewer**			
208 - City Of Bloomington Utilities	20-Street Dept-fire hydrant-water/sewer bill-June 2024	07/24/2024	47.22
208 - City Of Bloomington Utilities	20-Street Dept-water/sewer bill-June 2024	07/24/2024	284.73

Board of Public Works Claim Register

Invoice Date Range 07/20/24 - 08/02/24

208 - City Of Bloomington Utilities	20-Traffic Bldg-water/sewer bill-June 2024		07/24/2024	40.93
Account **53530 - Water and Sewer** Totals		Invoice Transactions	3	$372.88
Account **53610 - Building Repairs**				
6378 - ANN-KRISS, LLC	20-SA-Remove & replace door on Street Dept building	BC 2023-064	08/02/2024	3,640.00
Account **53610 - Building Repairs** Totals		Invoice Transactions	1	$3,640.00
Account **53630 - Machinery and Equipment Repairs**				
244 - Bloomington Ford, INC	20-Body Shop Repairs to Unit #413-3/7/24		08/02/2024	1,406.03
Account **53630 - Machinery and Equipment Repairs** Totals		Invoice Transactions	1	$1,406.03
Account **53920 - Laundry and Other Sanitation Services**				
19171 - Vestis Group, INC (FKA Aramark)	20-uniform rental (minus payroll ded)-7/10/24		08/02/2024	9.01
19171 - Vestis Group, INC (FKA Aramark)	20-mat/towel service-7/10/24		08/02/2024	42.58
19171 - Vestis Group, INC (FKA Aramark)	20-mat/towel service-7/3/24		08/02/2024	42.58
19171 - Vestis Group, INC (FKA Aramark)	20-uniform rental (minus payroll ded)-7/3/24		08/02/2024	9.01
19171 - Vestis Group, INC (FKA Aramark)	20-uniform rental (minus payroll ded)-7/17/24		08/02/2024	9.01
19171 - Vestis Group, INC (FKA Aramark)	20-mat/towel service-7/17/24		08/02/2024	42.58
Account **53920 - Laundry and Other Sanitation Services** Totals		Invoice Transactions	6	$154.77
Account **53990 - Other Services and Charges**				
3735 - Bluestone Tree, INC.	20-Storm 06.25 - Manage tree debris pile at Dog Park		08/02/2024	7,680.00
902 - Indiana Underground Plant Protection Service, INC	20-Line Locate Ticket Services for February 2024		08/02/2024	623.20
902 - Indiana Underground Plant Protection Service, INC	20-Line Locate Ticket Services for April 2024		08/02/2024	941.45

902 - Indiana Underground Plant Protection Service, INC	20-Line Locate Ticket Services for June 2024		08/02/2024	856.90
622 - Truck Country of Indiana, INC (Stoops Freightliner	20-Repairs to vehicle #4661 due to accident		08/02/2024	14,942.06
	Account **53990 - Other Services and Charges** Totals	Invoice Transactions	5	$25,043.61
	Program **200000 - Main** Totals	Invoice Transactions	58	$43,626.28
	Department **20 - Street** Totals	Invoice Transactions	58	$43,626.28
	Fund **451 - Motor Vehicle Highway(S0708)** Totals	Invoice Transactions	58	$43,626.28

Fund **452 - Parking Facilities(S9502)**

Department **26 - Parking**

Program **260000 - Main**

Account **43160 - Lot/Garage Leases - Annual**

Trevor Knight	26-Cancelled on May, was charged on 7/1/24		08/02/2024	113.00
	Account **43160 - Lot/Garage Leases - Annual** Totals	Invoice Transactions	1	$113.00

Account **52310 - Building Materials and Supplies**

8658 - Kleindorfer's Hardware LLC	26-Sheet metal and foam to seal a hole		08/02/2024	25.98
	Account **52310 - Building Materials and Supplies** Totals	Invoice Transactions	1	$25.98

Account **53210 - Telephone**

13969 - AT&T Mobility II, LLC	06-cell phone chgs 06/12-07/11/24-Inv. 287289748780X07192024		07/24/2024	167.04
13969 - AT&T Mobility II, LLC	06-Unlim'td LTE Laptp/Hotspt-6/12-7/11/24-287327321618X07192024		07/24/2024	58.48
1079 - AT&T	28-CH/off site fac-long distance chgs 07/09/2023-BAN #849494015		07/24/2024	2.76
	Account **53210 - Telephone** Totals	Invoice Transactions	3	$228.28

Board of Public Works Claim Register

Invoice Date Range 07/20/24 - 08/02/24

Account **53510 - Electrical Services**

223 - Duke Energy	26-Walnut St Garage-300 N Walnut-elec chgs 06/04/24-07/01/24		07/24/2024	793.50
	Account **53510 - Electrical Services** Totals		Invoice Transactions 1	$793.50

Account **53530 - Water and Sewer**

208 - City Of Bloomington Utilities	26-4th St Garage-water/sewer bill - June 2024		07/24/2024	289.21
208 - City Of Bloomington Utilities	26-Morton St Garage-water/sewer bill-June 2024		07/24/2024	57.56
208 - City Of Bloomington Utilities	26-Trades Garage-489 W. 10th Street water/sewer - June 2024		07/24/2024	151.01
	Account **53530 - Water and Sewer** Totals		Invoice Transactions 3	$497.78

Account **53540 - Natural Gas**

222 - Indiana Gas Co. INC (CenterPoint Energy) (Vectren)	26-Trades Garage-489 W. 10th-gas bill 06/04/24-07/02/24		07/24/2024	50.78
222 - Indiana Gas Co. INC (CenterPoint Energy) (Vectren)	26-4th St Garage-105 W. 4th St-gas bill 06/04/24-07/02/24		07/24/2024	48.77
	Account **53540 - Natural Gas** Totals		Invoice Transactions 2	$99.55

Account **53610 - Building Repairs**

393 - Kone INC	26-Walnut St Garage-monthly elevator maint-July 2024	BC 2023-101	08/02/2024	242.06
393 - Kone INC	26-Morton Street Garage elevator maintenance period-July 2024	BC 2023-101	08/02/2024	531.64
393 - Kone INC	26-Trades District Garage elevator maintenance period-July 2024	BC 2023-101	08/02/2024	1,063.28
393 - Kone INC	26-Fourth Street Garage elevator maintenance period-July 2024	BC 2023-101	08/02/2024	1,063.28
393 - Kone INC	26-Garages-monthly elevator maintenance-June 2023	BC 2023-004	08/02/2024	2,466.77
	Account **53610 - Building Repairs** Totals		Invoice Transactions 5	$5,367.03

Account **53650 - Other Repairs**

Board of Public Works Claim Register

Invoice Date Range 07/20/24 - 08/02/24

8143 - Cummins INC dba Cummins Sales and Service	26-Trades District Garage-generator maintenance service-6/20/24	BC 2024-006	08/02/2024	621.50
8143 - Cummins INC dba Cummins Sales and Service	26-4th ST Garage generator maintenance service-6/4/24	BC 2024-006	08/02/2024	573.50
5239 - Mother Nature Landscaping, INC (Turf N'Tree MD)	26-flowers for Fourth Street planter boxes		08/02/2024	495.00
	Account **53650 - Other Repairs** Totals	Invoice Transactions	3	$1,690.00
	Program **260000 - Main** Totals	Invoice Transactions	19	$8,815.12
	Department **26 - Parking** Totals	Invoice Transactions	19	$8,815.12
	Fund **452 - Parking Facilities(S9502)** Totals	Invoice Transactions	19	$8,815.12

Fund **454 - Alternative Transport(S6301)**

Department **02 - Public Works**

Program **020000 - Main**

Account **43170.0011 - Residential Neighborhood Permits Zone #11**

Catherine D Ratcliff	26-Customer ordered two permits for the same vehicle		08/02/2024	30.00
	Account **43170.0011 - Residential Neighborhood Permits Zone #11** Totals	Invoice Transactions	1	$30.00

Account **46060 - Other Violations**

Michael Jacob Kleer	26-Customer paid tickets before they were voided		08/02/2024	120.00
	Account **46060 - Other Violations** Totals	Invoice Transactions	1	$120.00
	Program **020000 - Main** Totals	Invoice Transactions	2	$150.00
	Department **02 - Public Works** Totals	Invoice Transactions	2	$150.00

Department **07 - Engineering**

Program **070000 - Main**

Board of Public Works Claim Register

Invoice Date Range 07/20/24 - 08/02/24

Account **53110 - Engineering and Architectural**

5999 - The Etica Group, INC	07-Downtown Curb Ramps Ph4 05/01/24-05/31/24	BC 2023-050	08/02/2024	1,158.50
5409 - VS Engineering, INC	07-Crosswalk Ph2 (PE)-period ending 04/30/24		08/02/2024	3,240.00
	Account **53110 - Engineering and Architectural** Totals	Invoice Transactions	2	$4,398.50
	Program **070000 - Main** Totals	Invoice Transactions	2	$4,398.50
	Department **07 - Engineering** Totals	Invoice Transactions	2	$4,398.50

Department **26 - Parking**

Program **260000 - Main**

Account **52110 - Office Supplies**

8541 - Amazon.com Sales, INC (Amazon.com Services LLC)	26-first aid kit for parking services		08/02/2024	94.97
	Account **52110 - Office Supplies** Totals	Invoice Transactions	1	$94.97

Account **52420 - Other Supplies**

8541 - Amazon.com Sales, INC (Amazon.com Services LLC)	26-keyboard and mouse for M. Wahl		08/02/2024	64.97
	Account **52420 - Other Supplies** Totals	Invoice Transactions	1	$64.97

Account **53210 - Telephone**

13969 - AT&T Mobility II, LLC	06-cell phone chgs 06/12-07/11/24-Inv. 287289748780X07192024		07/24/2024	219.00
1079 - AT&T	28-CH/off site fac-long distance chgs 07/09/2023-BAN #849494015		07/24/2024	5.79
	Account **53210 - Telephone** Totals	Invoice Transactions	2	$224.79

Account **53310 - Printing**

8002 - Safeguard Business Systems, INC	26-10,000 envelopes for customer billing and permit mailing		08/02/2024	464.08

Board of Public Works Claim Register

Invoice Date Range 07/20/24 - 08/02/24

Account **53310 - Printing** Totals	Invoice Transactions 1		$464.08
Program **260000 - Main** Totals	Invoice Transactions 5		$848.81
Department **26 - Parking** Totals	Invoice Transactions 5		$848.81
Fund **454 - Alternative Transport(S6301)** Totals	Invoice Transactions 9		$5,397.31

Fund **455 - Parking Meter Fund(S2141)**

Department **26 - Parking**

Program **260000 - Main**

Account **52110 - Office Supplies**

8541 - Amazon.com Sales, INC (Amazon.com Services LLC)	26-air freshener-tape for parking services	08/02/2024	14.98
8541 - Amazon.com Sales, INC (Amazon.com Services LLC)	26-first aid kit for parking services	08/02/2024	94.98
651 - Engraving & Stamp Center, INC	26-copy stamp for parking services office	08/02/2024	41.50
Account **52110 - Office Supplies** Totals	Invoice Transactions 3		$151.46

Account **52340 - Other Repairs and Maintenance**

313 - Fastenal Company	26-plastic wire ties for special event posting	08/02/2024	231.60
Account **52340 - Other Repairs and Maintenance** Totals	Invoice Transactions 1		$231.60

Account **52420 - Other Supplies**

8541 - Amazon.com Sales, INC (Amazon.com Services LLC)	26-keyboard and mouse for M. Wahl	08/02/2024	64.98
8658 - Kleindorfer's Hardware LLC	26-Scotch shipping tape for shipping meter supplies	08/02/2024	42.45
8658 - Kleindorfer's Hardware LLC	26-Wasp spray for meters	08/02/2024	9.49
Account **52420 - Other Supplies** Totals	Invoice Transactions 3		$116.92

Board of Public Works Claim Register

Invoice Date Range 07/20/24 - 08/02/24

Account **53150 - Communications Contract**

4264 - IPS Group, INC	26-bank fees and communication fees for March 2024		08/02/2024	9,081.25
	Account **53150 - Communications Contract** Totals	Invoice Transactions	1	$9,081.25

Account **53210 - Telephone**

13969 - AT&T Mobility II, LLC	06-cell phone chgs 06/12-07/11/24-Inv. 287289748780X07192024		07/24/2024	751.04
13969 - AT&T Mobility II, LLC	06-cell phone chgs 06/12-07/11/24-Inv. 287297421132X07192024		07/24/2024	123.06
1079 - AT&T	28-CH/off site fac-long distance chgs 07/09/2023-BAN #849494015		07/24/2024	2.95
	Account **53210 - Telephone** Totals	Invoice Transactions	3	$877.05

Account **53240 - Freight / Other**

8541 - Amazon.com Sales, INC (Amazon.com Services LLC)	26-first aid kit for parking services		08/02/2024	29.83
8002 - Safeguard Business Systems, INC	26-10,000 envelopes for customer billing and permit mailing		08/02/2024	78.59
	Account **53240 - Freight / Other** Totals	Invoice Transactions	2	$108.42

Account **53310 - Printing**

8002 - Safeguard Business Systems, INC	26-10,000 envelopes for customer billing and permit mailing		08/02/2024	464.09
	Account **53310 - Printing** Totals	Invoice Transactions	1	$464.09

Account **53830 - Bank Charges**

4264 - IPS Group, INC	26-bank fees and communication fees for March 2024		08/02/2024	4,796.22
	Account **53830 - Bank Charges** Totals	Invoice Transactions	1	$4,796.22

Account **53990 - Other Services and Charges**

4443 - The Sherwin Williams Company	26-yellow curb paint on Rogers and Morton 7th to 10th		08/02/2024	120.36

Board of Public Works Claim Register

Invoice Date Range 07/20/24 - 08/02/24

Account **53990 - Other Services and Charges** Totals			Invoice Transactions	1	$120.36
Program **260000 - Main** Totals			Invoice Transactions	16	$15,947.37
Department **26 - Parking** Totals			Invoice Transactions	16	$15,947.37
Fund **455 - Parking Meter Fund(S2141)** Totals			Invoice Transactions	16	$15,947.37

Fund **456 - MVH Restricted**

Department **20 - Street**

Program **200000 - Main**

Account **52330 - Street , Alley, and Sewer Material**

5149 - E&B Paving, INC	20-Asphalt for Paving Hollywood Dr, Staat Dr, Kerry Dr 5/30/24	BC 2023-093A	08/02/2024	27,505.07
5149 - E&B Paving, INC	20-Asphalt for Paving Meadowlark Ln., Hollywood, Staat 5/29/24	BC 2023-093A	08/02/2024	22,642.13
5149 - E&B Paving, INC	20-Asphalt for Paving Union St. 06/17/24	BC 2023-093A	08/02/2024	11,156.85
334 - Irving Materials, INC	20-Concrete for Sidewalk Projects class A stone-2204 E. Queens W	BC 2024-012	08/02/2024	736.00
334 - Irving Materials, INC	20-Concrete for Sidewalk Projects class A stone-1005 S Graywell	BC 2024-012	08/02/2024	736.00
334 - Irving Materials, INC	20-Concrete for Sidewalk Projects class A stone-1006 S Graywell	BC 2024-012	08/02/2024	108.70

Account **52330 - Street , Alley, and Sewer Material** Totals	Invoice Transactions	6	$62,884.75

Account **52420 - Other Supplies**

8541 - Amazon.com Sales, INC (Amazon.com Services LLC)	20-3 Logitech Crayon Digital pencils for Ipad (Cityworks)		08/02/2024	209.85

Account **52420 - Other Supplies** Totals	Invoice Transactions	1	$209.85
Program **200000 - Main** Totals	Invoice Transactions	7	$63,094.60
Department **20 - Street** Totals	Invoice Transactions	7	$63,094.60

Board of Public Works Claim Register

Invoice Date Range 07/20/24 - 08/02/24

		Fund **456 - MVH Restricted** Totals	Invoice Transactions	7	$63,094.60

Fund **600 - Cumulative Cap Imprv(CIG)(S2379)**

Department **02 - Public Works**

Program **020000 - Main**

Account **52330 - Street , Alley, and Sewer Material**

334 - Irving Materials, INC	20-Concrete for Sidewalk Projects class A stone-1006 S Graywell	BC 2024-012	08/02/2024	627.30
365 - Rogers Group, INC	20-INDOT #11 Stone for Street Projects 07/11/24		08/02/2024	522.10
365 - Rogers Group, INC	20-#53 Stone for Street Projects 07/01/24		08/02/2024	93.90
	Account **52330 - Street , Alley, and Sewer Material** Totals	Invoice Transactions	3	$1,243.30
	Program **020000 - Main** Totals	Invoice Transactions	3	$1,243.30
	Department **02 - Public Works** Totals	Invoice Transactions	3	$1,243.30
	Fund **600 - Cumulative Cap Imprv(CIG)(S2379)** Totals	Invoice Transactions	3	$1,243.30

Fund **601 - Cumulative Capital Devlp(S2391)**

Department **02 - Public Works**

Program **020000 - Main**

Account **52330 - Street , Alley, and Sewer Material**

5149 - E&B Paving, INC	20-Hot mix for patching 04/09/24	BC 2023-093A	08/02/2024	502.18
5149 - E&B Paving, INC	20-Hot mix for patching 05/23/24	BC 2023-093A	08/02/2024	183.26
5149 - E&B Paving, INC	20-Hot mix for patching 06/03/24	BC 2023-093A	08/02/2024	215.99
5149 - E&B Paving, INC	20-Hot mix for patching 06/04/24	BC 2023-093A	08/02/2024	366.52

5149 - E&B Paving, INC	20-Asphalt for Paving Eagleson & E. 5th 06/06/24	BC 2023-093A	08/02/2024	183.26
Account **52330 - Street , Alley, and Sewer Material** Totals		Invoice Transactions	5	$1,451.21
Account **53990 - Other Services and Charges**				
603 - Traffic Control Corporation	20-AI VIdeo Connectivity & Support Service @ 13 Signals		08/02/2024	1,625.00
Account **53990 - Other Services and Charges** Totals		Invoice Transactions	1	$1,625.00
Program **020000 - Main** Totals		Invoice Transactions	6	$3,076.21
Department **02 - Public Works** Totals		Invoice Transactions	6	$3,076.21
Department **07 - Engineering**				
Program **070000 - Main**				
Account **54310 - Improvements Other Than Building**				
10 - Bledsoe Riggert Cooper & James INC	07-Moores/SE Trail (PE) 05/31/24	BC 2022-137	08/02/2024	485.00
5149 - E&B Paving, INC	07-Morningside DR Greenway-Retainage Release	BC 2023-106	08/02/2024	.00
3444 - Rundell Ernstberger Associates, INC	07-On-Call Engineering Services, REA - thru 04/30/24	BC 2023-043	08/02/2024	12,072.00
5999 - The Etica Group, INC	07-Neighborhood Greenways, Eagle Ridge 05/01-05/31/24	BC 2024-025	08/02/2024	8,662.48
Account **54310 - Improvements Other Than Building** Totals		Invoice Transactions	4	$21,219.48
Program **070000 - Main** Totals		Invoice Transactions	4	$21,219.48
Department **07 - Engineering** Totals		Invoice Transactions	4	$21,219.48
Fund **601 - Cumulative Capital Devlp(S2391)** Totals		Invoice Transactions	10	$24,295.69
Fund **730 - Solid Waste (S6401)**				
Department **16 - Sanitation**				

Board of Public Works Claim Register

Invoice Date Range 07/20/24 - 08/02/24

Program **160000 - Main**

Account **53140 - Exterminator Services**

51538 - Economy Termite & Pest Control, INC	16-bi-monthly pest control-7/9/24	BC 2023-070	08/02/2024	125.00
	Account **53140 - Exterminator Services** Totals	Invoice Transactions 1		$125.00

Account **53150 - Communications Contract**

5465 - Emergency Radio Service LLC (ERS-OCI Wireless)	16-truck radio service-July 2024		08/02/2024	572.05
	Account **53150 - Communications Contract** Totals	Invoice Transactions 1		$572.05

Account **53210 - Telephone**

13969 - AT&T Mobility II, LLC	06-cell phone chgs 06/12-07/11/24-Inv. 287289748780X07192024		07/24/2024	41.76
13969 - AT&T Mobility II, LLC	06-cell phone chgs 06/12-07/11/24-Inv. 287297421132X07192024		07/24/2024	419.36
13969 - AT&T Mobility II, LLC	06-Unlim'td LTE Laptp/Hotspt-6/12-7/11/24-287327321618X07192024		07/24/2024	29.24
1079 - AT&T	28-CH/off site fac-long distance chgs 07/09/2023-BAN #849494015		07/24/2024	12.37
	Account **53210 - Telephone** Totals	Invoice Transactions 4		$502.73

Account **53510 - Electrical Services**

223 - Duke Energy	19-Fac Summary Elec Billing-06/04/24-07/01/2024			22.56
	Account **53510 - Electrical Services** Totals	Invoice Transactions 1		$22.56

Account **53610 - Building Repairs**

321 - Harrell Fish, INC (HFI)	16 - Replaced batteries in digital timer-6/7/24	BC 2023-074	08/02/2024	337.33
	Account **53610 - Building Repairs** Totals	Invoice Transactions 1		$337.33

Account **53920 - Laundry and Other Sanitation Services**

19171 - Vestis Group, INC (FKA Aramark)	16-Mat Services - 07/03/2024	08/02/2024	29.70
19171 - Vestis Group, INC (FKA Aramark)	16-uniform rental (minus payroll ded)-07/03/2024	08/02/2024	6.48
19171 - Vestis Group, INC (FKA Aramark)	16-uniform rental (minus payroll ded)-07/10/2024	08/02/2024	6.48
Account **53920 - Laundry and Other Sanitation Services** Totals		Invoice Transactions 3	$42.66

Account **53950 - Landfill**

52226 - Hoosier Transfer Station-3140	16-trash disposal fee-07/1-07/15/24	08/02/2024	16,725.28
52226 - Hoosier Transfer Station-3140	16-recycling fees-07/1-07/15/24	08/02/2024	900.30
Account **53950 - Landfill** Totals		Invoice Transactions 2	$17,625.58
Program **160000 - Main** Totals		Invoice Transactions 13	$19,227.91
Department **16 - Sanitation** Totals		Invoice Transactions 13	$19,227.91
Fund **730 - Solid Waste (S6401)** Totals		Invoice Transactions 13	$19,227.91

Fund **800 - Risk Management(S0203)**

Department **10 - Legal**

Program **100000 - Main**

Account **52430 - Uniforms and Tools**

8613 - Crane's Leather & Shoe Shop, INC	10-Safety Shoes-S. Blake 9.5 D-5/18/24	08/02/2024	100.00
8613 - Crane's Leather & Shoe Shop, INC	10-Safety Shoes-C. Meredith 7 M-6/17/24	08/02/2024	100.00
8613 - Crane's Leather & Shoe Shop, INC	10-Safety Shoes-A. Ridge 7M-5/25/24	08/02/2024	97.50
8613 - Crane's Leather & Shoe Shop, INC	10-Safety Shoes- Z. Rogers 10 D-5/25/24	08/02/2024	100.00
8613 - Crane's Leather & Shoe Shop, INC	10-Safety Shoes- J. Werner 11.5 D-5/18/24	08/02/2024	97.50

Board of Public Works Claim Register

Invoice Date Range 07/20/24 - 08/02/24

8613 - Crane's Leather & Shoe Shop, INC	10-Safety Shoes- T. Johnson 8.5 M-6/28/24	08/02/2024	100.00
8613 - Crane's Leather & Shoe Shop, INC	10-safety shoes-R. Sargent 8.5M-7/12/24	08/02/2024	100.00
4291 - Monroe Optical, INC	10-Safety Shoes- J. Banks 8-6/18/24	08/02/2024	100.00
4291 - Monroe Optical, INC	10-Safety Shoes- T. Brown 7.5-6/18/24	08/02/2024	100.00
1448 - Shoe Carnival, INC	10-Safety Shoes - Wolford 11.5-5/28/24	08/02/2024	99.99
1448 - Shoe Carnival, INC	10- Safety Shoes - Abbott 11-5/30/24	08/02/2024	99.98
1448 - Shoe Carnival, INC	10-Safety Shoes - Albright 9.5-5/10/24	08/02/2024	89.98
1448 - Shoe Carnival, INC	10-Safety Shoes - B. Moore 12-5/15/24	08/02/2024	99.98
1448 - Shoe Carnival, INC	10-Safety Shoes - C. Phipps 11.5-5/29/24	08/02/2024	89.99
1448 - Shoe Carnival, INC	10-Safety Shoes - C. Moore 8.5-5/15/24	08/02/2024	99.98
1448 - Shoe Carnival, INC	10- Safety Shoes - Cotter 9.5-5/9/24	08/02/2024	99.98
1448 - Shoe Carnival, INC	10-Safety Shoes - D. Carpenter 6.5-5/24/24	08/02/2024	64.98
1448 - Shoe Carnival, INC	10-Safety Shoes - E. Gough 11-5/23/24	08/02/2024	94.98
1448 - Shoe Carnival, INC	10-Safety Shoes - Ellis 9.5-5/30/24	08/02/2024	94.98
1448 - Shoe Carnival, INC	10-Safety Shoes - Foster 11-5/30/24	08/02/2024	69.98
1448 - Shoe Carnival, INC	10-Safety Shoes - Fox 13-5/15/24	08/02/2024	100.00
1448 - Shoe Carnival, INC	10-Safety Shoes - F. Love 9.5-5/26/24	08/02/2024	99.98
1448 - Shoe Carnival, INC	10-Safety Shoes - G. Goecker 11-5/20/24	08/02/2024	100.00
1448 - Shoe Carnival, INC	10-Safety Shoes - Grubb 8.5-5/30/24	08/02/2024	89.98
1448 - Shoe Carnival, INC	10-Safety Shoes - Harmon 8.5-5/31/24	08/02/2024	100.00

Board of Public Works Claim Register

Invoice Date Range 07/20/24 - 08/02/24

1448 - Shoe Carnival, INC	10-Safety Shoes - Headdy 7.5-5/29/24	08/02/2024	100.00
1448 - Shoe Carnival, INC	10-Safety Shoes - J. Seyer 10-5/25/24	08/02/2024	100.00
1448 - Shoe Carnival, INC	10-Safety Shoes - J. Prince 12-5/22/24	08/02/2024	100.00
1448 - Shoe Carnival, INC	10-Safety Shoes - Keene 8.5-5/16/24	08/02/2024	89.98
1448 - Shoe Carnival, INC	10-Safety Shoes - Lasher 9-5/13/24	08/02/2024	99.99
1448 - Shoe Carnival, INC	10-Safety Shoes - L. Ritchel 11-5/21/24	08/02/2024	64.98
1448 - Shoe Carnival, INC	10-Safety Shoes - L. Carlson 12-5/23/24	08/02/2024	99.99
1448 - Shoe Carnival, INC	10-Safety Shoes - Malicoat 12-5/24/24	08/02/2024	94.98
1448 - Shoe Carnival, INC	10-Safety Shoes - M. Dowd 14-5/23/24	08/02/2024	100.00
1448 - Shoe Carnival, INC	10-Safety Shoes - Martin 10-5/18/24	08/02/2024	89.98
1448 - Shoe Carnival, INC	10-Safety Shoes - McIntire 9.5-5/16/24	08/02/2024	99.98
1448 - Shoe Carnival, INC	10-Safety Shoes - Richey 12-5/13/24	08/02/2024	94.98
1448 - Shoe Carnival, INC	10-Safety Shoes - Rodriguez 6-5/6/24	08/02/2024	99.98
1448 - Shoe Carnival, INC	10-Safety Shoes - Schneck 10.5-5/27/24	08/02/2024	94.98
1448 - Shoe Carnival, INC	10-Safety Shoes - Shearer 8-5/15/24	08/02/2024	99.98
1448 - Shoe Carnival, INC	10-Safety Shoes - Sowders 11-5/18/24	08/02/2024	99.99
1448 - Shoe Carnival, INC	10-Safety Shoes - Sturrock 12-5/30/24	08/02/2024	100.00
1448 - Shoe Carnival, INC	10-Safety Shoes - Vickery 11-5/15/24	08/02/2024	100.00
1448 - Shoe Carnival, INC	10-Safety Shoes - Z. Mayfield 8-5/22/24	08/02/2024	59.98
453 - ULINE, INC	10-Equipment for Encampment Clean Ups	08/02/2024	1,954.18

Board of Public Works Claim Register

Invoice Date Range 07/20/24 - 08/02/24

Account **52430 - Uniforms and Tools** Totals	Invoice Transactions	45	$6,133.71
Program **100000 - Main** Totals	Invoice Transactions	45	$6,133.71
Department **10 - Legal** Totals	Invoice Transactions	45	$6,133.71
Fund **800 - Risk Management(S0203)** Totals	Invoice Transactions	45	$6,133.71

Fund **801 - Health Insurance Trust**

Department **12 - Human Resources**

Program **120000 - Main**

Account **53990.1201 - Other Services and Charges Health Insurance**

9375 - WEX Health INC (Chard, Snyder & Associates)	12-July 2024 Wellness Reimbursements	07/22/2024	2,267.00

Account **53990.1201 - Other Services and Charges Health Insurance** Totals	Invoice Transactions	1	$2,267.00
Program **120000 - Main** Totals	Invoice Transactions	1	$2,267.00
Department **12 - Human Resources** Totals	Invoice Transactions	1	$2,267.00
Fund **801 - Health Insurance Trust** Totals	Invoice Transactions	1	$2,267.00

Fund **802 - Fleet Maintenance(S9500)**

Department **17 - Fleet Maintenance**

Program **170000 - Main**

Account **52230 - Garage and Motor Supplies**

50605 - Bauer Built, INC	17 - tires for stock - 7/10/24	08/02/2024	1,711.92
50605 - Bauer Built, INC	17 -assortment of tires refurbished	08/02/2024	3,416.06
50605 - Bauer Built, INC	17 - tires for stock - 7/10/24	08/02/2024	6,609.67

Board of Public Works Claim Register

Invoice Date Range 07/20/24 - 08/02/24

4693 - Monroe County Tire & Supply, INC	17 - F'stone Bias tube TR13 for 668		08/02/2024	30.00
4693 - Monroe County Tire & Supply, INC	17 - F'stone firehawk tire for 1701		08/02/2024	106.30
4693 - Monroe County Tire & Supply, INC	17 - (2) F'Stone all season tires for 245		08/02/2024	249.46
4693 - Monroe County Tire & Supply, INC	17 - (2) F'stone transforce tires for 845		08/02/2024	302.02
	Account **52230 - Garage and Motor Supplies** Totals	Invoice Transactions 7		$12,425.43

Account **52240 - Fuel and Oil**

7854 - Premier AG CO-OP, INC (Premier Energy)	17-fuel-B20 PDX4 Clear on Road (7,339 gallons)-7/12/24	BC 2023-105B	08/02/2024	23,299.86
	Account **52240 - Fuel and Oil** Totals	Invoice Transactions 1		$23,299.86

Account **52320 - Motor Vehicle Repair**

1107 - Best Equipment Company, INC	17 - #508 gutter brooms (2)		08/02/2024	651.00
244 - Bloomington Ford, INC	17 - Gasket for 638		08/02/2024	18.62
244 - Bloomington Ford, INC	17 - Clamp for 638		08/02/2024	27.50
244 - Bloomington Ford, INC	17 - Crown Vic Oil fill cap for C115		08/02/2024	6.64
244 - Bloomington Ford, INC	17 - Socket assembly for 531		08/02/2024	12.50
244 - Bloomington Ford, INC	17 - Wheel bolt & nut for 461		08/02/2024	15.43
244 - Bloomington Ford, INC	17 - Door handle assembly for 246		08/02/2024	49.02
244 - Bloomington Ford, INC	17 - Fuel door for D160		08/02/2024	53.85
244 - Bloomington Ford, INC	17 -windshield/turn signal switch for 511		08/02/2024	60.41
244 - Bloomington Ford, INC	17 - windshield/turn signal switch for inventory		08/02/2024	60.41
244 - Bloomington Ford, INC	17 - #679 oil filter change service		08/02/2024	34.09

Board of Public Works Claim Register

Invoice Date Range 07/20/24 - 08/02/24

244 - Bloomington Ford, INC	17 - selector shaft assembly for 126	08/02/2024	163.75
244 - Bloomington Ford, INC	17 - link, turbine sensor, 2-V-belt for parks minibus (848)	08/02/2024	185.28
244 - Bloomington Ford, INC	17 - #612 parts and labor for tire issues	08/02/2024	26.25
244 - Bloomington Ford, INC	17 - power steering pump assembly & power steering pump for 243	08/02/2024	250.00
244 - Bloomington Ford, INC	17 - Shock absorber assemblies for 874	08/02/2024	352.10
244 - Bloomington Ford, INC	17 - Reservoir Assembly for stock	08/02/2024	358.75
244 - Bloomington Ford, INC	17 - #327 parts and labor for diagnostic work	08/02/2024	26.25
244 - Bloomington Ford, INC	17 - Drive shaft Assembly, bolts, screws and washer for 259	08/02/2024	599.55
244 - Bloomington Ford, INC	17 - door lock module for 511	08/02/2024	640.91
244 - Bloomington Ford, INC	17 - socket assembly for 318	08/02/2024	693.50
244 - Bloomington Ford, INC	17 - #690 parts and labor to repair AC	08/02/2024	2,225.14
244 - Bloomington Ford, INC	17 - TPMS Sensor kit for 244	08/02/2024	62.72
244 - Bloomington Ford, INC	17 - credit for core charges-Inv #5083866	08/02/2024	(70.00)
244 - Bloomington Ford, INC	17-credit-returned Shock absorber assemblies-Inv #5083935	08/02/2024	(183.00)
594 - Curry Auto Center, INC	17 - SL-N-Hose for 764	08/02/2024	40.70
594 - Curry Auto Center, INC	17 - SL-N-Sensor for 764	08/02/2024	282.32
4387 - Force America Distributing, LLC	17 - #4861 parts for salt spreader and PTO & freight charges	08/02/2024	10,776.84
455 - Industrial Service & Supply, INC	17 - (2) Male connector Flare fitting &(2) JIC to Male BSPP 90 D	08/02/2024	70.12
455 - Industrial Service & Supply, INC	17 - Stainless Steel hose, crimp charge, Ferrule, female JIC	08/02/2024	171.13
796 - Interstate Battery System of Bloomington, INC	17 - (2) MTP-48/H6 batteries for 922	08/02/2024	244.72

Board of Public Works Claim Register

Invoice Date Range 07/20/24 - 08/02/24

796 - Interstate Battery System of Bloomington, INC	17 - batteries -31 MHD, MT-34	08/02/2024	555.00
908 - JB Salvage (Westside Auto Parts)	17 - #579 steel for repair-7/9/24	08/02/2024	25.00
4439 - JX Enterprises, INC	17 - Hub assembly for 956	08/02/2024	466.99
4439 - JX Enterprises, INC	17 - Clutch -Fan k32 Steel for 956	08/02/2024	499.99
2974 - MacAllister Machinery Co, INC	17 - Fuel filter and kit seal for 606	08/02/2024	41.06
2974 - MacAllister Machinery Co, INC	17 - Filters for 606	08/02/2024	73.37
2974 - MacAllister Machinery Co, INC	17 - AS-F Element & HYD Element for 606	08/02/2024	113.44
2974 - MacAllister Machinery Co, INC	17 - Pad for 4591	08/02/2024	445.65
2974 - MacAllister Machinery Co, INC	17 - 95 pads	08/02/2024	8,467.35
53385 - O'Reilly Automotive Stores, INC	17 - Brushes & 3 pc wire brush for 638	08/02/2024	12.98
53385 - O'Reilly Automotive Stores, INC	17 - (2) Valve cleaner for 638	08/02/2024	25.98
53385 - O'Reilly Automotive Stores, INC	17 - (2) Valve cleaner for 638	08/02/2024	25.98
53385 - O'Reilly Automotive Stores, INC	17 - (2) hoses for 297	08/02/2024	104.09
53385 - O'Reilly Automotive Stores, INC	17 - O2 sensor, Belt tensner & Micro-V Belt for P133 MS	08/02/2024	114.09
53385 - O'Reilly Automotive Stores, INC	17 - Intercooler Tube for 631	08/02/2024	177.14
16069 - Palmer Trucks, INC	17 - seal for 678	08/02/2024	22.34
16069 - Palmer Trucks, INC	17 - Spacer for #773	08/02/2024	30.30
16069 - Palmer Trucks, INC	17 - Seal & gasket for #678	08/02/2024	45.75
54351 - Sternberg, INC	17 - Quick released valve for 956	08/02/2024	42.13
54351 - Sternberg, INC	17 - Sensor for 425	08/02/2024	183.91

Board of Public Works Claim Register

Invoice Date Range 07/20/24 - 08/02/24

54351 - Sternberg, INC	17 - Brake drums & shoe kit for 963	08/02/2024	577.94
54351 - Sternberg, INC	17 - Dos Fluid Supply Module for 438	08/02/2024	600.16
54351 - Sternberg, INC	17 - Air dryer assembly for inventory	08/02/2024	662.38
54351 - Sternberg, INC	17 - Exhaust kit and sensor for 425	08/02/2024	1,347.30
54351 - Sternberg, INC	17 - credit for core returned	08/02/2024	(250.00)
582 - Town & Country Chrysler Dodge Jeep, INC	17 - Coolant Recovery Bottle for 1224	08/02/2024	135.15
7555 - VoMac Truck Sales & Service INC	17 - Heater fan for 962	08/02/2024	297.72
2096 - West Side Tractor Sales CO.	17 - Filter element F7 & Filter Element V12T for 467	08/02/2024	127.83
2096 - West Side Tractor Sales CO.	17 - Bolt & washer for 783	08/02/2024	129.00
2096 - West Side Tractor Sales CO.	17 - Filter element F&, Filter element C8, oil filter A4 & Seal	08/02/2024	145.86
2096 - West Side Tractor Sales CO.	17 - Belt tensioner & V-Belt for 864	08/02/2024	265.53
2096 - West Side Tractor Sales CO.	17 - Fan drive bearing for 864	08/02/2024	276.22
2096 - West Side Tractor Sales CO.	17 - Rearview Mirror & Lamp for 607	08/02/2024	343.71
2096 - West Side Tractor Sales CO.	17 - Cutting Edge, bolt, washer, 5/8 Nut for 625	08/02/2024	362.52
2096 - West Side Tractor Sales CO.	17 - #624 parts and labor to repair AC-6/5/24	08/02/2024	117.87
2096 - West Side Tractor Sales CO.	17 - #730 parts and labor for repairs-5/3/24	08/02/2024	733.83
2096 - West Side Tractor Sales CO.	17 - universal drive, washer, lock nuts, oil pan gasket for 625	08/02/2024	5,909.59
8183 - XL Parts LLC (XL Parts/Dealer Service Warehouse)	17 - TPMS sensor kit for 402	08/02/2024	60.46
8183 - XL Parts LLC (XL Parts/Dealer Service Warehouse)	17 - Valve Assembly & CV Axle for P138	08/02/2024	202.32
8183 - XL Parts LLC (XL Parts/Dealer Service Warehouse)	17 - TPMS Sensor kit for 665	08/02/2024	241.84

Board of Public Works Claim Register

Invoice Date Range 07/20/24 - 08/02/24

	Account **52320 - Motor Vehicle Repair** Totals	Invoice Transactions 71		$41,666.27
Account **52420 - Other Supplies**				
8658 - Kleindorfer's Hardware LLC	17 - (6) grommet for fleet		08/02/2024	8.34
8658 - Kleindorfer's Hardware LLC	17 - 45 degree brass, brass, beam clamps, rubber washers		08/02/2024	47.44
8658 - Kleindorfer's Hardware LLC	17 - pads, ss hose clamp, 90degree bar for fleet		08/02/2024	56.56
8181 - Lawson Products, INC	17 - misc parts and shop supplies - 6/24/2024		08/02/2024	1,171.29
337 - Stansifer Radio Co, INC	17 - Comp-33 Dantona battery for shop		08/02/2024	3.96
	Account **52420 - Other Supplies** Totals	Invoice Transactions 5		$1,287.59
Account **53140 - Exterminator Services**				
51538 - Economy Termite & Pest Control, INC	17-monthly pest control-7/16/24	BC 2023-070	08/02/2024	95.00
	Account **53140 - Exterminator Services** Totals	Invoice Transactions 1		$95.00
Account **53210 - Telephone**				
13969 - AT&T Mobility II, LLC	06-cell phone chgs 06/12-07/11/24-Inv. 287289748780X07192024		07/24/2024	43.18
13969 - AT&T Mobility II, LLC	06-Unlim'td LTE Laptp/Hotspt-6/12-7/11/24-287327321618X07192024		07/24/2024	29.24
1079 - AT&T	28-CH/off site fac-long distance chgs 07/09/2023-BAN #849494015		07/24/2024	5.42
	Account **53210 - Telephone** Totals	Invoice Transactions 3		$77.84
Account **53240 - Freight / Other**				
4387 - Force America Distributing, LLC	17 - #4861 parts for salt spreader and PTO & freight charges		08/02/2024	174.21
	Account **53240 - Freight / Other** Totals	Invoice Transactions 1		$174.21
Account **53510 - Electrical Services**				

Board of Public Works Claim Register

Invoice Date Range 07/20/24 - 08/02/24

223 - Duke Energy	19-Fac Summary Elec Billing-06/04/24-07/01/2024			24.55
	Account **53510 - Electrical Services** Totals	Invoice Transactions	1	$24.55
Account **53620 - Motor Repairs**				
244 - Bloomington Ford, INC	17 - #679 oil filter change service	08/02/2024		28.00
244 - Bloomington Ford, INC	17 - #612 parts and labor for tire issues	08/02/2024		175.00
244 - Bloomington Ford, INC	17 - #327 parts and labor for diagnostic work	08/02/2024		350.00
244 - Bloomington Ford, INC	17 - #690 parts and labor to repair AC	08/02/2024		2,660.00
4474 - Ken's Westside Service & Towing, LLC	17 - Tow Unit #127-7/2/24	08/02/2024		120.00
4474 - Ken's Westside Service & Towing, LLC	17 - Tow bill for M2 trash truck lug nuts missing on rear tire.	08/02/2024		341.28
4474 - Ken's Westside Service & Towing, LLC	17 - Tow for Unit #30 from city garage to fleet, would not start	08/02/2024		362.50
54351 - Sternberg, INC	17 - #956 diagnostic services	08/02/2024		338.00
582 - Town & Country Chrysler Dodge Jeep, INC	17 - #1206 Diagnostic work-perform 16 point vehicle inspection	08/02/2024		94.67
2096 - West Side Tractor Sales CO.	17 - #624 diagnostic work-6/10/24	08/02/2024		629.70
2096 - West Side Tractor Sales CO.	17 - #624 parts and labor to repair AC-6/5/24	08/02/2024		749.47
2096 - West Side Tractor Sales CO.	17 - #730 parts and labor for repairs-5/3/24	08/02/2024		2,076.80
	Account **53620 - Motor Repairs** Totals	Invoice Transactions	12	$7,925.42
Account **53640 - Hardware and Software Maintenance**				
3286 - Peacetree, INC (PEI Maintenance)	17 - service agreement for fuel master for Adams & Henderson ST	08/02/2024		2,790.00
53954 - Ron Turley Associates, INC	17 - Annnual agreement for RTA software-9/1/24-8/31/25	08/02/2024		12,180.00
	Account **53640 - Hardware and Software Maintenance** Totals	Invoice Transactions	2	$14,970.00

Board of Public Works Claim Register

Invoice Date Range 07/20/24 - 08/02/24

Account **53920 - Laundry and Other Sanitation Services**

19171 - Vestis Group, INC (FKA Aramark)	17 - City portion Of uniform rentals - 7/03/2024	08/02/2024	26.87
19171 - Vestis Group, INC (FKA Aramark)	17 - City portion Of uniform rentals - 7/10/2024	08/02/2024	26.87
19171 - Vestis Group, INC (FKA Aramark)	17 - mat rentals and shop towels- 7/10/2024	08/02/2024	93.35
19171 - Vestis Group, INC (FKA Aramark)	17 - mat rentals and shop towels- 7/3/2024	08/02/2024	93.35

Account **53920 - Laundry and Other Sanitation Services** Totals — Invoice Transactions 4 — $240.44

Program **170000 - Main** Totals — Invoice Transactions 108 — $102,186.61

Department **17 - Fleet Maintenance** Totals — Invoice Transactions 108 — $102,186.61

Fund **802 - Fleet Maintenance(S9500)** Totals — Invoice Transactions 108 — $102,186.61

Fund **804 - Insurance Voluntary Trust**

Department **12 - Human Resources**

Program **120000 - Main**

Account **53990.1271 - Other Services and Charges Section 125 - URM- City**

17785 - The Howard E. Nyhart Company, INC	12-City/Util URM	07/22/2024	91.00
17785 - The Howard E. Nyhart Company, INC	12-City URM	07/22/2024	75.00
17785 - The Howard E. Nyhart Company, INC	12-City URM	07/23/2024	7.01
17785 - The Howard E. Nyhart Company, INC	12-City URM		180.96
17785 - The Howard E. Nyhart Company, INC	12-City URM		285.00

Account **53990.1271 - Other Services and Charges Section 125 - URM- City** Totals — Invoice Transactions 5 — $638.97

Account **53990.1281 - Other Services and Charges Section 125 - URM- Util**

Board of Public Works Claim Register

Invoice Date Range 07/20/24 - 08/02/24

17785 - The Howard E. Nyhart Company, INC	12-City/Util URM			07/22/2024	101.00
17785 - The Howard E. Nyhart Company, INC	12-Util URM			07/22/2024	165.90
Account **53990.1281 - Other Services and Charges Section 125 - URM- Util** Totals			Invoice Transactions	2	$266.90
Program **120000 - Main** Totals			Invoice Transactions	7	$905.87
Department **12 - Human Resources** Totals			Invoice Transactions	7	$905.87
Fund **804 - Insurance Voluntary Trust** Totals			Invoice Transactions	7	$905.87
Fund **978 - City 2016 GO Bond Proceeds**					
Department **06 - Controller's Office**					
Program **06016G - 2016 G Sanitation Carts**					
Account **54510 - Other Capital Outlays**					
5697 - Cascade Engineering, INC	16-trash can lids (100)			08/02/2024	1,325.00
Account **54510 - Other Capital Outlays** Totals			Invoice Transactions	1	$1,325.00
Program **06016G - 2016 G Sanitation Carts** Totals			Invoice Transactions	1	$1,325.00
Department **06 - Controller's Office** Totals			Invoice Transactions	1	$1,325.00
Fund **978 - City 2016 GO Bond Proceeds** Totals			Invoice Transactions	1	$1,325.00
Fund **986 - GO Bonds 2022**					
Department **06 - Controller's Office**					
Program **060000 - Main**					
Account **54510 - Other Capital Outlays**					
16 - Butler, Fairman & Seufert, INC	07-High Street Multiuse Path and Intersections 05/01/24-05/31/24	BC 2024-041		08/02/2024	30,572.00

Board of Public Works Claim Register

Invoice Date Range 07/20/24 - 08/02/24

	Account **54510 - Other Capital Outlays** Totals		Invoice Transactions	1	$30,572.00
	Program **060000 - Main** Totals		Invoice Transactions	1	$30,572.00
	Department **06 - Controller's Office** Totals		Invoice Transactions	1	$30,572.00
	Fund **986 - GO Bonds 2022** Totals		Invoice Transactions	1	$30,572.00

Fund **987 - Econ Dev LIT Bonds of 2022**

Department **06 - Controller's Office**

Program **08FIR1 - Fire Station 1**

Account **54510 - Other Capital Outlays**

3903 - Electric Plus, INC	08-FS#1 Construction Project-Pay App #6	BC 2023-081	08/02/2024	90,872.16
10745 - Fox Construction Company, INC	08-FS#1 Construction Project-Pay App #7	BC 2023-078	08/02/2024	112,283.18
Account **54510 - Other Capital Outlays** Totals		Invoice Transactions	2	$203,155.34
Program **08FIR1 - Fire Station 1** Totals		Invoice Transactions	2	$203,155.34

Program **08FIR3 - Fire Station 3**

Account **54510 - Other Capital Outlays**

6985 - Martin Riley, INC	08-Construction Documents-Station 3 Add'n & Renovation-6/30/24	BC 2023-022	08/02/2024	63,440.00
5900 - VET Environmental Engineering, LLC	08-Fire Station 3 Asbestos testing -5/8-5/20/24		08/02/2024	1,765.45
Account **54510 - Other Capital Outlays** Totals		Invoice Transactions	2	$65,205.45
Program **08FIR3 - Fire Station 3** Totals		Invoice Transactions	2	$65,205.45

Program **08FIRA - Fire Shower's West**

Account **54510 - Other Capital Outlays**

Board of Public Works Claim Register

Invoice Date Range 07/20/24 - 08/02/24

9300 - Huston Electric Holding CORP (Cassady Electric)	08-Lighting repair at future BFD admin ste at Showers West-4/23		08/02/2024	285.00
9300 - Huston Electric Holding CORP (Cassady Electric)	8-add new recep in kitchen at new BFD admin ste @Showers West		08/02/2024	1,400.71
293 - J&S Locksmith Shop, INC	08-Locks-offices in BFD future office-Showers West		08/02/2024	363.70
	Account **54510 - Other Capital Outlays** Totals	Invoice Transactions	3	$2,049.41
	Program **08FIRA - Fire Shower's West** Totals	Invoice Transactions	3	$2,049.41
	Department **06 - Controller's Office** Totals	Invoice Transactions	7	$270,410.20
	Fund **987 - Econ Dev LIT Bonds of 2022** Totals	Invoice Transactions	7	$270,410.20
	Grand Totals	Invoice Transactions	486	$2,568,961.66