PUBLIC HEARING
BOARD OF HOUSING QUALITY APPEALS
CITY HALL McCLOSKEY CONFERENCE ROOM
July 19, 2017, 4:00 P.M.

ALL ITEMS ARE ON THE CONSENT AGENDA

I. **ROLL CALL**

II. **REVIEW OF SUMMARY** – May 31, 2017 (included), June 21, 2017 (not included)

III. **PETITIONS**

1) 17-RV-93, **421 S. Woodlawn Avenue**, H.A.N.D (Larry McConnaughy). Request for rescission of a variance.

2) 17-RV-94, **811-817 S. Rogers Street**, H.A.N.D. (Nancy Shaw). Request for rescission of a variance.

3) 17-RV-95, **1631 S. Olive Street**, H.A.N.D. (Shapur Achaemenian). Request for rescission of a variance.

4) 17-TV-96, **910 S. Dunn Street**, Cheryl Underwood (John S. Mason). Request for an extension of time to complete repairs.

5) 17-RV-97 **1208 W. Kirkwood Avenue**, H.A.N.D. (Joseph Christine, LLC). Request for an extension of time to complete repairs.

6) 17-TV-98, **501 E. 1st Street**, Millham Realty, Inc. Request for an extension of time to complete repairs.

7) 17-TV-99, **2615 E. Dekist Street**, Ann Krielkamp. Request for an extension of time to complete repairs.

8) 17-RV-100, **752 S. Walnut Street**, H.A.N.D. (Alfred Jacobson). Request for rescission of a variance.

9) 17-RV-101, **754 S. Walnut Street**, H.A.N.D. (Alfred Jacobson). Request for rescission of a variance.

10) 17-TV-102, **1818 S. Maxwell Street**, Cynthia Hogan. Request for an extension of time to complete repairs.

11) 17-TV-103, **1004 W. Kirkwood Avenue**, Richard & Teresa Groomer. Request for an extension of time to complete repairs.

12) 17-RV-104, **1955 N. College Avenue**, H.A.N.D. (Burnham Rentals). Request for rescission of a variance.

13) 17-RV-105, **1401-1403 S. Washington Street**, H.A.N.D. (Juris Vitols). Request for rescission of a variance.

14) 17-TV-106, **125 E. 10th Street**, Michael Ho (Mary Friedman). Request for an extension of time to complete repairs.

15) 17-TV-107, **2708 S. Rogers Street**, Kelly Harding. Request for an extension of time to complete repairs.

16) 17-TV-108, **721 N. Fairview Street**, Jane Klausmeier. Request for an extension of time to complete repairs.

17) 17-TV-109, **522 S. Mitchell Street**, Orion Property Management (Erik Grotness). Request for an extension of time to complete repairs.

18) 17-RV-110, **315 N. Roosevelt Street**, H.A.N.D. (Chun-Fang B. Hahn). Request for rescission of a variance.

19) 17-TV-111, **907 W. Kirkwood Avenue**, Edna Morrison. Request for an extension of time to complete repairs.

20) 17-AA-112, **1201 W. Green Tree Lane**, Peter Jones. Request for relief from an administrative decision.

21) 17-TV-113, **1308 N. Dunn Street**, Ronnie Hanson. Request for an extension of time to complete repairs.

IV. **GENERAL DISCUSSION**

V. **PUBLIC COMMENT**

VI. **ADJOURNMENT**

Auxiliary aids for people with disabilities are available upon request with adequate notice. Please call 812-349-3429 or e-mail human.rights@bloomington.in.gov.

B.H.Q.A. MEETING OF MAY 31, 2017
SUMMARY

MEMBERS PRESENT: Nicholas Carder, Elizabeth Gallman, Nikki Gastineau, Andrew Guenther, Susie Hamilton, Maria McCormick

STAFF PRESENT: Michael Arnold, Daniel Bixler, John Hewett, Kenny Liford, Norman Mosier, Eric Sader (HAND), Christopher Wheeler (Legal)

GUESTS: Brittany Herringshaw, Rachel Parks (Copper Beech Townhome Twelve, LLC), Tamika Smith (Crescent Pointe Community)

Meeting start time 4:05 PM.

I. REVIEW OF SUMMARY

Hamilton made a motion to approve the minutes for March 15, 2017. Guenther seconded. Motion passed, 6-0.

II. CONSENT AGENDA

15-TV-241, **700 N. Washington Street**, Triple Double, LLC (Sarge Rentals). Previously heard November 18, 2015 and September 21, 2016. Request for an extension of time to complete repairs. Staff recommendation to grant the request with a July 19, 2017 deadline to complete repairs and schedule the reinspection.

17-RV-51, **841-843 S. Park Square Drive**, H.A.N.D. (Brandon Duncan). Request for rescission of a variance. Staff recommendation to grant the rescission.

17-RV-52, **2600 E. Dekist Street**, H.A.N.D. (Cedarview Management). Request for rescission of a variance. Staff recommendation to grant the rescission.

17-TV-53, **404 W. Kirkwood Avenue**, Gabriel Maupowe-Ramirez (Bloomington Co-operative Living). Request for an extension of time to complete repairs. Staff recommendation to grant the request with a June 15, 2017 deadline for all life-safety violations and a July 05, 2017 deadline for all other violations.

17-RV-54, **323 S. Jordan Avenue**, H.A.N.D. (Frank Hrisomalos Estate). Request for rescission of a variance. Staff recommendation to grant the rescission.

17-RV-55, **420 ½ W. 2nd Street**, H.A.N.D. (Prasoon Samaddar). Request for rescission of a variance. Staff recommendation to grant the rescission.

17-RV-56, **417 N. Grant Street**, H.A.N.D. (JDPHD Investment Group, LLC). Request for rescission of a variance. Staff recommendation to grant the rescission.

17-RV-57, **219 S. Maple Street**, H.A.N.D. (Elizabeth Hamlin). Request for rescission of a variance. Staff recommendation to grant the rescission.

17-TV-58, **108 E. Vermilya Avenue**, Linda Braunlin. Request for an extension of time to complete repairs. Staff recommendation to grant the request with a June 19, 2017 deadline.

17-RV-59, **404 W. 6th Street**, H.A.N.D. (CJ Satellite, LLC). Request for rescission of a variance. Staff recommendation to grant the rescission.

17-RV-60, **413 S. Henderson Street**, H.A.N.D. (JDPHD Investment Group, LLC). Request for rescission of a variance. Staff recommendation to grant the rescission.

17-TV-61, **1105 S. Rogers Street**, Jim Gronquist. Request for an extension of time to complete repairs. Staff recommendation to deny the request.

17-RV-62, **1119 N. Lincoln Street**, H.A.N.D. (Jan Elkins). Request for rescission of a variance. Staff recommendation to grant the rescission.

17-RV-63, **111-111 ½ E. Wylie Street**, H.A.N.D. (Eric Kinney). Request for rescission of a variance. Staff recommendation to grant the rescission.

17-RV-64, **1331 E. Atwater Avenue**, H.A.N.D. (Charles & Sue Sinn, Sr.). Request for rescission of a variance. Staff recommendation to grant the rescission.

17-TV-65, **1579 S. Renwick Boulevard**, City Flats at Renwick (J.C. Hart Company). Request for an extension of time to complete repairs. Staff recommendation to grant the request with an August 17, 2017 deadline.

17-RV-66, **601 W. Kirkwood Avenue**, H.A.N.D. (Terry Morgan). Request for rescission of a variance. Staff recommendation to grant the rescission.

17-RV-67, **1890 S. Walnut Street**, H.A.N.D. (Robert Tamborrino). Request for rescission of a variance. Staff recommendation to grant the rescission.
17-TV-68, **208 E. 10th Street**, Dan Fierst (Roger Fierst). Request for an extension of time to complete repairs. Staff recommendation to grant the request with a July 17, 2017 deadline.
17-TV-69, **1890 S. Walnut Street**, Robert Tamborrino (A-1 Townhomes & Apartments, LLC). Request for an extension of time to complete repairs. Staff recommendation to grant the request with a June 17, 2017 deadline for all life-safety violations and an August 17, 2017 deadline for all other violations.
17-RV-71, **1113 N. Indiana Avenue**, H.A.N.D. (Triple Double, LLC). Request for rescission of a variance. Staff recommendation to grant the rescission.
17-RV-72, **917-917 ½ N. Fairview Street**, H.A.N.D. (Jon C. Peters). Request for rescission of a variance. Staff recommendation to grant the rescission.
17-TV-73, **800 N. Smith Road**, Tiba S. Walter (Regency Consolidated Residential, LLC). Request for an extension of time to complete repairs. Staff recommendation to grant the request with a June 16, 2017 deadline to call and schedule the reinspection.
17-RV-74, **635 N. Monroe Street**, H.A.N.D. (Larry Williams). Request for rescission of a variance. Staff recommendation to grant the rescission.
17-RV-75, **107 S. Bryan Avenue**, H.A.N.D. (Cadjon Properties). Request for rescission of a variance. Staff recommendation to grant the rescission.
17-RV-76, **315 E. 15th Street**, H.A.N.D. (Reza Kaffash). Request for rescission of a variance. Staff recommendation to grant the rescission.
Approved.

III. PETITIONS

16-TV-231, **915 S. Basswood Circle**, Brittany Herringshaw (Copper Beech Townhome Twelve, LLC). Previously heard November 16, 2016. Petitioners present to request an extension of time to complete repairs. Staff recommendation to grant the request with a June 30, 2017 deadline to call and schedule the reinspection. Hamilton made motion to grant the request per staff recommendation. Guenther seconded. Motion passed, 6-0.

17-AA-70, **Crescent Pointe**, Crescent Pointe Homes (Crestline Communities). Petitioner was present to request relief from an administrative decision concerning assessment of fines for failure to provide documentation. Staff recommendation to reduce the amount by assessing one-half the price of the fines with the condition that fees be paid within 30 days of the meeting, or by June 30, 2017, or the full amount shall be assessed. Hamilton made motion to reduce the amount by assessing one-quarter the price of the fines with the condition that fees be paid within 30 days of the meeting, or by June 30, 2017, or the full amount shall be assessed. Guenther seconded. Motion failed, 2-4 (Carder, Gallman, Gastineau, McCormick nay). Carder made motion to assess full amount of the fines with the condition that fees be paid within 30 days of the meeting. McCormick seconded. Motion failed, 2-4 (Gallman, Gastineau, Guenther, Hamilton nay). Gallman made motion to accept staff recommendation to reduce the amount by assessing one-half the price of the fines with the condition that fees be paid within 30 days of the meeting, or by June 30, 2017, or the full amount shall be assessed. Guenther seconded. Motion passed, 4-1-0 (McCormick nay, Carder abstain).

16-TV-207, **120 S. Kingston Drive**, David Bilfeld (Mick Hix). Previously heard October 19, 2016. Petitioners not present to request an extension of time to complete repairs. Staff recommendation to deny the request. Gastineau made motion to deny the request per staff recommendation. Guenther seconded. Motion passed, 6-0. Request denied.

IV. GENERAL DISCUSSION

None.

V. PUBLIC COMMENT

None.

VI. ADJOURNMENT

Guenther made motion to adjourn. Carder seconded. Motion unanimously passed. Meeting adjourned at 4:45 PM.

City of Bloomington
H.A.N.D.

Board of Housing Quality Appeals
Staff Report: Petition to Rescind Variance

Meeting Date:	July 19, 2017
Petition Type:	Rescind a variance.
Petition Number:	17-RV-93
Address:	421 S. Woodlawn Ave.
Petitioner:	HAND
Inspector:	Norman Mosier
Staff Report:	January 11, 2017 – Conducted Cycle Inspection March 17, 2017 – Owner Scheduled Re-inspection on 05/22/2017 @ 1:30 May 22, 2017 - Conducted Re-inspection with owner.

This property was previously granted a variance to the bathroom ventilation requirements of the Property Maintenance Code. The Residential Rental and Lodging Establishment Inspection Program does not include a bathroom ventilation requirement and the Building Code in place at the time of construction did not address bathroom ventilation; therefore we are asking the Board to rescind this variance. This structure was built in 1920.

Staff Recommendation: Rescind the variance.

Conditions: None

Attachments: None

City of Bloomington
H.A.N.D.

Board of Housing Quality Appeals
Staff Report: Petition to Rescind Variance

Meeting Date:	July 19, 2017
Petition Type:	Rescind a variance.
Petition Number:	17-RV-94
Address:	811-817 S. Rogers St.
Petitioner:	HAND
Inspector:	Norman Mosier
Staff Report:	May 24, 2017 – Conducted Cycle Inspection May 25, 2017 – Received BHQA Appeal

This property was previously granted a variance to the bathroom ventilation requirements of the Property Maintenance Code. The Residential Rental and Lodging Establishment Inspection Program does not include a bathroom ventilation requirement and the Building Code in place at the time of construction did not address bathroom ventilation; therefore we are asking the Board to rescind this variance. This structure was built in 1925

Staff Recommendation: Rescind the variance.

Conditions: None

Attachments: None

City of Bloomington
H.A.N.D.

Board of Housing Quality Appeals
Staff Report: Petition to Rescind Variance

Meeting Date:	July 19th, 2017	
Petition Type:	Rescind a variance	
Petition Number:	17-RV-95	
Address:	1631 S Olive St.	
Petitioner:	HAND	
Inspector:	Kenny Liford	
Staff Report:	April 10th, 2017	Cycle Inspection
	May 26th, 2017	Appeal Filed

This property was previously granted a variance to the minimum ventilation requirements of the Property Maintenance Code. The Residential Rental and Lodging Establishment Inspection Program does not include a minimum ventilation requirement and the Building Code in place at the time of construction did not address minimum ventilations; therefore we are asking the Board to rescind this variance. The structure was built in 1930.

Staff Recommendation: Rescind the variance.

Conditions: None

Attachments: None

City of Bloomington
H.A.N.D.

Board of Housing Quality Appeals
Staff Report: Petition for Extension of Time

Meeting Date:	July 19, 2017
Petition Type:	An extension of time to complete repairs
Petition Number:	17-TV-96
Address:	910 S. Dunn ST
Petitioner:	Cheryl Underwood
Inspector:	Dee Wills
Staff Report:	November 07, 2016 Completed Cycle Inspection March 02, 2017 Completed Re-Inspection. Violations remain April 04, 2017 City Legal action is started for noncompliance April 11, 2017 Legal Letter sent to owner April 21, 2017 Documentation from a structural engineer (Kevin Potter) was presented to the City Legal Department stating that the garage on this property is not structurally sound May 01, 2017 The same documentation from structural engineer (Kevin Potter) was presented to the HAND office. May 02, 2017 Owner/ agent were advised to file for an Extension of Time with the HAND department May 18, 2017 City Legal Department was notified and updated May 30, 2017 Received Application for Appeal The petitioner is requesting an extension of time for the repairs needed to rebuild the existing garage. The owner has had a structural engineer inspect the garage and is willing to repair the garage to the specifications stated by the engineer, but will need more time to do so.
Staff recommendation:	Grant the extension of time.
Conditions:	Complete all repairs and schedule for re-inspection no later than the deadline stated below, or this case will be turned over to the

	City of Bloomington Legal Department for further action including the possibility of fines.
Compliance Deadline:	October 19, 2017
Attachments:	Application for Appeal, City Legal Documentation, Inspection Report and Plans from the Structural Engineer, Remaining Violations Report.

RECEIVED
MAY 30 2017
BY: .....

Application for Appeal
To The
Board of Housing Quality Appeals
P.O. Box 100
Bloomington, IN 47402
812-349-3420
hand@bloomington.in.gov

Property Address: 910 S. Dunn St.

Petitioner's Name: Cheryl L Underwood

Address: 825 N Walnut St, Ste A

City: Bloomington State: IN Zip Code: 47404

Phone Number: 8123340094 Email Address: cunderwo@homefinder.org

Property Owner's Name: John S. Mason

Address: 625 Foxen Dr.

City: Santa Barbara State: CA Zip Code: 91305

Phone Number: 8059650807 Email Address: hoosierjsm@cox.net

Occupants: Tina Newberry

The following conditions must be found in each case in order for the Board to consider the request:

1. That the exception is consistent with the intent and purpose of the housing code and promotes public health, safety and general welfare.
2. That the value of the area about the property to which the exception is to apply will not be adversely affected.

Please circle the petition type that you are requesting:

A) An extension of time to complete repairs (Petition type TV)

B) A modification or exception to the Residential Rental Unit and Lodging Establishment Inspection Program (Petition type V)

C) Relief from an administrative decision (Petition type AA)

D) Rescind a variance (Petition type RV)

REMINDER: A $20 filing fee must be submitted with this application before the property can be placed on the meeting agenda.

OFFICE USE ONLY
Petition Number 17-TV-96

SEE REVERSE

Please provide details regarding your request below; you may attach any exhibits or additional comments as you deem necessary and pertinent to your request. Be specific as to what you are requesting, the reason or justification for your request; the amount of time needed to bring the property into compliance, and any modifications and/or alterations you are suggesting.

This shed is in poor structural condition and requires extensive construction to make it a building again. Most contractors do not want to take on this kind of a job because a) the finished project will cost more than the building is worth and b) the building adds very little value to the property. It is too small to be used for its original purpose as a garage as cars are bigger now and it is too difficult to get in. Additionally, it has a dirt floor. While it is zoned "historic" as the late, great Bill Cook said "Not all buildings that are old are historic". This is the perfect example. The owner

Signature (required): Cheryl L Underwood

Name (please print): Cheryl L Underwood Date: 5/29/17

is willing to rebuild to the engineers specifications but would like more time.

You may attend the meeting. If you attend, please note that all petitioners presenting a matter to the Board shall be limited to no more than five minutes to present their case and arguments. Additional time can be granted if deemed appropriate by the Board. Please note that if your property is listed on the consent agenda it is more likely than not that your property will not be individually discussed during the Board's meeting.

It is not a life/safety issue and is only used for storing a few pieces of junk.

BLOOMINGTON

John Hewett <hewettj@bloomington.in.gov>

910 S Dunn

3 messages

John Hewett <hewettj@bloomington.in.gov> Mon, May 1, 2017 at 2:36 PM
To: Eric Sader <sadere@bloomington.in.gov>, Doris Sims <simsd@bloomington.in.gov>, Christopher Wheeler <wheelech@bloomington.in.gov>

I got this file from Eric this morning to answer questions for someone at the front desk.
Property address: 910 S Dunn St.
Owner: John Mason
Agent Cheryl Underwood

Dee cycled this on November 7, 2016. Matt re-inspected on March 2, 2017, violations remained. Doris started Legal on April 4, 2017. Chris sent the Legal Letter on April 11, 2017- compliance date 4/25/2017. On April 21, an employee of Cheryl Underwood brought some required documentation to the Legal Department and got a receipt from Barb Toddy. Today she brought the same documentation to our front counter. The documents include a signed report from Kevin Potter, structural engineer, stating the garage on this property is not structurally sound. This document was required on the Cycle Inspection Report. I plan to inform the agent that the next step is to appeal for an extension of time to address the issues with the garage. That will leave only the exterior painting which has a November 7, 2017 deadline, as the only outstanding violation.

John
--
John Hewett
Program Manager
HAND
812-349-3420

Eric Sader <sadere@bloomington.in.gov> Mon, May 1, 2017 at 3:32 PM
To: John Hewett <hewettj@bloomington.in.gov>
Cc: Doris Sims <simsd@bloomington.in.gov>, Christopher Wheeler <wheelech@bloomington.in.gov>

Thanks for the update.

- Eric

Eric A. Sader, JD, MSW
Assistant Director, Housing and Neighborhood Development
City of Bloomington, Indiana
sadere@bloomington.in.gov, 812-349-3420 (main), 812-349-3582 (fax)

[Quoted text hidden]

Christopher Wheeler <wheelech@bloomington.in.gov> Tue, May 2, 2017 at 8:38 AM
To: John Hewett <hewettj@bloomington.in.gov>
Cc: Eric Sader <sadere@bloomington.in.gov>, Doris Sims <simsd@bloomington.in.gov>

John,

That's perfect. Thank you, John.

Christopher J. Wheeler
[Quoted text hidden]

BLOOMINGTON

John Hewett <hewettj@bloomington.in.gov>

910 S. Dunn

2 messages

John Hewett <hewettj@bloomington.in.gov> Tue, May 2, 2017 at 11:19 AM
To: cherylunderwood@me.com, Hoosierjsm@cox.net

Hello,
I am contacting you to let you know that I received the structural engineer's report for the garage at this property. This report indicates that the garage is in need of further work to be structurally sound. I would like to recommend that you appeal to the Board of Housing Quality Appeals for an extension of time to make the repairs as defined in Kevin Potter's report. For this level of work, a building permit from the Monroe County Building Department will be required.

Please contact me if you have any further questions.

John

--
John Hewett
Program Manager
HAND
812-349-3506

Cheryl Underwood <cherylunderwood@me.com> Tue, May 2, 2017 at 12:39 PM
To: John Hewett <hewettj@bloomington.in.gov>

Thanks
Will do

Cheryl L Underwood
Aronis & Underwood Realty
[Quoted text hidden]

NOTES

RECEIPT

DATE 9/21/17 NO. 4609

City of Bloomington RECEIVED FROM Mary Judson

RECEIVED ADDRESS

APR 21 2017 $

FOR letter to Chris Wheeler

Legal Department

Bloomington, IN

ACCOUNT		HOW PAID	
Name of ACCOUNT		CASH	
AMT PAID		CHECK	
BALANCE DUE		MONEY ORDER	

BY Barb Toddy

©2001 REDIFORM® 8L808

Q#6

City of Bloomington
Legal Department

Assistant City Attorneys
Anahit Behjou
Thomas D. Cameron
Barbara E. McKinney
Jacquelyn F. Moore
Christopher J. Wheeler

RE: 910 S. Dunn St., Bloomington, IN

.egal Department received a referral from the Department of Housing
ɔment ("HAND") concerning possible violations of the Bloomington
itle 16: Residential Rental Unit Inspection Program. The Title 16
ncy Permit for this property expired on August 9, 2016. Under BMC §
'or you to allow tenants to occupy this property without an occupancy
cupancy permit cannot be issued until you correct all violations
Violation Inspection Report of March 7, 2017.

ngineering report for the garage delivered to HAND no later than
ge is not structurally sound, and if you need additional time in which
en please file for an extension of time with the Board of Housing
5, 2017. Otherwise the City may initiate an ordinance violation
'ity will seek fines up to $2,500.00 per day for each day that the
ce dating back to August 9, 2016. Furthermore, the City may ask that
the property be and remain vacated until and unless you bring the same into full compliance.

Your prompt attention to this matter is greatly appreciated.

Sincerely,

Christopher J. Wheeler
Assistant City Attorney

cc: Doris Sims, Director for the Department of Housing and Neighborhood Development
Cheryl Underwood, Agent

910

Corporation Counsel
Philippa M. Guthrie

City Attorney
Michael M. Rouker

City of Bloomington
Legal Department

Assistant City Attorneys
Anahit Behjou
Thomas D. Cameron
Barbara E. McKinney
Jacquelyn F. Moore
Christopher J. Wheeler

April 11, 2017

Mr. John S. Mason
625 Foxen Dr.
Santa Barbara, CA 91305

RE: 910 S. Dunn St., Bloomington, IN

Dear Mr. John S. Mason,

The City of Bloomington Legal Department received a referral from the Department of Housing and Neighborhood Development ("HAND") concerning possible violations of the Bloomington Municipal Code (BMC), Title 16: Residential Rental Unit Inspection Program. The Title 16 Residential Rental Occupancy Permit for this property expired on August 9, 2016. Under BMC § 16.03.030 it is a violation for you to allow tenants to occupy this property without an occupancy permit from HAND. An occupancy permit cannot be issued until you correct all violations outlined in the Remaining Violation Inspection Report of March 7, 2017.

Please have the structural engineering report for the garage delivered to HAND no later than **April 25, 2017.** If the garage is not structurally sound, and if you need additional time in which to remedy that situation, then please file for an extension of time with the Board of Housing Quality Appeals by April 25, 2017. Otherwise the City may initiate an ordinance violation lawsuit. In that event, the City will seek fines up to $2,500.00 per day for each day that the property is out of compliance dating back to August 9, 2016. Furthermore, the City may ask that the property be and remain vacated until and unless you bring the same into full compliance.

Your prompt attention to this matter is greatly appreciated.

Sincerely,

Christopher J. Wheeler
Assistant City Attorney

cc: Doris Sims, Director for the Department of Housing and Neighborhood Development
Cheryl Underwood, Agent

Corporation Counsel
Philippa M. Guthrie

City Attorney
Michael M. Rouker

City of Bloomington
Legal Department

Assistant City Attorneys
Anahit Behjou
Thomas D. Cameron
Barbara E. McKinney
Jacquelyn F. Moore
Christopher J. Wheeler

April 11, 2017

Cheryl Underwood
825 N. Walnut St., Suite A
Bloomington, IN 47404

RE: 910 S. Dunn St., Bloomington, IN

Dear Mrs. Cheryl Underwood,

Enclosed please find a letter directed to Mr. Mason re: the above referenced rental property to which you serve as agent. Please take all steps necessary to assist Mr. Mason in bringing this property into full compliance.

Your prompt attention to this matter is greatly appreciated.

Sincerely,

Christopher J. Wheeler
Assistant City Attorney

Enc. Letter to Owner

cc: Doris Sims, Director for the Department of Housing and Neighborhood Development

Message Confirmation Report APR-21-2017 10:25 AM FRI

WorkCentre M20i Series
Machine ID : ARONIS UNDERWOOD
Serial Number : RYU281660.....
Fax Number : 8123342441

Name/Number : 18123493441
Page : 6
Start Time : APR-21-2017 10:24AM FRI
Elapsed Time : 00'48"
Mode : STD ECM
Results : O.K

910

Corporation Counsel
Philippa M. Guthrie

City Attorney
Michael M. Rouker

City of Bloomington
Legal Department

Assistant City Attorneys
Anahit Behjou
Thomas D. Cameron
Barbara E. McKinney
Jacquelyn F. Moore
Christopher J. Wheeler

April 11, 2017

Mr. John S. Mason
625 Foxen Dr.
Santa Barbara, CA 91305

RE: 910 S Dunn St., Bloomington, IN

Dear Mr. John S. Mason,

The City of Bloomington Legal Department received a referr from the Department of Housing and Neighborhood Development ("HAND") concerning poss le violations of the Bloomington Municipal Code (BMC), Title 16: Residential Rental Unit Ins ection Program. The Title 16 Residential Rental Occupancy Permit for this property expire on August 9, 2016. Under BMC § 16.03.030 it is a violation for you to allow tenants to occupy is property without an occupancy permit from HAND. An occupancy permit cannot be issued u il you correct all violations outlined in the Remaining Violation Inspection Report of Ma h 7, 2017.

Please have the structural engineering report for the garage de vered to HAND no later than **April 25, 2017.** If the garage is not structurally sound, and if, ou need additional time in which to remedy that situation, then please file for an extension of ti e with the Board of Housing Quality Appeals by April 25, 2017. Otherwise the City may i tiate an ordinance violation lawsuit. In that event, the City will seek fines up to $2,500.00 er day for each day that the property is out of compliance dating back to August 9, 2016. urthermore, the City may ask that the property be and remain vacated until and unless you bring he same into full compliance.

Your prompt attention to this matter is greatly appreciated.

Sincerely,

Christopher J. Wheeler
Assistant City Attorney

cc: Doris Sims, Director for the Department of Housing a Neighborhood Development
Cheryl Underwood, Agent

401 N. Morton Street • Bloomington, IN 47404 [redacted] Phone: (812) 349-3426 • Fax: (812) 349-3441
www.bloomington.in.gov
e-mail: legal@bloomington.in.gov

POTTER ENGINEERING
Structural Engineering
P.O. Box 5563
Bloomington, IN 47407
Phone (812) 331-7981
EMAIL- kevinbpotter@gmail.com

April 20, 2017

Cheryl Underwood

Re: 910 South Dunn Street

Per your request, we recently performed a structural inspection for the detached garage building located at 910 South Dunn Street, Bloomington, IN. The results of this inspection are summarized as follows:

1. The garage building is 12 feet by 18 feet in area and is wood framed construction. The garage framing is bearing on small stone or block piers at the four corners. There is a large gap between the bottom of the framing and the ground along the South side and West side.

2. The foundation support piers are very inadequate. The piers have settled unevenly resulting in a slope to the structure. Also, the structure is sagging between the support piers.

3. The roof shingles are old and in poor condition. It appears that multiple shingle layers exist. Roof leaking appears to have been minimal.

4. The wood framing was found to be in good condition except for being skewed as a result of the uneven foundation settlement. The exterior has not been painted for some time.

5. Trees have grown very close to the garage including a very large tree against the west end of the south wall. A tree about 12 inches in diameter is rubbing against the roof edge near the east end of the north wall. There are two small trees close to the west wall.

RECOMMENDATIONS

The following work is recommended in order to correct the structural deficiencies in the garage.

a. Install six support piers with one pier under each corner and one pier under the middle of the north and south walls. The piers would consist of a 24" x 24" x 8" concrete footing pad set below frost depth and 8" concrete block bearing on top of the footing and extending to the bottom of the garage framing. The piers would be set level in order to level the garage structure.

b. A treated 2 x 10 band board would be installed along the bottom of the north, south, and west walls on the interior and would bear on top of the proposed concrete block piers. The band board should be continuous from pier to pier with no mid-span butt joints.

c. The gap between the bottom of the siding and the ground should be covered with either a vinyl skirting or a treated plywood enclosure.

d. All layers of roof shingles should be removed. Any poor decking boards should be replaced. A new shingle layer should be installed.

e. The exterior should be painted in the near future.

f. The trees as described are very close to the structure, but are not in conflict with the proposed foundation piers. The trees could remain for now, but may need to be removed in the future.

Please contact us if there are questions.

Kevin B. Potter
Structural Engineer/ Inspector

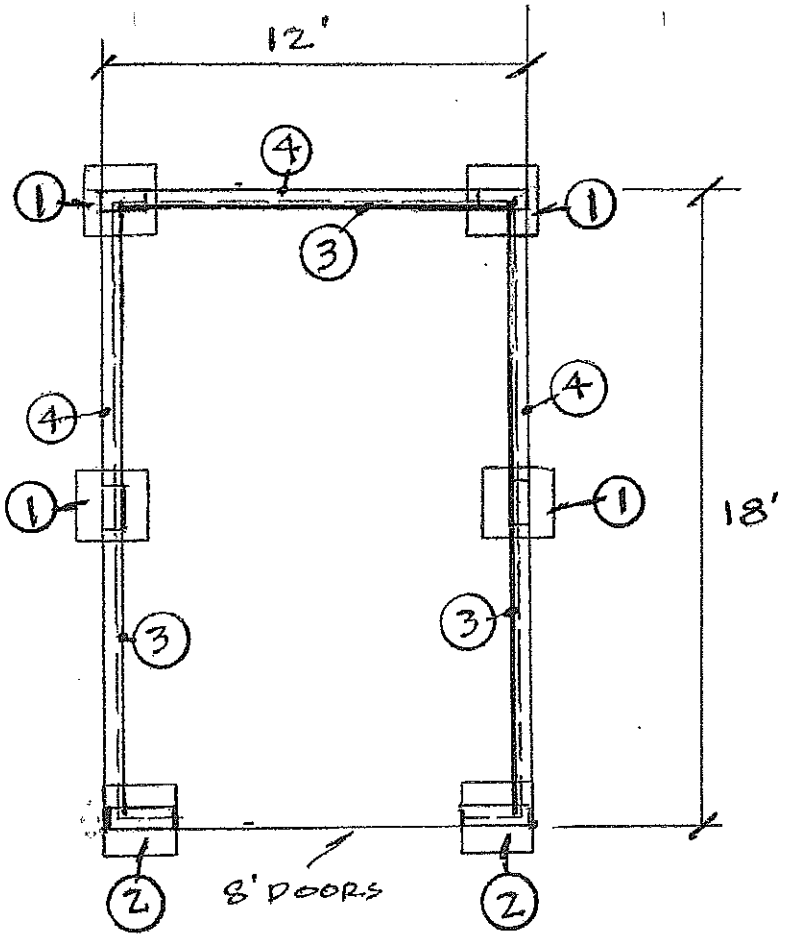

1. ADD 24"x24"x8" FOOTING w/ 8"x16" CONCRETE BLOCK PIER
2. ADD 24"x24"x8" FOOTING w/ 8"x24" CONCRETE BLOCK PIER
3. ADD TREATED 2x10 BAND BOARD AT BOTTOM OF WALL
4. EXISTING 2x4 FRAMED WALL

GARAGE
910 S. DUNN ST.
BLOOMINGTON, IN

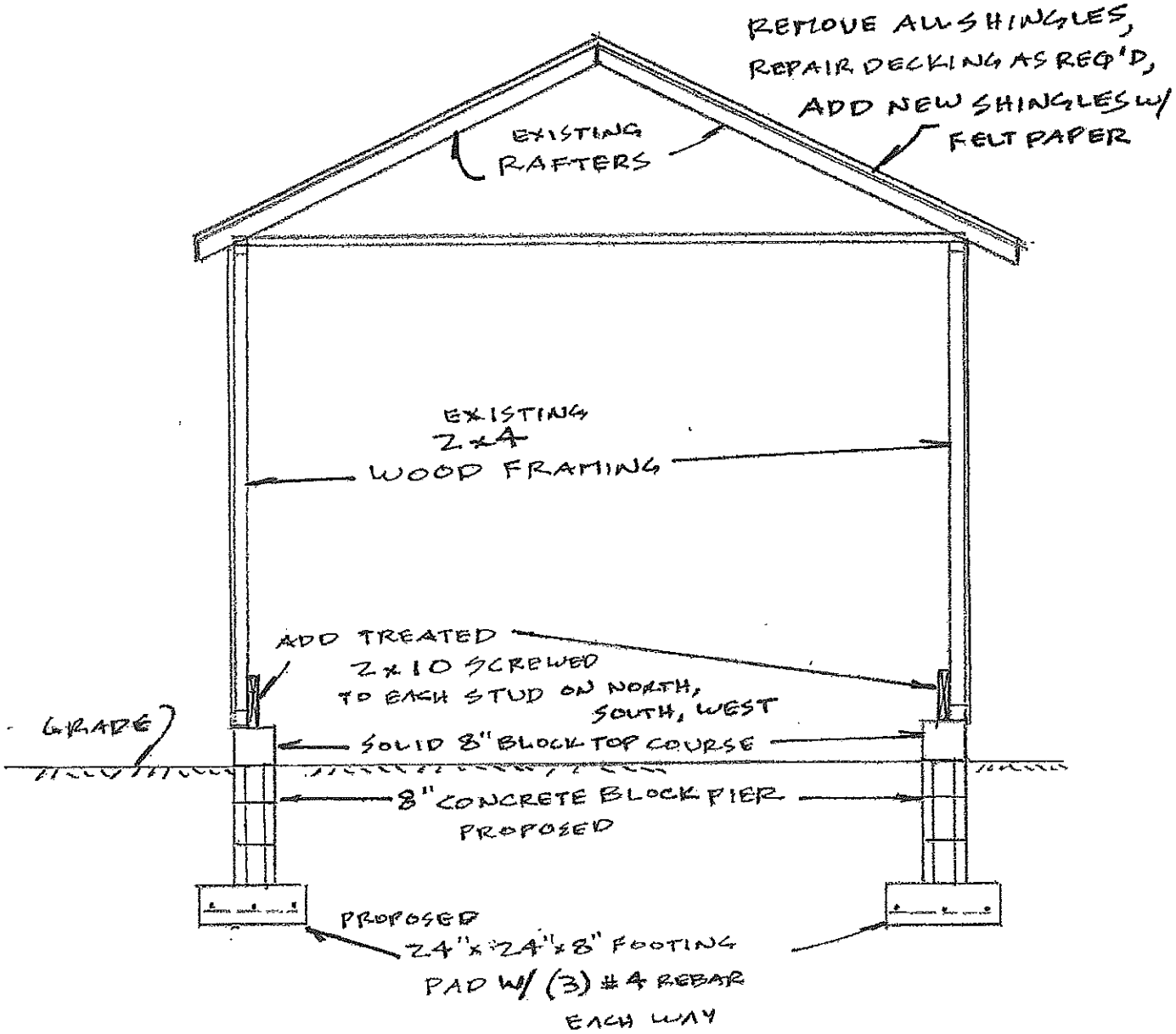

GARAGE
910 S. DUNN ST.
BLOOMINGTON, IN

Corporation Counsel
Philippa M. Guthrie

City Attorney
Michael M. Rouker

City of Bloomington
Legal Department

Assistant City Attorneys
Anahit Behjou
Thomas D. Cameron
Barbara E. McKinney
Jacquelyn F. Moore
Christopher J. Wheeler

FILE COPY

April 11, 2017

Mr. John S. Mason
625 Foxen Dr.
Santa Barbara, CA 91305

RE: 910 S. Dunn St., Bloomington, IN

Dear Mr. John S. Mason,

The City of Bloomington Legal Department received a referral from the Department of Housing and Neighborhood Development ("HAND") concerning possible violations of the Bloomington Municipal Code (BMC), Title 16: Residential Rental Unit Inspection Program. The Title 16 Residential Rental Occupancy Permit for this property expired on August 9, 2016. Under BMC § 16.03.030 it is a violation for you to allow tenants to occupy this property without an occupancy permit from HAND. An occupancy permit cannot be issued until you correct all violations outlined in the Remaining Violation Inspection Report of March 7, 2017.

Please have the structural engineering report for the garage delivered to HAND no later than **April 25, 2017.** If the garage is not structurally sound, and if you need additional time in which to remedy that situation, then please file for an extension of time with the Board of Housing Quality Appeals by April 25, 2017. Otherwise the City may initiate an ordinance violation lawsuit. In that event, the City will seek fines up to $2,500.00 per day for each day that the property is out of compliance dating back to August 9, 2016. Furthermore, the City may ask that the property be and remain vacated until and unless you bring the same into full compliance.

Your prompt attention to this matter is greatly appreciated.

Sincerely,

Christopher J. Wheeler
Assistant City Attorney

cc: Doris Sims, Director for the Department of Housing and Neighborhood Development
Cheryl Underwood, Agent

Corporation Counsel
Philippa M. Guthrie

City Attorney
Michael M. Rouker

City of Bloomington
Legal Department

Assistant City Attorneys
Anahit Behjou
Thomas D. Cameron
Barbara E. McKinney
Jacquelyn F. Moore
Christopher J. Wheeler

April 11, 2017

FILE COPY

Cheryl Underwood
825 N. Walnut St., Suite A
Bloomington, IN 47404

RE: 910 S. Dunn St., Bloomington, IN

Dear Mrs. Cheryl Underwood,

Enclosed please find a letter directed to Mr. Mason re: the above referenced rental property to which you serve as agent. Please take all steps necessary to assist Mr. Mason in bringing this property into full compliance.

Your prompt attention to this matter is greatly appreciated.

Sincerely,

Christopher J. Wheeler
Assistant City Attorney

Enc. Letter to Owner

cc: Doris Sims, Director for the Department of Housing and Neighborhood Development

City Of Bloomington
Housing and Neighborhood Development

REMAINING VIOLATION INSPECTION REPORT

MAR 0 7 2017

7028

Owner
Mason, John S.
625 Foxen Dr.
Santa Barbara, CA 91305

Agent
Cheryl Underwood
825 N. Walnut Street, Suite A
Bloomington, IN 47404

Prop. Location: 910 S Dunn ST
Number of Units/Structures: 1/1
Units/Bedrooms/Max # of Occupants: Bld 1: 1/3/3

Date Inspected: 11/07/2016
Primary Heat Source: Gas
Property Zoning: RC
Number of Stories: 1

Inspector: Dee Wills
Foundation Type: Basement
Attic Access: No
Accessory Structure: Det. Garage

REINSPECTION REQUIRED

This report is your final notice from the Housing and Neighborhood Development Office that this rental property continues to be in violation of the Residential Rental Unit and Lodging Establishment Inspection Program of Bloomington.

If you have made all of the repairs on this report, contact our office immediately to schedule the required re-inspection.

Failure to make repairs or to schedule the required re-inspection will result in this matter being referred to the City Legal Department. Legal action may be initiated against you under BMC 16.10.040

It is your responsibility to contact the Housing and Neighborhood Development Office to schedule the required re-inspection. Our mailing address and telephone number are listed below.

EXTERIOR

Scrape and paint exterior surfaces where paint is peeling or wood is exposed. BMC 16.04.050(e)
(The painting violation has a one-year deadline from the date of the cycle inspection)

Garage
NC
Properly repair the garage to be plumb. (Currently leaning into tree) BMC 16.04.050(b), BMC 16.01.060(f)

OTHER REQUIREMENTS

Licensed Structural Engineer Documentation

C 5/1/17

The garage is currently leaning into the adjacent tree which indicates possible structural failure. Documentation of inspection by a structural engineer indicating that the garage is structurally sound is required. BMC 16.01.060(f) and BMC 16.04.050(b)

When issued, a copy of the new Rental Occupancy Permit shall be posted as required by BMC 16.03.030(d): All rental units shall be required to have a current occupancy permit displayed in an accessible location inside the unit. The permit shall contain the name of the owner and the agent, the occupant load of the unit, the number of bedrooms, the expiration date of the permit, and any variances that have been granted for the property. BMC 16.03.030(c)

This is the end of this report.

City of Bloomington
H.A.N.D.

Board of Housing Quality Appeals
Staff Report: Petition to Rescind Variance

Meeting Date:	July 19, 2017
Petition Type:	Rescind a variance.
Petition Number:	17-RV-97
Address:	1208 W. Kirkwood Ave.
Petitioner:	HAND
Inspector:	Norman Mosier
Staff Report:	January 23, 2017 - Conducted Cycle Inspection May 30, 2017 - Conducted Re-inspection May 31, 2017 – Prepared July BHQA Staff Report

This property was previously granted a variance to the ceiling height requirements of the Property Maintenance Code. The Residential Rental and Lodging Establishment Inspection Program does not include a ceiling height requirement and the Building Code in place at the time of construction did not address ceiling height; therefore we are asking the Board to rescind this variance. This structure was built in 1899.

Staff Recommendation: Rescind the variance.

Conditions: None

Attachments: None

City of Bloomington
H.A.N.D.

Board of Housing Quality Appeals
Staff Report: Petition for Extension of Time

Meeting Date:	July 19, 2017
Petition Type:	An extension of time to complete repairs
Petition Number:	17-TV-98
Address:	501 E. 1st Street
Petitioner:	Samantha Michael
Inspector:	Dee Wills
Staff Report:	March 27, 2017 Completed Cycle Inspection June 06, 2017 Received Application for Appeal The petitioner is requesting an extension of time to complete the repairs to the exterior siding. Instead of repairing the damaged/ deteriorated siding, the petitioner is having new siding installed, however rain has delayed the start of this process.
Staff recommendation:	Grant the extension of time.
Conditions:	Complete all repairs and schedule for re-inspection no later than the deadline stated below, or this case will be turned over to the City of Bloomington Legal Department for further action including the possibility of fines.
Compliance Deadline:	August 19, 2017
Attachments:	Application for Appeal, Cycle Report

RECEIVED
JUN 0 5 2017
BY: .....

CITY OF BLOOMINGTON, INDIANA

Application for Appeal
To The
Board of Housing Quality Appeals
P.O. Box 100
Bloomington, IN 47402
812-349-3420
hand@bloomington.in.gov

Property Address: 501 E 1st St

Petitioner's Name: Samantha Michael

Address: 214 N Rogers St

City: Bloomington **State:** IN **Zip Code:** 47404

Phone Number: 812.360.1975 **Email Address:** info@chickenhgrentals.com

Property Owner's Name: Millham Realty Inc

Address: 214 N Rogers St

City: Bloomington **State:** IN **Zip Code:** 47404

Phone Number: 812.360.1975 **Email Address:** —

Occupants: 4

The following conditions must be found in each case in order for the Board to consider the request:

1. That the exception is consistent with the intent and purpose of the housing code and promotes public health, safety and general welfare.
2. That the value of the area about the property to which the exception is to apply will not be adversely affected.

Please circle the petition type that you are requesting:

(A) An extension of time to complete repairs (Petition type **TV**)

B) A modification or exception to the Residential Rental Unit and Lodging Establishment Inspection Program (Petition type **V**)

C) Relief from an administrative decision (Petition type **AA**)

D) Rescind a variance (Petition type **RV**)

REMINDER: A $20 filing fee must be submitted with this application before the property can be placed on the meeting agenda.	OFFICE USE ONLY Petition Number 17-TV-98

SEE REVERSE

DW

Please provide details regarding your request below; you may attach any exhibits or additional comments as you deem necessary and pertinent to your request. Be specific as to what you are requesting, the reason or justification for your request, the amount of time needed to bring the property into compliance, and any modifications and/or alterations you are suggesting.

We would like to replace the siding instead of repairing it. The rain has kept us from getting started. We would like an extension until the end of July 2017 at the latest.

Signature (required): Samantha Michael

Name (please print): Samantha Michael **Date:** 6-5-17

You may attend the meeting. If you attend, please note that all petitioners presenting a matter to the Board shall be limited to no more than five minutes to present their case and arguments. Additional time can be granted if deemed appropriate by the Board. Please note that if your property is listed on the consent agenda it is more likely than not that your property will not be individually discussed during the Board's meeting.

City Of Bloomington
Housing and Neighborhood Development

RENTAL PERMIT INFORMATION

APR 1 1 2017

Michael, Samantha
5396 N Hanna Ct
Bloomington, IN 47404

Property Location: 501 E 1st ST

Please find enclosed the Cycle Inspection Report which details recommendations and violations found during the recent inspection of your rental property. You have sixty (60) days from the date of this letter to correct the violations listed on the report.

Once violations have been corrected, it is your responsibility to call the Housing and Neighborhood Development office by JUN 1 0 2017 to schedule a re-inspection. You have the right to appeal any violation to the Board of Housing Quality Appeals. An appeal form can be found at www.bloomington.in.gov/hand. If you do not have access to the internet, you may contact HAND at 812-349-3420 and a form will be provided.

This report is issued in accordance with BMC 16.10.020(a) and 16.10.040(a) of the Residential Rental Unit and Lodging Establishment Inspection Program. Residential Rental Occupancy Permits will not be issued until all interior and exterior violations have been corrected, and all fees have been paid. Please be advised that non-compliance by the deadlines listed in this letter can limit the permit period to a maximum of three (3) years. A copy of the Notice of Fees can be found at www.bloomington.in.gov/hand. If you do not have access to the internet, you may contact HAND at 349-3420 and a form will be provided.

If your address has changed since your last inspection, please submit a new registration form to the HAND Department. You can find the registration form online at the website listed above. If you do not have internet access, you may contact HAND at 812-349-3420 and a form will be mailed.

If you have any questions regarding the permit process, please call weekdays between 8:00 a.m. and 5:00 p.m., at (812) 349-3420.

Sincerely,

Housing & Neighborhood Development
Encl:Inspection Report,

City Of Bloomington
Housing and Neighborhood Development

CYCLE INSPECTION REPORT

2915

Owner(s)
Michael, Samantha
5396 N Hanna Ct
Bloomington, IN 47404

Prop. Location: 501 E 1st ST
Number of Units/Structures: 1/1
Units/Bedrooms/Max # of Occupants: Bld 1: 1/4/4

Date Inspected: 03/27/2017
Primary Heat Source: Gas
Property Zoning: RC
Number of Stories: 2

Inspector: Dee Wills
Foundation Type: Basement
Attic Access: Yes
Accessory Structure: Garage

Monroe County Assessor's records indicate this structure was built in 1910.
There are no minimum requirements for emergency egress at the time of construction.

INTERIOR

Main Level

Entry
Repair the entry door to be weather tight. No gaps shall be visible around the edges. BMC 16.04.060(a)

Living Room (26-1 x 13-4)
No violations noted.

Kitchen (11-3 x 7-9)
No violations noted.

1/2 Bathroom
No violations noted.

Upper Level
Hallway
No violations noted.

NE Bedroom (13-6 x 10-3), SW Bedroom (9-11 x 11-5), NW Bedroom (13-4 x 10-3)
No violations noted.

Existing Egress Window Measurements:
Height: 53 inches
Width: 23 inches
Sill Height: 27 inches
Openable Area: 8.46 sq. ft.

Note: These measurements are for reference only. There is no violation of the emergency egress requirements.

SE Bedroom (9-10 x 11-6)
Repair or replace existing smoke detector in a manner so that it functions as intended. IC 22-11-18-3.5

Existing Egress Window Measurements:
Height: 53 inches
Width: 23 inches
Sill Height: 27 inches
Openable Area: 8.46 sq. ft.

Note: These measurements are for reference only. There is no violation of the emergency egress requirements.

Basement
Stairway
Repair the surface of the ceiling to be free of holes, cracks, peeling paint and/or sagging materials. BMC 16.04.060(a)

Properly secure all support posts at the top and bottom to eliminate the possibility of movement. BMC 16.04.060(b)

EXTERIOR

Properly secure the front porch siding at the ceiling. BMC 16.04.050(a)

Properly repair/ replace the deteriorated concrete front top step so that it functions as intended. BMC 16.04.050(a)

Properly repair or replace damaged or deteriorated siding in a manner that leaves the structure weather tight. This is to be done in a workmanlike manner and includes but is not limited to all damaged or deteriorating siding and structural members. BMC 16.04.050(a)

Scrape and paint exterior surfaces (window frames only) where paint is peeling or wood is exposed. BMC 16.04.050(e)
(the painting violation has a one-year deadline from the date of the cycle inspection)

Garage
No violations noted.

Other requirements

When issued, a copy of the new Rental Occupancy Permit shall be posted as required by BMC: All rental units shall display a current occupancy permit in an accessible location inside said unit. The permit shall contain the name of the owner or his agent and the expiration date of the permit. BMC 16.16.03.030(d)

This is the end of this report.

City of Bloomington
H.A.N.D.

Board of Housing Quality Appeals
Staff Report: Petition for Extension of Time

Meeting Date:	July 19th, 2017
Petition Type:	An extension of time to complete repairs.
Petition Number:	17-TV-99
Address:	2615 E. Dekist Street
Petitioner:	Ann Krielkamp
Inspector:	Kenny Liford
Staff Report:	March 2, 2017 Completed Cycle Inspection Report June 5, 2017 BHQA App received

Owner has requested an extension of time to complete the repairs to 2615 E. Dekist.
Due to the extensive work involved with the garage, the owner has not been able to complete all of the interior work listed on the cycle report.

Staff recommendation: Grant the request.

Conditions: All repairs must be completed and re-inspected no later than the deadline stated below, or this case will be turned over to the City of Bloomington Legal Department for further action including the possibility of fines.

Compliance Deadline: August 19th, 2017 to call and schedule the reinspection for the interior and exterior repairs.
October 19th, 2017 to call and schedule the reinspection for the garage.

Attachments: Cycle Inspection, BHQA Appeal, Petitioner's Letter

RECEIVED
JUN 0 5 2017
BY: EW

Application for Appeal
To The
Board of Housing Quality Appeals
P.O. Box 100
Bloomington, IN 47402
812-349-3420
hand@bloomington.in.gov

Property Address: 2615 E. Dekist St. 47408

Petitioner's Name: Ann Kriedkamp / Charisse Ellsworth

Address: 134 N. Overhill

City: Bloomington State: In Zip Code: 47408

Phone Number: 812-822-2053 Email Address: jacobscode53@gmail

Property Owner's Name: Ann Kriedkamp

Address: 134 N. Overhill Dr

City: Bloomington State: In Zip Code: 47408

Phone Number: 812-822-2053 Email Address:

Occupants: None

The following conditions must be found in each case in order for the Board to consider the request:

1. That the exception is consistent with the intent and purpose of the housing code and promotes public health, safety and general welfare.
2. That the value of the area about the property to which the exception is to apply will not be adversely affected.

Please circle the petition type that you are requesting:

A) An extension of time to complete repairs (Petition type TV)

B) A modification or exception to the Residential Rental Unit and Lodging Establishment Inspection Program (Petition type V)

C) Relief from an administrative decision (Petition type AA)

D) Rescind a variance (Petition type RV)

REMINDER: A $20 filing fee must be submitted with this application before the property can be placed on the meeting agenda.

OFFICE USE ONLY
Petition Number 17-TV-99

SEE REVERSE

KL

Please provide details regarding your request below; you may attach any exhibits or additional comments as you deem necessary and pertinent to your request. Be specific as to what you are requesting, the reason or justification for your request; the amount of time needed to bring the property into compliance, and any modifications and/or alterations you are suggesting.

I've been too busy planting out this past month on our Urban Farm to be able to get to repairing the new house. Not enough of me to go around! We've been doing major outside dirt moving and /landscape work around that new house also. Have not gotten to the inside.

Signature (required): Rebecca Ellenwood

Name (please print): _____ Date: _____

You may attend the meeting. If you attend, please note that all petitioners presenting a matter to the Board shall be limited to no more than five minutes to present their case and arguments. Additional time can be granted if deemed appropriate by the Board. Please note that if your property is listed on the consent agenda it is more likely than not that your property will not be individually discussed during the Board's meeting.

City Of Bloomington
Housing and Neighborhood Development

CYCLE INSPECTION REPORT

7677

Owner(s)
Ann R. Kreilkamp
134 N. Overhill Drive
Bloomington, IN 47408

Prop. Location: 2615 E Dekist ST
Number of Units/Structures: 1/1
Units/Bedrooms/Max # of Occupants: Bld 1: 1/2/3

Date Inspected: 03/01/2017
Primary Heat Source: Gas
Property Zoning: RC
Number of Stories: 1

Inspector: Kenneth Liford
Foundation Type: Crawl Space
Attic Access: No
Accessory Structure: Shed/Gazebo

Monroe County Assessor's records indicate this structure was built in 1956.
There were no requirements for emergency egress at the time of construction.

INTERIOR

Entry
Every door which connects a rental unit with any area exterior to the unit shall have a functioning locking device, door hinge, and door latch and shall be maintained in good condition. Door locks in rental units shall be capable of tightly securing the door and shall be openable from the inside without the use of a key, special knowledge or effort. BMC 16.04.060(a), BMC 16.04.060(b)

Living Room (23x14-3), Family Room off Kitchen (18x11-2), Laundry/Bath, Furnace closet
No violations noted.

Kitchen
Repair the ignitors so the range burners to function as intended. BMC 16.04.060(c)

Loft
Interior walls shall be free of holes, cracks, peeling paint and/or deteriorated drywall/plaster. BMC 16.04.060(a)

Hall Bath
Replace/Repair the missing knob for bathtub. BMC 16.04.060(c)

Northeast Bedroom (11-4x8-9)
Repair or replace closet doors so they function as intended. BMC 16.04.060(a)

Existing Egress:
Height: 20.5 inches
Width: 32 inches
Sill Height: 36 inches
Openable Area: 4.56 sq. ft.

Note: These measurements are for reference only. There is no violation of the emergency egress requirements.

Southeast Bedroom (12-5x9-1)
No violations noted.

Existing Egress:
Height: 20.5 inches
Width: 32 inches
Sill Height: 36 inches
Openable Area: 4.56 sq. ft.

Note: These measurements are for reference only. There is no violation of the emergency egress requirements.

EXTERIOR

Properly reconnect all gutters/downspouts in a manner that reasonably directs water away from the structure. BMC 16.04.050(a)

Remove and properly dispose of any unusable yard waste/brush pile. BMC 16.04.040(d)

Repair or replace damaged or deteriorating roofing on garage/shed. This is to be done in a workmanlike manner and includes but is not limited to damaged or deteriorating roofing material, sheathing, and all structural members. BMC 16.04.050(a)

Remove or cap old drain pipe in yard on east side of house. BMC 16.04.050(b)

Scrape and paint exterior surfaces where paint is peeling or wood is exposed. BMC 16.04.050(e)
(The painting violation has a one-year deadline from the date of the cycle inspection)

When issued, a copy of the new Rental Occupancy Permit shall be posted as required by BMC 16.03.030(d): All rental units shall be required to have a current occupancy permit displayed in an accessible location inside the unit. The permit shall contain the name of the owner and the agent, the occupant load of the unit, the number of bedrooms, the expiration date of the permit, and any variances that have been granted for the property. BMC 16.03.030(c)

This is the end of this report.

City of Bloomington
H.A.N.D.

Board of Housing Quality Appeals
Staff Report: Petition to Rescind Variance

Meeting Date:	July 19, 2017
Petition Type:	Rescind a variance.
Petition Number:	17-RV-100
Address:	752 S. Walnut St.
Petitioner:	HAND
Inspector:	Norman Mosier
Staff Report:	January 30, 2017 – Conducted Cycle Inspection April 10, 2017 – Owner Scheduled Re-inspection for 06/05/2017 @ 1:30 June 5, 2017 – Conducted Re-inspection with Owner June 6, 2017 – Received BHQA Appeal

This property was previously granted a variance to the ceiling height and to allow a fuel fired heater to remain in a sleeping room requirements of the Property Maintenance Code. The Residential Rental and Lodging Establishment Inspection Program does not include a ceiling height and to allow a fuel fired heater to remain in a sleeping room requirement and the Building Code in place at the time of construction did not address ceiling height and to allow a fuel fired heater to remain in a sleeping room; therefore we are asking the Board to rescind this variance. This structure was built in 1930.

Staff Recommendation: Rescind the variance.

Conditions: None

Attachments: None

City of Bloomington
H.A.N.D.

Board of Housing Quality Appeals
Staff Report: Petition to Rescind Variance

Meeting Date:	July 19, 2017
Petition Type:	Rescind a variance.
Petition Number:	17-RV-101
Address:	754 S. Walnut St.
Petitioner:	HAND
Inspector:	Norman Mosier
Staff Report:	January 30, 2017 – Conducted Cycle Inspection April 10, 2017 – Owner Scheduled Re-inspection for 06/05/2017 @ 1:30 June 5, 2017 – Conducted Re-inspection with Owner June 6, 2017 – Received BHQA Appeal

This property was previously granted a variance to the ceiling height and room size requirements of the Property Maintenance Code. The Residential Rental and Lodging Establishment Inspection Program does not include a ceiling height and room size requirement and the Building Code in place at the time of construction did not address ceiling height and room size; therefore we are asking the Board to rescind this variance. This structure was built in 1930.

Staff Recommendation: Rescind the variance.

Conditions: None

Attachments: None

City of Bloomington
H.A.N.D.

Board of Housing Quality Appeals
Staff Report: Petition for Extension of Time

Meeting Date:	19 July 2017	
Petition Type:	An extension of time to complete repairs	
Petition Number:	17-TV-102	
Address:	1818 S. Maxwell St.	
Petitioner:	Cynthia Hogan	
Inspector:	Michael Arnold	
Staff Report:	18 April 2017	Cycle Inspection
	27 April 2017	Mailed Report
	06 June 2017	Received BHQA Application

Petitioner is requesting additional time to complete repairs. Window cranks were removed on purpose due to special needs tenants, but have not been located. There have also been family issues that have delayed work.

Staff recommendation:	Grant the extension of time
Conditions:	Complete all repairs and schedule for re-inspection no later than the deadline stated below, or this case will be turned over to the City of Bloomington Legal Department for further action including the possibility of fines.
Compliance Deadline:	August 2, 2017 for smoke detector violation September 19, 2017 for all other violations
Attachments:	Cycle Inspection Report, Application

RECEIVED
JUN 06 2017
BY: .....

CITY OF BLOOMINGTON INDIANA

Application For Appeal
To The
Board of Housing Quality Appeals
P.O. Box 100
Bloomington, IN 47402
812-349-3420
hand@bloomington.in.gov

Property Address: 1818 S Maxwell Street Bloomington, IN 47401

Petitioner's Name: Cynthia Hogan

Address: 1730 S. Maxwell Street

City: Bloomington **State:** Indiana **Zip Code:** 47401

Phone Number: 8123223434 **E-mail Address:** ssare@indiana.edu

Owner's Name: Sally Sare/Cynthia Hogan

Address: 1730 S Maxwell Street

City: Bloomington **State:** Indiana **Zip Code:** 47401

Phone Number: 8123224141 **E-mail Address:** ssare@indiana.edu

Occupants: Michael Patton
Adam Tomlin
Chris Reinhard

The following conditions must be found in each case in order for the Board to consider the request:

1. That the exception is consistent with the intent and purpose of the housing code and promotes public health, safety, and general welfare.
2. That the value of the area about the property to which the exception is to apply will not be adversely affected.

Identify the variance type that you are requesting from the following drop down menu:

Variance Type: An extension of time to complete repairs. (Petition Type: TV)

Reminder:
A $20.00 filing fee must be submitted with the Appeal Application or the application will not be considered to be complete! A completed application has to be submitted prior to the meeting application deadline in order to be placed on that months agenda!

(Will be assigned by BHQA)

Petition Number: 17-TV-102

MA

In the space provided below please write a brief narrative regarding your request. Be specific as to what you are requesting, the reason(s) or justification(s) for your request, the amount of time needed to bring the property into compliance, as well as any modifications and/or alterations you are suggesting. The following information must be included dependent upon the type of variance you are requesting:

A. An extension of time to complete repairs. (Petition type: TV)
   1. Specify the items that need the extension of time to complete.
   2. Explain why the extension is needed.
   3. Specify the time requested.

B. A modification or exception to the Housing Property Maintenance Code. (Petition type: V)
   1. Specify the code reference number you are appealing.
   2. Detail why you are requesting the variance.
   3. Specify the modifications and or alterations you are suggesting.

C. Relief from an administration decision. (Petition type: AA)
   1. Specify the decision being appealed and the relief you are seeking.

D. Rescind a variance. (Petition type: RV)
   1. Detail the existing variance.
   2. Specify the reason the variance is no longer needed.

Family issues - had to move my mother (or we would have done bottom)

Contractor - reviewed / did walk thru, still hasn't been able to make it over / laundry door // bathroom wall tree limbs on shed

Cranks - Special needs tenants, house manager removed

Cranks on purpose, Stonebelt still looking for cranks

We purchased (new) smoke detector

Brush Pile = done

Signature (Required): [signature]

Name (Print): Cynthia Hogan **Date:** 6/6/2017

Important information regarding this application format:
1. This form is designed to be filled out electronically, printed, then returned/submitted manually (e.g. postal mail).
2. This document may be saved on your computer for future use, however, any data that you have entered will not be saved.

Print Form

City Of Bloomington
Housing and Neighborhood Development

RENTAL PERMIT INFORMATION

APR 2 7 2017

Sare, Sally & Hogan, Cynthia
1730 S Maxwell
Bloomington, IN 47401

Property Location: 1818 S Maxwell ST

Please find enclosed the Cycle Inspection Report which details recommendations and violations found during the recent inspection of your rental property. You have sixty (60) days from the date of this letter to correct the violations listed on the report.

Once violations have been corrected, it is your responsibility to call the Housing and Neighborhood Development office by JUN 2 6 2017 to schedule a re-inspection. You have the right to appeal any violation to the Board of Housing Quality Appeals. An appeal form can be found at www.bloomington.in.gov/hand. If you do not have access to the internet, you may contact HAND at 812-349-3420 and a form will be provided.

This report is issued in accordance with BMC 16.10.020(a) and 16.10.040(a) of the Residential Rental Unit and Lodging Establishment Inspection Program. Residential Rental Occupancy Permits will not be issued until all interior and exterior violations have been corrected, and all fees have been paid. Please be advised that non-compliance by the deadlines listed in this letter can limit the permit period to a maximum of three (3) years. A copy of the Notice of Fees can be found at www.bloomington.in.gov/hand. If you do not have access to the internet, you may contact HAND at 349-3420 and a form will be provided.

If your address has changed since your last inspection, please submit a new registration form to the HAND Department. You can find the registration form online at the website listed above. If you do not have internet access, you may contact HAND at 812-349-3420 and a form will be mailed.

If you have any questions regarding the permit process, please call weekdays between 8:00 a.m. and 5:00 p.m., at (812) 349-3420.

Sincerely,

Housing & Neighborhood Development
Encl:Inspection Report,

City Of Bloomington
Housing and Neighborhood Development
CYCLE INSPECTION REPORT

10310

Owner(s)
Sare, Sally & Hogan, Cynthia
1730 S Maxwell
Bloomington, IN 47401

Prop. Location: 1818 S Maxwell ST
Number of Units/Structures: 1/1
Units/Bedrooms/Max # of Occupants: Bld 1: 1/3/3

Date Inspected: 04/19/2017
Primary Heat Source: Gas
Property Zoning: RS
Number of Stories: 1

Inspector: Mike Arnold
Foundation Type: Crawl Space
Attic Access: Yes
Accessory Structure: detached garage

Monroe County records show this structure was built in 1989. The minimum emergency egress requirements at the time of construction were as follows:

Height: 24 inches
Width: 18 inches
Sill Height: 48 inches
Openable Area: 4.75 sq. ft.

Interior:
Living Room/Dining Room/Kitchen (24-0 x 16-6):
Replace the missing window cranks. BMC 16.04.060(b)

Family Room (2-5 x 15-0):
Replace the missing window cranks. BMC 16.04.060(b)

Install a smoke detector in an approved location. If wall mounted, it shall be located between **4 and 12 inches from the ceiling.** If ceiling mounted, it shall be located at least 4 inches from the wall. BMC 16.04.020(a) IRC 216.1

Laundry Room:
Repair the door to the garage to open/close and latch as intended. BMC 16.04.060(a)

Garage:
No violations noted

Bathroom:
Verify at reinspection that the gfci outlet functions as intended. BMC 16.04.060(b)

Repair the wall north of the stall. BMC 16.04.060(a)

Master Bathroom:
Repair the toilet to eliminate unnecessary water use. BMC 16.04.060(a)

NE Bedroom (9-6 x 9-1), SE Bedroom (9-7 x 9-3):

Existing Egress:

Height: **52.5 inches (both sashes removed)**
Width: **35 inches**
Sill Height: **28 inches**
Openable Area: 12.76 sq. ft.

Note: These measurements are for reference only. There is no violation of the emergency egress requirements.

No violations noted

Master Bedroom (12-7 x 11-9):

Existing Egress:

Height: **52.5 inches (both sashes removed)**
Width: **35 inches**
Sill Height: **28 inches**
Openable Area: 12.76 sq. ft.

Note: These measurements are for reference only. There is no violation of the emergency egress requirements.

Replace the missing window cranks. BMC 16.04.060(b) (Closet)

Exterior:
Main Structure:
Remove and properly dispose of yard waste/brush pile. BMC 16.04.040(d)

Shed:
Trim all tree branches away from the siding and roofline to maintain a 3' clearance. BMC 16.04.040(e)

Other Requirements:
Furnace Inspection Documentation:
Thoroughly clean and service the furnace, inspect and test shut off valves for proper operation. Documentation from a professional HVAC contractor for this service is acceptable and encouraged. Servicing shall include a test for carbon monoxide. Acceptable levels of carbon monoxide are as follows:

Desired level:	0 parts per million (ppm)
Acceptable level in a living space:	9 ppm
Maximum concentration for flue products:	50 ppm

BMC 16.01.060(f), BMC 16.04.060(c), BMC 16.04.060(b)

Tenants and Owners Rights and Responsibilities Summary
A completed copy of the Tenants and Owners Rights and Responsibilities Summary must be provided to this office or reviewed with the inspector **within 60 days of the date of the inspection or a $25.00 fine will be levied. BMC 16.03.060(c) and BMC 16.10.030(b)**

Inventory Damage List

The owner or his agent shall contact the tenant and arrange a joint inspection of the premises to occur within ten days of the tenant's occupancy of the rental unit. The owner or his agent and the tenant shall at that time jointly complete an inventory and damage list, and this shall be signed by all parties to the tenancy agreement. Duplicate copies of the inventory and damage list shall be retained by all parties and shall be deemed a part of the tenancy agreement. **A completed copy of the Inventory & Damage List must be provided to the office or reviewed with the inspector within 60 days of the date of the inspection or a $25.00 fine will be levied. BMC 16.03.050(e) and BMC 16.10.030(b)**

When issued, a copy of the new Rental Occupancy Permit shall be posted as required by BMC 16.03.030(d): All rental units shall be required to have a current occupancy permit displayed in an accessible location inside the unit. The permit shall contain the name of the owner or his agent and the expiration date of the permit. BMC 16.03.030(c)

This is the end of this report.

City of Bloomington
H.A.N.D.

Board of Housing Quality Appeals
Staff Report: Petition for Extension of Time

Meeting Date:	July 19, 2017
Petition Type:	An extension of time to complete repairs.
Petition Number:	17-TV-103
Address:	1004 W Kirkwood Ave.
Petitioner:	Teresa Groomer
Inspector:	Matt Swinney
Staff Report:	February 23, 2017 Completed Cycle Inspection Report June 7, 2017 Reinspection June 7, 2017 BHQA App received

Owner has requested an extension of time to complete the repairs. The basement wall must be replaced or repaired in a manner that makes it structurally sound. Signed and stamped documentation from a structural engineer stating that the wall is capable of withstanding the imposed loads placed on it by the house and grade surrounding the house would also be acceptable.

Staff recommendation: Grant the request.

Conditions:

Correct all life-safety issues and re-inspect for compliance no later than the deadline for life-safety issues stated below, or this case will be turned over to the City of Bloomington Legal Department for further action, including, but not limited to, the possibility of fines.

Compliance Deadline: August 7, 2017 to call and schedule the reinspection.

Attachments: Cycle Inspection, BHQA Appeal, Petitioner's Letter

RECEIVED
JUL 0 7 2017
BY: .....

Application for Appeal
To The
Board of Housing Quality Appeals
P.O. Box 100
Bloomington, IN 47402
812-349-3420
hand@bloomington.in.gov

Property Address: 1004 W. Kirkwood Ave

Petitioner's Name: TERESA GROOMER

Address: 6535 W. ISON Rd

City: BLOOMINGTON State: IN Zip Code: 47403

Phone Number: 812-825-2758 Email Address: teresagroomer@yahoo.com

Property Owner's Name: Richard GROOMER

Address: SAME

City: _____ State: _____ Zip Code: _____

Phone Number: _____ Email Address: _____

Occupants: _____

The following conditions must be found in each case in order for the Board to consider the request:

1. That the exception is consistent with the intent and purpose of the housing code and promotes public health, safety and general welfare.
2. That the value of the area about the property to which the exception is to apply will not be adversely affected.

Please circle the petition type that you are requesting:

A) An extension of time to complete repairs (Petition type TV)

B) A modification or exception to the Residential Rental Unit and Lodging Establishment Inspection Program (Petition type V)

C) Relief from an administrative decision (Petition type AA)

D) Rescind a variance (Petition type RV)

REMINDER: A $20 filing fee must be submitted with this application before the property can be placed on the meeting agenda.

OFFICE USE ONLY
Petition Number 17-TV-103

SEE REVERSE

Please provide details regarding your request below; you may attach any exhibits or additional comments as you deem necessary and pertinent to your request. Be specific as to what you are requesting, the reason or justification for your request; the amount of time needed to bring the property into compliance, and any modifications and/or alterations you are suggesting.

NEED TIME TO DO A REPAIR & GET INFORMATION REQUESTED BY HAND

Signature (required): Teresa K Groomer

Name (please print): TERESA K GROOMER Date: 6-7-17

You may attend the meeting. If you attend, please note that all petitioners presenting a matter to the Board shall be limited to no more than five minutes to present their case and arguments. Additional time can be granted if deemed appropriate by the Board. Please note that if your property is listed on the consent agenda it is more likely than not that your property will not be individually discussed during the Board's meeting.

City Of Bloomington
Housing and Neighborhood Development

RENTAL PERMIT INFORMATION

MAR 0 3 2017

Richard D. Groomer
6535 W. Ison Road
Bloomington, IN 47403

Property Location: 1004 W Kirkwood AVE

Please find enclosed the Cycle Inspection Report which details recommendations and violations found during the recent inspection of your rental property. You have sixty (60) days from the date of this letter to correct the violations listed on the report.

Once violations have been corrected, it is your responsibility to call the Housing and Neighborhood Development office by MAY 0 2 2017 to schedule a re-inspection. You have the right to appeal any violation to the Board of Housing Quality Appeals. An appeal form can be found at www.bloomington.in.gov/hand. If you do not have access to the internet, you may contact HAND at 812-349-3420 and a form will be provided.

This report is issued in accordance with BMC 16.10.020(a) and 16.10.040(a) of the Residential Rental Unit and Lodging Establishment Inspection Program. Residential Rental Occupancy Permits will not be issued until all interior and exterior violations have been corrected, and all fees have been paid. Please be advised that non-compliance by the deadlines listed in this letter can limit the permit period to a maximum of three (3) years. A copy of the Notice of Fees can be found at www.bloomington.in.gov/hand. If you do not have access to the internet, you may contact HAND at 349-3420 and a form will be provided.

If your address has changed since your last inspection, please submit a new registration form to the HAND Department. You can find the registration form online at the website listed above. If you do not have internet access, you may contact HAND at 812-349-3420 and a form will be mailed.

If you have any questions regarding the permit process, please call weekdays between 8:00 a.m. and 5:00 p.m., at (812) 349-3420.

Sincerely,

Housing & Neighborhood Development
Encl:Inspection Report,

05

City Of Bloomington
Housing and Neighborhood Development

CYCLE INSPECTION REPORT

1189

Owner
Richard D. Groomer
6535 W. Ison Road
Bloomington, IN 47403

Prop. Location: 1004 W Kirkwood AVE
Number of Units/Structures: 1/1
Units/Bedrooms/Max # of Occupants: Bld 1: 1/3/5

Date Inspected: 02/23/2017
Primary Heat Source: Electric
Property Zoning: CL
Number of Stories: 1

Inspector: Matt Swinney
Foundation Type: Basement
Attic Access: No
Accessory Structure: None

THE UNFINISHED BASEMENT AREA IS NOT APPROVED FOR USE AS HABITABLE SPACE.

Monroe County Assessor's records indicate this structure was built in 1940. There were no requirements for emergency egress at the time of construction.

INTERIOR

Living Room 13-6 x 12-9, Kitchen 13-9 x 13-5, Laundry Room, Bathroom
No violations noted

NE Bedroom (Back Right) 12-8 x 10-44
This room has a door to the exterior.

C Secure loose electrical receptacles. BMC 16.04.060(b)

NW Bedroom (Back Left) 14-2 x 11-4
C Secure loose electrical receptacle by the door. BMC 16.04.060(b)

Egress Window Measurements
Height: 17 inches
Width: 29 inches
Sill Height: 37 inches
Openable Area: 3.42sq. ft.

At the time this structure was built, there were no code requirements for emergency egress for a sleeping room. The Housing & Neighborhood Development Department strongly recommends that the sleeping room egress windows be modified or replaced with a larger window to aid in emergency escape.

SE Bedroom 13-0 x 10-5

C Secure loose electrical receptacles. BMC 16.04.060(b)

Egress Window Measurements
Height: 28 inches
Width: 38 inches
Sill Height: 20 inches
Openable Area: 7.39 sq. ft.

Note: These measurements are for reference only. There is no violation of the emergency egress requirements.

Basement(Furnace)

C Properly secure all support posts at the top and bottom to eliminate the possibility of movement. BMC 16.04.060(b)

C Replace the missing smoke detector. The missing smoke detector was hard wired and must be replaced with a hard wired model. IC 22-11-18-3.5

Repair/replace the West concrete block wall of the basement. It is severely bowed in and has a large gap in the horizontal mortar joint. BMC 16.04.060(b)

812-825-2758 Teresa

EXTERIOR

C Secure the front porch handrail so it is capable of withstanding normally imposed loads. BMC 16.04.050(b)

C Trim all tree branches away from the siding and roofline to maintain a 3' clearance. This is referring to the overgrowth of bamboo on the west side coming from the adjacent property. BMC 16.04.040(e)

C Properly secure loose shingles, and/or replace damaged or missing shingles on structure. BMC 16.04.050(a)

OTHER REQUIREMENTS

Furnace Inspection Documentation

Thoroughly clean and service the furnace, inspect and test shut off valves for proper operation. Documentation from a professional HVAC contractor for this service is acceptable and encouraged. Servicing shall include a test for carbon monoxide. Acceptable levels of carbon monoxide are as follows:

C Disconnected Heat No furnace

Desired level: 0 parts per million (ppm)
Acceptable level in a living space: 9 ppm
Maximum concentration for flue products: 50 ppm
BMC 16.01.060(f), BMC 16.04.060(c), BMC 16.04.060(b)

Inventory Damage List

C The owner or his agent shall contact the tenant and arrange a joint inspection of the premises to occur within ten days of the tenant's occupancy of the rental unit. The owner or his agent and the tenant shall at that time jointly complete an inventory and damage list, and this shall be signed by all parties to the tenancy agreement. Duplicate copies of the inventory and damage list shall be retained by all parties and shall be deemed a part of the tenancy agreement. **A completed copy of the Inventory & Damage List must be provided to the office or reviewed with the inspector within 60 days of the date of the inspection or a $25.00 fine will be levied. BMC 16.03.050(e) and BMC 16.10.030(b)**

Tenants and Owners Rights and Responsibilities Summary

A completed copy of the Tenants and Owners Rights and Responsibilities Summary must be provided to this office or reviewed with the inspector **within 60 days of the date of the inspection or a $25.00 fine will be levied. BMC 16.03.060(c) and BMC 16.10.030(b)**

When issued, a copy of the new Rental Occupancy Permit shall be posted as required by BMC 16.03.030(d): All rental units shall be required to have a current occupancy permit displayed in an accessible location inside the unit. The permit shall contain the name of the owner and the agent, the occupant load of the unit, the number of bedrooms, the expiration date of the permit, and any variances that have been granted for the property. BMC 16.03.030(c)

This is the end of this report.

City of Bloomington
H.A.N.D.

Board of Housing Quality Appeals
Staff Report: Petition to Rescind Variance

Meeting Date: July 19, 2017

Petition Type: Rescind a variance

Petition Number: 17-RV-104

Address: 1955 N. College Avenue

Petitioner: HAND

Inspector: Jo Stong

Staff Report: This property was previously granted variances to the minimum ceiling height requirements and the minimum number of receptacles required in a kitchen of the Property Maintenance Code. The Residential Rental and Lodging Establishment Inspection Program does not include a ceiling height or minimum number of receptacles requirement and the Building Code in place at the time of construction (1955) did not address ceiling height or minimum number of receptacles; therefore we are asking the Board to rescind the variance.

Staff Recommendation: Rescind the variance.

Conditions: None

Attachments: None

City of Bloomington
H.A.N.D.

Board of Housing Quality Appeals
Staff Report: Petition to Rescind Variance

Meeting Date:	19 July 2017	
Petition Type:	Rescind a variance	
Petition Number:	17-RV-105	
Address:	1401-1403 S. Washington St.	
Petitioner:	HAND	
Inspector:	Michael Arnold	
Staff Report:	09 August 2017	Cycle Inspection
	31 August 2017	Temporary Permit
	13 June 2017	EE Reminder
	13 June 2017	BHQA Application Creared

This property was previously granted a variance to pass through requirements and specific basement shower and washing machine plumbing requirements of the Property Maintenance Code. The Residential Rental and Lodging Establishment Inspection Program does not include pass through requirements and specific basement shower and washing machine plumbing requirements and the Building Code in place at the time of construction did not address pass through requirements and specific basement shower and washing machine plumbing requirements; therefore we are asking the Board to rescind this variance. This structure was built in 1930.

Staff Recommendation: Rescind the variance.

Conditions: None

Attachments: None

City of Bloomington
H.A.N.D.

Board of Housing Quality Appeals
Staff Report: Petition for Extension of Time

Meeting Date:	July 19, 2017	
Petition Type:	An extension of time to complete repairs	
Petition Number:	17-TV-106	
Address:	125 E. 10th Street	
Petitioner:	Michael Ho (maintenance for Omega Properties)	
Inspector:	John Hewett	
Staff Report:	January 3, 2017	Cycle inspection
	March 13, 2017	Sent report
	May 12, 2017	Scheduled re-inspection for June 19, 2017
	June 15, 2017	Received appeal for exterior items.
	June 19, 2017	Re-inspected, only exterior violations remain.

We noted a number of exterior items on the Cycle inspection. These include rotted deck boards, loose handrails, loose/broken siding and exterior painting. All interior items are complied. The petitioner has asked for an extension until September 30, 2017.

Staff recommendation: Grant an extension of time

Conditions:	Complete all repairs and schedule for re-inspection no later than the deadline stated below, or this case will be turned over to the City of Bloomington Legal Department for further action including the possibility of fines.
Compliance Deadline:	September 30, 2017
Attachments:	Cycle report, appeal

RECEIVED
JUN 15 2017

Application for Appeal
To The
Board of Housing Quality Appeals
P.O. Box 100
Bloomington, IN 47402
812-349-3420
hand@bloomington.in.gov

Property Address: 125 E 10th. St

Petitioner's Name: Michael Ito

Address: 3455 E Betard LN

City: Bton State: IN Zip Code: 47408

Phone Number: (812) 345-1544 Email Address: homichael1230@gmail.com

Property Owner's Name: Mary Friedman

Address: 629 Woodcrest Dr

City: Bton State: IN Zip Code: 47401

Phone Number: 812-333 0995 Email Address:

Occupants:

The following conditions must be found in each case in order for the Board to consider the request:

1. That the exception is consistent with the intent and purpose of the housing code and promotes public health, safety and general welfare.
2. That the value of the area about the property to which the exception is to apply will not be adversely affected.

Please circle the petition type that you are requesting:

A) An extension of time to complete repairs (Petition type TV)

B) A modification or exception to the Residential Rental Unit and Lodging Establishment Inspection Program (Petition type V)

C) Relief from an administrative decision (Petition type AA)

D) Rescind a variance (Petition type RV)

REMINDER: A $20 filing fee must be submitted with this application before the property can be placed on the meeting agenda.

OFFICE USE ONLY
Petition Number 17-TV-106

SEE REVERSE

Please provide details regarding your request below; you may attach any exhibits or additional comments as you deem necessary and pertinent to your request. Be specific as to what you are requesting, the reason or justification for your request, the amount of time needed to bring the property into compliance, and any modifications and/or alterations you are suggesting.

- Deck - secure guardrail, replace any deckboards
- Repair hole in siding W. side adjacent to window
- Repair loose siding south gable
- Scrape & Paint exterior surfaces

Repair time ~~[illegible]~~ 30 9/30/17, turning season is upon us and we are swamped.

Signature (required): Michael Ho

Name (please print): Michael Ho Date: 6/15/17

You may attend the meeting. If you attend, please note that all petitioners presenting a matter to the Board shall be limited to no more than five minutes to present their case and arguments. Additional time can be granted if deemed appropriate by the Board. Please note that if your property is listed on the consent agenda it is more likely than not that your property will not be individually discussed during the Board's meeting.

City Of Bloomington
Housing and Neighborhood Development

RENTAL PERMIT INFORMATION

MAR 1 3 2017

Robert A. Friedman
115 E. 6th Street, Suite 1
Bloomington, IN 47408

Property Location: 125 E 10th ST

Please find enclosed the Cycle Inspection Report which details recommendations and violations found during the recent inspection of your rental property. You have sixty (60) days from the date of this letter to correct the violations listed on the report.

Once violations have been corrected, it is your responsibility to call the Housing and Neighborhood Development office by MAY 1 2 2017 to schedule a re-inspection. You have the right to appeal any violation to the Board of Housing Quality Appeals. An appeal form can be found at www.bloomington.in.gov/hand. If you do not have access to the internet, you may contact HAND at 812-349-3420 and a form will be provided.

This report is issued in accordance with BMC 16.10.020(a) and 16.10.040(a) of the Residential Rental Unit and Lodging Establishment Inspection Program. Residential Rental Occupancy Permits will not be issued until all interior and exterior violations have been corrected, and all fees have been paid. Please be advised that non-compliance by the deadlines listed in this letter can limit the permit period to a maximum of three (3) years. A copy of the Notice of Fees can be found at www.bloomington.in.gov/hand. If you do not have access to the internet, you may contact HAND at 349-3420 and a form will be provided.

If your address has changed since your last inspection, please submit a new registration form to the HAND Department. You can find the registration form online at the website listed above. If you do not have internet access, you may contact HAND at 812-349-3420 and a form will be mailed.

If you have any questions regarding the permit process, please call weekdays between 8:00 a.m. and 5:00 p.m., at (812) 349-3420.

Sincerely,

Housing & Neighborhood Development
Encl:Inspection Report,
Xc:Omega Properties: 115 E. 6th Street, Suite 1, Bloomington, IN 47408

JJ

City Of Bloomington
Housing and Neighborhood Development

CYCLE INSPECTION REPORT

3547

Owner(s)
Robert A. Friedman
115 E. 6th Street, Suite 1
Bloomington, IN 47408

Agent
Omega Properties
115 E. 6th Street, Suite 1
Bloomington, IN 47408

Prop. Location: 125 E 10th ST
Number of Units/Structures: 1/1
Units/Bedrooms/Max # of Occupants: Bld 1: 1/5/5

Date Inspected: 01/03/2017
Primary Heat Source: Gas
Property Zoning: RM
Number of Stories: 2

Inspector: John Hewett
Foundation Type: Basement
Attic Access: No
Accessory Structure:

Monroe County Assessor's records indicate this structure was built in 1899 with an addition of the deck in 1992. There were no requirements for emergency egress at the time of construction.

Interior

Kitchen
14-0 x 10-0
No violations noted.

Bathroom
No violations noted.

Dining room
16-0 x 12-0
No violations noted.

Living room
16-5 x 12-4
The fireplace is sealed.
No violations noted.

C Entry
Replace the broken stair spindles. BMC 16.04.060(a)

W Bedroom
12-0 x 10-6
Provide operating power to smoke detector. IC 22-11-18-3.5

Existing Egress Window Measurements:
Height: 31.5 inches
Width: 35 inches
Sill Height: 27 inches
Openable Area: 7.66 sq. ft.

Note: These measurements are for reference only. There is no violation of the emergency egress requirements.

2nd Floor
SW bedroom12-0 x 10-0, NE bedroom 14-9 x 12-7
Existing Egress Window Measurements:
Height: 31.5 inches
Width: 35 inches
Sill Height: 9 inches
Openable Area: 7.66 sq. ft.

Note: These measurements are for reference only. There is no violation of the emergency egress requirements.

SE bedroom
13-8 x 12-6
This room has a door to the exterior for emergency egress.
No violations noted.

Deck
Secure the loose guardrail. BMC 16.04.050(a)

Replace any rotted deck boards. BMC 16.04.050(a)

NW bedroom
12-6 x 11-8
The smoke detector has been taken from its mounting ring. Replace the smoke detector on the mounting ring. IC 22-11-18-3.5

Existing Egress Window Measurements:
Height: 35 inches
Width: 24 inches
Sill Height: 21 inches
Openable Area: 5.83 sq. ft.

Note: These measurements are for reference only. There is no violation of the emergency egress requirements.

Laundry/Bath
No violations noted.

Basement
Furnace is located here.
No violations noted.

Exterior

Repair the hole in the siding on the west side adjacent to the small window. BMC 16.04.050(a)

Repair the loose siding on the south gable adjacent to the deck. BMC 16.04.05(a)

Scrape and paint exterior surfaces where paint is peeling or wood is exposed. (Deck Guard rail) BMC 16.04.050(e)

When issued, a copy of the new Rental Occupancy Permit shall be posted as required by BMC 16.03.030(d): All rental units shall be required to have a current occupancy permit displayed in an accessible location inside the unit. The permit shall contain the name of the owner or his agent and the expiration date of the permit. BMC 16.03.030(c)

This is the end of this report.

City of Bloomington
H.A.N.D.

Board of Housing Quality Appeals
Staff Report: Petition for Extension of Time

Meeting Date:	July 19, 2017
Petition Type:	An extension of time to complete repairs
Petition Number:	17-TV-107
Address:	2708 S. Rogers Street
Petitioner:	Kelly Harding
Inspector:	Jo Stong
Staff Report:	June 1, 2017: Received complaint about property from tenants June 5, 2017: Conducted complaint inspection with tenants June 7, 2017: Mailed complaint report June 15, 2017: Received appeal

During a complaint inspection of the above property several violations of the Residential Rental Unit and Lodging Establishment Inspection Program were noted. The petitioner is requesting an extension of time to complete the necessary repairs, indicating that the property is "being removed as a rental property and is to be sold."

Staff recommendation:	Grant an extension of time
Conditions:	Complete all repairs and schedule for re-inspection no later than the deadline stated below, or this case will be turned over to the City of Bloomington Legal Department for further action including the possibility of fines.
Compliance Deadline:	July 31, 2017
Attachments:	Complaint inspection report, photos, appeal

CITY OF BLOOMINGTON INDIANA

Application for Appeal
To The
Board of Housing Quality Appeals
P.O. Box 100
Bloomington, IN 47402
812-349-3420
hand@bloomington.in.gov

RECEIVED
JUN 1 8 2017
BY: .....

Property Address: 2708 S. Rogers, Blgtn, IN 47404

Petitioner's Name: Kelly Harding

Address: 608 W. Kirkwood Ave

City: Blgtn State: IN Zip Code: 47404

Phone Number: 812 345 6813 Email Address: kellyaharding@yahoo.com

Property Owner's Name: Kelly Harding

Address: Same

City: _____ State: _____ Zip Code: _____

Phone Number: _____ Email Address: _____

Occupants: Barbara Parrish, Heather (unsure of last name

The following conditions must be found in each case in order for the Board to consider the request:

1. That the exception is consistent with the intent and purpose of the housing code and promotes public health, safety and general welfare.
2. That the value of the area about the property to which the exception is to apply will not be adversely affected.

Please circle the petition type that you are requesting:

A) An extension of time to complete repairs (Petition type TV)

B) A modification or exception to the Residential Rental Unit and Lodging Establishment Inspection Program (Petition type V)

C) Relief from an administrative decision (Petition type AA)

D) Rescind a variance (Petition type RV)

REMINDER: A $20 filing fee must be submitted with this application before the property can be placed on the meeting agenda.

OFFICE USE ONLY
Petition Number 17-TV-107

SEE REVERSE

Please provide details regarding your request below; you may attach any exhibits or additional comments as you deem necessary and pertinent to your request. Be specific as to what you are requesting, the reason or justification for your request; the amount of time needed to bring the property into compliance, and any modifications and/or alterations you are suggesting.

This property is being removed as a rental property + is to be sold. Property is currently being shown for sale.

Signature (required): Kelly A. Harding

Name (please print): Kelly A. Harding Date: 6/15/17

You may attend the meeting. If you attend, please note that all petitioners presenting a matter to the Board shall be limited to no more than five minutes to present their case and arguments. Additional time can be granted if deemed appropriate by the Board. Please note that if your property is listed on the consent agenda it is more likely than not that your property will not be individually discussed during the Board's meeting.

City Of Bloomington
Housing and Neighborhood Development

JUN 0 7 2017

Harding, Kelly A.
608 W Kirkwood Ave
Bloomington, IN 47404

RE:NOTICE OF COMPLAINT INSPECTION

Dear Harding, Kelly A.

On 06/05/2017 a complaint inspection was performed at 2708 S Rogers ST. During the inspection violations of the Residential Rental Unit and Lodging Establishment Inspection Program were found.

Please correct the violations cited on the enclosed inspection report within fourteen days (14) and call this office no later than JUN 2 1 2017, to schedule the required re-inspection. Our mailing address and telephone number are listed below.

This directive is issued in accordance with Sections BMC 16.03.040 (c) and 16.10.040 (a) of the Residential Rental Unit and Lodging Establishment Inspection Program of Bloomington. You have the right to appeal to the Board of Housing Quality Appeals. If you need more than fourteen (14) days to correct the violations, or if you want to appeal any violation, an appeal form can be found at www.bloomington.in.gov/hand. If you do not have access to the internet, you may contact HAND at 812-349-3420 and a form will be provided.

Please remember, it is your responsibility to contact the Housing and Neighborhood Development Department to schedule the required re-inspection.

Sincerely,

Housing & Neighborhood Development
Encl:Inspection Report,

8

City Of Bloomington
Housing and Neighborhood Development

COMPLAINT INSPECTION REPORT

6782

Owner
Harding, Kelly A.
608 W Kirkwood Ave
Bloomington, IN 47404

Tenant
Barbara Parrish
2708 S. Rogers Street
Bloomington, IN 47403

Prop. Location: 2708 S Rogers ST
Number of Units/Structures: 1/1
Units/Bedrooms/Max # of Occupants: Bld 1: 1/4/3

Date Inspected: 06/05/2017
Primary Heat Source: Gas
Property Zoning: RS
Number of Stories: 1

Inspector: Jo Stong
Foundation Type: Basement
Attic Access: Yes
Accessory Structure: None

Rental occupancy permit is for the first floor unit only. Second floor apartment not approved to occupy or be used as rental.

The following items are the result of a complaint inspection conducted on **June 5, 2017**. It is your responsibility to repair these items and to schedule a re-inspection within **fourteen (14)** days of the mailing of this report. Failure to comply with this inspection report will result in this matter being referred to the City of Bloomington Legal Department. Failure to comply with this complaint inspection report may result in fines. If you have questions regarding this report, please contact this office at 349-3420.

INTERIOR:

Entire Unit:
Repair the central air conditioner to function as intended. BMC 16.04.060(c)

Living Room:
Repair the broken storm window. BMC 16.04.060(a)

Kitchen:
Properly repair or replace the leaking drain pipe under the sink in a workmanlike manner. Eliminate the use of tape. BMC 16.04.060(c)

Half Bath:
Eliminate the leak at the hot water shutoff to the sink. BMC 16.04.060(c)

Hallway, Mud Room:
Determine the sources and eliminate the water leaks in the ceiling. BMC 16.04.060(a)

Repair and properly surface-coat the ceiling and walls damaged by leaks. BMC 16.04.060(a)

Replace the door to the north-center bedroom that was reportedly damaged by the water leak. BMC 16.04.060(a)

BASEMENT
Repair or replace the sump pump so that it functions as intended. BMC 16.04.060(c)

EXTERIOR:

Repair or replace the roof so that there are no leaks into the interior. BMC 16.04.050(a)

Properly secure all guttering to the structure (gutters pulling away in several locations; tenant reports that water pours onto front steps in rain). BMC 16.04.050(a)

Properly seal the soffit on the front porch. BMC 16.04.050(a)

Properly repair the leak in the front porch roof. BMC 16.04.050(a)

Repair and properly surface-coat the ceiling of the front porch roof that has been damaged by leaks. BMC 16.04.050(a)

Replace the missing downspout on the east-northeast side. BMC 16.04.050(a)

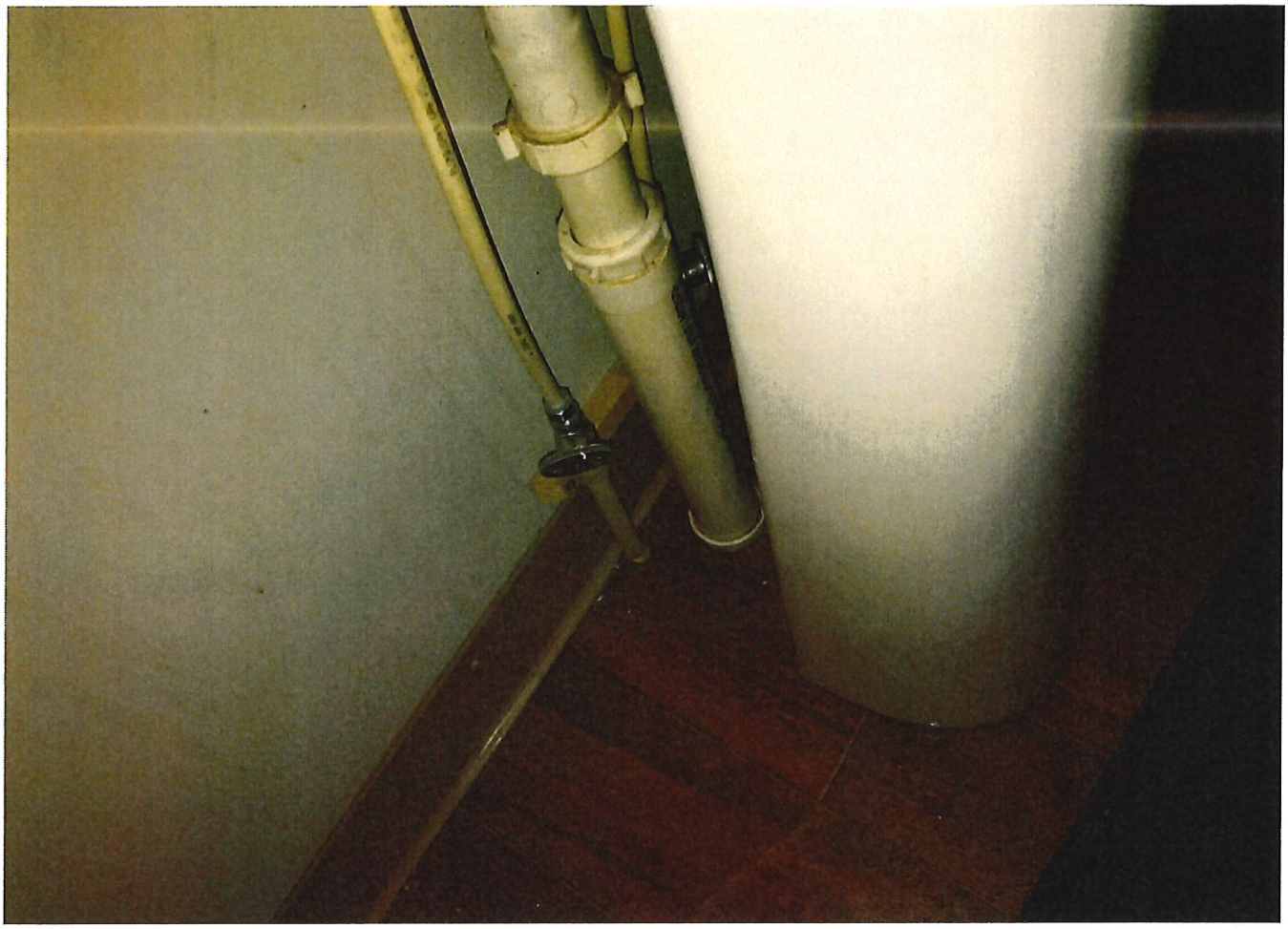

City of Bloomington
H.A.N.D.

Board of Housing Quality Appeals
Staff Report: Petition for Extension of Time

Meeting Date: July 19, 2017

Petition Type: An extension of time to complete repairs

Petition Number: 17-TV-108

Address: 721 N. Fairview Street

Petitioner: Jane Klausmeier

Inspector: Jo Stong

Staff Report: March 22, 2017: Conducted cycle inspection
March 29, 2017: Mailed report
May 22, 2017: Owner scheduled reinspection for June 26, 2017
June 19, 2017: Received Tenants' and Owners's Rights & Responsibilities and furnace docs and complied them on cycle report. Received appeal, canceled scheduled reinspection

During a cycle inspection of the above property violations of the Residential Rental Unit and Lodging Establishment Inspection Program were noted. The petitioner is requesting an extension of time until September 1, 2017 to complete repairs. The lease for the current tenant expires on August 4, 2017 and the repairs will be made after the tenant moves out.

Staff recommendation: Grant an extension of time

Conditions: Complete all repairs and schedule for re-inspection no later than the deadline stated below, or this case will be turned over to the City of Bloomington Legal Department for further action including the possibility of fines.

Compliance Deadline: August 2, 2017 for all life-safety violations
September 1, 2017 for all other violations

Attachments: Cycle report with life-safety issues highlighted (and complied items noted), appeal

JA

RECEIVED
BY: .....

Application for Appeal
To The
Board of Housing Quality Appeals
P.O. Box 100
Bloomington, IN 47402
812-349-3420
hand@bloomington.in.gov

Property Address: 721 N. Fairview St.

Petitioner's Name: Jane Klausmeier

Address: 822 River Road

City: Spencer State: IN Zip Code: 47460

Phone Number: 812-671-5855 Email Address: elfin15@hotmail.com

Property Owner's Name: Same

Address:

City: State: Zip Code:

Phone Number: Email Address:

Occupants:

The following conditions must be found in each case in order for the Board to consider the request:

1. That the exception is consistent with the intent and purpose of the housing code and promotes public health, safety and general welfare.
2. That the value of the area about the property to which the exception is to apply will not be adversely affected.

Please circle the petition type that you are requesting:

A) An extension of time to complete repairs (Petition type TV)

B) A modification or exception to the Residential Rental Unit and Lodging Establishment Inspection Program (Petition type V)

C) Relief from an administrative decision (Petition type AA)

D) Rescind a variance (Petition type RV)

REMINDER: A $20 filing fee must be submitted with this application before the property can be placed on the meeting agenda.

OFFICE USE ONLY

Petition Number 17-TV-108

SEE REVERSE

Please provide details regarding your request below; you may attach any exhibits or additional comments as you deem necessary and pertinent to your request. Be specific as to what you are requesting, the reason or justification for your request; the amount of time needed to bring the property into compliance, and any modifications and/or alterations you are suggesting.

Current ~~[illegible]~~ tenant's lease expires 8/4/17
I would like additional repaint time/paperwork time
to complete when tenant has vacated the property.
If I could have reinspection appt. extended to
on or about 9/1/17, I think would be wonderful.

Signature (required): [signature]

Name (please print): Jane Klausmeier Date: 6/19/17

You may attend the meeting. If you attend, please note that all petitioners presenting a matter to the Board shall be limited to no more than five minutes to present their case and arguments. Additional time can be granted if deemed appropriate by the Board. Please note that if your property is listed on the consent agenda it is more likely than not that your property will not be individually discussed during the Board's meeting.

City Of Bloomington
Housing and Neighborhood Development

RENTAL PERMIT INFORMATION

Klausmeier, Jane A.
822 River Road
Spencer, IN 47460

Property Location: 721 N Fairview ST

Please find enclosed the Cycle Inspection Report which details recommendations and violations found during the recent inspection of your rental property. You have sixty (60) days from the date of this letter to correct the violations listed on the report.

Once violations have been corrected, it is your responsibility to call the Housing and Neighborhood Development office by to schedule a re-inspection. You have the right to appeal any violation to the Board of Housing Quality Appeals. An appeal form can be found at www.bloomington.in.gov/hand. If you do not have access to the internet, you may contact HAND at 812-349-3420 and a form will be provided.

This report is issued in accordance with BMC 16.10.020(a) and 16.10.040(a) of the Residential Rental Unit and Lodging Establishment Inspection Program. Residential Rental Occupancy Permits will not be issued until all interior and exterior violations have been corrected, and all fees have been paid. Please be advised that non-compliance by the deadlines listed in this letter can limit the permit period to a maximum of three (3) years. A copy of the Notice of Fees can be found at www.bloomington.in.gov/hand. If you do not have access to the internet, you may contact HAND at 349-3420 and a form will be provided.

If your address has changed since your last inspection, please submit a new registration form to the HAND Department. You can find the registration form online at the website listed above. If you do not have internet access, you may contact HAND at 812-349-3420 and a form will be mailed.

If you have any questions regarding the permit process, please call weekdays between 8:00 a.m. and 5:00 p.m., at (812) 349-3420.

Sincerely,

Housing & Neighborhood Development
Encl:Inspection Report,

City Of Bloomington
Housing and Neighborhood Development

CYCLE INSPECTION REPORT

2188

Owner
Klausmeier, Jane A.
822 River Road
Spencer, IN 47460

Prop. Location: 721 N Fairview ST
Number of Units/Structures: 1/1
Units/Bedrooms/Max # of Occupants: Bld 1: 1/2/3

Date Inspected: 03/22/2017
Primary Heat Source: Gas
Property Zoning: RC
Number of Stories: 1

Inspector: Jo Stong
Foundation Type: Basement
Attic Access: Yes
Accessory Structure: None

Upper level is not approved for sleeping purposes or as habitable space.

Monroe County Assessor's records indicate this structure was built in 1899.
There were no requirements for emergency egress at the time of construction.

INTERIOR:

Room dimensions are in the file and are not included in this report.

Entry Porch:
Scrape and paint windows where paint is peeling or bare surfaces are exposed (sills, mullions, etc). BMC 16.04.060(f)

Living Room, Southeast (front) Bedroom:
No violations noted.

Existing Egress Window Measurements (double-hung):
Height: 30 inches
Width: 27 inches
Sill Height: 17 inches
Openable Area: 5.62 sq. ft.
Note: These measurements are for reference only. There is no violation of the emergency egress requirements.

Half Bath:
No violations noted.

Kitchen:
The smoke detector in this room appears to be more than ten years old and the manufacturer will not guarantee it to provide adequate protection. Install a new smoke detector in an approved location. If wall mounted, it shall be located between 6 and 12 inches from the ceiling. If ceiling mounted, it shall be located at least 4 inches from the wall. IC 22-11-18-3.5

NOTE: It is recommended that the smoke detector be relocated away from the kitchen to prevent nuisance tripping.

Repair the faucet sprayer on the sink to function as intended by the manufacturer, or remove and properly terminate the line for the sprayer. BMC 16.04.060(c)

Properly re-caulk the countertop behind the sink to eliminate water infiltration. BMC 16.04.060(a)

Properly secure the loose/sagging ceiling tiles. BMC 16.04.060(a)

Attic:
No violations noted.

Northwest (rear) Bedroom:
The smoke detector in this room appears to be more than ten years old and the manufacturer will not guarantee it to provide adequate protection. Install a new smoke detector in an approved location. If wall mounted, it shall be located between 6 and 12 inches from the ceiling. If ceiling mounted, it shall be located at least 4 inches from the wall. IC 22-11-18-3.5

Existing Egress Window Measurements (double-hung):
Height: 19 inches
Width: 27 ½ inches
Sill Height: 45 inches
Openable Area: 3.63 sq. ft.

At the time this structure was built, there were no code requirements for emergency egress for a sleeping room. The Housing & Neighborhood Development Department strongly recommends that the sleeping room egress windows be modified or replaced with a larger window to aid in emergency escape.

Rear Bath:
Repair or replace the damaged tub surround. BMC 16.04.060 (a), (c)

Replace non-functioning or incorrectly wired GFCI receptacle, per Indiana Electric Code requirements. BMC 16.04.020 (IEC 210.8) and BMC 16.04.060(b)

Paint the ceiling where paint is peeling. BMC 16.04.060(f)

BASEMENT (gas furnace here)
See Other Requirements at the end of the report for required furnace documentation.

Repair the furnace to function as intended (fan runs continuously). BMC 16.04.060(c)

Provide operating power to smoke detector. IC 22-11-18-3.5

EXTERIOR:

The roof is sagging and deteriorated. It is strongly recommended that the roof be replaced before the next cycle inspection.

No violations noted.

OTHER REQUIREMENTS:

Furnace Inspection Documentation
Thoroughly clean and service the furnace, inspect and test shut off valves for proper operation. Documentation from a professional HVAC contractor for this service is acceptable and encouraged. **Servicing shall include a test for carbon monoxide**. Acceptable levels of carbon monoxide are as follows:

Desired level:	0 parts per million (ppm)
Acceptable level in a living space:	9 ppm
Maximum concentration for flue products:	50ppm BMC 16.01.060(f), BMC 16.04.060(b), (c)

Registration Form
Complete the enclosed registration form. A street address is required for both owner and agent. **This form must be signed by the owner. If this form is not provided to the HAND department by the compliance deadline and the matter is referred to the Legal Department a fine of $25 will be assessed.** BMC 16.03.020, BMC 16.10.030(b)

Tenants and Owners Rights and Responsibilities Summary
A completed copy of the Tenants and Owners Rights and Responsibilities Summary must be provided to this office or reviewed with the inspector **within 60 days of the date of the inspection or a $25.00 fine will be levied. BMC 16.03.060(c) and BMC 16.10.030(b)**

Inventory & Damages List
The owner or his agent shall contact the tenant and arrange a joint inspection of the premises to occur within ten days of the tenant's occupancy of the rental unit. The owner or his agent and the tenant shall at that time jointly complete an inventory and damage list, and this shall be signed by all parties to the tenancy agreement. Duplicate copies of the inventory and damage list shall be retained by all parties and shall be deemed a part of the tenancy agreement. **A completed copy of the Inventory & Damage List must be provided to the office or reviewed with the inspector within 60 days of the date of the inspection or a $25.00 fine will be levied. BMC 16.03.050(e) and BMC 16.10.030(b)**

When issued, a copy of the new Rental Occupancy Permit shall be posted as required by BMC 16.03.030(d): All rental units shall be required to have a current occupancy permit displayed in an accessible location inside the unit. The permit shall contain the name of the owner and the agent, the occupant load of the unit, the number of bedrooms, the expiration date of the permit, and any variances that have been granted for the property. BMC 16.03.030(c)

Thank you for your cooperation in the Residential Rental Occupancy Permit Program.

This is the end of this report.

City of Bloomington
H.A.N.D.

Board of Housing Quality Appeals
Staff Report: Petition for Extension of Time

Meeting Date:	July 19, 2017
Petition Type:	An extension of time to complete repairs.
Petition Number:	17-TV-109
Address:	522 S. Mitchell St.
Petitioner:	Sarah Williamson (Orion Property Mgmt.)
Inspector:	Norman Mosier
Staff Report:	April 18, 2017 – Conducted Cycle Inspection May 2, 2017 – Petitioner Scheduled Re-inspection on 06/20/2017 @ 2:30. June 19, 2017 – Received BHQA Appeal for Extension of Time and Cancelled Re-inspection of 06/20/2017.

Petitioner is requesting an extension of time to complete/upgrade the repairs on the Cycle Report of approximately 2 weeks. Petitioners is currently working on the repairs.

Staff recommendation: Grant the request.

Conditions: Complete all repairs and schedule for re-inspection no later than the deadline stated below, or this case will be turned over to the City of Bloomington Legal Department for further action, including, but not limited to, the possibility of fines.

Compliance Deadline: July 31, 2017 – For Life Safety Violations, marked with check mark.
September 19, 2017 – For all other violations.

Attachments: Cycle Report, BHQA Appeal. Petitioner's Letter

RECEIVED
JUN 19 2017
BY: .....

CITY OF BLOOMINGTON INDIANA

Application for Appeal
To The
Board of Housing Quality Appeals
P.O. Box 100
Bloomington, IN 47402
812-349-3420
hand@bloomington.in.gov

Property Address: 522 S Mitchell Street

Petitioner's Name: Sarah Williamson (Orion Property Management)

Address: 400 W 7th Street, Suite 106

City: Bloomington **State:** IN **Zip Code:** 47404

Phone Number: 812-334-5964 **Email Address:** swilliamson@orionpropertymanagement.com

Property Owner's Name: Eric Grotness

Address: 14209 Sugar Creek Rd

City: Fort Wayne **State:** IN **Zip Code:** 46814

Phone Number: 260-403-1970 **Email Address:** _____

Occupants: _____

The following conditions must be found in each case in order for the Board to consider the request:

1. That the exception is consistent with the intent and purpose of the housing code and promotes public health, safety and general welfare.
2. That the value of the area about the property to which the exception is to apply will not be adversely affected.

Please circle the petition type that you are requesting:

(A) An extension of time to complete repairs (Petition type **TV**)

B) A modification or exception to the Residential Rental Unit and Lodging Establishment Inspection Program (Petition type **V**)

C) Relief from an administrative decision (Petition type **AA**)

D) Rescind a variance (Petition type **RV**)

REMINDER: A $20 filing fee must be submitted with this application before the property can be placed on the meeting agenda.	OFFICE USE ONLY Petition Number 17-TV-109

SEE REVERSE

Please provide details regarding your request below; you may attach any exhibits or additional comments as you deem necessary and pertinent to your request. Be specific as to what you are requesting, the reason or justification for your request, the amount of time needed to bring the property into compliance, and any modifications and/or alterations you are suggesting.

There were several items that needed repaired/upgraded. We have not had time to complete the repairs. We are working on the project now and need a week or two to complete.

Signature (required): [signature]

Name (please print): Keith R. Williamson **Date:** 6-19-17

You may attend the meeting. If you attend, please note that all petitioners presenting a matter to the Board shall be limited to no more than five minutes to present their case and arguments. Additional time can be granted if deemed appropriate by the Board. Please note that if your property is listed on the consent agenda it is more likely than not that your property will not be individually discussed during the Board's meeting.

City Of Bloomington
Housing and Neighborhood Development
CYCLE INSPECTION REPORT

9734

Owner(s)
Erik T. Grotness
14209 Sugar Creek Rd
Fort Wayne, IN 46814

Agent
Keith R. Williamson
400 W. 7th St. Suite 106
Bloomington, IN 47404

Prop. Location: 522 S Mitchell ST
Number of Units/Structures: 1/1
Units/Bedrooms/Max # of Occupants: Bld 1: 1/4/3

Date Inspected: 04/18/2017
Primary Heat Source: Gas
Property Zoning: RC
Number of Stories: 2

Inspector: Norman Mosier
Foundation Type: Basement
Attic Access: Yes
Accessory Structure: None

Monroe County Assessor's records indicate this structure was built in 1948.
There were no requirements for emergency egress at the time of construction.

Conditions were noted during the cycle inspection that may indicate this property is over occupied and in violation of the Bloomington Municipal Code (BMC) Title 20. This property shall be brought into compliance with Title 20 requirements within 60 days of the date of this inspection to avoid possible legal action by the City of Bloomington Legal Department.

INTERIOR:

MAIN LEVEL

Entryway:

No violations noted.

Living Room 21-5 x 13-2:

Show documentation that the fireplace has been inspected within the last twelve months, and that it is safe for use, or permanently and visibly seal the fireplace to prevent its use. Service and inspection shall include the firebox, damper, chimney and/or flue. Cleaning by a professional service is highly recommended. BMC 16.01.060(f)

Dining Room 12-1 x 11-3:

No violations noted.

Family Room 20-4 x 11-9:

Replace the missing knob on the storm door and repair the storm door to latch properly. BMC 16.04.060 (a)

Back Porch:

Secure the loose handrails. BMC 16.04.050(b)

Kitchen13-2 x 8, Hallway:

No violations noted.

SE Bedroom 12-6 x 9-11:

Repair the door to fit the door jamb and to latch properly. BMC 16.04.060 (a)

Properly ground the electrical receptacles. If the receptacles are on an ungrounded system, it is acceptable to install 2-pole, ungrounded receptacles, or GFCI receptacles. If GFCI receptacles are installed, label receptacles with the wording "no equipment ground." BMC 16.04.020(a)(5); 2009 IEC Article 406.3(B)

Existing Egress Window Measurements: Dbl hung pop out: Const. Yr. - 1948

Height: 49.5 inches
Width: 27 inches
Sill Height: 27 inches
Openable Area: 9.28 sq. ft.

Note: These measurements are for reference only. There is no violation of the emergency egress requirements.

Hall Bath:

Interior walls shall be free of holes, cracks, peeling paint and/or deteriorated drywall/plaster, north, east, and west walls adjacent to the door. BMC 16.04.060 (a)

Replace the deteriorated vanity cabinet. BMC 16.04.060 (c)

Determine the source and eliminate the water leak under the sink. BMC 16.04.060(a)

Repair/replace the loose toilet paper holder. BMC 16.04.060 (a)

SW Bedroom 12-2 x 9-11: **Same window as above.**

No violations noted.

BASEMENT

Stairway:

No violations noted.

Main Room: See other requirements.

Properly secure all support posts at the top and bottom to eliminate the possibility of movement. BMC 16.04.060(b)

NE Room:

No violations noted.

2nd LEVEL

Stairway/Hallway, Attic:

No violations noted.

N Bedroom 13-3 x 12-5:

No violations noted.

Existing Egress Window Measurements: Dbl hung pop out: Const. Yr. - 1948

Height: 37 inches
Width: 27 inches
Sill Height: 42 inches
Openable Area: 6.94 sq. ft.

Note: These measurements are for reference only. There is no violation of the emergency egress requirements.

Hall Bath:

Secure the loose north sink faucet handle. BMC 16.04.060 (a)

Toilet Room:

Repair the exhaust fan to function as intended, rattles. BMC 16.04.060 (c)

Repair the tub drain to function as intended, slow. BMC 16.04.060(c)

S Bedroom 16-3 x 10: **Same window as above.**

Repair the door to fit the door jamb and to latch properly. BMC 16.04.060 (a)

Garage:

No violations noted.

EXTERIOR:

Trim all tree branches away from the siding and roofline to maintain a 3' clearance, south side of structure. BMC 16.04.040(e)

OTHER REQUIREMENTS:

When issued, a copy of the new Rental Occupancy Permit shall be posted as required by BMC 16.12.080 (b): All rental units shall be required to have a current occupancy permit displayed in an accessible location inside the unit. The permit shall contain the name of the owner or his agent and the expiration date of the permit. BMC 16.03.030(d)

This is the end of this report.

City of Bloomington
H.A.N.D.

Board of Housing Quality Appeals
Staff Report: Petition to Rescind Variance

Meeting Date:	July 19, 2017
Petition Type:	Rescind a variance.
Petition Number:	17-RV-110
Address:	315 N. Roosevelt ST
Petitioner:	HAND
Inspector:	Dee Wills
Staff Report:	June 06, 2017 Completed Cycle Inspection June 19, 2017 Application for Appeal

This property was previously granted a variance to the bathroom ceiling height requirements of the Property Maintenance Code. The Residential Rental and Lodging Establishment Inspection Program does not include a ceiling height requirement and the Building Code in place at the time of construction did not address ceiling height; therefore we are asking the Board to rescind this variance. This structure was built in 1950.

Staff Recommendation: Rescind the variance.

Conditions: None

Attachments: None

City of Bloomington
H.A.N.D.

Board of Housing Quality Appeals
Staff Report: Petition for Extension of Time

Meeting Date:	July 19, 2017
Petition Type:	An extension of time to complete repairs
Petition Number:	17-TV-111
Address:	907 W. Kirkwood Avenue
Petitioner:	Edna Morrison
Inspector:	Jo Stong
Staff Report:	April 20, 2017: Conducted cycle inspection April 24, 2017: Mailed inspection report and tenant violation report May 15, 2017: Received email from agent for owner: Tenant has moved out May 16, 2017: Conducted drive-by inspection, confirmed property is vacant: Tenant violation is complied June 19, 2017: Received appeal

During a cycle inspection of the above property violations of the Residential Rental Unit and Lodging Establishment Inspection Program were noted, including tenant violations. The tenant has moved out and the property is vacant. The petitioner is seeking an extension of time to complete repairs: Once the tenant vacated the property, more repairs were deemed necessary, including partial floor and wall replacement and extensive cleaning.

Staff recommendation:	Grant the extension of time
Conditions:	Complete all repairs and schedule for re-inspection no later than the deadline stated below, or this case will be turned over to the City of Bloomington Legal Department for further action including the possibility of fines.
Compliance Deadline:	September 19, 2017 or prior to occupancy of the property
Attachments:	Cycle report, Tenant Violation report, appeal

City Of Bloomington
Housing and Neighborhood Development

APR 2 5 2017

Edna L. Morrison
4375 W. Forrest Park Dr.
Bloomington, IN 47404

Steve Hamm
907 W. Kirkwood Avenue
Bloomington, IN 47404

RE: NOTICE OF TENANT VIOLATION INSPECTION

Dear Steve Hamm,

On 04/20/2017, a complaint inspection was performed at 907 W Kirkwood AVE. During the inspection violations of the Bloomington Housing Code were found. Enclosed is the inspection report which cites violations that are the responsibility of the resident(s) to correct. Please correct the violations within fourteen (14) days and contact this office no later than MAY 0 9 2017 to schedule the required re-inspection. Our mailing address and telephone number are listed below.

This directive is issued in accordance with BMC 16.10.020(a) and 16.10.040(a) of the Residential Rental Unit and Lodging Establishment Inspection Program. You have the right to appeal to the Board of Housing Quality Appeals. If you need more than fourteen (14) days to correct the violations, or if you want to appeal any violation, an appeal form can be found at www.bloomington.in.gov/hand. If you do not have access to the internet, you may contact HAND at 812-349-3420 and a form will be provided.

Please remember, it is your responsibility to contact the Housing and Neighborhood Development Office to schedule the required re-inspection.

Sincerely,

Housing & Neighborhood Development
Encl:Inspection Report,

City Of Bloomington
Housing and Neighborhood Development

TENANT VIOLATION INSPECTION REPORT

1185

Owner
Edna L. Morrison
4375 W. Forrest Park Dr.
Bloomington, IN 47404

Tenant
Steve Hamm
907 W. Kirkwood Avenue
Bloomington, IN 47404

Prop. Location: 907 W Kirkwood AVE
Number of Units/Structures: 1/1
Units/Bedrooms/Max # of Occupants: Bld 1: 1/3/3

Date Inspected: 04/20/2017
Primary Heat Source: Gas
Property Zoning: RC
Number of Stories: 1

Inspector: Jo Stong
Foundation Type: Crawl Space
Attic Access: No
Accessory Structure: None

During an inspection for renewal of the Rental Occupancy Permit on this property, violations were noted that are the responsibility of the tenant(s) to correct. The violations must be corrected and re-inspected for compliance with the Residential Rental Unit and Lodging Establishment Inspection Program within 14 days of the date on which this notice was mailed. It is the responsibility of the tenant to contact this office to schedule the required re-inspection at 349-3420. Any questions can be addressed to the inspector at 349-3420.

Failure to comply with the requirements of this notice will result in this matter being forwarded to the City's Legal Department for legal action and fines under the provisions of Title 16 of the Bloomington Municipal Code.

INTERIOR:

Entire Unit:
Remove all trash, litter and garbage from the property. Every occupant of a structure or part thereof shall keep that structure or part thereof which the tenant occupies, controls or uses in a clean and sanitary condition. BMC 16.04.060(d)

It is the determination of the code official that poor housekeeping has led to an insect infestation in this structure. The tenant shall take immediate action to exterminate the insects in this unit/structure via an approved process that will not be injurious to human health. After extermination, proper precautions shall be taken to prevent re-infestation. These precautions include but are not limited to keeping the interior of the unit/structure in a clean and sanitary condition. BMC 16.04.090(a) and (e)

This is the end of this report.

City Of Bloomington
Housing and Neighborhood Development

RENTAL PERMIT INFORMATION

APR 2 5 2017

Edna L. Morrison
4375 W. Forrest Park Dr.
Bloomington, IN 47404

Property Location: 907 W Kirkwood AVE

Please find enclosed the Cycle Inspection Report which details recommendations and violations found during the recent inspection of your rental property. You have sixty (60) days from the date of this letter to correct the violations listed on the report.

Once violations have been corrected, it is your responsibility to call the Housing and Neighborhood Development office by JUN 2 4 2017 to schedule a re-inspection. You have the right to appeal any violation to the Board of Housing Quality Appeals. An appeal form can be found at www.bloomington.in.gov/hand. If you do not have access to the internet, you may contact HAND at 812-349-3420 and a form will be provided.

This report is issued in accordance with BMC 16.10.020(a) and 16.10.040(a) of the Residential Rental Unit and Lodging Establishment Inspection Program. Residential Rental Occupancy Permits will not be issued until all interior and exterior violations have been corrected, and all fees have been paid. Please be advised that non-compliance by the deadlines listed in this letter can limit the permit period to a maximum of three (3) years. A copy of the Notice of Fees can be found at www.bloomington.in.gov/hand. If you do not have access to the internet, you may contact HAND at 349-3420 and a form will be provided.

If your address has changed since your last inspection, please submit a new registration form to the HAND Department. You can find the registration form online at the website listed above. If you do not have internet access, you may contact HAND at 812-349-3420 and a form will be mailed.

If you have any questions regarding the permit process, please call weekdays between 8:00 a.m. and 5:00 p.m., at (812) 349-3420.

Sincerely,

Housing & Neighborhood Development
Encl:Inspection Report,

23

City Of Bloomington
Housing and Neighborhood Development

CYCLE INSPECTION REPORT

1185

Owner
Edna L. Morrison
4375 W. Forrest Park Dr.
Bloomington, IN 47404

Prop. Location: 907 W Kirkwood AVE
Number of Units/Structures: 1/1
Units/Bedrooms/Max # of Occupants: Bld 1: 1/3/3

Date Inspected: 04/18/2017
Primary Heat Source: Gas
Property Zoning: RC
Number of Stories: 1

Inspector: Jo Stong
Foundation Type: Crawl Space
Attic Access: No
Accessory Structure: None

Monroe County Assessor's records indicate this structure was built in 1900.
There were no requirements for emergency egress at the time of construction.

INTERIOR:

Room dimensions are in the file and are not included in this report.

TENANT VIOLATION (the tenant will receive a separate report for these violations)
Entire Unit:
Remove all trash, litter and garbage from the property. Every occupant of a structure or part thereof shall keep that structure or part thereof which the tenant occupies, controls or uses in a clean and sanitary condition. BMC 16.04.060(d)

It is the determination of the code official that poor housekeeping has led to an insect infestation in this structure. The tenant shall take immediate action to exterminate the insects in this unit/structure via an approved process that will not be injurious to human health. After extermination, proper precautions shall be taken to prevent re-infestation. These precautions include but are not limited to keeping the interior of the unit/structure in a clean and sanitary condition. BMC 16.04.090(a) and (e)

General Violation:
The smoke detectors in the house appear to be more than ten years old and the manufacturer will not guarantee them to provide adequate protection. Install a new smoke detector in an approved location. If wall mounted, it shall be located between 6 and 12 inches from the ceiling. If ceiling mounted, it shall be located at least 4 inches from the wall. IC 22-11-18-3.5

Living Room:
See General Violation.

North Bedroom:
See General Violation.
Note: A door leading directly to the exterior serves as the emergency egress for this sleeping room.

Kitchen:
Repair the gas stove to function as intended (burners would not light). BMC 16.04.060(c)

Middle Bedroom:
See General Violation.

Properly repair and sanitize the floor in this room (stained by pets; strong odor of urine). BMC 16.04.060(a)

Repair or replace the damaged window sill. BMC 16.04.060(a)

Replace the damaged closet door. BMC 16.04.060(a)

Existing Egress Window Measurements (double-hung; both sashes removable):
Height: 60 ½ inches
Width: 23 inches
Sill Height: 21 inches
Openable Area: 9.66 sq. ft.

Note: These measurements are for reference only. There is no violation of the emergency egress requirements.

Laundry:
Clothes dryer exhaust shall be exhausted to the exterior of the structure and not recirculated to any space. Properly vent the dryer so that it exhausts to the exterior of the structure. BMC 16.04.060(c)

Rear Bedroom:
Window will be measured at the reinspection (could not access due to trash and debris stacked in the room).

Bath:
No violations noted.

Furnace Closet:
See Other Requirements at the end of the report for required furnace documentation.

EXTERIOR:

Properly install approved exterior vent cover on the laundry exhaust. BMC 16.04.050(a)

Crawlspace:
Not accessible.

OTHER REQUIREMENTS:

Furnace Inspection Documentation
Thoroughly clean and service the furnace, inspect and test shut off valves for proper operation. Documentation from a professional HVAC contractor for this service is acceptable and encouraged. **Servicing shall include a test for carbon monoxide.** Acceptable levels of carbon monoxide are as follows:

Desired level:	0 parts per million (ppm)
Acceptable level in a living space:	9 ppm
Maximum concentration for flue products:	50ppm BMC 16.01.060(f), BMC 16.04.060(b), (c)

Tenants and Owners Rights and Responsibilities Summary
A completed copy of the Tenants and Owners Rights and Responsibilities Summary must be provided to this office or reviewed with the inspector **within 60 days of the date of the inspection or a $25.00 fine will be levied. BMC 16.03.060(c) and BMC 16.10.030(b)**

Inventory & Damages List
The owner or his agent shall contact the tenant and arrange a joint inspection of the premises to occur within ten days of the tenant's occupancy of the rental unit. The owner or his agent and the tenant shall at that time jointly complete an inventory and damage list, and this shall be signed by all parties to the tenancy agreement. Duplicate copies of the inventory and damage list shall be retained by all parties and shall be deemed a part of the tenancy agreement. **A completed copy of the Inventory & Damage List must be provided to the office or reviewed with the inspector within 60 days of the date of the inspection or a $25.00 fine will be levied. BMC 16.03.050(e) and BMC 16.10.030(b)**

When issued, a copy of the new Rental Occupancy Permit shall be posted as required by BMC 16.03.030(d): All rental units shall be required to have a current occupancy permit displayed in an accessible location inside the unit. The permit shall contain the name of the owner and the agent, the occupant load of the unit, the number of bedrooms, the expiration date of the permit, and any variances that have been granted for the property. BMC 16.03.030(c)

Thank you for your cooperation in the Residential Rental Occupancy Permit Program.

This is the end of this report.

4.20.17 JJ

Oster

City of Bloomington
H.A.N.D.

Board of Housing Quality Appeals
Staff Report: Petition for Relief from an Administrative Decision

Meeting Date: July 19, 2017

Petition Type: Relief from an administrative decision

Variance Request: Relief from being required to register as a rental.

Petition Number: 17-AA-112

Address: 1201 W. Green Tree Lane

Petitioner: Peter Jones

Inspector: John Hewett

Staff Report:

This property is currently occupied by the son and daughter-in-law of the owner. The petitioner has requested that he be exempt from registering this property as a rental for as long as the house is occupied by the son and daughter-in-law. The son is a student at Indiana University. They should only be here for 2 more years, then he plans to sell the house.

Staff recommendation: Grant the relief from administrative decision.

Conditions: This unit shall be exempt from the requirement to register as a rental for as long as it is owned by the current owner and is occupied by only the current residents. This property shall be monitored on a yearly basis to verify this occupancy.

Compliance Deadline: none

Attachments: Appeal form

RECEIVED
JUN 21 2017
BY: .....

Application For Appeal
To The
Board of Housing Quality Appeals
P.O. Box 100
Bloomington, IN 47402
812-349-3420
hand@bloomington.in.gov

Property Address: 1201 Green Tree Ln

Petitioner's Name: Peter Jones

Address: 5250 n 50 e

City: New Castle **State:** Indiana **Zip Code:** 47362

Phone Number: 7657170322 **E-mail Address:** pejones55@comcast.net

Owner's Name: Peter Jones

Address: 5250 n 50 e

City: New Castle **State:** Indiana **Zip Code:** 47362

Phone Number: 7657170322 **E-mail Address:** pejones55@comcast.net

Occupants: my son, his spouse & he says someone else is living there to help him with bills

The following conditions must be found in each case in order for the Board to consider the request:

1. That the exception is consistent with the intent and purpose of the housing code and promotes public health, safety, and general welfare.
2. That the value of the area about the property to which the exception is to apply will not be adversely affected.

Identify the variance type that you are requesting from the following drop down menu:

Variance Type: Relief from an administrative decision. (Petition Type: AA)

Reminder:
A $20.00 filing fee must be submitted with the Appeal Application or the application will not be considered to be complete! A completed application has to be submitted prior to the meeting application deadline in order to be placed on that months agenda!

(Will be assigned by BHQA)

Petition Number: 17-AA-112

In the space provided below please write a brief narrative regarding your request. Be specific as to what you are requesting, the reason(s) or justification(s) for your request, the amount of time needed to bring the property into compliance, as well as any modifications and/or alterations you are suggesting. The following information must be included dependent upon the type of variance you are requesting:

A. An extension of time to complete repairs. (Petition type: TV)
   1. Specify the items that need the extension of time to complete.
   2. Explain why the extension is needed.
   3. Specify the time requested.

B. A modification or exception to the Housing Property Maintenance Code. (Petition type: V)
   1. Specify the code reference number you are appealing.
   2. Detail why you are requesting the variance.
   3. Specify the modifications and or alterations you are suggesting.

C. Relief from an administration decision. (Petition type: AA)
   1. Specify the decision being appealed and the relief you are seeking.

D. Rescind a variance. (Petition type: RV)
   1. Detail the existing variance.
   2. Specify the reason the variance is no longer needed.

i bought this house to help out on cost for my son while he attends Indiana University on his way to become a pediatric oncologist. The intentions are to sell the house as soon as he completes his degree and moves on to his internship. There is no intention on my part for this home to become a rental or profitable business investment, only a way to possibly re-coop some of the housing cost when i sell the home after his graduation possibly in 2 years.

Signature (Required): Peter Jones

Name (Print): Peter Jones **Date:** 6/21/17

Important information regarding this application format:
1. This form is designed to be filled out electronically, printed, then returned/submitted manually (e.g. postal mail).
2. This document may be saved on your computer for future use, however, any data that you have entered will not be saved.

Print Form

City of Bloomington
H.A.N.D.

Board of Housing Quality Appeals
Staff Report: Petition for Extension of Time

Meeting Date:	July 19, 2017
Petition Type:	An extension of time to complete repairs
Petition Number:	17-TV-113
Address:	1308 N. Dunn
Petitioner:	Ronnie Hanson
Inspector:	Dee Wills
Staff Report:	April 13, 2017 Completed Cycle Inspection June 23, 2017 Received Application for Appeal The petitioner is requesting an extension of time due to the lack of staff to perform the repairs. The petitioner states that he has had several employees leave recently and needs more time to complete all of the repairs listed in the Cycle Report.
Staff recommendation:	Grant the extension of time.
Conditions:	Complete all repairs and schedule for re-inspection no later than the deadline stated below, or this case will be turned over to the City of Bloomington Legal Department for further action including the possibility of fines.
Compliance Deadline:	Life Safety and Smoke Detector Violations: July 31, 2017 **(Bolded in Report)** All other Violations: September 19, 2017
Attachments:	Application for Appeal, Cycle Report

RECEIVED
JUN 28 2017
BY: EW

Application for Appeal
To The
Board of Housing Quality Appeals
P.O. Box 100
Bloomington, IN 47402
812-349-3420
hand@bloomington.in.gov

Property Address: 1308 N. Dunn

Petitioner's Name: Ronnie Hanson

Address: 7995 S. Fairfax Rd

City: Bloomington State: IN Zip Code: 47401

Phone Number: 812-327-8315 Email Address:

Property Owner's Name: Ronnie Hanson

Address: Same

City: State: Zip Code:

Phone Number: Email Address:

Occupants: 8 units

The following conditions must be found in each case in order for the Board to consider the request:

1. That the exception is consistent with the intent and purpose of the housing code and promotes public health, safety and general welfare.
2. That the value of the area about the property to which the exception is to apply will not be adversely affected.

Please circle the petition type that you are requesting:

A) An extension of time to complete repairs (Petition type TV)

B) A modification or exception to the Residential Rental Unit and Lodging Establishment Inspection Program (Petition type V)

C) Relief from an administrative decision (Petition type AA)

D) Rescind a variance (Petition type RV)

REMINDER: A $20 filing fee must be submitted with this application before the property can be placed on the meeting agenda.

OFFICE USE ONLY
Petition Number 17-TV-113

SEE REVERSE

Please provide details regarding your request below; you may attach any exhibits or additional comments as you deem necessary and pertinent to your request. Be specific as to what you are requesting, the reason or justification for your request; the amount of time needed to bring the property into compliance, and any modifications and/or alterations you are suggesting.

I have Recently Have had several employees to quit work so I am short handed for a while

Signature (required): Ronnie Hanson

Name (please print): Ronnie Hanson Date: 6/23/16

You may attend the meeting. If you attend, please note that all petitioners presenting a matter to the Board shall be limited to no more than five minutes to present their case and arguments. Additional time can be granted if deemed appropriate by the Board. Please note that if your property is listed on the consent agenda it is more likely than not that your property will not be individually discussed during the Board's meeting.

City Of Bloomington
Housing and Neighborhood Development

APR 2 5 2017

RENTAL PERMIT INFORMATION

Hanson, Ronnie F.
7995 S. Fairfax Rd
Bloomington, IN 47401

Property Location: 1308 N Dunn ST

Please find enclosed the Cycle Inspection Report which details recommendations and violations found during the recent inspection of your rental property. You have sixty (60) days from the date of this letter to correct the violations listed on the report.

Once violations have been corrected, it is your responsibility to call the Housing and Neighborhood Development office by JUN 2 4 2017 to schedule a re-inspection. You have the right to appeal any violation to the Board of Housing Quality Appeals. An appeal form can be found at www.bloomington.in.gov/hand. If you do not have access to the internet, you may contact HAND at 812-349-3420 and a form will be provided.

This report is issued in accordance with BMC 16.10.020(a) and 16.10.040(a) of the Residential Rental Unit and Lodging Establishment Inspection Program. Residential Rental Occupancy Permits will not be issued until all interior and exterior violations have been corrected, and all fees have been paid. Please be advised that non-compliance by the deadlines listed in this letter can limit the permit period to a maximum of three (3) years. A copy of the Notice of Fees can be found at www.bloomington.in.gov/hand. If you do not have access to the internet, you may contact HAND at 349-3420 and a form will be provided.

If your address has changed since your last inspection, please submit a new registration form to the HAND Department. You can find the registration form online at the website listed above. If you do not have internet access, you may contact HAND at 812-349-3420 and a form will be mailed.

If you have any questions regarding the permit process, please call weekdays between 8:00 a.m. and 5:00 p.m., at (812) 349-3420.

Sincerely,

Housing & Neighborhood Development
Encl:Inspection Report,

55

City Of Bloomington
Housing and Neighborhood Development

CYCLE INSPECTION REPORT

Owner(s)
Hanson, Ronnie F.
7995 S. Fairfax Rd
Bloomington, IN 47401

Prop. Location: 1308 N Dunn ST
Number of Units/Structures: 8/1
Units/Bedrooms/Max # of Occupants: Bld 1: 8/1/5

Date Inspected: 04/13/2017
Primary Heat Source: Electric
Property Zoning: RH
Number of Stories: 2

Inspector: Dee Wills
Foundation Type: Slab
Attic Access: No
Accessory Structure: None

Monroe County Assessor's records indicate this structure was built in 1960.
There are no minimum requirements for emergency egress at the time of construction.

Existing Egress Window Measurements: (Dbl hung pop-out)

Height: 28.50 inches
Width: 29 inches
Sill Height: 48 inches
Openable Area: 5.73 sq. ft.

Note: These measurements are for reference only. There is no violation of the emergency egress requirements.

Existing Egress Window Measurements: (Sliding)

Height: 33 inches
Width: 14.50 inches
Sill Height: 48 inches
Openable Area: 3.32 sq. ft.

Note: These measurements are for reference only. There is no violation of the emergency egress requirements.

At the time this structure was built, there were no code requirements for emergency egress for a sleeping room. The Housing & Neighborhood Development Department strongly recommends that the sleeping room egress windows be modified or replaced with a larger window to aid in emergency escape.

INTERIOR

Unit 1

Bathroom

Properly repair, then clean and surface coat damaged or stained ceiling area. BMC 16.04.060(a)

Properly repair/replace & secure ceiling tile. BMC 16.04.060(a)

Kitchen (7-6 x 6-0), Living Room (11-0 x 8-0), Bedroom (9-0 x 8-0)

No violations noted.

Unit 2

Kitchen (7-6 x 6-0)

Properly repair, then clean and surface coat damaged or stained ceiling area. BMC 16.04.060(a)

Properly repair/replace & secure ceiling tile. BMC 16.04.060(a)

Replace non-functioning or incorrectly wired GFCI receptacle(s), per Indiana Electric Code requirements. BMC 16.04.020 (IEC 210.8) and BMC 16.04.060(b)

Living Room (11-0 x 8-0)

No violations noted.

Bedroom (9-0 x 8-0)

The window in this room was not inspected at the time of this inspection, as it was not accessible. The window in this room must be inspected and brought into compliance with-in the same 60 day deadline as the remainder of this property. BMC 16.03.040

Bathroom

Properly repair, then clean and surface coat damaged or stained ceiling area. BMC 16.04.060(a)

Properly repair/replace & secure ceiling tile. BMC 16.04.060(a)

Unit 3

Kitchen (7-6 x 6-0)

Properly repair or replace broken or missing cabinet door. BMC 16.04.060(a)

It is strongly recommended that a minimum 1A 10BC classification fire extinguisher be mounted in a visible, accessible location, in or adjacent to the kitchen, away from the range, and in the path of egress.

Living Room (11-0 x 8-0)

Repair or replace existing smoke detector in a manner so that it functions as intended. IC 22-11-18-3.5

Bathroom, Bedroom (9-0 x 8-0)
No violations noted.

Unit 4
Living Room (11-0 x 8-0)
Repair or replace existing smoke detector in a manner so that it functions as intended. IC 22-11-18-3.5

Kitchen (7-6 x 6-0), Bedroom (9-0 x 8-0)
No violations noted.

Bathroom
Clean and service the exhaust fan so that it functions as intended. BMC 16.04.060(c)

Properly install sink in a manner that secures it to the wall and allows it to support normally imposed loads. BMC 16.04.060(a)

Unit 5
Living Room (11-0 x 8-0), Kitchen (7-6 x 6-0), Bathroom
No violations noted.

Bedroom (9-0 x 8-0)
Repair or replace closet doors so they function as intended. BMC 16.04.060(a)

Properly replace the missing entry door so that it functions as intended. BMC 16.04.060(a)

Unit 6
Living Room (11-0 x 8-0)
Repair or replace existing smoke detector in a manner so that it functions as intended. IC 22-11-18-3.5

Bedroom (9-0 x 8-0)
Replace the missing smoke detector. IC22-11-18-3.5

Properly repair/ replace the missing lower sash for the window so that it functions as intended. BMC 16.04.060(b)

Bathroom, Kitchen (7-6 x 6-0),
No violations noted.

Unit 7
Kitchen (7-6 x 6-0), Bathroom, Bedroom (9-0 x 8-0)
No violations noted.

Living Room (11-0 x 8-0)
Repair or replace existing smoke detector in a manner so that it functions as intended. IC 22-11-18-3.5

Unit 8
Living Room (11-0 x 8-0), Bedroom (9-0 x 8-0)
No violations noted.

Kitchen (7-6 x 6-0),
Properly secure the electrical outlet adjacent to the exhaust fan so that it functions as intended. BMC 16.04.060(b)

Bathroom
Clean and service the exhaust fan so that it functions as intended. BMC 16.04.060(c)

Repair/ replace the broken hot water faucet handle. BMC 16.04.060(c)

EXTERIOR:

Remove the couch from the front slab of Units 3 and 4. BMC 16.04.040(f)

Other requirements

Required documentation:
A completed copy of the Tenants and Owners Rights and Responsibilities Summary must be provided to this office or reviewed with the inspector within 60 days of the date of the inspection **or a $25.00 fine will be levied.** BMC 16.12.050 (d) and 16.10.030(b)

Required documentation:
The owner or his agent shall contact the tenant and arrange a joint inspection of the premises to occur within ten days of the tenant's occupancy of the rental unit. The owner or his agent and the tenant shall at that time jointly complete an inventory and damage list, and this shall be signed by all parties to the tenancy agreement. Duplicate copies of the inventory and damage list shall be retained by all parties and shall be deemed a part of the tenancy agreement. **A completed copy of the Inventory & Damage List must be provided to the office or reviewed with the inspector within 60 days of the date of the inspection or a $25.00 fine will be levied.** BMC16.12.040 and 16.10.030(b)

When issued, a copy of the new Rental Occupancy Permit shall be posted as required by BMC: All rental units shall display a current occupancy permit in an accessible location inside said unit. The permit shall contain the name of the owner or his agent and the expiration date of the permit. BMC 16.16.03.030(d)

This is the end of this report.