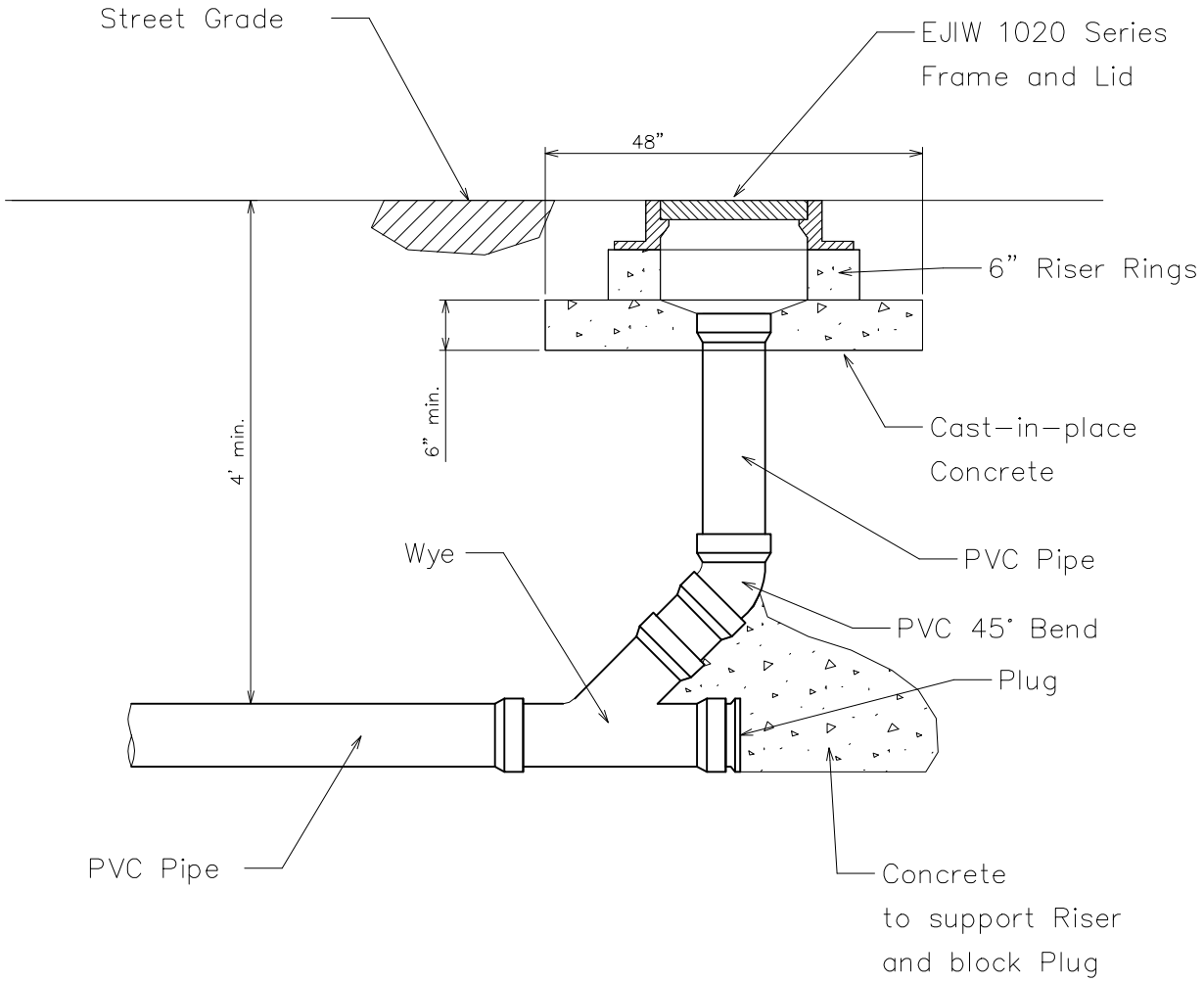


PROFILE

| City of Bloomington Utilities Engineering Department | | STANDARD SANITARY MAIN CLEAN-OUT FOR 8" PIPES AND LARGER | STANDARD DETAIL NUMBER 20 |
|---|---|---|---|
| NO SCALE<br>03/11/03<br>Kai Schnippe | Drawing File:<br>I:\common\Standard Drawings\std20.DGN | | |